UNITED STATES PATENT AND TRADEMARK OFFICE

Commissioner for Patents
United States Patent and Trademark Office
P.O. Box 1450
Alexandria, VA 22313-1450
www.uspto.gov

In re Patent No. 6725629
Issue Date: April 27,2004
Application No. 10121079
Filed: April 12,2002
Attorney Docket No. 4842-96

:

:DECISION GRANTING PETITION
:UNDER 37 CFR 1.378(c)

:

This is a decision on the electronic petition, filed June 16,2008 ,under 37 CFR 1.378(c) to accept the unintentionally delayed payment of the 3.5 year maintenance fee for the above-identified patent.

The petition is GRANTED.

The maintenance fee is accepted, and the above-identified patent reinstated as of June 16,2008 . This decision also constitutes notice that the fee has been accepted. An electronic copy of the petition and this decision has been created as an entry in an Image File Wrapper. Nevertheless, petitioner should print and retain an independent copy

Telephone inquires related to this electronic decision should be directed to the Electronic Business Center at 1-866-217-9197.

Under the Paperwork Reduction Act of 1995, no persons are required to respond to a collection of information unless it displays valid OMB control number.

PETITION TO ACCEPT UNINTENTIONALLY DELAYED PAYMENT OF MAINTENANCE FEE IN AN EXPIRED PATENT (37 CFR 1.378(c))

Patent Number	Issue Date (YYYY-MM-DD)	Application Number	Filing Date (YYYY-MM-DD)	Docket Number (if applicable)
6,725,629	2004-04-27	10/121,079	2002-04-12	4842-96

CAUTION: Maintenance fee (and surcharge, if any) payment must correctly identify: (1) the patent number and (2) the application number of the actual U.S. application leading to issuance of that patent to ensure the fee(s) is/are associated with the correct patent. 37 CFR 1.366(c) and (d).

SMALL ENTITY
☒ Patentee claims, or has previously claimed, small entity status. See 37 CFR 1.27.

LOSS OF ENTITLEMENT TO SMALL ENTITY STATUS
☐ Patentee is no longer entitled to small entity status. See 37 CFR 1.27(g)

NOT Small Entity		Small Entity	
Fee	Code	Fee	Code
○ 3 ½ year	(1551)	◉ 3 ½ year	(2551)
○ 7 ½ year	(1552)	○ 7 ½ year	(2552)
○ 11 ½ year	(1553)	○ 11 ½ year	(2553)

SURCHARGE
The surcharge required by 37 CFR 1.20(i)(2) (Fee Code 1558) must be paid as a condition of accepting unintentionally delayed payment of the maintenance fee.

MAINTENANCE FEE (37 CFR 1.20(e)-(g))
The appropriate maintenance fee must be submitted with this petition.

STATEMENT
THE UNDERSIGNED CERTIFIES THAT THE DELAY IN PAYMENT OF THE MAINTENANCE FEE TO THIS PATENT WAS UNINTENTIONAL

PETITIONER(S) REQUEST THAT THE DELAYED PAYMENT OF THE MAINTENANCE FEE BE ACCEPTED AND THE PATENT REINSTATED

THIS PORTION MUST BE COMPLETED BY THE SIGNATORY OR SIGNATORIES

37 CFR 1.378(d) states: "Any petition under this section must be signed by an attorney or agent registered to practice before the Patent and Trademark Office, or by the patentee, the assignee, or other party in interest."

I certify, in accordance with 37 CFR 1.4(d)(4) that I am

◉ An attorney or agent registered to practice before the Patent and Trademark Office

○ A sole patentee

○ A joint patentee; I certify that I am authorized to sign this submission on behalf of all the other patentees.

○ A joint patentee; all of whom are signing this e-petition

○ The assignee of record of the entire interest

Patent Practitioner			
A signature of the applicant or representative is required in accordance with 37 CFR 1.33 and 10.18. Please see 37 CFR 1.4(d) for the form of the signature			
Signature	/Andrew D. Stover/	Date (YYYY-MM-DD)	2008-06-16
Name	Andrew D. Stover	Registration Number	38629

This collection of information is required by 37 CFR 1.378(c). The information is required to obtain or retain a benefit by the public which is to file (and by the USPTO to process) an application. Confidentiality is governed by 35 U.S.C. 122 and 37 CFR 1.11 and 1.14. This collection is estimated to take 1 hour to complete, including gathering, preparing, and submitting the completed application form to the USPTO. Time will vary depending upon the individual case. Any comments on the amount of time you require to complete this form and/ or suggestions for reducing this burden, should be sent to the Chief Information Officer, U.S. Patent and Trademark Office, U.S. Department of Commerce, P.O. Box 1450, Alexandria, VA 22313-1450. DO NOT SEND FEES OR COMPLETED FORMS TO THIS ADDRESS. **This form can only be used when in conjunction with EFS-Web. If this form is mailed to the USPTO, it may cause delays in reinstating the patent.**

Privacy Act Statement

The Privacy Act of 1974 (P.L. 93-579) requires that you be given certain information in connection with your submission of the attached form related to a patent application or patent. Accordingly, pursuant to the requirements of the Act, please be advised that: (1) the general authority for the collection of this information is 35 U.S.C. 2(b)(2); (2) furnishing of the information solicited is voluntary; and (3) the principal purpose for which the information is used by the U.S. Patent and Trademark Office is to process and/or examine your submission related to a patent application or patent. If you do not furnish the requested information, the U.S. Patent and Trademark Office may not be able to process and/or examine your submission, which may result in termination of proceedings or abandonment of the application or expiration of the patent.

The information provided by you in this form will be subject to the following routine uses:

1. The information on this form will be treated confidentially to the extent allowed under the Freedom of Information Act (5 U.S.C. 552) and the Privacy Act (5 U.S.C. 552a). Records from this system of records may be disclosed to the Department of Justice to determine whether the Freedom of Information Act requires disclosure of these record s.

2. A record from this system of records may be disclosed, as a routine use, in the course of presenting evidence to a court, magistrate, or administrative tribunal, including disclosures to opposing counsel in the course of settlement negotiations.

3. A record in this system of records may be disclosed, as a routine use, to a Member of Congress submitting a request involving an individual, to whom the record pertains, when the individual has requested assistance from the Member with respect to the subject matter of the record.

4. A record in this system of records may be disclosed, as a routine use, to a contractor of the Agency having need for the information in order to perform a contract. Recipients of information shall be required to comply with the requirements of the Privacy Act of 1974, as amended, pursuant to 5 U.S.C. 552a(m).

5. A record related to an International Application filed under the Patent Cooperation Treaty in this system of records may be disclosed, as a routine use, to the International Bureau of the World Intellectual Property Organization, pursuant to the Patent Cooperation Treaty.

6. A record in this system of records may be disclosed, as a routine use, to another federal agency for purposes of National Security review (35 U.S.C. 181) and for review pursuant to the Atomic Energy Act (42 U.S.C. 218(c)).

7. A record from this system of records may be disclosed, as a routine use, to the Administrator, General Services, or his/her designee, during an inspection of records conducted by GSA as part of that agency's responsibility to recommend improvements in records management practices and programs, under authority of 44 U.S.C. 2904 and 2906. Such disclosure shall be made in accordance with the GSA regulations governing inspection of records for this purpose, and any other relevant (i.e., GSA or Commerce) directive. Such disclosure shall not be used to make determinations about individuals.

8. A record from this system of records may be disclosed, as a routine use, to the public after either publication of the application pursuant to 35 U.S.C. 122(b) or issuance of a patent pursuant to 35 U.S.C. 151. Further, a record may be disclosed, subject to the limitations of 37 CFR 1.14, as a routine use, to the public if the record was filed in an application which became abandoned or in which the proceedings were terminated and which application is referenced by either a published application, an application open to public inspections or an issued patent.

9. A record from this system of records may be disclosed, as a routine use, to a Federal, State, or local law enforcement agency, if the USPTO becomes aware of a violation or potential violation of law or regulation.

UNITED STATES PATENT AND TRADEMARK OFFICE

Commissioner for Patents
United States Patent and Trademark Office
P.O. Box 1450
Alexandria, VA 22313-1450
www.uspto.gov

Paper No. 19

RANDALL B. BATEMAN
BATEMAN IP LAW GROUP
8 EAST BROADWAY, SUITE 550
PO BOX 1319
SALT LAKE CITY UT 84110

COPY MAILED

JUL 13 2005

OFFICE OF PETITIONS

In re Application of	:	
Miles et al.	:	
Application No. 10/121,080	:	ON PETITION
Filed: April 12, 2002	:	
Attorney Docket No. 0905.ZEVX.DV2	:	

This is a decision on the petition under 37 C.F.R. § 1.137(b), filed May 13, 2005, to revive the above-identified application.

The petition is **GRANTED.**

Petitioner has met the requirements to revive the above-identified application pursuant to 37 CFR 1.137(b).

The above-identified application is being revived solely for purposes of continuity. As continuity has been established by this decision reviving the above-identified application, the above-identified application is again abandoned in favor of continuing application No. 10/678,698.

The application file is being forwarded to the Files Repository.

Telephone inquiries regarding this decision should be directed to the undersigned at (571) 272-3282.

Liana Chase
Petitions Examiner
Office of Petitions
Office of the Deputy Commissioner
for Patent Examination Policy

UNITED STATES PATENT AND TRADEMARK OFFICE

Commissioner for Patents
United States Patent and Trademark Office
P.O. Box 1450
Alexandria, VA 22313-1450
www.uspto.gov

JOSEPH S. TRIPOLI
THOMSON MULTIMEDIA LICENSING INC.
2 INDEPENDENCE WAY
P.O. BOX 5312
PRINCETON NJ 08543-5312

MAILED

MAR 3 1 2009

OFFICE OF PETITIONS

In re Application of	:	
Shu Lin, et al.	:	
Application No. 10/121,089	:	DECISION ON PETITION
Filed: April 11, 2002	:	
Attorney Docket No. PU020084	:	

This is a decision on the petition under the unintentional provisions of 37 CFR 1.137(b), filed January 6, 2009, to revive the above-identified application.

The petition is **GRANTED**.

This application became abandoned as a result of petitioner's failure to take appropriate action in a timely manner after the decision of September 24, 2008 by the Board of Patent Appeals and Interferences. Therefore, the proceedings as to the rejected claims were terminated. See 37 CFR 1.197(b). As no claim was allowed, the application became abandoned on November 24, 2008. See MPEP 1214.06. The Notice of Abandonment was mailed December 4, 2008.

The petition satisfies the requirements of 37 CFR 1.137(b) in that petitioner has supplied (1) the reply in the form of an RCE and Amendment, (2) the petition fee of $1,620, and (3) a proper statement of unintentional delay.

It is not apparent whether the person signing the statement of unintentional delay was in a position to have firsthand or direct knowledge of the facts and circumstances of the delay at issue. Nevertheless, such statement is being treated as having been made as the result of a reasonable inquiry into the facts and circumstances of such delay. See 37 CFR 10.18(b) and Changes to Patent Practice and Procedure; Final Rule Notice, 62 Fed. Reg. 53131, 53178 (October 10, 1997), 1203 Off. Gaz. Pat. Office 63, 103 (October 21, 1997). In the event that such an inquiry has not been made, petitioner must make such an inquiry. If such inquiry results in the discovery that it is not correct that the entire delay in filing the required reply from the due date for the reply until the filing of a grantable petition pursuant to 37 CFR 1.137(b) was unintentional, petitioner must notify the Office.

Telephone inquiries concerning this decision should be directed to Terri Williams at (571) 272-2991.

This application is being referred to Technology Center AU 2621 for appropriate action by the Examiner in the normal course of business on the reply received

Chris Bottorff
Petitions Examiner
Office of Petitions

UNITED STATES PATENT AND TRADEMARK OFFICE

COMMISSIONER FOR PATENTS
UNITED STATES PATENT AND TRADEMARK OFFICE
P.O. BOX 1450
ALEXANDRIA, VA 22313-1450
www.uspto.gov

Paper No. 7

MAILED

MAR 2 3 2004

Technology Center 2100

Mark M. Takahashi
GRAY CARY WARE &
FREIDENRICH
4365 Executive Drive, Suite 1100
San Diego, CA 92121-2133

In re Application of:
Herman Chien
Application No. 10/121,091
Filed: April 11, 2002
For: METHOD AND APPARATUS FOR MASKING DESTINATION ADDRESSES TO REDUCE TRAFFIC OVER A COMMUNICATION LINK

DECISION ON REQUEST TO WITHDRAW AS ATTORNEY OR AGENT

This is a decision on the Request To Withdraw from Representation filed March 08, 2004.

A grantable request to withdraw as attorney of record should indicate thereon the present mailing addresses of the attorney(s) who is/are withdrawing from the record and of the applicant. The request for withdrawal must be signed by every attorney seeking to withdraw or contain a clear indication that one attorney is signing on behalf of another/others. A request to withdraw will not be approved unless at least 30 (thirty) days would remain between the date of approval and the later of the expiration date of a time to file a response or the expiration date of the maximum time period which can be extended under 37 C.F.R. § 1. 136(a). The effective date of withdrawal being the date of decision and not the date of request. See M.P.E.P. § 402.06. 37 C.F.R. § 1.36 further requires that the applicant or patent owner be notified of the withdrawal of the attorney or agent.

The request filed March 08, 2004 meets all the requirements. Accordingly the request is **GRANTED**.

All future communications from the Office will be directed to the below-listed address until otherwise notified by applicant. This correspondence address is provided by the withdrawn attorney(s). Applicant is reminded of the obligation to promptly notify the Patent and Trademark Office (Office) of any change in correspondence address to ensure receipt of all communications from the Office.

James R. Matthews

for Vincent N. Trans
Special Program Examiner
Technology Center 2100
Computer Architecture, Software, and
Information Security
703-305-9750

cc: Jerald J. Gnuschke
Corporate Counsel
AT&T WIRELESS SERVICES, INC.
P.O. Box 97061
Redmond, WA 98073

UNITED STATES PATENT AND TRADEMARK OFFICE

UNDER SECRETARY OF COMMERCE FOR INTELLECTUAL PROPERTY AND
DIRECTOR OF THE UNITED STATES PATENT AND TRADEMARK OFFICE
WASHINGTON, DC 20231
www.uspto.gov

JUN - 2 2003

MAILED

JUN - 2 2003

OFFICE OF THE DIRECTOR
TC 3600

Neal O. Willmann
9521 Montgomery Road
Cincinnati, OH 45242

Paper No. 3

In re application of
Richard N. Ballard
Application No. 10/121,099
Filed: April 11, 2002
For: ROLLER CAM ASSEMBLY

DECISION ON PETITION TO MAKE SPECIAL (APPLICANT'S AGE)

This is a decision on the petition submitted on May 03, 2003, under 37 CFR 1.102 (c) to make the above-identified application special under the procedure set forth in MPEP 708.02, Section IV: Applicant's Age.

The petition is **GRANTED**.

An application may be accorded special status upon the filing of a petition providing evidence showing that the applicant is at least 65 years old. Such a showing may be provided by evidence such as a birth certificate or a statement from the applicant.

The evidence is submitted with the inventor's statement that he is at least 65 years of age.

The examiner is directed (1) to make an interference search for possible interfering applications, (2) to promptly examine this application out of turn, and (3) if any interfering application is discovered, to examine such application simultaneously and state in the first official letter of such application that it is being taken out of turn because of a possible interference.

Petitioner is advised that this application will continue to be special, throughout its entire prosecution and pendency, including interference or appeal, if any, only if petitioner makes a prompt ***bona fide*** effort, in response to each Office action, to place the application in condition for allowance, even if it is necessary to conduct an interview with the examiner to accomplish this purpose.

SUMMARY: Petition to Make Special **GRANTED**.

Steven N. Meyers
Special Programs Examiner
Technology Center 3600
(703) 308-3868
(703) 605-0586

SNM/dxn: 5/28/03

UNITED STATES PATENT AND TRADEMARK OFFICE

Commissioner for Patents
United States Patent and Trademark Office
P.O. Box 1450
Alexandria, VA 22313-1450
www.uspto.gov

QUARLES & BRADY LLP
411 E. WISCONSIN AVENUE
SUITE 2040
MILWAUKEE WI 53202-4497

COPY MAILED

NOV 19 2004

OFFICE OF PETITIONS

In re Application of
Bergeron, et al.
Application No. 10/121,120
Filed: April 11, 2002
Attorney Docket No. 850586.90012
For: SPECIFIC AND UNIVERSAL PROBES AND AMPLIFICATION PRIMERS TO RAPIDLY DETECT AND IDENTIFY COMMON BACTERIAL PATHOGENS AND ANTIBIOTIC RESISTANCE GENES FROM CLINICAL SPECIMENS FOR ROUTINE DIAGNOSIS IN MICROBIOLOGY LABORATORIES

: DECISION ON PETITION
: UNDER 37 CFR 1.78(a)(3)

This is a decision on the petition under 37 CFR 1.78(a)(3), filed August 2, 2004 (certificate of mailing date July 27, 2004), to accept an unintentionally delayed claim under 35 U.S.C. § 120 for the benefit of priority to the prior-filed nonprovisional applications set forth in the amendment filed concurrently with the instant petition. The prior-filed nonprovisional applications are application nos. 08/526,840 and 08/304,732.[1]

The petition is **GRANTED**.

A petition for acceptance of a claim for late priority under 37 CFR 1.78(a)(3) is only applicable

[1] Regarding application no. 09/452,599, the current procedure where a claim for priority under 37 CFR § 1.78(a)(3) is not included in the first sentence of the specification or in an ADS but does appear either in the oath or declaration or a transmittal letter filed with the application and the Office notes the claim for priority, no petition will be required to accept a late claim for priority. This is because the application would have been scheduled for publication on the basis of the information concerning the claim submitted elsewhere in the application within the time period set forth in 37 CFR § 1.78(a)(2)(ii). In the instant case, the Office noted the claim for priority of application no. 09/452,599 in the transmittal letter filed with the application, as shown by its inclusion on the filing receipt. Therefore, a petition under 37 CFR §1.78(a)(3) for application no. 09/452,599 is not required. However, the benefit claim to application no. 09/452,599 in the manner specified in 37 CFR 1.78(a)(2)(i) and (a)(2)(iii) (i.e. by an amendment in the first sentence of the specification following the title or in an ADS) is properly submitted and accepted. See MPEP 201.11.

to those applications filed on or after November 29, 2000. Further, the petition is appropriate only after the expiration of the period specified in 37 CFR 1.78(a)(2)(ii). In addition, the petition under 37 CFR 1.78(a)(3) must be accompanied by:

(1) the reference required by 35 U.S.C. § 120 and 37 CFR 1.78(a)(2)(i) of the prior-filed application, unless previously submitted;

(2) the surcharge set forth in § 1.17(t); and

(3) a statement that the entire delay between the date the claim was due under 37 CFR 1.78(a)(2)(ii) and the date the claim was filed was unintentional. The Commissioner may require additional information where there is a question whether the delay was unintentional.

The instant pending application was filed on April 11, 2002, and was pending at the time of filing of the instant petition. A reference to the prior-filed nonprovisional applications has been included in an amendment to the first sentence of the specification following the title, as required by 37 CFR 1.78(a)(2)(iii).

The instant nonprovisional application was filed after November 29, 2000, and the claim herein for the benefit of priority to the prior-filed nonprovisional applications is submitted after expiration of the period specified in 37 CFR 1.78(a)(2)(ii). Also, the reference to the prior-filed nonprovisional applications was submitted during the pendency of the instant nonprovisional application, for which the claim for benefit of priority is sought. *See* 35 U.S.C. § 120. Accordingly, having found that the instant petition for acceptance of an unintentionally delayed claim for the benefit of priority under 35 U.S.C. § 120 to the prior-filed nonprovisional applications satisfies the conditions of 37 CFR 1.78(a)(3), the petition is granted.

The granting of the petition to accept the delayed benefit claim to the prior-filed applications under 37 CFR 1.78(a)(3) should not be construed as meaning that the instant application is entitled to the benefit of the prior-filed applications. In order for the instant application to be entitled to the benefit of the prior-filed applications, all other requirements under 35 U.S.C. § 120 and 37 CFR 1.78(a)(1) and (a)(2) must be met. Similarly, the fact that the corrected Filing Receipt accompanying this decision on petition includes the prior-filed applications should not be construed as meaning that applicant is entitled to the claim for benefit of priority to the prior-filed applications noted thereon. Accordingly, the examiner will, in due course, consider this benefit claim and determine whether the instant application is entitled to the benefit of the earlier filing date.

A corrected Filing Receipt, which includes the priority claim to the prior-filed nonprovisional applications, accompanies this decision on petition.

Any inquiries concerning this decision may be directed to Petitions Attorney E. Shirene Willis at (571) 272-3230.

This application is being forwarded to Technology Center Art Unit 1634 for appropriate action on the amendment filed August 2, 2004 (certificate of mailing date July 27, 2004), including consideration by the examiner of applicant's entitlement to claim benefit of priority under 35 U.S.C. § 120 to the prior-filed nonprovisional applications.

Charles Pearson
Director, Office of Petitions
Office of Petitions
Office of the Deputy Commissioner
for Patent Examination Policy

ATTACHMENT: Corrected Filing Receipt

UNITED STATES PATENT AND TRADEMARK OFFICE

Commissioner for Patents
United States Patent and Trademark Office
P.O. Box 1450
Alexandria, VA 22313-1450
www.uspto.gov

QUARLES & BRADY
411 E. WISCONSIN AVENUE
SUITE 2040
MILWAUKEE, WI 53202-4497

COPY MAILED

FEB 11 2005

OFFICE OF PETITIONS

In re Application of	:	
Michel G. Bergeron et al	:	
Application No. 10/121,120	:	NOTICE
Filed: April 11, 2002	:	
Attorney Docket No. 850586.90012	:	

This is a notice regarding your request for acceptance of a fee deficiency submission under 37 CFR 1.28. On September 1, 1998, the Court of Appeals for the Federal Circuit held that 37 CFR 1.28(c) is the sole provision governing the time for correction of the erroneous payment of the issue fee as a small entity. **See DH Technology v. Synergystex International, Inc. 154 F.3d 1333, 47 USPQ2d 1865 (Fed. Cir. Sept. 1, 1998).**

The Office no longer investigates or rejects original or reissue applications under 37 CFR 1.56. **1098 Off. Gaz. Pat. Office 502 (January 3, 1989)**. Therefore, nothing in this Notice is intended to imply that an investigation was done.

Your fee deficiency submission under 37 CFR 1.28 is hereby **ACCEPTED**.

Inquiries related to this communication should be directed to the Office of Petitions Staff at (703) 305-9285.

This matter is being referred to Technology Center AU 1637.

Wan Laymon
Petitions Examiner
Office of Petitions
Office of the Deputy Commissioner
for Patent Examination Policy

UNITED STATES PATENT AND TRADEMARK OFFICE

Commissioner for Patents
United States Patent and Trademark Office
P. O. Box 1450
Alexandria, VA 22313-1450
www.uspto.gov

Paper No. [illegible]

Webb Ziesenheim Logsdon Orkin & Hanson
700 Koppers Building
436 Seventh Avenue
Pittsburgh, PA 15219-1818

COPY MAILED

AUG 1 8 [illegible]

OFFICE OF PETITIONS

In re Application of	:
William H. Howland	:
Application No. 13/121,139	: DECISION GRANTING PETITION
Filed: April 11, 2002	: UNDER 37 CFR 1.137(b)
Attorney Docket No. 1860-020366	:

This is a decision on the petition under 37 CFR 1.137(f), filed June 30, 2003, which is being treated as a petition under 37 CFR 1.137(b) to revive the instant nonprovisional application for failure to timely notify the U.S. Patent and Trademark (USPTO) of the filing of an application in a foreign country, or under a multinational treaty that requires publication of applications eighteen months after filing. *See* 37 CFR 1.137(f).

The petition is <u>GRANTED</u>.

Petitioner states that the instant nonprovisional application is the subject of an application filed in an eighteen month publication country on April 7, 2003. However, the USPTO was unintentionally not notified of this filing within 45 days subsequent to the filing of the subject application in an eighteen month publication country.

In view of the above, this application became abandoned pursuant to 35 U.S.C. § 122(b)(2)(B)(iii) and 37 CFR 1.213(c) for failure to timely notify the Office of the filing of an application in a foreign country or under a multilateral international agreement that requires publication of applications 18 months after filing.

A petition to revive an application abandoned pursuant to 35 U.S.C. 122(b)(2)(B)(iii) for failure to notify the USPTO of a foreign filing must be accompanied by:

(1) the required reply which is met by the notification of such filing in a foreign country or under a multinational treaty;

2. the petition fee as set forth in 37 CFR 1.17(m); and
3. a statement that the entire delay in filing the required reply from the due date of the reply until the filing of a grantable petition was unintentional.

The instant petition has been found to be in compliance with 37 CFR 1.137(b). Accordingly, the failure to timely notify the USPTO of a foreign or international filing within 45 days after the date of filing of such foreign or international application as provided by 35 U.S.C. § 122(b)(2)(B)(iii) and 37 CFR 1.213(c) is accepted as having been unintentionally delayed.

The previous Request and Certification under 35 U.S.C. § 122(b)(2)(B)(i) has been rescinded. A Notice Regarding Rescission of Nonpublication Request which sets forth the projected publication date of November 13, 2003 accompanies this decision on petition.

Any inquiries concerning this decision may be directed to Latrice Bond at (703) 308-6911.

This application is being forwarded to Technology Center Art Unit 2829 for examination in due course.

Latrice Bond
Paralegal Specialist
Office of Petitions
Office of the Deputy Commissioner
for Patent Examination Policy

Frances Hicks
Lead Petitions Examiner

ATTACHMENT: Notice Regarding Rescission of Nonpublication Request

UNITED STATES PATENT AND TRADEMARK OFFICE

Commissioner for Patents
United States Patent and Trademark Office
P.O. Box 1450
Alexandria, VA 22313-1450
www.uspto.gov

WOLF GREENFIELD & SACKS, PC
FEDERAL RESERVE PLAZA
600 ATLANTIC AVENUE
BOSTON, MA 02210-2211

COPY MAILED

NOV 0 5 2004

OFFICE OF PETITIONS

In re Application of
Liang et al.
Patent No. 6,758,954
Application No. 10/121,133
Filed: April 11, 2002
Issued: July 6, 2004
Attorney Docket No. 100168/70066 PCL/LEW

ON PETITION

This is a decision on the petition under 37 C.F.R. § 1.183, filed July 26, 2004, to waive the rules and accept the correction of the assignee data on the front page of the above-identified patent. The petition is also being treated as a request under 37 CFR 3.81 to accept the correction of the assignee data.

The petition under 37 CFR 1.183 is **DISMISSED AS MOOT.**

The request under 37 CFR 3.81 is **GRANTED**.

Effective June 25, 2004, 37 CFR 3.81(b) has been revised to no longer require the correction of the assignee data prior to issuance of the patent. Therefore, a petition to waive the rule is unnecessary. 37 CFR 3.81(b) currently states:

> Any request for issuance of an application in the name of the assignee submitted after the date of payment of the issue fee, and any request for a patent to be corrected to state the name of the assignee, must state that the assignment was submitted for recordation as set forth in § 3.11 before issuance of the patent, and must include a request for a certificate of correction under § 1.323 of this chapter (accompanied by the fee set forth in § 1.20(a)) and the processing fee set forth in § 1.17(i) of this chapter.

In other words, the request under 37 CFR 3.81(b) will be granted when:

(1) a request under 37 CFR 3.81 and the fee set forth in 37 CFR 1.17(i) are filed,
(2) the assignment was submitted for recordation prior to issuance of the patent, and
(3) a request for a certificate of correction and the fee set forth in 37 CFR 1.20(a) are submitted.

Petitioner has met the requirements set forth above. Therefore, the request is granted.

This matter is being referred to the Certificates of Correction Branch for issuance of the requested Certificate of Correction.

Telephone inquiries should be directed to Paralegal Liana Chase at (571) 272-3282.

Charles Steven Brantley
Petitions Attorney
Office of Petitions

UNITED STATES PATENT AND TRADEMARK OFFICE

Commissioner for Patents
United States Patent and Trademark Office
P.O. Box 1450
Alexandria, VA 22313-1450
www.uspto.gov

JUN - 1 2006

BOZICEVIC, FIELD & FRANCIS, LLP
1900 UNIVERSITY AVENUE
SUITE 200
EAST PALO ALTO, CA 94303

In re Application of	:
David R. Fitzpatrick et al	: PETITION DECISION
Serial No.: 10/121,148	:
Filed: April 10, 2002	:
Attorney Docket No.: IMNX-002CIP	

This is in response to the petition under 37 CFR 1.181, filed March 3, 2006, to reverse the examiner's decision not to consider an affidavit timely submitted..

BACKGROUND

A review of the file history shows that the examiner mailed a first Office action to applicants on March 15, 2005, setting a three month shortened statutory period for reply. The Office action set forth rejections of claims 15-28, claims 1-14 and 29-37 having been withdrawn following election pursuant to a restriction requirement. Claims 15-28 were rejected under 35 U.S.C. 112, second paragraph, as indefinite. Claims 15-20 and 26 were rejected under 35 U.S.C. 102(b) as anticipated by Lespagnard et al. Claim 27 was rejected under 35 U.S.C. 102(b) as anticipated by Lespagnard et al as evidenced by London et al. Claims 15-28 were also rejected under 35 U.S.C. 103(a) as unpatentable over WO 00/28000 in view of Paglia et al

Applicants timely filed a reply on April 11, 2005, amending claims 15, 18 and 20 and replying to all of the rejections. In responding applicants also relied on supporting teachings or exhibits with respect to the references applied in the rejections, such as Naquet et al, Glimcher et al, etc. As such, these references were considered by applicants as documents which provided further explanation of teachings relied on by the examiner in the rejections and to give better understanding to terms and concepts used in the claims and specification and references. They were not cited in an IDS and no citation of references (Form 1449) was provided.

The examiner mailed a Final Office action to applicants on June 17, 2005, setting a three month shortened statutory period for reply. The examiner withdrew the rejection under 35 U.S.C. 112, second paragraph. The examiner maintained the rejection of claims 15-20 and 26 as anticipated by Lespagnard et al for essentially the same reasons and replied to applicants' arguments. The examiner explicitly stated that the additional references were not considered as they were not

submitted in the proper format. (of an IDS). The rejection of claim 27 as anticipated by Lespagnard et al as evidenced by London et al was also maintained as was the rejection of claims 15-28 as unpatentable over WO 00/28000 in view of Paglia et al. Applicants' arguments were fully responded to in each instance.

Applicants filed an amendment under 37 CFR 1.116 on November 17, 2005, again traversing the rejections of record and supplying, in addition, an affidavit by the inventor as to errors in the examiners statements and reasoning. The affidavit was referenced in response to each of the rejections. A Notice of Appeal was filed concurrently.

The examiner mailed an Advisory Action to applicants on January 27, 2006, stating that the affidavit was not considered as it was filed after the date of the Notice of Appeal. No other explanation is given.

DISCUSSION

Applicants' petition seeks reversal of the examiner's decision of non-entry of the affidavit as well as consideration of those teaching references provided in the reply to the first Office action.

Applicants first note and argue that the Advisory action is incorrect in stating that the affidavit was submitted after the filing of a Notice of Appeal. It is agreed that applicants' statement that the affidavit was submitted concurrently with the reply under 37 CFR 1.116 and the Notice of Appeal is correct. In such instances the affidavit is considered to have been timely submitted before the filing of the Notice of Appeal, not after, and must be addressed by the examiner. (See M.P.E.P. 716.01) While the examiner may find consideration of the affidavit inappropriate for other reasons, the reasons for such finding must be given. Such has not been done here.

Applicants further request that the documents submitted with the reply to the first Office action also be considered. Applicants submit that such documents are not prior art, per se, but are exhibits to illustrate the teachings of the prior art already of record. As such they may be submitted without listing on an IDS. Note specifically M.P.E.P. 609.05(c). Insofar as these references are exhibits providing insight and elucidation relevant to the teachings of the references applied, they should be considered by the examiner. The examiner may also require that they be listed on a Form 1449 for completeness of the record.

DECISION

The petition is **GRANTED**.

The application will be forwarded to the examiner for consideration of the teaching exhibits or references provided in applicants' first response. The examiner will also consider the affidavit as to whether it should be entered or not – i.e. is there good and sufficient reasoning shown as to why it could not have been presented earlier – and, if entered, what effect it has on the rejections of record. Such will be communicated to applicants to assist them in preparation of an Appeal Brief, if needed.

Should there be any questions about this decision please contact William R. Dixon, Jr., by letter addressed to Director, TC 1600, at the address listed above, or by telephone at 571-272-0519 or by facsimile sent to the general Office facsimile number, 571-273-8300.

John L. LeGuyader
Director, Technology Center 1600

UNITED STATES PATENT AND TRADEMARK OFFICE

Commissioner for Patents
United States Patent and Trademark Office
Washington, D.C. 20231
www.uspto.gov

Paper No. 7

Weingarten, Schurgin, Gagnebin
& Lebovici LLP
Ten Post Office Square
Boston, MA 02109

COPY MAILED

JAN 14 2003

OFFICE OF PETITIONS

In re Application of	:	
Chuckson Yokota, et al.	:	
Application No. 10/121,152	:	ON PETITION
Filed: April 11, 2002	:	
Attorney Docket No. PRI-155XX	:	

This is in response to the Petition under 37 CFR 1.47(a), filed November 25, 2002.

The petition is granted.

Petitioner has shown that the non-signing inventor has refused to join in the filing of the above-identified application.

The above-identified application and papers have been reviewed and found in compliance with 37 CFR 1.47(a). This application is hereby accorded Rule 1.47(a) status.

As provided in 37 CFR 1.47(a), this Office will forward notice of this application's filing to the non-signing inventor at the address given in the petition. Notice of the filing of this application will also be published in the Official Gazette.

The application file is being forwarded to Technology Center 3613.

Telephone inquiries regarding this decision should be directed to Marianne Morgan at (703) 306-3475.

Frances Hicks

Frances M. Hicks
Petitions Examiner
Office of Petitions
Office of the Deputy Commissioner
for Patent Examination Policy

UNITED STATES PATENT AND TRADEMARK OFFICE

Commissioner for Patents
United States Patent and Trademark Office
P.O. Box 1450
Alexandria, VA 22313-1450
www.uspto.gov

JULIE POST
H.B FULLER COMPANY
1200 WILLOW LAKE BLVD.
P.O. BOX 64683
ST. PAUL MN 55164-0683

COPY MAILED

FEB 22 2005

OFFICE OF PETITIONS

In re Application of
Stewart C. Anderson
Application No. 10/121,171
Filed: April 11, 2002
Attorney Docket No. DA-028-US-01

: DECISION GRANTING PETITION
: TO RESET PERIOD FOR REPLY

This is a decision on the petition, under 37 CFR 1.182, filed November 29, 2004, requesting that the fee for the extension of time, filed with the response to the non-Final Office Action, be refunded. This petition is treated a petition to reset the period for reply.

The petition is **GRANTED**.

A non-Final Office Action was mailed July 29, 2004. Petitioner claims to not have received the Office communication until November 1, 2004. The petition for extension of time and the response to the Office of Communication were filed within one month of receipt of the Office Communication.

Petitioner argues that the post mark on the outter envelope from the USPTO was October 27, 2004 and that the postmark on the inner envelope containing the Office Communication was July 29, 2004 however, it appears that the mail was returned to the USPTO as undeliverable.

A review of the file reveals that the Office Communication in question was in fact returned to the USPTO on September 10, 2004. Further there is no evidence that the Office Communication was mailed to any address other than the address of record but still the mail was returned. It appears that the USPTO remailed the Office communication but did not reset the period for reply and that a substantial portion of the set reply period had elapsed on the date of receipt.

In view of the above, the period for reply should have been reset to January 27, 2005. Therefore, the response filed November 29, 2004 should have been accepted as timely filed, but without the need for an extension of time.

Accordingly the period for reply that was originally set forth in the Office communication original mailed on July 29, 2004, is hereby reset to run from the remail date of October 27, 2004. As such, the extension of time request is deemed unnecessary and the fee paid will be refunded to deposit account 06-2241. Likewise, no petition fee is due and none will be charged.

This matter is being referred to Technology Center 1771 for further examination in due course and for consideration of the amendment filed November 29, 2004.

Telephone inquiries specific to this matter should be directed to the undersigned Petitions Attorney at (571) 272-3212.

Patricia Faison-Ball

Patricia Faison-Ball
Senior Petitions Attorney
Office of Petitions

UNITED STATES PATENT AND TRADEMARK OFFICE

Commissioner for Patents
United States Patent and Trademark Office
P.O. Box 1450
Alexandria, VA 22313-1450
www.uspto.gov

MERCHANT AND GOULD PC
P.O. BOX 2903
MINNEAPOLIS, MN 55402-0903

COPY MAILED

JUN 15 2007

OFFICE OF PETITIONS

In re Application of	:	
Michael E. BESSE, et al	:	
Application No. 10/121,175	:	DECISION ON PETITION
Filed: April 11, 2002	:	TO WITHDRAW
Attorney Docket No. 163.1472US01	:	FROM RECORD

This is a decision on the Request to Withdraw as attorney or agent of record under 37 C.F.R. § 1.36(b), filed January 22, 2007.

The request is **APPROVED**.

A grantable request to withdraw as attorney/agent of record must be signed by every attorney/agent seeking to withdraw or contain a clear indication that one attorney is signing on behalf of another/others. A request to withdraw will not be approved unless at least 30 (thirty) days would remain between the date of approval and the later of the expiration date of a time to file a response or the expiration date of the maximum time period which can be extended under 37 C.F.R. § 1.136(a).

Sarah M. Monfeldt has been withdrawn as attorney of record; all other attorneys remain of record.

The correspondence address of record remains unchanged.

There are no pending Office actions at the present time.

Telephone inquiries concerning this decision should be directed to Diane Goodwyn at 571-272-6735.

April Wise
Petitions Examiner
Office of Petitions

UNITED STATES PATENT AND TRADEMARK OFFICE

Commissioner for Patents
United States Patent and Trademark Office
P.O. Box 1450
Alexandria, VA 22313-1450
www.uspto.gov

Robert Groover, III
11330 Valley Dale Drive
Dallas, TX 75230

COPY MAILED
AUG 1 0 2004
OFFICE OF PETITIONS

In re Application of	:	
Dong-Gyun Kim	:	
Application No. 10/121,184	:	ON PETITION
Filed: April 12, 2002	:	
Attorney Docket No. 784-45	:	

This is a decision on the petition under 37 CFR 1.137(b), filed June 7, 2004, to revive the above-identified application.

The above-identified application became abandoned for failure to reply in a timely manner to the non-final Office action mailed October 27, 2003, which set a shortened statutory period for reply of three (3) months. No extensions of time under the provisions of 37 CFR 1.136(a) were obtained. Accordingly, the above-identified application became abandoned after midnight January 27, 2004.

In response, petitioner submitted with the instant petition $665 for the petition to revive fee, and an amendment.

The petition is **GRANTED**.

The application file is being forwarded to Technology Center Art Unit 2876, for further review of the amendment filed with the instant petition.

Telephone inquiries concerning this decision should be directed to the undersigned at (703) 308-6711.

Andrea Smith
Petitions Examiner
Office of Petitions
Office of the Deputy Commissioner
for Patent Examination Policy

UNITED STATES PATENT AND TRADEMARK OFFICE

Commissioner for Patents
United States Patent and Trademark Office
P.O. Box 1450
Alexandria, VA 22313-1450
www.uspto.gov

Paper No. 081904

ROBERT GROOVER III
GROOVER & HOLMES
BOX 802889
DALLAS, TX 75380-2889

OCT 1 2004

In re Application of:
DONG-GYUN KIM *et al.*
Serial No.: 10/121,184
Filed: April 12, 2002
Attorney Docket No.: **FLT-006US**

DECISION ON REQUEST TO WITHDRAW FROM RECORD

This is a decision on the request to withdraw as attorney/agent of record under 37 C.F.R. § 1.36, filed March 22, 2004.

A grantable request to withdraw as attorney of record must be signed by every attorney seeking to withdraw or contain a clear indication that one attorney is signing on behalf of others. A request to withdraw will not be approved unless at least thirty (30) days would remain between the date of approval and the later of the expiration date of a time to file a response or the expiration date of the maximum time period, which can be extended under 37 C.F.R. § 1.136(a).

The request meets all the above stated requirements. The request was signed by Robert Groover, on behalf of himself and all the attorneys/agents of record. There is no outstanding Office action at this time.

The request is **APPROVED**.

There are no attorneys/agents of record at this time.

Please note, the power of attorney submitted by Robert Groover on June 30, 2004 is improper. A signed power of attorney is needed for processing.

All future communications from the Office will be directed Haynes Morris, at the below address, until otherwise notified by applicant.

Inquiries related to this decision should be directed to Edward Westin at (571) 272-1638.

Edward Westin

Edward Westin, Special Programs Examiner
Technology Center 2800
Semiconductors, Electrical and Optical
Systems and Components

cc: FL TECHNOLOGIES
ATTN: HAYNES MORRIS
300 CREASCENT COURT, SUITE 850
DALLAS, TX 75201

UNITED STATES PATENT AND TRADEMARK OFFICE

Commissioner for Patents
United States Patent and Trademark Office
P.O. Box 1450
Alexandria, VA 22313-1450
www.uspto.gov

CAPITOL PATENT & TRADEMARK LAW FIRM, PLLC
ATTN: JOHN CURTIN
P.O. BOX 1995
VIENNA, VA 22183

COPY MAILED

APR 2 7 2007

OFFICE OF PETITIONS

In re Application of	:	
Victoria Fineberg	:	
Application No. 10/121188	:	
Filing or 371(c) Date: 04/12/2002	:	
Attorney Docket Number:	:	
FINEBERG 1 (LUCE028)	:	ON PETITION

This is a decision on the "Petition to Withdraw Holding of Abandonment Under 37 C.F.R. 1.181(a) et seq.," filed February 1, 2007.

This Petition is hereby **granted**.

The above-identified application became abandoned for failure to timely and properly reply to the non-final Office action, mailed September 21, 2005. The Office action set a three (3) month period for reply. No response having been received, the application became abandoned on December 22, 2005. A Notice of Abandonment was mailed September 5, 2006.

With the instant petition, Applicant has demonstrated non-receipt of the Notice by a preponderance of the evidence[1]. The Revocation of Power of Attorney, Substitute Power of Attorney and Change of Correspondence Address have been entered and made of record.

In view of the foregoing, the petition is granted. The holding of abandonment is hereby withdrawn.

No petition fee has been charged and none is due.

The application will be referred to Technology Center Art Unit 2137 for re-mailing of the Office action.

[1] Applicant filed a copy of a change of correspondence address and a copy of a return-receipt postcard acknowledging receipt by this Office of a change of address in the above-identified application on November 14, 2003. The change of correspondence was not entered in the above-identified application until receipt of the present petition.

Telephone inquiries concerning this matter should be directed to the undersigned at (571) 272-3232.

Derek L. Woods
Attorney
Office of Petitions

UNITED STATES PATENT AND TRADEMARK OFFICE

Commissioner for Patents
United States Patent and Trademark Office
P.O. Box 1450
Alexandria, VA 22313-1450
www.uspto.gov

Richard C. Hsu
Townsend and Townsend and Crew, LLP
Two Embarcadero Center
Eighth Floor
San Francisco, CA 94111-3834

MAILED

MAY 3 1 2005

Technology Center 2100

In re Application of:
Meggers et al.
Application No. 10/121, 204
Filed: January 11, 2002
For: WEAK DATA VERIFICATION FOR LOW PROCESSING POWER DEVICES

DECISION ON REQUEST TO WITHDRAW AS ATTORNEY OR AGENT

This is a decision on the Request To Withdraw from Representation filed November 22, 2004.

A grantable request to withdraw as attorney of record should indicate thereon the present mailing addresses of the attorney(s) who is/are withdrawing from the record and of the applicant. The request for withdrawal must be signed by every attorney seeking to withdraw or contain a clear indication that one attorney is signing on behalf of another/others. A request to withdraw will not be approved unless at least 30 (thirty) days would remain between the date of approval and the later of the expiration date of a time to file a response or the expiration date of the maximum time period which can be extended under 37 C.F.R. § 1. 136(a). The effective date of withdrawal being the date of decision and not the date of request. See M.P.E.P. § 402.06. 37 C.F.R. § 1.36 further requires that the applicant or patent owner be notified of the withdrawal of the attorney or agent.

The request is **GRANTED**.

All future communications from the Office will be directed to the below-listed address until otherwise notified by applicant. This correspondence address is provided by the withdrawn attorney(s). Applicant is reminded of the obligation to promptly notify the Patent and Trademark Office (Office) of any change in correspondence address to ensure receipt of all communications from the Office.

Michelle R. Eason for

Vincent N. Trans
Special Program Examiner
Technology Center 2100

cc: William E. Mitchell, CEO
FIREPAD, INC.
3187 – D Airway Avenue
Costa Mesa, CA 92626

UNITED STATES PATENT AND TRADEMARK OFFICE

Commissioner for Patents
United States Patent and Trademark Office
P.O. Box 1450
Alexandria, VA 22313-1450
www.uspto.gov

HELLER EHRMAN LLP
275 MIDDLEFIELD RD
MENLO PARK CA 94025-3506

COPY MAILED

NOV 25 2005

OFFICE OF PETITIONS

In re	: DECISION REGARDING
Wells, et al.	: PATENT TERM ADJUSTMENT
Application No. 10/121,216	:
Filed: April 10, 2002	:
Attorney Docket No. 39750-0012A	:
	:

This is a decision on the "REQUEST FOR RECONSIDERATION OF PATENT TERM ADJUSTMENT UNDER 37 C.F.R. § 1.705(b)", filed August 30, 2005. Applicants request that the initial determination of patent term adjustment under 35 U.S.C. 154(b) be corrected from zero (0) days to three hundred fifty-five (355) days.

The application for patent term adjustment is **DISMISSED**.

The Office has updated the PAIR screen to reflect that the correct Patent Term Adjustment (PTA) determination at the time of the mailing of the Notice of Allowance is **zero (0) days** (452 days of PTO delay and 647 days of applicant delay). A copy of the updated PAIR screen, showing the correct determination, is enclosed.

On August 10, 2005, the Office mailed the Determination of Patent Term Adjustment under 35 U.S.C. 154(b) in the above-identified application. The Notice stated that the patent term adjustment

(PTA) to date is zero (0) days. On August 30, 2005, applicants timely[1] submitted the instant application for patent term adjustment, asserting that the correct number of days of PTA at the time of the mailing of the Notice of Allowance is three hundred fifty-five (355) days. Applicants fail to state whether the patent issuing from the application is subject to a terminal disclaimer.

Applicants assert entitlement to a patent term adjustment of three hundred fifty-five (355) days on the basis that the PTO improperly assessed applicants a delay of three hundred ninety-eight (398) days for responding to an Office action mailed on May 15, 2003. Applicants assert that they filed a response on June 16, 2003, not on September 16, 2004.

The Office initially determined a patent term adjustment of zero (0) days based on an adjustment for PTO delay of zero (0), reduced by Applicants' delays of three hundred ninety-eight (398) and ninety-seven (97) days pursuant to 35 U.S.C. 154(b)(2)(C)(ii) and 37 C.F.R. §1.704(b), and ninety-two (92) days pursuant to 35 U.S.C. 154(b)(2)(C)(ii) and 37 C.F.R. §1.704(c)(8). The adjustments of 398 and 92 days are at issue.

The adjustment of 398 days has been found to be incorrect. A review of the application file reveals that when applicants filed a copy of their response on September 16, 2004, they included a postcard receipt itemizing a "Response to Restriction Requirement", and bearing a USPTO date stamp of June 16, 2003. A postcard receipt which itemizes and properly identifies the items which are being filed serves as prima facie evidence of receipt in the USPTO of all the items listed thereon on the date stamped thereon by the USPTO.[2] Accordingly, it is concluded that Applicants timely filed a reply in response to the May 15, 2003 Office action on June 16, 2003, and therefore should not have been assessed a delay of three hundred ninety-eight (398) days.

Furthermore, in view of applicants' response filed June 16, 2003, the Office should have been assessed four hundred fifty-two (452) days of PTO delay pursuant to 37 C.F.R. §1.703(a)(2), because an Office action was not mailed until January 10, 2005.

However, applicants should have been assessed additional delay of five hundred fifty (550) days pursuant to 37 C.F.R. §1.704(c)(8)

---

[1] Applicants filed the PTA application with the issue fee.

[2] MPEP 503.

for the filing of an IDS on December 17, 2004. As applicants demonstrated above, they filed a "Response to Restriction Requirement" on June 16, 2003. Applicants filed a supplemental IDS on December 17, 2004. Accordingly, pursuant to 37 C.F.R. §1.704(c)(8), five hundred fifty (550) days of applicant delay should have been assessed.

In view thereof, the correct determination of patent term adjustment at the time of the mailing of the Notice of Allowance is **zero (0) days** (452 days of PTO delay and 647 (550+97) days of applicant delay).

The $200.00 fee set forth in 37 C.F.R. §1.18(e) has been charged to Deposit Account No. 08-1641, as authorized.[3]

The application file is being forwarded to the Office of Patent Publication for processing into a patent.

Telephone inquiries specific to this matter should be directed to Cliff Congo, Petitions Attorney, at (571)272-3207.

Karin Ferriter
Senior Legal Advisor
Office of Patent Legal Administration
Office of Deputy Commissioner
for Patent Examination Policy

Enclosure: Copy of Revised PAIR Screen

---

[3] See Comment 1 in Changes to Implement Patent Term Adjustment under Twenty-Year Patent Term; Final Rule, 1239 OG 14, 65 Fed. Reg. 54366 (Oct. 3 2000) (stating that the fee set forth in 37 C.F.R. 1.18(e) is charged to allow the Office to recover the estimated average cost of treating applications for patent term adjustment, and is not refundable even in the event of Office error).

OIPE IAP29
AUG 30 2005
PATENT & TRADEMARK OFFICE

IN THE UNITED STATES PATENT AND TRADEMARK OFFICE

In re application of:	Examiner: EPPERSON, JON D
Jim Wells et al.	Art Unit: 1639
Application Serial No. 10/121,216	Attorney's Docket No. 39750-0012 A
Filed: April 10, 2002	Customer No. 25213
For: Methods for Ligand Discovery	Confirmation No. 6239

EXPRESS MAIL LABEL NO.: EL 993 635 414 US
Date: August 30, 2005

REQUEST FOR RECONSIDERATION OF PATENT TERM ADJUSTMENT UNDER 37 C.F.R. § 1.705(b)

MS: PETITIONS
Commissioner for Patents
P.O. Box 1450
Alexandria, Virginia 22313-1450

Dear Sir:

Applicants hereby request reconsideration of the Patent Term Adjustment (PTA) accorded to the above-referenced patent application. The *Determination of Patent Term Adjustment under 35 U.S.C. 154(b)*, attached to the Notice of Allowance mailed on August 10, 2005, states that the PTA is "0" days.

REMARKS

According to the U.S. Patent and Trademark Office (PTO), the total PTA for the above-referenced patent application, based on the Applicants' Delay and USPTO Delay, was 0 days.

Applicants respectfully submit that, as described in detail below, the correct total PTA for this patent application is 355 days. This calculation is based on a total Applicants' Delay of 97 days and a total USPTO delay of 452 days.

An *Office Action* in connection with the present application was mailed on May 15, 2003. A *Response to the Office Action*, as attested by the attached date-stamped return receipt postcard, was filed by first class mail on June 12, 2003 and was timely received by the OIPE on June 16,

11/28/2005 AKELLEY 00000002 081641 10121216
01 FC:1455 200.00 DA

UNITED STATES PATENT AND TRADEMARK OFFICE

Commissioner for Patents
United States Patent and Trademark Office
P.O. Box 1450
Alexandria, VA 22313-1450
www.uspto.gov

HELLER EHRMAN LLP
275 MIDDLEFIELD RD
MENLO PARK CA 94025-3506

COPY MAILED

NOV 25 2005

OFFICE OF PETITIONS

In re	: DECISION REGARDING
Wells, et al.	: PATENT TERM ADJUSTMENT
Application No. 10/121,216	:
Filed: April 10, 2002	:
Attorney Docket No. 39750-0012A	:
	:

This is a decision on the "REQUEST FOR RECONSIDERATION OF PATENT TERM ADJUSTMENT UNDER 37 C.F.R. § 1.705(b)", filed August 30, 2005. Applicants request that the initial determination of patent term adjustment under 35 U.S.C. 154(b) be corrected from zero (0) days to three hundred fifty-five (355) days.

The application for patent term adjustment is **DISMISSED**.

The Office has updated the PAIR screen to reflect that the correct Patent Term Adjustment (PTA) determination at the time of the mailing of the Notice of Allowance is **zero (0) days** (452 days of PTO delay and 647 days of applicant delay). A copy of the updated PAIR screen, showing the correct determination, is enclosed.

On August 10, 2005, the Office mailed the Determination of Patent Term Adjustment under 35 U.S.C. 154(b) in the above-identified application. The Notice stated that the patent term adjustment

(PTA) to date is zero (0) days. On August 30, 2005, applicants timely[1] submitted the instant application for patent term adjustment, asserting that the correct number of days of PTA at the time of the mailing of the Notice of Allowance is three hundred fifty-five (355) days. Applicants fail to state whether the patent issuing from the application is subject to a terminal disclaimer.

Applicants assert entitlement to a patent term adjustment of three hundred fifty-five (355) days on the basis that the PTO improperly assessed applicants a delay of three hundred ninety-eight (398) days for responding to an Office action mailed on May 15, 2003. Applicants assert that they filed a response on June 16, 2003, not on September 16, 2004.

The Office initially determined a patent term adjustment of zero (0) days based on an adjustment for PTO delay of zero (0), reduced by Applicants' delays of three hundred ninety-eight (398) and ninety-seven (97) days pursuant to 35 U.S.C. 154(b)(2)(C)(ii) and 37 C.F.R. §1.704(b), and ninety-two (92) days pursuant to 35 U.S.C. 154(b)(2)(C)(ii) and 37 C.F.R. §1.704(c)(8). The adjustments of 398 and 92 days are at issue.

The adjustment of 398 days has been found to be incorrect. A review of the application file reveals that when applicants filed a copy of their response on September 16, 2004, they included a postcard receipt itemizing a "Response to Restriction Requirement", and bearing a USPTO date stamp of June 16, 2003. A postcard receipt which itemizes and properly identifies the items which are being filed serves as prima facie evidence of receipt in the USPTO of all the items listed thereon on the date stamped thereon by the USPTO.[2] Accordingly, it is concluded that Applicants timely filed a reply in response to the May 15, 2003 Office action on June 16, 2003, and therefore should not have been assessed a delay of three hundred ninety-eight (398) days.

Furthermore, in view of applicants' response filed June 16, 2003, the Office should have been assessed four hundred fifty-two (452) days of PTO delay pursuant to 37 C.F.R. §1.703(a)(2), because an Office action was not mailed until January 10, 2005.

However, applicants should have been assessed additional delay of five hundred fifty (550) days pursuant to 37 C.F.R. §1.704(c)(8)

---

[1] Applicants filed the PTA application with the issue fee.

[2] MPEP 503.

for the filing of an IDS on December 17, 2004. As applicants demonstrated above, they filed a "Response to Restriction Requirement" on June 16, 2003. Applicants filed a supplemental IDS on December 17, 2004. Accordingly, pursuant to 37 C.F.R. §1.704(c)(8), five hundred fifty (550) days of applicant delay should have been assessed.

In view thereof, the correct determination of patent term adjustment at the time of the mailing of the Notice of Allowance is **zero (0) days** (452 days of PTO delay and 647 (550+97) days of applicant delay).

The $200.00 fee set forth in 37 C.F.R. §1.18(e) has been charged to Deposit Account No. 08-1641, as authorized.[3]

The application file is being forwarded to the Office of Patent Publication for processing into a patent.

Telephone inquiries specific to this matter should be directed to Cliff Congo, Petitions Attorney, at (571)272-3207.

Karin Ferriter
Senior Legal Advisor
Office of Patent Legal Administration
Office of Deputy Commissioner
for Patent Examination Policy

Enclosure: Copy of Revised PAIR Screen

---

[3] See Comment 1 in Changes to Implement Patent Term Adjustment under Twenty-Year Patent Term; Final Rule, 1239 OG 14, 65 Fed. Reg. 54366 (Oct. 3 2000) (stating that the fee set forth in 37 C.F.R. 1.18(e) is charged to allow the Office to recover the estimated average cost of treating applications for patent term adjustment, and is not refundable even in the event of Office error).

UNITED STATES PATENT AND TRADEMARK OFFICE

APR 19 2004

COMMISSIONER FOR PATENTS
UNITED STATES PATENT AND TRADEMARK OFFICE
P.O. BOX 1450
ALEXANDRIA, VA 22313-1450
www.uspto.gov

SCULLY, SCOTT, MURPHY & PRESSER
400 Garden City Plaza
Garden City NY 11530

In re application of Robert L. Williams et al.	:
Serial No. : 10/121,220	: DECISION ON PETITION
Filed : April 12, 2002	:
Attorney Docket No.: 8756ZYXWVU	:

This is in response to applicant's petition, filed August 26, 2002, to make the above-identified application special under the provisions of 37 CFR 1.102(d) because the pending claims are being infringed.

Applicant has satisfied the requirements set forth in M.P.E.P. 708.02, II.

The petition is **GRANTED.**

The examiner has already mailed an action on the merits.

Should there be any questions with regard to this letter please contact Bruce Campell by letter addressed to the Director, Technology Center 1600, P.O. Box 1450, Alexandria, VA, 22313-1450, or by telephone at (571) 272-0974 or by facsimile transmission at (571) 273-0974.

Bruce Campell

Bruce Campell
Supervisory Patent Examiner / Special Program Examiner
Technology Center 1600

UNITED STATES PATENT AND TRADEMARK OFFICE

Commissioner for Patents
United States Patent and Trademark Office
P.O. Box 1450
Alexandria, VA 22313-1450
www.uspto.gov

CANTOR COLBURN LLP
55 GRIFFIN ROAD SOUTH
BLOOMFIELD, CT 06002

COPY MAILED

FEB 0 2 2005

OFFICE OF PETITIONS

In re Application of :
Peter S. Aronstam et al :
Application No. 10/121,228 : ON PETITION
Filed: April 12, 2002 :
Attorney Docket No. 1284-P002US

This is a decision on the petition, filed January 31, 2005, under 37 CFR 1.313(c)(2) to withdraw the above-identified application from issue after payment of the issue fee.

The petition is **GRANTED**.

The above-identified application is withdrawn from issue for consideration of a submission under 37 CFR 1.114 (request for continued examination). See 37 CFR 1.313(c)(2).

Petitioner is advised that the issue fee paid on January 24, 2005 in the above-identified application cannot be refunded. If, however, the above-identified application is again allowed, petitioner may request that it be applied towards the issue fee required by the new Notice of Allowance.[1]

Telephone inquiries should be directed to Irvin Dingle at (571) 272-3210.

This matter will be forwarded to Technology Center AU 2863 for processing of the request for continued examination under 37 CFR 1.114 and for consideration of the concurrently filed amendment and Information Disclosure Statement.

Irvin Dingle
Petitions Examiner
Office of Petitions
Office of the Deputy Commissioner
for Patent Examination Policy

---

[1] The request to apply the issue fee to the new Notice may be satisfied by completing and returning the new Issue Fee Transmittal Form PTOL-85(b), which includes the following language thereon: Commissioner for Patents is requested to apply the Issue Fee and Publication Fee (if any) or re-apply any previously paid issue fee to the application identified above. Petitioner is advised that, whether a fee is indicated as being due or not, the Issue Fee Transmittal Form **must** be completed and timely submitted to avoid abandonment. Note the language in bold text on the first page of the Notice of Allowance and Fee(s) Due (PTOL-85).

UNITED STATES PATENT AND TRADEMARK OFFICE

COMMISSIONER FOR PATENTS
UNITED STATES PATENT AND TRADEMARK OFFICE
P.O. BOX 1450
ALEXANDRIA, VA 22313-1450
www.uspto.gov

MAR 21 2005

MAILED

MAR 21 2005

OFFICE OF THE DIRECTOR
TC 3600

MacMillan Sobanski & Todd, LLC
One Maritime Plaza Fourth Floor
720 Water Street
Toledo, OH 43604-1619

In re Application of	:	
Mark Bugosh	:	
Serial No. 10/121,233	:	NOTICE OF WITHDRAWAL
Filed: April 12, 2002	:	FROM ISSUE
For: ELECTRIC POWER STEERING	:	UNDER 37 CFR 1.313(b)
ASSEMBLY	:	

The above-identified application is withdrawn from issue after the payment of the issue fee due to unpatentability of one or more claims.

The above-identified application is hereby withdrawn from issue.

The issue fee is refundable upon written request. If, however, the application is again found allowable, the issue fee can be applied toward payment of the issue fee in the amount identified on the new Notice of Allowance and Issue Fee Due upon written request. This request and any balance due must be received on or before the due date noted in the new Notice of Allowance in order to prevent abandonment of the application.

Telephone inquiries should be directed to Examiner Lum Vannucci at (703) 305-0232.

The above-identified application is being forwarded to the examiner for prompt appropriate action, including notifying applicant of the new status of this application.

Robert Oberleitner, Director
Technology Center 3600

UNITED STATES PATENT AND TRADEMARK OFFICE

Commissioner for Patents
United States Patent and Trademark Office
P.O. Box 1450
Alexandria, VA 22313-1450
www.uspto.gov

VALERIE K. FRIEDRICH
JENKENS & GILCHRIST
5 HOUSTON CENTER
1401 MCKINNEY, SUITE 2700
HOUSTON, TX 77010

COPY MAILED

APR 2 9 2004

OFFICE OF PETITIONS

In re Application of :
Jui-Hsin R. Huang et al :
Application No. 10/121,255 : NOTICE
Filed: April 12, 2002 :
Attorney Docket No. 010.0097

This is a notice regarding your request for acceptance of a fee deficiency submission under 37 CFR 1.28. On September 1, 1998, the Court of Appeals for the Federal Circuit held that 37 CFR 1.28(c) is the sole provision governing the time for correction of the erroneous payment of the issue fee as a small entity. **See DH Technology v. Synergystex International, Inc. 154 F.3d 1333, 47 USPQ2d 1865 (Fed. Cir. Sept. 1, 1998).**

The Office no longer investigates or rejects original or reissue applications under 37 CFR 1.56. **1098 Off. Gaz. Pat. Office 502 (January 3, 1989)**. Therefore, nothing in this Notice is intended to imply that an investigation was done.

Your fee deficiency submission under 37 CFR 1.28 is hereby **ACCEPTED**.

Inquiries related to this communication should be directed to the Office of Petitions Staff at (703) 305-9285.

This file is being forwarded to Technology Center AU 1754.

Irvin Dingle
Petitions Examiner
Office of Petitions
Office of the Deputy Commissioner
for Patent Examination Policy

UNITED STATES PATENT AND TRADEMARK OFFICE

Commissioner for Patents
United States Patent and Trademark Office
P.O. Box 1450
Alexandria, VA 22313-1450
www.uspto.gov

Ira Lee Zebrak
Intellectual Property Dept.
The BOC Group, Inc.
100 Mountain Ave.
Murray Hill, NJ 07974

COPY MAILED

APR 22 2005

OFFICE OF PETITIONS

In re Application of :
Richard A. Hogle, et al. :
Application No. 10/121,270 :
Filed: April 12, 2002 :
Attorney Docket No. M01A244 :

ON PETITION

This is a decision on the petition, filed February 25, 2005, under 37 CFR 1.313(c)(2) to withdraw the above-identified application from issue after payment of the issue fee.

The petition is **GRANTED**.

The above-identified application is withdrawn from issue for consideration of a submission under 37 CFR 1.114 (request for continued examination). See 37 CFR 1.313(c)(2).

Petitioner is advised that the issue fee paid on March 8, 2045, using a Certificate of Mailing or Transmission under 37 CFR 1.8 dated March 4, 2004, in the above-identified application cannot be refunded. If, however, the above-identified application is again allowed, petitioner may request that it be applied towards the issue fee required by the new Notice of Allowance. [1]

Telephone inquiries relating to this decision should be directed to the undersigned at (571) 272-3204.

The application is being forwarded to Technology Center AU 2818 for further processing of the request for continued examination under 37 CFR 1.114.

Sherry D. Brinkley
Petitions Examiner
Office of Petitions
Office of the Deputy Commissioner
for Patent Examination Policy

[1] The request to apply the issue fee to the new Notice may be satisfied by completing and returning the new Issue Fee Transmittal Form PTOL-85(b), which includes the following language thereon: "Commissioner for Patents is requested to apply the Issue Fee and Publication Fee (if any) or re-apply any previously paid issue fee to the application identified above." Petitioner is advised that, whether a fee is indicated as being due or not, the Issue Fee Transmittal Form **must** be completed and timely submitted to avoid abandonment. Note the language in bold text on the first page of the Notice of Allowance and Fee(s) Due (PTOL-85).

UNITED STATES PATENT AND TRADEMARK OFFICE

UNITED STATES DEPARTMENT OF COMMERCE
United States Patent and Trademark Office
Address: COMMISSIONER FOR PATENTS
P.O. Box 1450
Alexandria, Virginia 22313-1450
www.uspto.gov

IBM CORPORATION
3039 CORNWALLIS RD.
DEPT. T81 / B503, PO BOX 12195
RESEARCH TRIANGLE PARK, NC 27709

Mail Date: 04/20/2010

Applicant	: Peter J. Johnson	: DECISION ON REQUEST FOR
Patent Number	: 7581218	: RECALCULATION of PATENT
Issue Date	: 08/25/2009	: TERM ADJUSTMENT IN VIEW
Appliction No	: 10/121,271	: OF WYETH AND NOTICE OF INTENT TO
Filed	: 04/12/2002	: ISSUE CERTIFICATE OF CORRECTION
		:

The Request for Recalculation is **GRANTED** to the extent indicated.

The patent term adjustment has been determined to be **1856** days. The USPTO will *sua sponte* issue a certificate of correction reflecting the amount of PTA days determined by the recalculation.

Prior to the issuance of the certificate of correction, the USPTO will afford patentee an opportunity to be heard and request reconsideration. Accordingly, patentee has **one month or thirty (30) days**, whichever is longer, to file a request for reconsideration of this patent term adjustment calculation. See 35 U.S.C. 154(b)(3)(B)(ii) and 37 CFR 1.322(a)(4). No extensions of time will be granted under 37 CFR 1.136.

Patentee should use document code PET.OP if electronically filing a request for reconsideration of this patent term adjustment calculation. The patentee must also include the information required by 37 CFR 1.705(b)(2) and the fee required by 37 CFR 1.18(e). If patentee does not file a timely request for reconsideration of this patent term adjustment calculation including the information required by 37 CFR 1.705(b)(2) and the fee required by 37 CFR 1.18(e), the USPTO will issue a certificate of correction reflecting the PTA determination noted above.

Patentee should be aware that in order to preserve the right to review in the United States District Court for the District of Columbia of the USPTO patent term adjustment determination, patentee must ensure that he or she also take the steps required under 35 U.S.C. 154(b)(4)(A) in a timely manner. Nothing in the request for recalculation should be construed as providing an alternative time frame for commencing a civil action under 35 U.S.C. 154(b)(4)(A).

Any questions concerning this decision should be directed to the Office of Patent Legal Administration at 571-272-7702.

UNITED STATES PATENT AND TRADEMARK OFFICE

COMMISSIONER FOR PATENTS
UNITED STATES PATENT AND TRADEMARK OFFICE
P.O. BOX 1450
ALEXANDRIA, VA 22313-1450
www.uspto.gov

COPY MAILED

JUN 25 2008

OFFICE OF PETITIONS

CLARK & ELBING LLP
101 FEDERAL STREET
BOSTON MA 02110

In re Patent No. 7,297,538	: DECISION ON APPLICATION FOR
Issued: November 20, 2007	: PATENT TERM ADJUSTMENT
Application No. 10/121,295	: and NOTICE OF INTENT TO
Filed: April 12, 2002	: ISSUE CERTIFICATE OF
Dkt. No.: 50391/003002	: CORRECTION

This is a decision on the "REQUEST FOR CORRECTION OF PATENT TERM ADJUSTMENT," filed December 19, 2007. This matter is being properly treated as an application for patent term adjustment under 37 CFR 1.705(d).

The application for patent term adjustment ("PTA") under 37 CFR 1.705(d) is GRANTED.

The above-identified application matured into U.S. Patent No. 7,297,538 on November 20, 2007. The instant request for reconsideration was timely filed in accordance with 37 C.F.R. § 1.705(d). The patent issued with a PTA of 578 days. Patentees argue that the adjustment correct adjustment at the time of issuance is 629 days.

Patentees contest the reduction of 51 days in connection with a submission on October 1, 2007.

A review of the record reveals that on October 1, 2007, applicants submitted a "REPLY TO THE NOTICE OF ALLOWANCE."

A response to the examiner's reasons for allowance or a request to correct an error or omission in the "Notice of Allowance" or "Notice of Allowability is not deemed a failure to engage in reasonable efforts to conclude prosecution within the meaning of 37 CFR 1.704(c)(10). *See*, MPEP 2732 and *Clarification of 37 CFR 1.704(c)(10) - Reduction of Patent Term Adjustment for Certain Types of Papers Filed After a Notice of Allowance has been Mailed*, 1247 Off. Gaz. Pat. Office 111 (June 26, 2001).

In view thereof, at the time of issuance, the patent was entitled to an adjustment 629 days (adjustments totaling 952 days less reductions totaling 323 days), as argued by patentees.

The required application fee of $200.00 has been received.

This application file will be forwarded to the Certificate of Corrections branch for issuance of a certificate of correction to indicate that the term of this patent is extended or adjusted under 35 U.S.C. 154(b) by 629 days.

Telephone inquiries specific to this matter may be directed to Petitions Attorney Alesia M. Brown at (571) 272-3205.

Kery Fries
Senior Patent Attorney
Office of Patent Legal Administration
Office of Deputy Commissioner
for Patent Examination Policy

Enclosure: Draft Certificate of Correction

UNITED STATES PATENT AND TRADEMARK OFFICE

CERTIFICATE OF CORRECTION

PATENT	:	7,297,538 B2
DATED	:	November 20, 2007
INVENTOR(S)	:	Lee, et al.

It is certified that error appears in the above-identified patent and that said Letters Patent is hereby corrected as shown below:

On the cover page,

[*] Notice: Subject to any disclaimer, the term of this patent is extended or adjusted under 35 USC 154(b) by 578 days

Delete the phrase "by 578 days" and insert – by 629 days--

Day : Monday
Date: 6/23/2008

PALM INTRANET

Time: 12:26:48

PTA Calculations for Application: 10/121295			
Application Filing Date:	04/12/2002	PTO Delay (PTO):	952
Issue Date of Patent:	11/20/2007	Three Years:	0
Pre-Issue Petitions:	0	Applicant Delay (APPL):	374
Post-Issue Petitions:	0	Total PTA (days):	629
PTO Delay Adjustment:	51		

File Contents History

Number	Date	Contents Description	PTO	APPL	START
87	06/23/2008	ADJUSTMENT OF PTA CALCULATION BY PTO	51		
82.5	10/31/2007	PTA 36 MONTHS	586		
82	11/20/2007	PATENT ISSUE DATE USED IN PTA CALCULATION			
81	10/08/2007	EXPORT TO FINAL DATA CAPTURE			
80	10/05/2007	DISPATCH TO FDC			
79	10/05/2007	APPLICATION IS CONSIDERED READY FOR ISSUE			
78	10/01/2007	MISCELLANEOUS INCOMING LETTER		51	
77	10/01/2007	ISSUE FEE PAYMENT VERIFIED		3	70
76	09/28/2007	ISSUE FEE PAYMENT RECEIVED			
75	08/14/2007	FINISHED INITIAL DATA CAPTURE			
74	07/26/2007	RECEIPT INTO PUBS			
73	07/18/2007	RECEIPT INTO PUBS			
72	07/16/2007	RECEIPT INTO PUBS			
71	07/02/2007	EXPORT TO INITIAL DATA CAPTURE			
70	06/28/2007	MAIL NOTICE OF ALLOWANCE	85		51
69	06/28/2007	MAIL EXAMINER'S AMENDMENT			
68	06/26/2007	ISSUE REVISION COMPLETED			
67	06/26/2007	ALLOWED CASE RETURNED TO THE EXAMINER FOR CLERICAL PROCESSING			
65	06/26/2007	DOCUMENT VERIFICATION			
64	06/26/2007	NOTICE OF ALLOWANCE DATA VERIFICATION COMPLETED			
63	06/26/2007	EXAMINER'S AMENDMENT COMMUNICATION			
62	06/25/2007	NOTICE OF ALLOWABILITY			
61	06/19/2007	MAIL EXAMINER INTERVIEW SUMMARY (PTOL			

		- 413)			
60	06/18/2007	DATE FORWARDED TO EXAMINER			
59	06/11/2007	AMENDMENT/ARGUMENT AFTER NOTICE OF APPEAL			
58	06/11/2007	EXAMINER INTERVIEW SUMMARY RECORD (PTOL - 413)			
57	06/01/2007	MAIL ADVISORY ACTION (PTOL - 303)			
56	05/29/2007	ADVISORY ACTION (PTOL-303)			
55	05/25/2007	CASE DOCKETED TO EXAMINER IN GAU			
54	05/25/2007	DATE FORWARDED TO EXAMINER			
53	12/04/2006	AMENDMENT/ARGUMENT AFTER NOTICE OF APPEAL			
52	12/04/2006	AFFIDAVIT(S) (RULE 131 OR 132) OR EXHIBIT(S) RECEIVED			
51	12/04/2006	NOTICE OF APPEAL FILED		93	47
50	12/04/2006	REQUEST FOR EXTENSION OF TIME - GRANTED			
49	11/15/2006	CASE DOCKETED TO EXAMINER IN GAU			
48	09/15/2006	CASE DOCKETED TO EXAMINER IN GAU			
47	06/02/2006	MAIL FINAL REJECTION (PTOL - 326)			
46	05/30/2006	FINAL REJECTION			
45	04/25/2006	INFORMATION DISCLOSURE STATEMENT CONSIDERED			
44	04/25/2006	REFERENCE CAPTURE ON IDS			
43.7	04/25/2006	INFORMATION DISCLOSURE STATEMENT (IDS) FILED		0	41
43	04/25/2006	INFORMATION DISCLOSURE STATEMENT (IDS) FILED			
42	05/04/2006	DATE FORWARDED TO EXAMINER			
41	04/25/2006	RESPONSE AFTER NON-FINAL ACTION		94	39
40	04/25/2006	REQUEST FOR EXTENSION OF TIME - GRANTED			
39	10/21/2005	MAIL NON-FINAL REJECTION			
38	10/17/2005	NON-FINAL REJECTION			
37	08/03/2005	DATE FORWARDED TO EXAMINER			
36	07/05/2005	RESPONSE AFTER NON-FINAL ACTION		34	34
35	07/05/2005	REQUEST FOR EXTENSION OF TIME - GRANTED			
34	03/01/2005	MAIL NON-FINAL REJECTION			
33	02/22/2005	NON-FINAL REJECTION			

32	02/02/2005	CASE DOCKETED TO EXAMINER IN GAU			
31	01/31/2005	DATE FORWARDED TO EXAMINER			
30	01/14/2005	RESPONSE TO ELECTION / RESTRICTION FILED		94	26
29	01/14/2005	REQUEST FOR EXTENSION OF TIME - GRANTED			
28	01/14/2005	WORKFLOW INCOMING AMENDMENT IFW			
27	07/29/2004	CASE DOCKETED TO EXAMINER IN GAU			
26	07/12/2004	MAIL RESTRICTION REQUIREMENT			
25	07/12/2004	REQUIREMENT FOR RESTRICTION / ELECTION			
24	06/21/2004	CASE DOCKETED TO EXAMINER IN GAU			
23	06/03/2004	CASE DOCKETED TO EXAMINER IN GAU			
22	05/27/2004	DATE FORWARDED TO EXAMINER			
21	05/20/2004	RESPONSE TO ELECTION / RESTRICTION FILED			
20	05/20/2004	REQUEST FOR EXTENSION OF TIME - GRANTED			
19	09/09/2002	PRELIMINARY AMENDMENT			
18	05/20/2004	WORKFLOW INCOMING AMENDMENT IFW			
17	03/19/2004	MAIL RESTRICTION REQUIREMENT	281		-1
16	03/17/2004	REQUIREMENT FOR RESTRICTION / ELECTION			
15	11/25/2003	IFW TSS PROCESSING BY TECH CENTER COMPLETE			
14	11/25/2003	REFERENCE CAPTURE ON IDS			
13.7	06/11/2003	INFORMATION DISCLOSURE STATEMENT (IDS) FILED			
13	06/11/2003	INFORMATION DISCLOSURE STATEMENT (IDS) FILED			
12	09/16/2003	IFW TSS PROCESSING BY TECH CENTER COMPLETE			
11	07/15/2003	CASE DOCKETED TO EXAMINER IN GAU			
10	10/25/2002	APPLICATION DISPATCHED FROM OIPE			
9	10/02/2002	APPLICATION IS NOW COMPLETE			
7	09/09/2002	ADDITIONAL APPLICATION FILING FEES		5	4
6	09/09/2002	A STATEMENT BY ONE OR MORE INVENTORS SATISFYING THE REQUIREMENT UNDER 35 USC 115, OATH OF THE APPLIC			
5	09/09/2002	OMMITED DRAWINGS. APPLICANT HAS PETITIONED THAT THE FILING DATE NOT BE CHANGED AND THE PETITION HAS			
4	06/04/2002	NOTICE MAILED--APPLICATION INCOMPLETE--FILING DATE ASSIGNED			

3	04/26/2002	IFW SCAN & PACR AUTO SECURITY REVIEW			
2	04/25/2002	IFW SCAN & PACR AUTO SECURITY REVIEW			
1	04/12/2002	INITIAL EXAM TEAM NN			

Search Another: Application# [ ] Search

EXPLANATION OF PTA CALCULATION

EXPLANATION OF PTE CALCULATION

To go back, right click here and select Back. To go forward, right click here and select Forward. To refresh, right click here and select Refresh.

Back to OASIS | Home page

UNITED STATES PATENT and TRADEMARK OFFICE

COMMISSIONER FOR PATENTS
UNITED STATES PATENT AND TRADEMARK OFFICE
P.O. BOX 1450
ALEXANDRIA, VA 23313-1450
WWW.USPTO.GOV

Pet. Dec.

Mailed: JUL - 1 2004

DWW
Paper No. ____

In re Application of
Brummer et al.
Serial No.: 10/121,300
Filed: April 12, 2002

DECISION ON PETITION UNDER *37 CFR 1.48(b)*

For: ETHYLENE-STYRENE COPOLYMERS AND PHENOL-TRIAZOLE TYPE COMPLEXES, CATALYSTS, AND PROCESSES FOR POLYMERIZING

This is a decision on the request for CORRECTION OF INVENTORSIP UNDER 37 C.F.R. 1.48(b) (herein treated as PETITION TO DELETE CORRECTLY NAMED PERSON WHO IS NOT INVENTOR OF INVENTION NOW BEING CLAIMED) filed April 19, 2004 to correct inventorship under 37 CFR 1.48(b) by deleting the name of James Longmire from the list of inventors of the instant application.

It is noted that the applicant has met the requirements of (1) a petition including a statement identifying each named inventor who is being deleted and acknowledging that the inventor's invention is no longer being claimed in the application; and (2) the fee set forth in 37 CFR 1.17(i).

The petition is **GRANTED**.

The application file is being forwarded to the appropriate section of the Patent and Trademark Office for correction of the record.

David W. Wu
Supervisory Patent Examiner
Art Unit 1713
Technology Center 1700

Symyx Technologies, Inc.
Legal Department
3100 Central Expressway
Santa Clara, CA 95051

UNITED STATES PATENT AND TRADEMARK OFFICE

Commissioner for Patents
United States Patent and Trademark Office
P.O. Box 1450
Alexandria, VA 22313-1450
www.uspto.gov

JEFFREY H. KAMENETSKY
CHRISTOPHER & WEISBERG, P.A.
200 EAST LAS OLAS BOULEVARD, SUITE 2040
FORT LAUDERDALE, FL 33301

COPY MAILED

JAN 07 2005

OFFICE OF PETITIONS

In re Application of :
Kirk Ramey :
Application No. 10/121,318 :
Filed: April 12, 2002 :
Attorney Docket No. NDSZ 200011

NOTICE

This is a notice regarding your request for acceptance of a fee deficiency submission under 37 CFR 1.28. On September 1, 1998, the Court of Appeals for the Federal Circuit held that 37 CFR 1.28(c) is the sole provision governing the time for correction of the erroneous payment of the issue fee as a small entity. **See DH Technology v. Synergystex International, Inc. 154 F.3d 1333, 47 USPQ2d 1865 (Fed. Cir. Sept. 1, 1998).**

The Office no longer investigates or rejects original or reissue applications under 37 CFR 1.56. **1098 Off. Gaz. Pat. Office 502 (January 3, 1989).** Therefore, nothing in this Notice is intended to imply that an investigation was done.

Your fee deficiency submission under 37 CFR 1.28 is hereby **ACCEPTED**.

Inquiries related to this communication should be directed to Irvin Dingle at (571) 272-3210.

Irvin Dingle
Petitions Examiner
Office of Petitions
Office of the Deputy Commissioner
for Patent Examination Policy

UNITED STATES
PATENT AND
TRADEMARK OFFICE

UNDER SECRETARY OF COMMERCE FOR INTELLECTUAL PROPERTY
AND DIRECTOR OF THE UNITED STATES PATENT AND TRADEMARK OFFICE
WASHINGTON, D.C. 20231
WWW.USPTO.GOV

DEC 16 2002

SCHWEGMAN, LUNDBERG, WOESSNER & KLUTH, P.A.
P.O. BOX 2938
MINNEAPOLIS MN 55402

#8

In re Application of	:
Gary Mitchell Davenport	:
Serial No.: 10/121,325	: PETITION TO MAKE SPECIAL
Filed: April 12, 2002	:
Attorney Docket No.: 1448.014	:

This is in response to applicants' petition filed April 12, 2002, to make the above-identified application special under the provisions of 37 CFR 1.102(d). The delay in acting on this petition is regretted.

Applicant has not satisfied the provisions set forth in M.P.E.P. 708.02, VIII. Therefor the petition is **DISMISSED** for the reasons set forth below.

M.P.E.P. 708.02, VIII, sets forth the conditions for making an application special as reproduced below:

> A new application (one which has not received any examination by the examiner) may be granted special status provided that applicant (and this term includes applicant's attorney or agent) complies with each of the following items:
> (A) Submits a petition to make special accompanied by the fee set forth in 37 CFR 1.17(h);
> (B) Presents all claims directed to a single invention, or if the Office determines that all the claims presented are not obviously directed to a single invention, will make an election without traverse as a prerequisite to the grant of special status.
> The election may be made by applicant at the time of filing the petition for special status. Should applicant fail to include an election with the original papers or petition and the Office determines that a requirement should be made, the established telephone restriction practice will be followed.....
> (C) Submits a statement(s) that a pre-examination search was made, listing the field of search by class and subclass, publication, Chemical Abstracts, foreign patents, etc. A search made by a foreign patent office satisfies this requirement;
> (D) Submits one copy each of the references deemed most closely related to the subject matter encompassed by the claims if said references are not already of record; and

(E) Submits a detailed discussion of the references, which discussion points out, with the particularity required by 37 CFR 1.111 (b) and (c), how the claimed subject matter is patentable over the references.

The claims have not been reviewed for compliance with item (B). Applicant has not submitted the statement required in item (C) above. A prior art statement complying with item (D) has been submitted, however no discussion of the references as required by item (E) has been provided. Further applicant's statement that the invention relates to counter terrorism, but is more appropriate under Section IX. Had the petition been filed under this section it would have been dismissed as not meeting the requirements that the device be a "system". A mammal is not considered to be a "system".

Should there be any questions with regard to this letter please contact William R. Dixon, Jr. by letter addressed to the Director, Technology Center 1600, Washington, DC 20231, or by telephone at (703) 308-3824 or by facsimile transmission at (703) 305-7230

William R. Dixon, Jr.
Special Program Examiner
Technology Center 1600

UNITED STATES PATENT AND TRADEMARK OFFICE

UNITED STATES DEPARTMENT OF COMMERCE
United States Patent and Trademark Office
Address: COMMISSIONER FOR PATENTS
P.O. Box 1450
Alexandria, Virginia 22313-1450
www.uspto.gov

PVF -- ORACLE INTERNATIONAL CORPORATION
c/o PARK, VAUGHAN & FLEMING LLP
2820 FIFTH STREET
DAVIS, CA 95618-7759

Mail Date: 04/21/2010

Applicant	: Jedidja Lubbers	: DECISION ON REQUEST FOR
Patent Number	: 7620887	: RECALCULATION of PATENT
Issue Date	: 11/17/2009	: TERM ADJUSTMENT IN VIEW
Appliction No	: 10/121,354	: OF WYETH AND NOTICE OF INTENT TO
Filed	: 04/12/2002	: ISSUE CERTIFICATE OF CORRECTION
		:

The Request for Recalculation is **GRANTED** to the extent indicated.

The patent term adjustment has been determined to be **672** days. The USPTO will *sua sponte* issue a certificate of correction reflecting the amount of PTA days determined by the recalculation.

Prior to the issuance of the certificate of correction, the USPTO will afford patentee an opportunity to be heard and request reconsideration. Accordingly, patentee has **one month or thirty (30) days**, whichever is longer, to file a request for reconsideration of this patent term adjustment calculation. See 35 U.S.C. 154(b)(3)(B)(ii) and 37 CFR 1.322(a)(4). No extensions of time will be granted under 37 CFR 1.136.

Patentee should use document code PET.OP if electronically filing a request for reconsideration of this patent term adjustment calculation. The patentee must also include the information required by 37 CFR 1.705(b)(2) and the fee required by 37 CFR 1.18(e). If patentee does not file a timely request for reconsideration of this patent term adjustment calculation including the information required by 37 CFR 1.705(b)(2) and the fee required by 37 CFR 1.18(e), the USPTO will issue a certificate of correction reflecting the PTA determination noted above.

Patentee should be aware that in order to preserve the right to review in the United States District Court for the District of Columbia of the USPTO patent term adjustment determination, patentee must ensure that he or she also take the steps required under 35 U.S.C. 154(b)(4)(A) in a timely manner. Nothing in the request for recalculation should be construed as providing an alternative time frame for commencing a civil action under 35 U.S.C. 154(b)(4)(A).

Any questions concerning this decision should be directed to the Office of Patent Legal Administration at 571-272-7702.

UNITED STATES PATENT AND TRADEMARK OFFICE

UNITED STATES DEPARTMENT OF COMMERCE
United States Patent and Trademark Office
Address: COMMISSIONER FOR PATENTS
P.O. Box 1450
Alexandria, Virginia 22313-1450
www.uspto.gov

PVF -- ORACLE INTERNATIONAL CORPORATION
c/o PARK, VAUGHAN & FLEMING LLP
2820 FIFTH STREET
DAVIS, CA 95618-7759

Mail Date: 05/18/2010

Applicant : Jedidja Lubbers
Patent Number : 7620887
Issue Date : 11/17/2009
Application No : 10/121,354
Filed : 04/12/2002

: NOTICE CONCERNING IMPROPER
: CALCULATION OF PATENT TERM
: ADJUSTMENT BASED UPON USPTO
: IMPROPERLY MEASURING REDUCTION
: PERIOD UNDER 37 CFR 1.704(c)(10).

The United States Patent and Trademark Office (USPTO) discovered that in processing the recent recalculation decisions mailed in response to patentee's filed Request for Recalculation of Patent Term Adjustment in view of Wyeth, the USPTO improperly measured the reduction period for reductions under 37 CFR 1.704(c)(10). Pursuant to 37 CFR 1.704(c)(10), patentee's reduction begins on the date of filing the amendment under 37 CFR 1.312 ("1.312 amendment") or other related paper and ends on the date that the Office mails a response to the filing of the 1.312 amendment or other paper. It has been discovered that during the recalculation, the calculation failed to the limit the reduction to the mail date of the response to the 1.312 amendment or other paper. Accordingly, patentee's reductions were greater than warranted.

This notice **VACATES** the previous GRANTED request for recalculation and provides patentee with a revised GRANTED recalculation.

The patent term adjustment has been determined to be **704** days. The USPTO will *sua sponte* issue a certificate of correction reflecting the amount of patent term adjustment (PTA) days determined by the recalculation.

Prior to the issuance of the certificate of correction, the USPTO will afford patentee an opportunity to be heard and request reconsideration. Accordingly, patentee has **one month or thirty (30) days** from the mail date of this notice, whichever is longer, to file a request for reconsideration of this PTA calculation. See 35 U.S.C. § 154(b)(3)(B)(ii) and 37 CFR 1.322(a)(4).

Patentee should use document code PET.OP if electronically filing a request for reconsideration of this PTA calculation. The patentee must also include the information required by 37 CFR 1.705(b)(2), and the fee required by 37 CFR 1.18(e). If patentee does not file a timely request for reconsideration of this PTA calculation, including the information required by 37 CFR 1.705(b)(2) and the fee required by 37 CFR 1.18(e), the USPTO will issue a certificate of correction reflecting the PTA determination noted above.

Patentee should be aware that in order to preserve the right of review of the USPTO's PTA determination in the United States District Court for the District of Columbia, patentee must ensure that the steps required under 35 U.S.C. § 154 (b)(4) are taken in a timely manner. Nothing in the request for recalculation should be construed as providing an alternative time frame for commencing a civil action under 35 U.S.C. § 154(b)(4).

UNITED STATES PATENT AND TRADEMARK OFFICE

Commissioner for Patents
United States Patent and Trademark Office
P.O. Box 1450
Alexandria, VA 22313-1450
www.uspto.gov

LAWRENCE ROSENTHAL
STROOCK & STROOCK & LAVAN LLP
180 MAIDEN LANE
NEW YORK, NY 10038

COPY MAILED

APR 1 9 2004

OFFICE OF PETITIONS

ON PETITION

In re Application of :
Satoshi Shinada et al :
Application No. 10/121,358 :
Filed: April 12, 2002 :
Attorney Docket No. 524941/0009

This is a decision on the petition, filed April 16, 2004, under 37 CFR 1.313(c)(2) to withdraw the above-identified application from issue after payment of the issue fee.

The petition is **GRANTED**.

The above-identified application is withdrawn from issue for consideration of a submission under 37 CFR 1.114 (request for continued examination). See 37 CFR 1.313(c)(2).

Petitioner is advised that the issue fee paid on March 17, 2004 in the above-identified application cannot be refunded. If, however, the above-identified application is again allowed, petitioner may request that it be applied towards the issue fee required by the new Notice of Allowance.[1]

Telephone inquiries should be directed to Irvin Dingle at (703) 306-5684.

The file will be forwarded to Technology Center AU 2853 for processing of the request for continued examination under 37 CFR 1.114 and for consideration of the concurrently filed Information Disclosure Statement.

Irvin Dingle
Petitions Examiner
Office of Petitions
Office of the Deputy Commissioner
for Patent Examination Policy

---

[1] The request to apply the issue fee to the new Notice may be satisfied by completing and returning the new Issue Fee Transmittal Form PTOL-85(b), which includes the following language thereon: "Commissioner for Patents is requested to apply the Issue Fee and Publication Fee (if any) or re-apply any previously paid issue fee to the application identified above." Petitioner is advised that, whether a fee is indicated as being due or not, the Issue Fee Transmittal Form **must** be completed and timely submitted to avoid abandonment. Note the language in bold text on the first page of the Notice of Allowance and Fee(s) Due (PTOL-85).

UNITED STATES PATENT AND TRADEMARK OFFICE

Commissioner for Patents
United States Patent and Trademark Office
P.O. Box 1450
Alexandria, VA 22313-1450
www.uspto.gov

STROOCK & STROOCK & LAVAN LLP
180 MAIDEN LANE
NEW YORK, NY 10038

COPY MAILED
MAY 27 2005
OFFICE OF PETITIONS

In re Application of :
Satoshi Shinada et al :
Application No. 10/121,358 : ON PETITION
Filed: April 12, 2002 :
Attorney Docket No. 524941/0009

This is a decision on the petition, filed May 26, 2005, under 37 CFR 1.313(c)(2) to withdraw the above-identified application from issue after payment of the issue fee.

The petition is **GRANTED**.

The above-identified application is withdrawn from issue for consideration of a submission under 37 CFR 1.114 (request for continued examination). See 37 CFR 1.313(c)(2).

Petitioner is advised that the issue fee paid on April 13, 2005 in the above-identified application cannot be refunded. If, however, the above-identified application is again allowed, petitioner may request that it be applied towards the issue fee required by the new Notice of Allowance.[1]

Telephone inquiries should be directed to Irvin Dingle at (571) 272-3210.

This matter is being referred to Technology Center AU 2853 for processing of the request for continued examination under 37 CFR 1.114 and for consideration of the concurrently filed Information Disclosure Statement.

Irvin Dingle
Petitions Examiner
Office of Petitions
Office of the Deputy Commissioner
for Patent Examination Policy

---

[1] The request to apply the issue fee to the new Notice may be satisfied by completing and returning the new Issue Fee Transmittal Form PTOL-85(b), which includes the following language thereon: Commissioner for Patents is requested to apply the Issue Fee and Publication Fee (if any) or re-apply any previously paid issue fee to the application identified above. Petitioner is advised that, whether a fee is indicated as being due or not, the Issue Fee Transmittal Form **must** be completed and timely submitted to avoid abandonment. Note the language in bold text on the first page of the Notice of Allowance and Fee(s) Due (PTOL-85).

UNITED STATES PATENT AND TRADEMARK OFFICE

Commissioner for Patents
United States Patent and Trademark Office
P.O. Box 1450
Alexandria, VA 22313-1450
www.uspto.gov

COPY MAILED

AUG 3 0 2005

OFFICE OF PETITIONS

STROOCK & STROOCK & LAVAN
180 MAIDEN LANE
NEW YORK NY 10038

In re Application of	:	
Satoshi Shinada et al	:	
Application No. 10/121,358	:	ON PETITION
Filed: April 12, 2002	:	
Attorney Docket No. 524941/0009	:	

This is a decision on the petition, filed August 26, 2005, under 37 CFR 1.313(c)(2) to withdraw the above-identified application from issue after payment of the issue fee.

The petition is **GRANTED.**

The above-identified application is withdrawn from issue for consideration of a submission under 37 CFR 1.114 (request for continued examination). See 37 CFR 1.313(c)(2).

Petitioner is advised that the issue fee paid on in the above-identified application cannot be refunded. If, however, the above-identified application is again allowed, petitioner may request that it be applied towards the issue fee required by the new Notice of Allowance.[1]

Telephone inquiries should be directed to the undersigned at (571) 272-3208.

The examiner of Technology Center AU July 13, 2005 will consider the request for continued examination under 37 CFR 1.114.

Karen Creasy

Karen Creasy
Petitions Examiner
Office of Petitions
Office of the Deputy Commissioner
for Patent Examination Policy

---

[1] The request to apply the issue fee to the new Notice may be satisfied by completing and returning the new Issue Fee Transmittal Form PTOL-85(b), which includes the following language thereon: "Commissioner for Patents is requested to apply the Issue Fee and Publication Fee (if any) or re-apply any previously paid issue fee to the application identified above." Petitioner is advised that, whether a fee is indicated as being due or not, the Issue Fee Transmittal Form **must** be completed and timely submitted to avoid abandonment. Note the language in bold text on the first page of the Notice of Allowance and Fee(s) Due (PTOL-85).

UNITED STATES PATENT AND TRADEMARK OFFICE

COMMISSIONER FOR PATENTS
UNITED STATES PATENT AND TRADEMARK OFFICE
P.O. BOX 1450
ALEXANDRIA, VA 22313-1450
www.uspto.gov

Paper No. 8

Gordon E. Nelson
Patent Attorney, PC
57 Central Street
P.O. Box 782
Rowley, MA 01969

MAILED

MAY 13 2004

Technology Center 2100

In re Application of:
Ramkrishna Chatterjee et al.
Application No. 10/121,369
Filed: April 12, 2002
For: METHOD AND APPARATUS FOR REDEFINING A GROUP OF RELATED OBJECTS IN A RELATIONAL DATABASE

DECISION ON PETITION UNDER 37 CFR §1.181 TO WITHDRAW HOLDING OF ABANDONMENT

This is a decision on the petition filed 30 March 2004, supplemented by the filing of 26 April 2004 under 37 CFR §1.181 to withdraw the holding of abandonment of the above-identified application.

A Notice of Abandonment was mailed 23 March 2004 (Paper No. 5).

In support of the petition, Petitioner provides a copy of (1) a 3 page response to restriction requirement, including a certificate of facsimile transmission dated 01 December 2003 and signed by Gordon E. Nelson, (2) a delivery notice from EasyLink for a fax transmission, and (3) a personal statement under 37 CFR 1.8(b)(3) from Gordon E. Nelson.

BASIS OF OPINION

The relevant portion of the Rules are reproduced below.

37 C.F.R. § 1.8 Certificate of mailing or transmission

(b) In the event that correspondence is considered timely filed by being mailed or transmitted in accordance with paragraph (a) of this section, but not received in the Patent and Trademark Office, and the application is held to be abandoned or the proceeding dismissed, terminated, or decided with prejudice, the correspondence will be considered timely if the party who forwarded such correspondence:

(1) Informs the Office of the previous mailing or transmission of the correspondence promptly after becoming aware that the Office has no evidence of receipt of the correspondence,

(2) Supplies an additional copy of the previously mailed or transmitted correspondence and certificate, and

(3) Includes a statement which attests on a personal knowledge basis or to the satisfaction of the Commissioner to the previous timely mailing or transmission. If the correspondence was sent by facsimile transmission, a copy of the sending unit's report confirming transmission may be used to support this statement.

Petitioner has promptly informed the Office of the previous transmission, supplied a copy of the previously transmitted correspondence, and provided a statement that attests on a personal knowledge basis to the previous timely transmission of the correspondence.

Thus, Petitioner has established that a response was timely filed and the Abandonment was the result of Office error in not matching the response to the application file.

The petition is **GRANTED**. The Notice of Abandonment is **WITHDRAWN**.

The application file is being forwarded to the Technology Center support staff for entry of the amendment. After processing, the application will then be forwarded to the Examiner for appropriate action.

Any inquiry concerning this decision should be directed to Vincent N. Trans whose telephone number is (703) 305-9750.

Vincent N. Trans
Special Program Examiner
Technology Center 2100
Computer Architecture, Software, and
Information Security
703-305-9750

UNITED STATES PATENT AND TRADEMARK OFFICE

Commissioner for Patents
United States Patent and Trademark Office
P.O. Box 1450
Alexandria, VA 22313-1450
www.uspto.gov

Paper No.

Hodgson Russ LLP
David L. Principo
Suite 2000
One M&T Plaza
Buffalo NY 14203-2391

COPY MAILED
DEC 0 5 2006
OFFICE OF PETITIONS

Patent No. 6,779,999	:	LETTER REGARDING
Issue Date: August 24, 2004	:	PATENT TERM ADJUSTMENT
Application No. 10/121,371	:	AND
Filed: April 12, 2002	:	NOTICE OF INTENT TO ISSUE
Attorney Docket No.35683.0010	:	CERTIFICATE OF CORRECTION

This letter is in response to the "LETTER REGARDING PATENT TERM ADJUSTMENT PERIOD" filed August 12, 2004. Pursuant to patentees' duty of good faith and candor to the Office, patentees disclose that the Patent Term Adjustment indicated in the Issue Notification (and now on the patent) is longer than appropriate. This letter was recently forwarded to the undersigned for consideration.

The request for reconsideration of patent term adjustment indicated in the patent is **GRANTED**.

The patent term adjustment indicated in the patent is to be corrected by issuance of a certificate of correction showing a revised Patent Term Adjustment of one hundred fifty-four (154) days.

On August 24, 2004, this application matured into U.S. Patent No. 6,779,999, with a revised patent term adjustment of 173 days. Patentees disclose that the patent term adjustment calculation is based on them having filed an Amendment after Allowance on March 22, 2004; however, the Amendment was filed on March 3, 2004. Thus, the reduction should be longer.

Patentees are correct. Thus, pursuant to § 1.704(c)(10), a period of reduction of 73 days, not 54 day, should have been entered for applicant delay in filing an amendment after the mailing of the Notice of Allowance (for the period beginning on March 3, 2004 and ending on the mailing date of the Office response, May 14, 2004).

In view thereof, the patent should have issued with a revised patent term adjustment of one hundred fifty-four (154) days.

As this letter was submitted as an advisement to the Office of an error in Patentees' favor, the Office will not assess the $200.00 application fee under 37 CFR 1.705(b). The Office thanks patentees for their good faith and candor in bringing this to the attention of the Office.

The application file is being forwarded to the Certificates of Correction Branch for issuance of a certificate of correction in order to rectify this error. The Office will issue a certificate of correction indicating that the term of the above-identified patent is extended or adjusted by one hundred fifty-four (154) days.

Telephone inquiries specific to this matter should be directed to the undersigned at (571) 272-3219.

Nancy Johnson
Senior Petitions Attorney
Office of Petitions

Enclosure: Copy of DRAFT Certificate of Correction

UNITED STATES PATENT AND TRADEMARK OFFICE

CERTIFICATE OF CORRECTION

PATENT : 6,779,999 B2

DATED : August 24, 2004

INVENTOR(S) : Ciccone

DRAFT

It is certified that error appears in the above-identified patent and that said Letters Patent is hereby corrected as shown below:

On the cover page,

[*] Notice: Subject to any disclaimer, the term of this patent is extended or adjusted under 35 USC 154(b) by (173) days

Delete the phrase "by 173" and insert – by 154 days--

SPE RESPONSE FOR CERTIFICATE OF CORRECTION

Paper No.: _____

DATE : 01/11/05

TO SPE OF : ART UNIT 1624

SUBJECT : Request for Certificate of Correction on Patent No.: 6,747,031

A response is requested with respect to the accompanying request for a certificate of correction.

Please complete this form and return with file, within **7** days to:
Certificates of Correction Branch - PK 3-915
Palm location **7580** - Tel. No. 305-8309

With respect to the change(s) requested, correcting Office and/or Applicant's errors, should the patent read as shown in the certificate of correction? No new matter should be introduced, nor should the scope or meaning of the claims be changed.

Lamonte Newsome

Thank You For Your Assistance

Certificates of Correction Branch

The request for issuing the above-identified correction(s) is hereby:
Note your decision on the appropriate box.

- ☒ **Approved** — All changes apply.
- ☐ **Approved in Part** — Specify below which changes **do not** apply.
- ☐ **Denied** — State the reasons for denial below.

RYR 1-11-05

Comments:

SPE

1623
Art Unit

UNITED STATES PATENT and TRADEMARK OFFICE
UNDER SECRETARY OF COMMERCE FOR INTELLECTUAL PROPERTY AND
DIRECTOR OF THE UNITED STATES PATENT AND TRADEMARK OFFICE
WASHINGTON, D.C. 20231
WWW.USPTO.GOV

Mailed: APR - 6 2003

THM
Paper No. 4

In re Application of Zabron et al.
Serial No.: 10/121,380
Filed: April 12, 2002

DECISION ON PETITION UNDER *37 CFR 1.48(a)*

Title: CONVEYOR BELTING FOR HANDLING BAKERY GOODS

This is a decision on the PETITION TO CORRECT INVENTORSHIP IN A NON-PROVISIONAL PATENT APPLICATION filed January 29, 2003 to correct inventorship under 37 CFR 1.48(a) by adding the names of Luis E. Cediel and Claudia S. Honold to the list of inventors of the instant application.

It is noted that the applicant has met the requirements of 37 C.F.R. § 1.48(a) by (1) submitting a request to correct the inventorship that sets forth the desired inventorship change; (2) providing a statement from each person being added as an inventor that the error in inventorship occurred without deceptive intention on his or her part; (3) providing a declaration of the actual inventors as required by 37 C.F.R. § 1.63; (4) providing the processing fee set forth in 1.17(i); and, (5) providing the written consent of the assignee.

The request is **GRANTED**.

The application file is being forwarded to the appropriate section of the Patent and Trademark Office for correction of the record.

Terrel Morris
Supervisory Patent Examiner
Art Unit 1771
Technology Center 1700

David L. Principe
Hodgson Russ LLP
One M&T Plaza, Suite 2000
Buffalo, NY 14203-2391

UNITED STATES PATENT AND TRADEMARK OFFICE

Commissioner for Patents
United States Patent and Trademark Office
P.O. Box 1450
Alexandria, VA 22313-1450
www.uspto.gov

Stroock & Stroock & Lavan LLP
180 Maiden Lane
New York, NY 10038

OCT 19 2006

In re Application of:	:	
Satoshi Shinada et al.	:	DECISION ON PETITION
Serial No.: 10/121,383	:	TO RESET PERIOD FOR RESPONSE
Filed: April 12, 2002	:	
Attorney Docket No.: 524941/0010	:	

This is a decision on the petition filed on July 27, 2006 under 37 C.F.R. § 1.181 requesting remailing of Office action and restarting of period for response. There is no fee for this petition.

The petition is GRANTED-IN-PART.

A non-final Office action was mailed on February 23, 2006. Petitioner asserts that the Office action was not received by the petitioner. To support his assertion that the original Office action was not received, petitioner submitted with the petition a copy of the docket record where the nonreceived Office action would have been entered had it been received. Petitioner further states that the Office action was noted on the Image File Wrapper on July 25, 2006. Petitioner sent a copy of the Office action as Exhibit A with the petition.

The evidence is sufficient to establish that the original Office action mailed February 23, 2006 was never received. However, it is clear that petitioner had a copy of the Office action on July 27, 2006, i.e., the date the petition was filed, since a copy of the Office action was submitted with the petition.

Accordingly, the Office action will not be remailed. Instead, the period for response to the Office action is hereby reset to run three (3) months from July 27, 2006, the date the petitioner was clearly in possession of a copy of the Office action. The period for response will expire on October 27, 2006. The petitioner was notified of this decision and the resetting of the period for response by Special Programs Examiner Edward Westin via a telephone conversation on October 2, 2006. In that telephone conversation, petitioner indicated that the resetting of the period for response would provide him with sufficient time to file a response.

Any inquiries regarding this decision should be directed to Edward Westin at (571) 272-1638.

Richard K. Seidel, Director
Technology Center 2800
Semiconductors, Electrical and Optical
Systems and Components

UNITED STATES PATENT AND TRADEMARK OFFICE

UNDER SECRETARY OF COMMERCE FOR INTELLECTUAL PROPERTY AND
DIRECTOR OF THE UNITED STATES PATENT AND TRADEMARK OFFICE
WASHINGTON, DC 20231
www.uspto.gov

JAN 28 2003

Paper No. 4

In re Application of	:	
John L. Janning	:	
Serial No. 10/121,385	:	DECISION ON PETITION
Filed: April 12, 2002	:	TO MAKE SPECIAL
For: THERMALLY ACTIVATED DOLL	:	

Applicant's petition, filed December 17, 2002, requests that this application be rendered special for examination in that applicant is over sixty-five (65) years of age.

The petition has been reviewed and is found to be in compliance with the requirements for special status as set forth in Section 708.02(IV) of the Manual of Patent Examining Procedure (MPEP).

PETITION GRANTED.

E. Rollins-Cross, Director
Technology Center 3700

R. William Graham
22 S. St. Clair Street
Dayton, OH 45402

UNITED STATES PATENT AND TRADEMARK OFFICE

Commissioner for Patents
United States Patent and Trademark Office
P.O. Box 1450
Alexandria, VA 22313-1450
www.uspto.gov

THOMSON LICENSING INC
PATENT OPERATIONS
PO BOX 5312
PRINCETON NJ 08543

COPY MAILED

JUN 27 2006

OFFICE OF PETITIONS

In re Application of	:	
Louis Robert Litwin	:	
Application No. 10/121,404	:	ON PETITION
Filed: April 12, 2002	:	
Attorney Docket No. PU020062	:	

This is a decision on the petition under 37 CFR 1.137(b), filed June 7, 2006, to revive the above-identified application.

The petition is **DISMISSED**.

Any request for reconsideration of this decision must be submitted within TWO (2) MONTHS from the mail date of this decision. Extensions of time under 37 CFR 1.136(a) are permitted. The reconsideration request should include a cover letter entitled "Renewed Petition Under 37 CFR 1.137(b)." There is no fee for the renewed petition. This is **not** a final agency decision within the meaning of 5 USC 704.

The above-identified application became abandoned for failure to timely file a proper response to the final Office action mailed April 22, 2005, which set a shortened statutory period for reply of three (3) months. No extensions of time under the provisions of 37 CFR 1.136(a) were obtained. Accordingly, the above-identified application became abandoned on July 23, 2005. A Notice of Abandonment was mailed on May 4, 2006.

A grantable petition under 37 CFR 1.137(b) must be accompanied by: (1) the required reply, unless previously filed; (2) the petition fee as set forth in 37 CFR 1.17(m); (3) a statement that the entire delay in filing the required reply from the due date for the reply until the filing of a grantable petition pursuant to 37 CFR 1.137(b) was unintentional; and (4) any terminal disclaimer (and fee as set forth in 37 CFR 1.20(d)) required by 37 CFR 1.137(d).

The instant petition lacks item (1), the required reply.

With the instant petition, petitioner filed an amendment in reply to the final Office action. However, the examiner has determined that the amendment did not *prima facie* place the application in condition for allowance. On renewed petition, petitioner must submit a proper reply in response to the final Office action. The proposed reply to a final Office action required for consideration of a petition to revive must be either (1) a Notice of Appeal (and fee required by law); (2) an amendment that *prima facie* places the application in condition for allowance; (3) the filing of a continuing application under 37 CFR 1.53(b) or if applicable, 1.53(d); or (4) a request for a continuing examination (RCE) under 37 CFR 1.114.

Further correspondence with respect to this matter should be addressed as follows:

By mail: Mail Stop Petitions
Commissioner for Patents
P.O. Box 1450
Alexandria VA 22313-1450

By FAX: (571)273-8300
Attn: Office of Petitions

Telephone inquiries concerning this decision should be directed to the undersigned at (571)272-3207.

Cliff Congo
Petitions Attorney
Office of Petitions

UNITED STATES PATENT AND TRADEMARK OFFICE

Commissioner for Patents
United States Patent and Trademark Office
P.O. Box 1450
Alexandria, VA 22313-1450
www.uspto.gov

THOMSON LICENSING INC
PATENT OPERATIONS
PO BOX 5312
PRINCETON NJ 08543

COPY MAILED

DEC 28 2006

OFFICE OF PETITIONS

In re Application of	:	
Louis Robert Litwin	:	
Application No. 10/121,404	:	ON PETITION
Filed: April 12, 2002	:	
Attorney Docket No. PU020062	:	

This is a decision on the petition under 37 CFR 1.137(b), filed September 21, 2006, to revive the above-identified application.

The petition is **GRANTED**.

The above-identified application became abandoned for failure to timely file a proper response to the final Office action mailed April 22, 2005, which set a shortened statutory period for reply of three (3) months. No extensions of time under the provisions of 37 CFR 1.136(a) were obtained. Accordingly, the above-identified application became abandoned on July 23, 2005. A Notice of Abandonment was mailed on May 4, 2006. Applicant filed a petition to revive under 37 CFR 1.137(b) on June 7, 2006. However, the petition was dismissed in a decision mailed on June 27, 2006. The amendment submitted with the petition did not place the application in condition for allowance.

With the instant petition, applicant submitted a proper reply in the form of an RCE.

Applicant's deposit account was charged the $1,500 petition fee for the renewed petition. As the petition fee was previously paid on June 7, 2006, $1,500 has been refunded to Deposit Account No. 07-0832.

The matter is being forwarded to Group Art Unit 2617 for consideration of the RCE, filed September 21, 2006.

Telephone inquiries concerning this decision should be directed to the undersigned at (571)272-3207.

Cliff Congo
Petitions Attorney
Office of Petitions

SPE RESPONSE FOR CERTIFICATE OF CORRECTION

Paper No.: _____

DATE : 4/14/05

TO SPE OF : ART UNIT 3732

SUBJECT : Request for Certificate of Correction on Patent No.: 6811398 B2

A response is requested with respect to the accompanying request for a certificate of correction.

Please complete this form and return with file, within **7** days to:
Certificates of Correction Branch - PK 3-915
Palm location **7580** - Tel. No. 305-8309

With respect to the change(s) requested, correcting Office and/or Applicant's errors, should the patent read as shown in the certificate of correction? No new matter should be introduced, nor should the scope or meaning of the claims be changed.

Virginia Tolbert
Certificates of Correction Branch

Thank You For Your Assistance

The request for issuing the above-identified correction(s) is hereby:
Note your decision on the appropriate box.

- ☒ **Approved** — **All** changes apply.
- ☐ **Approved in Part** — Specify below which changes **do not** apply.
- ☐ **Denied** — State the reasons for denial below.

Comments:

SPE

3732
Art Unit

UNITED STATES PATENT AND TRADEMARK OFFICE

COMMISSIONER FOR PATENTS
UNITED STATES PATENT AND TRADEMARK OFFICE
P.O. BOX 1450
ALEXANDRIA, VA 22313-1450
WWW.USPTO.GOV

Paper No. None

Michelle B. Lando, Esq.
CABOT CORPORATION
Law Department
157 Concord Road
Billerica MA 01821

COPY MAILED
SEP 1 1 2006
OFFICE OF PETITIONS

In re Application of	:	
Melanie G. Lamprey et al.	:	
Application No. 10/121,418	:	
Filed: April 12, 2002	:	DECISION ON PETITION
Attorney Docket No. 01094	:	UNDER 37 C.F.R. §1.137(B)
Title: PROCESS FOR PREPARING	:	
MODIFIED PIGMENTS	:	

This is a decision on the petition filed June 9, 2006, pursuant to 37 C.F.R. §1.137(b)[1], to revive the above-identified application.

The above-identified application became abandoned for failure to reply within the meaning of 37 C.F.R §1.113 in a timely manner to the final Office action mailed June 21, 2005, which set a shortened statutory period for reply of three months. An after-final amendment was received on December 2, 2005 along with a three-month extension of time, and an advisory action was mailed on December 20, 2005. No additional extensions of time under the provisions of 37 C.F.R §1.136(a) were obtained, and no further

1 A grantable petition pursuant to 37 C.F.R §1.137(b) must be accompanied by:
(1) The reply required to the outstanding Office action or notice, unless previously filed;
(2) The petition fee as set forth in § 1.17(m);
(3) A statement that the entire delay in filing the required reply from the due date for the reply until the filing of a grantable petition pursuant to this paragraph was unintentional. The Commissioner may require additional information where there is a question whether the delay was unintentional, and;
(4) Any terminal disclaimer (and fee as set forth in § 1.20(d)) required pursuant to paragraph (d) of this section.

responses were received. Accordingly, the above-identified application became abandoned on December 22, 2005. A notice of abandonment was mailed on May 31, 2006.

With the present petition, Petitioner has submitted the petition fee, along with the associated fee and the proper statement of unintentional delay. Petitioner has further included a Request for Continued Examination (RCE) under 37 C.F.R. §1.114 and the associated fee.

No terminal disclaimer is required. The RCE has been accepted as the required reply under 37 C.F.R. §1.137(b)(1). The previously submitted amendment of December 2, 2005 shall serve as the required submission.

As such, the petition under 37 C.F.R. §1.137(b) is **GRANTED**.

The Technology Center will be notified of this decision. The Technology Center's support staff will notify the Examiner of this decision, so that the amendment of December 2, 2005 can be processed.

Telephone inquiries regarding *this decision* should be directed to the undersigned at (571) 272-3225[2]. All other inquiries concerning examination procedures or status of the application should be directed to the Technology Center.

Paul Shanoski
Senior Attorney
Office of Petitions
United States Patent and Trademark Office

---

2 Petitioner will note that all practice before the Office should be in writing, and the action of the Office will be based exclusively on the written record in the Office. See 37 C.F.R. §1.2. As such, Petitioner is reminded that no telephone discussion may be controlling or considered authority for Petitioner's further action(s).

UNITED STATES PATENT AND TRADEMARK OFFICE

COMMISSIONER FOR PATENTS
UNITED STATES PATENT AND TRADEMARK OFFICE
P.O. BOX 1450
ALEXANDRIA, VA 22313-1450
www.uspto.gov

IPLM GROUP, P.A.
POST OFFICE BOX 18455
MINNEAPOLIS, MN 55418

COPY MAILED

DEC 30 2004

OFFICE OF PETITIONS

ON PETITION

In re Application of :
Gregory G. Griese, et al. :
Application No. 10121,440 :
Filed: April 10, 2002 :
Attorney Docket No. 117P45US01 :

This is a decision on the petition, filed December 17, 2004, under 37 CFR 1.313(c)(2) to withdraw the above-identified application from issue after payment of the issue fee.

The petition is **GRANTED**.

The above-identified application is withdrawn from issue for consideration of a submission under 37 CFR 1.114 (request for continued examination). See 37 CFR 1.313(c)(2).

Petitioner is advised that the issue fee paid on June 14, 2004, in the above-identified application cannot be refunded. If, however, the above-identified application is again allowed, petitioner may request that it be applied towards the issue fee required by the new Notice of Allowance. [1]

Telephone inquiries relating to this decision should be directed to the undersigned at (571) 272-3204.

The application is being referred to Technology Center AU 3744 for further processing of the request for continued examination under 37 CFR 1.114 filed December 17, 2004.

Sherry D. Brinkley
Petitions Examiner
Office of Petitions
Office of the Deputy Commissioner
for Patent Examination Policy

[1]The request to apply the issue fee to the new Notice may be satisfied by completing and returning the new Issue Fee Transmittal Form PTOL-85(b), which includes the following language thereon: "Commissioner for Patents is requested to apply the Issue Fee and Publication Fee (if any) or re-apply any previously paid issue fee to the application identified above." Petitioner is advised that, whether a fee is indicated as being due or not, the Issue Fee Transmittal Form **must** be completed and timely submitted to avoid abandonment. Note the language in bold text on the first page of the Notice of Allowance and Fee(s) Due (PTOL-85).

UNITED STATES PATENT AND TRADEMARK OFFICE

UNITED STATES DEPARTMENT OF COMMERCE
United States Patent and Trademark Office
Address: COMMISSIONER FOR PATENTS
P.O. Box 1450
Alexandria, Virginia 22313-1450
www.uspto.gov

APPLICATION NO.	FILING DATE	FIRST NAMED INVENTOR	ATTORNEY DOCKET NO.	CONFIRMATION NO.
10/121,453	04/12/2002	Robert G. Lindquist	SP01-092	2204

7590 05/06/2004

Price, Heneveld, Cooper, DeWitt & Litton
695 Kenmoor, S.E.
Post Office Box 2567
Grand Rapids, MI 49501

EXAMINER
HANIG, RICHARD E

ART UNIT	PAPER NUMBER
2873	

DATE MAILED: 05/06/2004

Please find below and/or attached an Office communication concerning this application or proceeding.

UNITED STATES DEPARTMENT OF COMMERCE
United States Patent and Trademark Office

Address: COMMISSIONER OF PATENTS AND TRADEMARKS
Washington, D.C. 20231

APPLICATION NUMBER	FILING DATE	FIRST NAMED APPLICANT	ATTORNEY DOCKET NO.
10121453			

EXAMINER

ART UNIT	PAPER NUMBER

DATE MAILED:

NOTICE OF ABANDONMENT

This application is abandoned in view of:

☐ Applicant's failure to timely file a proper reply to the Office letter mailed on _____.

☐ A reply (with Certificate of Mailing or Transmission of _____) was received on _____ which is after the expiration of the period for reply (including a total extension of time of _____ month(s)) which expired on _____.

☐ A proposed reply was received on _____ , but it does not constitute a proper reply under 37 CFR 1.113 to the final rejection.
(A proper reply under 37 CFR 1.113 to a final rejection consists only of: (1) a timely filed amendment which places the application in condition for allowance; (2) a timely filed Notice of Appeal (with appeal fee); or (3) a timely filed Request for Continued Examination (RCE) in compliance with 37 CFR 1.114).

☐ A reply was received on _____ , but it does not constitute a proper reply, or a *bona fide* attempt at a proper reply, to the non-final rejection. See 37 CFR 1.85(a) and 1.111. (See explanation in the last box below).

☐ No reply has been received.

☒ Applicant's failure to timely pay the required issue fee and publication fee, if applicable, within the statutory period of three months from the mailing date of the Notice of Allowance (PTOL-85).

☐ The issue fee and publication fee, if applicable, was received on _____ (with a Certificate of Mailing or Transmission dated _____), which is after the expiration of the statutory period for payment of the issue fee (and publication fee) set in the Notice of Allowance (PTOL-85)(or Notice of Publication Fee Due).

☐ The submitted fee of $_____ is insufficient. A balance of $ _____ is due.
The issue fee by 37 CFR 1.18 is $_____ . The publication fee, if required, by 37 CFR 1.18(d) is $_____.

☒ The issue fee and publication fee, if applicable, have not been received.

☐ Applicant's failure to timely file corrrected drawings as required by, and within the three-month period set in, the Notice of Allowability (PTOL-37).

☐ Proposed corrected drawings were received on _____ (with a Certificate of Mailing or Transmission dated _____), which is after the expiration of the period for reply.

☐ No corrected drawings have been received.

☐ The letter of express abandonment which is signed by the attorney or agent of record, the assignee of the entire interest, or all the applicants.

☐ The letter of express abandonment which is signed by an attorney or agent (acting in a representative capacity under 37 CFR 1.34(a)) upon filing of a continuing application.

☐ The decision by the Board of Patent Appeals and Interferences rendered on _____ and because the period for seeking court review of the decision has expired and there are no allowed claims.

☐ The reason(s) below: _____

Petitions to revive under 37 CFR 1.137(a) or (b), or requests to withdraw the holding of abandonment under 37 CFR 1.181, should be promptly filed to minimize any negative effects on patent term.

UNITED STATES PATENT AND TRADEMARK OFFICE

Commissioner for Patents
United States Patent and Trademark Office
P.O. Box 1450
Alexandria, VA 22313-1450
www.uspto.go

TEXAS INSTRUMENTS INCORPORATED
P O BOX 655474, M/S 3999
DALLAS TX 75265

COPY MAILED

DEC 0 4 2006

OFFICE OF PETITIONS

In re Application of	:	
McDonough et al.	:	
Application No. 10/121,467	:	DECISION ON PETITION
Filed: April 11, 2002	:	
Attorney Docket No. TI-31686	:	

This is a decision on the petition under 37 CFR 1.137(b), filed October 23, 2006, to revive the above-identified application.

This above-identified application became abandoned for failure to timely file a reply to a non-final Office Action mailed March 23, 2006. The non-final Office Action set a three (3) month shortened statutory period for reply. No extensions of time were obtained under the provisions of 37 CFR 1.136(a). Accordingly, this application became abandoned on June 24, 2006. A Notice of Abandonment was mailed on October 18, 2006.

This petition is hereby **GRANTED**.

This application is being forwarded to Technology Center 2600 for further processing.

Telephone inquiries concerning this matter should be directed to the undersigned at (571) 272-3215.

Charlema R. Grant

Charlema R. Grant
Petitions Attorney
Office of Petitions

UNITED STATES PATENT AND TRADEMARK OFFICE

Commissioner for Patents
United States Patent and Trademark Office
P.O. Box 1450
Alexandria, VA 22313-1450
www.uspto.gov

TEXAS INSTRUMENTS INCORPORATED
P O BOX 655474, M/S 3999
DALLAS TX 75265

COPY MAILED

MAR 26 2008

OFFICE OF PETITIONS

In re Application of
John G. McDonough et al.
Application No. 10/121,467
Filed: April 11, 2002
Attorney Docket No. **TI-31686**

DECISION ON PETITION

This is a decision on the petition under the unintentional provisions of 37 CFR 1.137(b), filed October 05, 2007, to revive the above-identified application.

The petition is **GRANTED**.

The application became abandoned for failure to reply in a timely manner to the non-final Office action mailed, December 22, 2006, which set a shortened statutory period for reply of three (3) months. No extensions of time under the provisions of 37 CFR 1.136(a) were obtained. Accordingly, the application became abandoned on March 23, 2007.

The petition satisfies the requirements of 37 CFR 1.137(b) in that petitioner has supplied (1) the reply in the form of a amendment, (2) the petition fee of 1,540, and (3) an adequate statement of unintentional delay.

37 CFR 1.137(b)(3) requires a statement that "the entire delay in filing the required reply from the due date for the reply until the filing of a grantable petition pursuant to 37 CFR 1.137(b) was unintentional." Since the statement appearing in the petition varies from the language required by 37 CFR 1.137(b)(3), the statement is being construed as the required statement. Petitioner must notify the Office if this is **not** a correct reading of the statement appearing in the petition.

Telephone inquiries concerning this decision should be directed to Tredelle Jackson at (571) 272-2783.

This application is being referred to Technology Center AU 2616 for appropriate action by the Examiner in the normal course of business on the reply received.

David Bucci
Petitions Examiner
Office of Petitions

UNITED STATES PATENT AND TRADEMARK OFFICE

Commissioner for Patents
United States Patent and Trademark Office
P.O. Box 1450
Alexandria, VA 22313-1450
www.uspto.gov

TEXAS INSTRUMENTS INCORPORATED
PO BOX 655474, M/S 3999
DALLAS TX 75265

MAILED

JUN 02 2010

OFFICE OF PETITIONS

In re Application of :
John G. McDonough et al :
Application No. 10/121,467 : DECISION ON PETITION
Filed: April 11, 2002 :
Attorney Docket No. TI-31686 :

This is a decision on the petition under the unintentional provisions of 37 CFR 1.137(b), filed March 29, 2010, to revive the above-identified application.

The petition is **GRANTED**.

The petition satisfies the conditions for revival pursuant to the provisions of 37 CFR 1.137(b) in that (1) the reply in the form of an amendment; (2) the petition fee; and (3) the required statement of unintentional delay have been received. Accordingly, the reply to the nonfinal rejection mailed August 13, 2009, is accepted as having been unintentionally delayed.

Telephone inquiries concerning this decision should be directed to the undersigned at (571) 272-3208.

This application is being referred to Technology Center AU 2471 for appropriate action by the Examiner in the normal course of business on the reply received March 29, 2010.

/KOC/
Karen Creasy
Petitions Examiner
Office of Petitions

UNITED STATES PATENT AND TRADEMARK OFFICE

COMMISSIONER FOR PATENTS
UNITED STATES PATENT AND TRADEMARK OFFICE
WASHINGTON, D.C. 20231
www.uspto.gov

Paper No. 5

MILLS & ONELLO LLP
Suite 605
Eleven Beacon Street
Boston, MA 02108

COPY MAILED

SEP 2 4 2002

OFFICE OF PETITIONS

In re Application of
Sami Daoud
Application No.10/121,473
Filed: April 12, 2002
Attorney Docket Number: TSC-0011CIP

DECISION REFUSING STATUS
UNDER 37 C.F.R. §1.47(b)

This is in response to the petition under 37 C.F.R. §1.47(b), filed August 12, 2002.

Rule 47 applicant is given **TWO MONTHS** from the mailing date of this decision to reply, correcting the below-noted deficiencies. Any reply should be entitled "Request for Reconsideration of Petition Under 37 C.F.R. §1.47(b)," and should only address the deficiencies noted below, except that the reply may include an oath or declaration executed by the non-signing inventor. **Failure to respond will result in abandonment of the application**. Any extensions of time will be governed by 37 C.F.R. §1.136(a).

The above-identified application was filed on April 12, 2002, without an executed oath or declaration, and naming Sami Daoud as the sole inventor. Accordingly, on May 16, 2002, a Notice to File Missing Parts of Application - Filing Date Granted was mailed, requiring applicant to submit for the purposes of this decision an executed oath or declaration, and pay a surcharge for late filing. The Notice set an extendable two month period for reply.

In reply, applicant filed a one (1) month extension of time, the instant petition and fee and the surcharge for late filing of the declaration. Accompanying the petition is the employment contract of inventor Daoud, statement of facts, statement of proprietary interest, assignment documents from parent application and correspondence mailed to inventor Daoud.

A grantable petition under 37 C.F.R. §1.47(b) requires: (1) proof that the non-signing inventor cannot be reached or refuses to sign the oath or declaration; (2) an acceptable oath or declaration in compliance with 35 U.S.C. §§ 115 and 116; (3) the petition fee; (4) a statement of last known address of the non-signing inventor; (5) proof of proprietary interest; and (6) a showing that such action is necessary to preserve the rights of parties or to prevent irreparable damage. Rule 47 applicant has failed to meet requirement (2).

As to item (2), Applicant failed to submit an executed oath or declaration that is in compliance with 37 CFR 1.63 (a)(4)[1], (b)(1)[2], (b)(2)[3], and (b)(3)[4]. The granting of 47

---

[1] 1.63 Oath or declaration.
(a) An oath or declaration filed under § 1.51(b)(2) as a part of a nonprovisional application must:
(4)State that the person making the oath or declaration believes the named

status requires a rule 47 (b) applicant to make the oath required by 37 CFR §1.63 and §1.64. Thus, the declaration or oath must still meet the requirements of 37 CFR 1.63. Where applicant is a corporation, an officer of the corporation normally is required to execute the oath or declaration. The declaration must state the full name, residence, post office address, and citizenship of the non-signing inventor. The title or position of the person signing must also be stated if signing on behalf of a corporation under 37 CFR §1.47(b). See MPEP 409.03(b).

Further correspondence with respect to this matter should be addressed as follows:

By mail: Assistant Commissioner for Patents
Box DAC
Washington, D.C. 20231

By FAX: (703) 308-6916
Attn: Office of Petitions

By hand: Crystal Plaza Four, Suite 3C23
2201 S. Clark Place
Arlington, VA 22202

Telephone inquiries regarding this decision should be directed to Petitions Attorney Charlema R. Grant at (703) 305-0309.

Beverly M. Flanagan
Supervisory Petitions Examiner
Office of Petitions
Office of the Deputy Commissioner
for Patent Examination Policy

---

inventor or inventors to be the original and first inventor or inventors of the subject matter which is claimed and for which a patent is sought.

[2](b) In addition to meeting the requirements of paragraph (a) of this section, the oath or declaration must also:
(1) Identify the application to which it is directed;

[3] (2) State that the person making the oath or declaration has reviewed and understands the contents of the application, including the claims, as amended by any amendment specifically referred to in the oath or declaration; and

[4] (3) State that the person making the oath or declaration acknowledges the duty to disclose to the Office all information known to the person to be material to patentability as defined in § 1.56.

UNITED STATES PATENT AND TRADEMARK OFFICE

COMMISSIONER FOR PATENTS
UNITED STATES PATENT AND TRADEMARK OFFICE
WASHINGTON, D.C. 20231
www.uspto.gov

Paper No. 9

MILLS & ONELLO LLP
Suite 605
Eleven Beacon Street
Boston, MA 02108

COPY MAILED

NOV 0 8 2002

OFFICE OF PETITIONS

In re Application of
Sami Daoud
Application No.10/121,473
Filed: April 12, 2002
Attorney Docket Number: TSC-0011CIP

DECISION ACCORDING STATUS
UNDER 37 C.F.R. §1.47(b)

This is in response to the renewed petition for status under 37 C.F.R. §1.47(b), filed October 30, 2002.

The petition is **GRANTED**.

The above-identified application was filed on April 12, 2002, without an executed oath or declaration, and naming Sami Daoud as the sole inventor. Accordingly, on May 16, 2002, a Notice to File Missing Parts of Application - Filing Date Granted was mailed, requiring applicant to submit for the purposes of this decision an executed oath or declaration, and pay a surcharge for late filing. The Notice set an extendable two month period for reply. A petition under 37 CFR 1.47(b) was dismissed on September 24, 2002.

In response, on August 12, 2002, and supplemented on October 30, 2002 applicant filed:

- statement of facts,
- assignment document of parent application executed by non-signing inventor,
- correspondence with non-signing inventor,
- employment agreement between Textron Systems and Sami Dauod,
- declaration and power of attorney signed by Lesley Hamlin, Assistant Secretary of Textron Systems Corporation (assignee),
- the surcharge under 1.16(e)for late filing, and
- a petition (and fee) under §1.47(b).

Applicant has satisfied the requirements of §1.47(b)[1]. Applicant, by declaration of persons with first hand knowledge and documentary evidence, demonstrated that the non-signing inventor had been presented with a copy of the application papers for signature and that he has refused by his conduct to sign the declaration. Applicant submitted a declaration signed by Lesley Hamlin, Assistant Secretary of Textron Systems Corporation (assignee), . This declaration has been reviewed and is found in compliance with 1.63 and 1.64. Applicant paid the petition fee and included a statement of the non-signing inventor's last known address in the petition. The employment agreement and documents which establish the chain of ownership establish the applicant's proprietary interest in the application.

---

[1] A grantable petition under 37 C.F.R. §1.47(b) requires: (1) proof that the non-signing inventor cannot be reached or refuses to sign the oath or declaration; (2) an acceptable oath or declaration; (3) the petition fee; (4) a statement of last known address of the non-signing inventor; (5) proof of proprietary interest; and (6) proof of irreparable damage.

This application is hereby accorded Rule 1.47(b) status.

As provided in Rule 1.47(c), this Office will forward notice of this application's filing to the non-signing inventor at the address given in the petition. Notice of the filing of this application will also be published in the Official Gazette.

The application file is being forwarded to the Office of Initial Patent Examination for further processing of the application.

Telephone inquiries regarding this decision should be directed to Petitions Attorney Charlema R. Grant at (703) 306-0251.

Nancy Johnson for

Beverly M. Flanagan
Supervisory Petitions Examiner
Office of Petitions
Office of the Deputy Commissioner
for Patent Examination Policy

UNITED STATES PATENT AND TRADEMARK OFFICE

COMMISSIONER FOR PATENTS
UNITED STATES PATENT AND TRADEMARK OFFICE
WASHINGTON, D.C. 20231
www.uspto.gov

Sami Daoud
5 Scott Road
Bedford, NH 03110

COPY MAILED

NOV 0 8 2002

OFFICE OF PETITIONS

In re Application of
Sami Daoud
Application No.10/121,473
Filed: April 12, 2002
Attorney Docket Number: TSC-0011CIP
Title of Invention: CONSTANT OUTPUT HIGH-PRECISION MICROCAPILLARY PYROTECHNIC INITIATOR

LETTER

Dear Mr. Daoud:

You are named as the sole inventor in the above-identified United States patent application filed under the provisions of 35 U.S.C. 118 (United States Code) and 37 CFR 1.47(b). Should a patent be granted on the application you will be designated therein as the sole inventor.

As the named inventor you are entitled to inspect any paper in the file wrapper of the application, order copies of all or any part thereof (at a prepaid cost per 37 CFR 1.19) or make your position of record in the application. Alternatively, you may arrange to do any of the preceding through a registered patent attorney or agent presenting written authorization from you. If you care to join the application, counsel of record (see below) would presumably assist you. Joining in the application would entail the filing of an appropriate oath or declaration by you pursuant to 37 CFR 1.63.

Telephone inquiries regarding this communication should be directed to Petitions Attorney Charlema R. Grant at (703) 306-0251. Requests for information regarding your application should be directed to the File Information Unit at (703) 308-2733. Information regarding how to pay for and order a copy of the application, or a specific paper in the application, should be directed to Certification Division at (703) 308-9726 or 1-800-972-6382 (outside the Washington D.C. area).

Beverly M. Flanagan
Supervisory Petitions Examiner
Office of Petitions
Office of the Deputy Commissioner
for Patent Examination Policy

Anthony Onello, Jr.
MILLS & ONELLO LLP
Suite 605
Eleven Beacon Street
Boston MA 02108

UNITED STATES PATENT AND TRADEMARK OFFICE

Commissioner for Patents
United States Patent and Trademark Office
P.O. Box 1450
Alexandria, VA 22313-1450
www.uspto.gov

Paper No. 5

ALZA CORPORATION
P O BOX 7210
INTELLECTUAL PROPERTY DEPARTMENT
MOUNTAIN VIEW CA 94039-7210

COPY MAILED

MAY 1 2 2004

OFFICE OF PETITIONS

In re Application of
Su Il Yum et al.
Application No. 10/121,478
Filed: April 9, 2002
Atty Docket No. ARC 2308N2

ON PETITION

This is a decision on the petition under 37 CFR 1.137(b),[1] filed April 6, 2004, by facsimile transmission, to revive the above-identified application.

The petition under 37 CFR 1.137(b) is **GRANTED**.

The application became abandoned on July 18, 2002, for failure to timely file a response to the Notice to File Missing Parts of Nonprovisional Application mailed May 17, 2002, which set a two (2) month period for reply. A Notice of Abandonment was mailed January 6, 2004.

---

[1]Effective December 1, 1997, the provisions of 37 CFR 1.137(b) now provide that where the delay in reply was unintentional, a petition may be filed to revive an abandoned application or a lapsed patent pursuant to 37 CFR 1.137(b). A grantable petition filed under the provisions of 37 CFR 1.137(b) must be accompanied by:

(1) the required reply, unless previously filed. In a nonprovisional application abandoned for failure to prosecute, the required reply may be met by the filing of a continuing application. In a nonprovisional application filed on or after June 8, 1995, and abandoned for failure to prosecute, the required reply may also be met by the filing of a request for continued examination in compliance with § 1.114. In an application or patent, abandoned or lapsed for failure to pay the issue fee or any portion thereof, the required reply must be the payment of the issue fee or any outstanding balance thereof.

(2) the petition fee as set forth in 37 CFR 1.17(m);

(3) a statement that the entire delay in filing the required reply from the due date for the reply until the filing of a grantable petition pursuant to 37 CFR 1.137(b) was unintentional. The Commissioner may required additional information where there is a question whether the delay was unintentional; and

(4) any terminal disclaimer (and fee as set forth in 37 CFR 1.20(d)) required pursuant to 37 CFR 1.137©)).

Receipt of the filing fees and late filing fee surcharge are hereby acknowledged. Notice is being taken however that since no timely response to the "Notice" regarding page 35 of the specification having been omitted, that the applicants constructively elected option (iii) and that the application as filed, without page 35, will proceed.

All other requirements having been met, this application is being forwarded to the Office of Initial Patent Examination for further pre-examination processing.

Telephone inquiries related to this decision should be directed to the undersigned Petitions Attorney at (703) 305-4497.

Patricia Faison-Ball

Patricia Faison-Ball
Senior Petitions Attorney
Office of Petitions

UNITED STATES PATENT AND TRADEMARK OFFICE

COMMISSIONER FOR PATENTS
UNITED STATES PATENT AND TRADEMARK OFFICE
P.O. BOX 1450
ALEXANDRIA, VA 22313-1450
www.uspto.gov

Brouse McDowell
A Legal Professional Association
388 South Main Street – Suite 500
Akron, OH 44311

COPY MAILED
OCT 13 2005
OFFICE OF PETITIONS

In re Application of	:	
Axel Schaedler	:	
Application No. 10/121,486	:	ON PETITION
Filed: April 12, 2004	:	
Attorney Docket No. 0267.1954	:	

This is a decision on the petition under 37 CFR 1.137(b), filed July 11, 2005, to revive the above-identified application.

The petition is **GRANTED**.

The petition satisfies the requirements of 37 CFR 1.137(b) in that petitioner has supplied (1) the reply in the form of a Request for Continued Examination (RCE) under 37 CFR 1.114, with the $790 filing fee; (2) the petition fee of $1,500; and (3) an adequate statement of unintentional delay.

This application is being revived for consideration of the RCE.

The Change of Correspondence Address filed July 11, 2005 has been made of record.

The application file is being referred to Technology Center Art Unit 3618.

Telephone inquiries concerning this decision should be directed to the undersigned at (571) 272-3226.

Andrea Smith
Petitions Examiner
Office of Petitions

UNITED STATES PATENT AND TRADEMARK OFFICE

COMMISSIONER FOR PATENTS
UNITED STATES PATENT AND TRADEMARK OFFICE
WASHINGTON, D.C. 20231
www.uspto.gov

Paper No. 7

Norman R. Klivans
SKJERVEN MORRILL LLP
25 Metro Drive, Suite 700
San Jose, CA 95110

DEC 24 2002

In re Application of:	:	
Lee *et al.*	:	
Application No. 10/121,515	:	DECISION ON REQUEST TO
Filed: April 12, 2002	:	WITHDRAW FROM RECORD
Attorney Docket No. AB-1187 US	:	

This is a decision on the request to withdraw as attorney of record under 37 C.F.R. § 1.36, filed November 27, 2002.

A grantable request to withdraw as attorney of record must be signed by every attorney seeking to withdraw or contain a clear indication that one attorney is signing on behalf of the others. A request to withdraw will not be approved unless at least thirty (30) days would remain between the date of approval and the later of the expiration date of a time to file a response or the expiration date of the maximum time period which can be extended under 37 C.F.R. § 1.136(a).

The request meets all the above stated requirements. The request was signed by Norman Klivans on behalf of all attorneys of record and there is no outstanding Office action requiring a response by the applicant. Accordingly, the request is **approved.**

There is no attorney of record at this time.

As indicated in the request, all future communications from the Office will be directed to John Castellano at the below-listed address until otherwise notified by applicant.

Inquiries related to this decision should be directed to Ed Glick at (703) 308-4858.

Edward J. Glick, Special Programs Examiner
Technology Center 2800
Semiconductors, Electrical and Optical
Systems and Components

cc: Mr. John Castellano
Harness, Dickey & Pierce
12355 Sunrise Valley Drive, Suite 350
Reston, VA 20191

UNITED STATES PATENT and TRADEMARK OFFICE

COMMISSIONER FOR PATENTS
UNITED STATES PATENT AND TRADEMARK OFFICE
P.O. BOX 1450
ALEXANDRIA, VA 23313-1450
WWW.USPTO.GOV

Mailed: 11/1/05

DWW
Paper No. _____

In re Application of
Abuelyaman et al.
Serial No.: 10/121,518
Filed: April 12, 2002

DECISION ON PETITION UNDER *37 CFR 1.48(b)*

For: GEL MATERIALS, MEDICAL ARTICLES, AND METHODS

This is a decision on the request for CORRECTION OF INVENTORSIP UNDER 37 C.F.R. 1.48(b) (herein treated as PETITION TO DELETE CORRECTLY NAMED PERSON WHO IS NOT INVENTOR OF INVENTION NOW BEING CLAIMED) filed September 23, 2005 to correct inventorship under 37 CFR 1.48(b) by deleting the name of Duane Fansler from the list of inventors of the instant application.

It is noted that the applicant has met the requirements of (1) a petition including a statement identifying each named inventor who is being deleted and acknowledging that the inventor's invention is no longer being claimed in the application; and (2) the fee set forth in 37 CFR 1.17(i).

The petition is **GRANTED**.

The application file is being forwarded to the appropriate section of the Patent and Trademark Office for correction of the record.

David W. Wu
Supervisory Patent Examiner
Art Unit 1713
Technology Center 1700

Office of Intellectual Property Counsel
3M Innovative Properties Company
PO Box 33427
St. Paul MN 55133-3427

Under the Paperwork Reduction Act of 1995, no persons are required to respond to a collection of information unless it displays valid OMB control number.

PETITION TO ACCEPT UNINTENTIONALLY DELAYED PAYMENT OF MAINTENANCE FEE IN AN EXPIRED PATENT (37 CFR 1.378(c))

Patent Number	Issue Date (YYYY-MM-DD)	Application Number	Filing Date (YYYY-MM-DD)	Docket Number (if applicable)
6,669,254	2003-12-30	10/121,526	2002-04-12	F0116

CAUTION: Maintenance fee (and surcharge, if any) payment must correctly identify: (1) the patent number and (2) the application number of the actual U.S. application leading to issuance of that patent to ensure the fee(s) is/are associated with the correct patent. 37 CFR 1.366(c) and (d).

SMALL ENTITY
☒ Patentee claims, or has previously claimed, small entity status. See 37 CFR 1.27.

LOSS OF ENTITLEMENT TO SMALL ENTITY STATUS
☐ Patentee is no longer entitled to small entity status. See 37 CFR 1.27(g)

NOT Small Entity		Small Entity	
Fee	Code	Fee	Code
○ 3 ½ year	(1551)	◉ 3 ½ year	(2551)
○ 7 ½ year	(1552)	○ 7 ½ year	(2552)
○ 11 ½ year	(1553)	○ 11 ½ year	(2553)

SURCHARGE
The surcharge required by 37 CFR 1.20(i)(2) (Fee Code 1558) must be paid as a condition of accepting unintentionally delayed payment of the maintenance fee.

MAINTENANCE FEE (37 CFR 1.20(e)-(g))
The appropriate maintenance fee must be submitted with this petition.

STATEMENT
THE UNDERSIGNED CERTIFIES THAT THE DELAY IN PAYMENT OF THE MAINTENANCE FEE TO THIS PATENT WAS UNINTENTIONAL

PETITIONER(S) REQUEST THAT THE DELAYED PAYMENT OF THE MAINTENANCE FEE BE ACCEPTED AND THE PATENT REINSTATED

THIS PORTION MUST BE COMPLETED BY THE SIGNATORY OR SIGNATORIES

37 CFR 1.378(d) states: "Any petition under this section must be signed by an attorney or agent registered to practice before the Patent and Trademark Office, or by the patentee, the assignee, or other party in interest."

I certify, in accordance with 37 CFR 1.4(d)(4) that I am

◉ An attorney or agent registered to practice before the Patent and Trademark Office

○ A sole patentee

○ A joint patentee; I certify that I am authorized to sign this submission on behalf of all the other patentees.

○ A joint patentee; all of whom are signing this e-petition

○ The assignee of record of the entire interest

Patent Practitioner			
A signature of the applicant or representative is required in accordance with 37 CFR 1.33 and 10.18. Please see 37 CFR 1.4(d) for the form of the signature			
Signature	/Lawrence Fridman/	Date (YYYY-MM-DD)	2008-02-21
Name	Lawrence G. Fridman	Registration Number	31615

This collection of information is required by 37 CFR 1.378(c). The information is required to obtain or retain a benefit by the public which is to file (and by the USPTO to process) an application. Confidentiality is governed by 35 U.S.C. 122 and 37 CFR 1.11 and 1.14. This collection is estimated to take 1 hour to complete, including gathering, preparing, and submitting the completed application form to the USPTO. Time will vary depending upon the individual case. Any comments on the amount of time you require to complete this form and/ or suggestions for reducing this burden, should be sent to the Chief Information Officer, U.S. Patent and Trademark Office, U.S. Department of Commerce, P.O. Box 1450, Alexandria, VA 22313-1450. DO NOT SEND FEES OR COMPLETED FORMS TO THIS ADDRESS. **This form can only be used when in conjunction with EFS-Web. If this form is mailed to the USPTO, it may cause delays in reinstating the patent.**

Privacy Act Statement

The Privacy Act of 1974 (P.L. 93-579) requires that you be given certain information in connection with your submission of the attached form related to a patent application or patent. Accordingly, pursuant to the requirements of the Act, please be advised that: (1) the general authority for the collection of this information is 35 U.S.C. 2(b)(2); (2) furnishing of the information solicited is voluntary; and (3) the principal purpose for which the information is used by the U.S. Patent and Trademark Office is to process and/or examine your submission related to a patent application or patent. If you do not furnish the requested information, the U.S. Patent and Trademark Office may not be able to process and/or examine your submission, which may result in termination of proceedings or abandonment of the application or expiration of the patent.

The information provided by you in this form will be subject to the following routine uses:

1. The information on this form will be treated confidentially to the extent allowed under the Freedom of Information Act (5 U.S.C. 552) and the Privacy Act (5 U.S.C. 552a). Records from this system of records may be disclosed to the Department of Justice to determine whether the Freedom of Information Act requires disclosure of these record s.

2. A record from this system of records may be disclosed, as a routine use, in the course of presenting evidence to a court, magistrate, or administrative tribunal, including disclosures to opposing counsel in the course of settlement negotiations.

3. A record in this system of records may be disclosed, as a routine use, to a Member of Congress submitting a request involving an individual, to whom the record pertains, when the individual has requested assistance from the Member with respect to the subject matter of the record.

4. A record in this system of records may be disclosed, as a routine use, to a contractor of the Agency having need for the information in order to perform a contract. Recipients of information shall be required to comply with the requirements of the Privacy Act of 1974, as amended, pursuant to 5 U.S.C. 552a(m).

5. A record related to an International Application filed under the Patent Cooperation Treaty in this system of records may be disclosed, as a routine use, to the International Bureau of the World Intellectual Property Organization, pursuant to the Patent Cooperation Treaty.

6. A record in this system of records may be disclosed, as a routine use, to another federal agency for purposes of National Security review (35 U.S.C. 181) and for review pursuant to the Atomic Energy Act (42 U.S.C. 218(c)).

7. A record from this system of records may be disclosed, as a routine use, to the Administrator, General Services, or his/her designee, during an inspection of records conducted by GSA as part of that agency's responsibility to recommend improvements in records management practices and programs, under authority of 44 U.S.C. 2904 and 2906. Such disclosure shall be made in accordance with the GSA regulations governing inspection of records for this purpose, and any other relevant (i.e., GSA or Commerce) directive. Such disclosure shall not be used to make determinations about individuals.

8. A record from this system of records may be disclosed, as a routine use, to the public after either publication of the application pursuant to 35 U.S.C. 122(b) or issuance of a patent pursuant to 35 U.S.C. 151. Further, a record may be disclosed, subject to the limitations of 37 CFR 1.14, as a routine use, to the public if the record was filed in an application which became abandoned or in which the proceedings were terminated and which application is referenced by either a published application, an application open to public inspections or an issued patent.

9. A record from this system of records may be disclosed, as a routine use, to a Federal, State, or local law enforcement agency, if the USPTO becomes aware of a violation or potential violation of law or regulation.

UNITED STATES PATENT AND TRADEMARK OFFICE

Commissioner for Patents
United States Patent and Trademark Office
P.O. Box 1450
Alexandria, VA 22313-1450
www.uspto.gov

In re Patent No. 6669254
Issue Date: December 30,2003
Application No. 10121526
Filed: April 12,2002
Attorney Docket No. F0116

:
:DECISION GRANTING PETITION
:UNDER 37 CFR 1.378(c)
:

This is a decision on the electronic petition, filed February 21,2008 ,under 37 CFR 1.378(c) to accept the unintentionally delayed payment of the 3.5 year maintenance fee for the above-identified patent.

The petition is GRANTED.

The maintenance fee is accepted, and the above-identified patent reinstated as of February 21,2008 . This decision also constitutes notice that the fee has been accepted. An electronic copy of the petition and this decision has been created as an entry in an Image File Wrapper. Nevertheless, petitioner should print and retain an independent copy

Telephone inquires related to this electronic decision should be directed to the Electronic Business Center at 1-866-217-9197.

UNITED STATES PATENT AND TRADEMARK OFFICE

COMMISSIONER FOR PATENTS
UNITED STATES PATENT AND TRADEMARK OFFICE
WASHINGTON, D.C. 20231
www.uspto.gov
DW 00-02

Mark J. Licata
11504 River Edge Road
Doswell, VA 23047

COPY MAILED

SEP 1 1 2002

OFFICE OF PETITIONS

In re Application of
Mitchell et al.
Application No. 10/121,541
Filed: 12 April, 2002
For:SENSOR FOR BIOPOTENTIAL MEASUREMENTS

Dear Mr. Licata:

You are named as a joint inventor in the above identified United States patent application, filed under the provisions of 35 U.S.C. 116 (United States Code), and 37 CFR 1.47(a), Rules of Practice in Patent Cases. Should a patent be granted on the application you will be designated therein as a joint inventor.

As a named inventor you are entitled to inspect any paper in the file wrapper of the application, order copies of all or any part thereof (at a prepaid cost per 37 CFR 1.19) or make your position of record in the application. Alternatively, you may arrange to do any of the preceding through a registered patent attorney or agent presenting written authorization from you. If you care to join the application, counsel of record (see below) would presumably assist you. Joining in the application would entail the filing of an appropriate oath or declaration by you pursuant to 37 CFR 1.63.

Telephone inquiries regarding this communication should be directed to the undersigned at 703/308-6918. Requests for information regarding your application should be directed to the File Information Unit at 703/308-2733. Information regarding how to pay for and order a copy of the application, or a specific paper in the application, should be directed to Certification Division at 703/308-9726 or 1-800-972-6382 (outside the Washington D.C. area).

D Wood

Douglas I. Wood
Senior Petitions Attorney
Office of Petitions
Office of the Deputy Commissioner
for Patent Examination Policy

JOHN H. THOMAS, P.C.
1561 EAST MAIN STREET
RICHMOND VA 23219

UNITED STATES PATENT AND TRADEMARK OFFICE

COMMISSIONER FOR PATENTS
UNITED STATES PATENT AND TRADEMARK OFFICE
WASHINGTON, D.C. 20231
www.uspto.gov
DW 00-02

Paper No. 6

JOHN H. THOMAS, P.C.
1561 EAST MAIN STREET
RICHMOND VA 23219

COPY MAILED

SEP 1 1 2002

OFFICE OF PETITIONS

In re Application of	:
Mitchell, Licata, and Burton	:
Application No. 10/121,541	: DECISION ACCORDING STATUS
Filed: 12 April, 2001	: UNDER 37 CFR 1.47(a)
Attorney Docket No. NEWLIF6	:

This is in response to the petition under 37 CFR 1.47(a)[1] filed on 29 July, 2002.

The petition is **GRANTED**.

Petitioners have shown that non-signing joint inventor Mark J. Licata has refused to join in the filing of this application. Specifically, petitioners have shown, via the statement by petitioners' counsel, John H. Thomas, that a copy of the application papers was sent by Federal Express to the last known address of joint inventor Licata, but Licata refused orally to sign and return the declaration naming his as a joint inventor along with James Michell and Steve Burton.

This application and papers have been reviewed and found in compliance with 37 CFR 1.47(a). This application is hereby accorded Rule 1.47(a) status.

---

[1]A grantable petition under 37 CFR 1.47(a) requires:

(1) proof that the non-signing inventor cannot be reached or refuses to sign the oath or declaration after having been presented with the application papers (specification, claims and drawings);

(2) an acceptable oath or declaration in compliance with 35 U.S.C. §§ 115 and 116;

(3) the petition fee; and

(4) a statement of the last known address of the non-signing inventor.

As provided in Rule 1.47(c), this Office will forward notice of this application's filing to the non-signing inventor at the address given in the Declaration. Notice of the filing of this application will also be published in the Official Gazette.

After this decision is mailed, the above-identified application will be forwarded to Technology Center 3700 for examination in due course.

Telephone inquiries related to this decision should be directed to the undersigned at 703-308-6918.

D Wood

Douglas I. Wood
Senior Petitions Attorney
Office of Petitions
Office of the Deputy Commissioner
for Patent Examination Policy

SPE RESPONSE FOR CERTIFICATE OF CORRECTION

Paper No.: _____

DATE : 2/3/09

TO SPE OF : ART UNIT 2625

SUBJECT : Request for Certificate of Correction for Appl. No.: 10121545 Patent No.: 7034957 B2

Please respond to this request for a certificate of correction within 7 days.

FOR IFW FILES:

Please review the requested changes/corrections as shown in the **COCIN** document(s) in the IFW application image. No new matter should be introduced, nor should the scope or meaning of the claims be changed.

Please complete the response (see below) and forward the completed response to scanning using document code **COCX**.

FOR PAPER FILES:

Please review the requested changes/corrections as shown in the attached certificate of correction. Please complete this form (see below) and forward it with the file to:

Certificates of Correction Branch (CofC)
South Tower - 9A22
Palm Location 7580
You can fax the Directors/SPE response to 571-270-9990

LAMONTE NEWSOME
Certificates of Correction Branch
703-308-9390 ext. 112

Thank You For Your Assistance

The request for issuing the above-identified correction(s) is hereby:
Note your decision on the appropriate box.

- ☒ **Approved** — All changes apply.
- ☐ **Approved in Part** — Specify below which changes **do not** apply.
- ☐ **Denied** — State the reasons for denial below.

Comments: A correction has been made and approved

SPE 2625

PTOL-306 (REV. 7/03)

UNITED STATES PATENT AND TRADEMARK OFFICE

Commissioner for Patents
United States Patent and Trademark Office
P.O. Box 1450
Alexandria, VA 22313-1450
www.uspto.gov

THE GATES CORPORATION
IP LAW DEPT. 10-A3
1551 WEWATTA STREET
DENVER, CO 80202

COPY MAILED

NOV 0 8 2005

OFFICE OF PETITIONS

In re Application of :
Dieter Martin et al :
Application No. 10/121,556 :
Filed: April 12, 2002 :
Attorney Docket No. B99-025A :

ON PETITION

This is a decision on the petition under 37 CFR 1.137(b), filed March 22, 2005, to revive the above-identified application.

The petition is **DISMISSED.**

Any request for reconsideration of this decision must be submitted within TWO (2) MONTHS from the mail date of this decision. Extensions of time under 37 CFR 1.136(a) are permitted. The reconsideration request should include a cover letter entitled "**Renewed Petition under 37 CFR 1.137(b)**." This is **not** final agency action within the meaning of 5 U.S.C. § 704.

A grantable petition under 37 CFR 1.137(b) must be accompanied by: (1) the required reply, unless previously filed; (2) the petition fee as set forth in 37 CFR 1.17(m); (3) a statement that the entire delay in filing the required reply from the due date for the reply until the filing of a grantable petition pursuant to 37 CFR 1.137(b) was unintentional; and (4) any terminal disclaimer (and fee as set forth in 37 CFR 1.20(d)) required by 37 CFR 1.137(c). Where there is a question as to whether either the abandonment or the delay in filing a petition under 37 CFR 1.137 was unintentional, the Commissioner may require additional information. See MPEP 711.03(c)(III)(C) and (D). The instant petition lack(s) item(s) (1).

The above-identified application became abandoned for failure to reply within the meaning of 37 CFR 1.113 in a timely manner to the final Office action mailed September 17, 2004, which set a shortened statutory period for reply of three (3) months. A reply under 37 CFR 1.113 is limited to an amendment that *prima facie* places the application in condition for allowance or a Notice of Appeal (and appeal fee required by 37 CFR 1.17(b)). No amendment *prima facie* placing the application in condition for allowance or Notice of Appeal (and appeal fee) was timely filed, one month extension of time under the provisions of 37 CFR 1.136(a) were obtained. Accordingly, the above-identified application became abandoned on December 18, 2004.

Further correspondence with respect to this matter should be addressed as follows:

By mail: Mail Stop PETITION
Commissioner for Patents
Post Office Box 1450
Alexandria, VA 22313-1450

By hand: Customer Service Window
Randolph Building
401 Dulany Street
Alexandria, VA 22314

By facsimile: (571) 273-8300
ATTN: Office of Petitions

Telephone inquiries concerning this decision should be directed to the undersigned at (571) 272-3210.

Irvin Dingle
Petitions Examiner
Office of Petitions

Attachment: Advisory Action

UNITED STATES PATENT AND TRADEMARK OFFICE

Commissioner for Patents
United States Patent and Trademark Office
P.O. Box 1450
Alexandria, VA 22313-1450
www.uspto.gov

THE GATES CORPORATION
IP LAW DEPT. 10-A3
1551 WEWATTA STREET
DENVER, CO 80202

COPY MAILED
SEP 2 0 2006
OFFICE OF PETITIONS

In re Application of	:	
Dieter Martin et al	:	
Application No. 10/121,556	:	ON PETITION
Filed: April 12, 2002	:	
Attorney Docket No. B99-025A	:	

This is a decision on the renewed petition filed, November 18, 2005 and supplemented on September 19, 2006 under 37 CFR 1.137(b), to revive the above-identified application.

The petition is **GRANTED.**

The above-identified application is being revived solely for purposes of continuity with a Request For Continued Examination (RCE) filed on November 18, 2005.

Telephone inquiries concerning this decision should be directed to Irvin Dingle at (571) 272-3210.

This matters is being referred to Technology Center AU 3682 for further processing.

Irvin Dingle
Petitions Examiner
Office of Petitions

UNITED STATES PATENT AND TRADEMARK OFFICE

COMMISSIONER FOR PATENTS
UNITED STATES PATENT AND TRADEMARK OFFICE
WASHINGTON, D.C. 20231
www.uspto.gov
DIW 00-02

Paper No. 4

PHYLLIS K. KRISTAL
FISH & RICHARDSON P.C.
601 THIRTEENTH STREET, NW
WASHINGTON DC 20005

COPY MAILED

SEP 1 1 2002

OFFICE OF PETITIONS

In re Application of	:	
Michel Lange	:	
Application No. 10/121,581	:	DECISION DISMISSING
Filed: 15 April, 2002	:	PETITION
Attorney Docket No. 13395-002002	:	

This is a decision on the petition filed on 4 June, 2002, requesting that the "Notice to File Missing Parts of Nonprovisional Application" mailed on 13 May, 2002, in the above-identified application be vacated to the extent that it states that Page 8 of the specification appeared to have been omitted from the application.

The application was filed on 15 April, 2002. However, on 13 May, 2002, the Office mailed a "Notice to File Missing Parts of Nonprovisional Application" stating that the application had been accorded a filing date of 15 April, 2002, and advising applicants that, *inter alia*, Page 8 of the specification (description and claims) appeared to have been omitted from the application.

In response, applicant filed the present petition, authorization to charge the petition fee, and copy of Page 8 of PCT Application PCT/CA00/00110. Petitioners request that the application, including Page 8 of the specification, be accorded a filing date of 15 April, 2002, because the present application is a continuation of prior Application No. 09/890,399, filed 31 July, 2001, which claims the benefit of PCT/CA00/00110, and incorporates the prior application by reference.

The arguments have been considered, but are not persuasive. The U.S. Patent and Trademark Office (Office) file is the official

record of the papers originally filed in this application. A review of the papers originally filed reveals that 12 pages of specification were filed on 15 April, 2002. No page 8 was filed on 15 April, 2002, since no such page is present among the application papers received on that date. An applicant alleging that a paper was filed in the Office and later misplaced has the burden of proving the allegation by a preponderance of the evidence.

At the outset, it is noted that the USPTO has a long-established and well publicized practice for *prima facie* establishing the date of receipt of correspondence that has either been mailed or otherwise delivered to the PTO, and is asserted to have been subsequently misplaced: the itemized postcard receipt practice of section 503 of the Manual of Patent Examining Procedure (MPEP).[1] This practice requires that any paper(s) for which a receipt is desired be filed in the USPTO with a self-addressed postcard identifying the paper(s). A postcard receipt which itemizes and properly identifies the paper(s) which is being filed serves as *prima facie* evidence of receipt in the USPTO of all the items listed thereon on the date stamped thereon by the USPTO.

Where the records of the Office (e.g. the file of the application) contain any document(s) or fee(s) corresponding to the contents of the correspondence at issue, the Office will rely upon its official record of the contents of such correspondence in the absence of convincing evidence (e.g. a postcard receipt under MPEP 503 containing specific itemization of the document(s) or fee(s) purported to have been filed with the correspondence at issue) that the Office received and misplaced any document(s) or fee(s) that is not among the official records of the Office. If a new application is being filed, all parts of the application being submitted should be separately listed on the postcard (e.g. the number of pages of specification (including written description, claims and abstract) number of claims, number of sheets of drawings, number of pages of oath/declaration. The postcard receipt will not serve as *prima facie* evidence of receipt of any item which is not adequately itemized on the postcard.[2]

---

[1]The public was afforded a "reminder" of the then extent post card receipt practice at 857 *Off. Gaz. Pat. Off.* 667 (*O.G.*) (Nov. 21, 1968). This specific notice is usually repeated annually, in a January "Consolidated Listing" section of the *O.G.* that contains important *O.G.* notices of continuing relevance.

[2]MPEP 503.

Since page 8 was not a part of the papers filed on 15 April, 2002, the application cannot be accorded the 15 April, 2002, filing date with this page as a part of the original disclosure of this application.

As petitioner correctly points out, the transmittal sheet accompanying the original application papers located in the official file states that the present application is a continuation of Application No. 09/890,399, filed on 31 July, 2001. Further, the transmittal letter states that "The disclosure[s] of the prior application[s] are considered part of (and are incorporated by reference in) the disclosure of this application."

Section 201.06(c) of the Manual of Patent Examining Procedure states that:

> . . . an applicant may incorporate by reference the prior application by including, in the application-as-filed, a statement that such specifically enumerated prior application or applications are "hereby incorporated herein by reference." The statement may appear in the specification or in the application transmittal letter. The inclusion of this incorporation by reference of the prior application(s) will permit an applicant to amend the continuing application to include any subject matter in such prior application(s), <u>without the need for a petition</u>. (emphasis supplied)

Obviously, in view of the incorporation by reference of the prior application, Page 8 of the specification is not new matter if it was a part of the disclosure of the prior application.

Accordingly, the petition is <u>dismissed</u>.

The copy of Page 8, submitted with the present petition on 4 June, 2002, will <u>not</u> be entered or used during the prosecution of this application, but will be retained in the application file. However, applicant may resubmit the matter included in Page 8 as an amendment for consideration by the examiner under Sections 608.02(p) and 608.04 of the Manual of Patent Examining Procedure. Accordingly, the "Notice" mailed on 13 May, 2002, was correct in stating that Page 8 of the specification had been omitted. Therefore, the "Notice" was properly mailed and will not be vacated.

The $130.00 petition fee will not be refunded because the present petition was not necessitated by any error on the part of the United States Patent and Trademark Office.

The address on the present petition is different than the address of record. A courtesy copy of this petition will be forwarded to the address on the petition. All future correspondence, however, will be mailed solely to the address of record.

The application is being forwarded to the Office of Initial Patent Examination for further processing with a filing date of 15 April, 2002, using only the application papers present on that date.

Any inquiries related to this decision should be directed to the undersigned at (703) 308-6918.

D Wood

Douglas I. Wood
Senior Petitions Attorney
Office of Petitions
Office of the Deputy Commissioner
for Patent Examination Policy

cc: Fish & Richardson P.C.
1425 K Street, N.W.
11th Floor
Washington, DC 20005-3500

UNITED STATES PATENT AND TRADEMARK OFFICE

COMMISSIONER FOR PATENTS
UNITED STATES PATENT AND TRADEMARK OFFICE
P.O. BOX 1450
ALEXANDRIA, VA 22313-1450
www.uspto.gov

FISH & RICHARDSON P.C.
P.O. BOX 1022
MINNEAPOLIS MN 55440-1022

COPY MAILED
AUG 14 2006
OFFICE OF PETITIONS

In re Patent No. 6,881,428 :
Issued: April 19, 2005 :
Application No. 10/121,581 :
Filed: April 15, 2002 :
Attorney Docket No. 13395-002002 :

NOTICE

This is a notice regarding your request for acceptance of a fee deficiency submission under 37 CFR 1.28. On September 1, 1998, the Court of Appeals for the Federal Circuit held that 37 CFR 1.28(c) is the sole provision governing the time for correction of the erroneous payment of the issue fee as a small entity. **See DH Technology v. Synergystex International, Inc. 154 F.3d 1333, 47 USPQ2d 1865 (Fed. Cir. Sept. 1, 1998).**

The Office no longer investigates or rejects original or reissue applications under 37 CFR 1.56. **1098 Off. Gaz. Pat. Office 502 (January 3, 1989)**. Therefore, nothing in this Notice is intended to imply that an investigation was done.

Your fee deficiency submission under 37 CFR 1.28 is hereby **ACCEPTED**.

This application is no longer entitled to small entity status. Accordingly, all future fees paid in this application must be paid at the large entity rate.

Inquiries related to this communication should be directed to the undersigned at (571) 272-3205.

ALESIA M. BROWN
Petitions Attorney
Office of Petitions

UNITED STATES PATENT AND TRADEMARK OFFICE

Commissioner for Patents
United States Patent and Trademark Office
P.O. Box 1450
Alexandria, VA 22313-1450
www.uspto.gov

KENYON & KENYON
1500 K STREET NW, SUITE 700
WASHINGTON, DC 20005

COPY MAILED

MAR 27 2006

OFFICE OF PETITIONS

In re Application of
Kazuo Nakazato et al
Application No. 10/121,596
Filed: April 15, 2002
Attorney Docket No. 2369/35

: DECISION GRANTING PETITION
: UNDER 37 CFR 1.313(c)(2)

This is a decision on the petition, filed March 27, 2006, under 37 CFR 1.313(c)(2) to withdraw the above-identified application from issue after payment of the issue fee.

The petition is **GRANTED**.

The above-identified application is withdrawn from issue for consideration of a submission under 37 CFR 1.114 (request for continued examination). See 37 CFR 1.313(c)(2).

Petitioner is advised that the issue fee paid on October 21, 2005 in the above-identified application cannot be refunded. If, however, the above-identified application is again allowed, petitioner may request that it be applied towards the issue fee required by the new Notice of Allowance.[1]

Telephone inquiries should be directed to the undersigned at (571) 272-3218.

This matter is being referred to Technology Center AU 2818 for processing of the request for continued examination under 37 CFR 1.114 and for consideration of the Information Disclosure Statement.

Frances Hicks
Frances Hicks
Petitions Examiner
Office of Petitions

C:\Documents and Settings\FHicks\My Documents\470\Mar9\121596.wpd

---

[1] *The request to apply the issue fee to the new Notice may be satisfied by completing and returning the new Part B – Fee(s) Transmittal Form (along with any balance due at the time of submission), which includes the following language thereon: "The Director of the USPTO is requested to apply the Issue Fee and Publication Fee (if any) or to re-apply any previously paid issue fee in the application identified above. Petitioner is advised that, whether a fee is indicated as being due or not, the Issue Fee Transmittal Form* ***must*** *be completed and timely submitted to avoid abandonment. Note the language in bold text on the first page of the Notice of Allowance and Fee(s) Due (PTOL-85).*

UNITED STATES PATENT AND TRADEMARK OFFICE

COMMISSIONER FOR PATENTS
UNITED STATES PATENT AND TRADEMARK OFFICE
WASHINGTON, D.C. 20231
www.uspto.gov

Paper No. 9

COPY MAILED
MAY 05 2003
OFFICE OF PETITIONS

Bernard Malina
Malina & Wolson
60 East 42nd Street
New York NY 10165

In re Application of :
Yaskil et al. :
Application No. 10/121,600 : ON PETITION
Filed: April 15, 2002 :
Attorney Docket No. SW-109 :

This is a decision on the petition under 37 CFR 1.137(b), filed April 11, 2003, to revive the above-identified application.

The petition is **GRANTED**.

This application became abandoned for failure to reply timely to the nonfinal Office action mailed August 28, 2002, which set a three-month shortened statutory period to respond. No extensions of time were obtained pursuant to 37 CFR 1.136(a). Accordingly, this application became abandoned on November 29, 2002. A Notice of Abandonment was mailed on March 7, 2003.

The petitioner has met the requirements to revive the above-identified application pursuant to 37 CFR 1.137(b). Petitioner submitted the required reply in the form of an amendment, paid the petition fee, and made the proper statement of unintentional delay.

The file is being forwarded to Technology Center 3600.

Telephone inquiries concerning this matter may be directed to the undersigned at (703) 306-5589.

Christina Tartera Donnell

Christina Tartera Donnell
Senior Petitions Attorney
Office of Petitions

BEST AVAILABLE COPY

UNITED STATES PATENT AND TRADEMARK OFFICE

Commissioner for Patents
United States Patent and Trademark Office
Washington, D.C. 20231
www.uspto.gov

Paper No. 6

SUPERVISOR PATENT PROSECUTION SERVICES
PIPER RUDNICK LLP
1200 NINETEENTH STREET NW
WASHINGTON DC 20036-2412

COPY MAILED

APR 2 1 2003

OFFICE OF PETITIONS

In re Application of Beazley, et al. Application No. 10/121,615 Filed: April 15, 2002 Attorney Docket No. 9526-002-27	: : : : :	DECISION ACCORDING STATUS UNDER 37 CFR 1.47(a)

This is in response to the petition under 37 CFR 1.47(a), filed November 22, 2002.

The petition under 37 CFR 1.47(a) is **GRANTED**.

The above-identified application was filed on April 15, 2002, without an executed oath or declaration. Accordingly, on May 22, 2002, applicant was mailed a "Notice to File Missing Parts of Nonprovisional Application - Filing Date Granted," requiring, *inter alia*, an executed oath or declaration. This Notice set a two-month period for reply.

In reply, applicant filed the instant petition and paid the surcharge for late filing of the declaration. To make timely this reply, applicant obtained a four month extension of time. Accompanying the petition was a declaration signed by joint inventor Jacob Nudel, but lacking a signature from joint inventor Donald E. Beazley.

A grantable petition under 37 CFR 1.47(a) requires: (1) proof that the non-signing inventor cannot be reached or refuses to sign the oath or declaration after having been presented with the application papers (specification, claims, drawings, oath or declaration); (2) an acceptable oath or declaration in compliance with 37 CFR 1.63; (3) the petition fee; and (4) a statement of the last known address of the non-signing inventor.

On petition, attorney Steven B. Keller included a statement of facts from attorney Wilburn Chesser. Chesser stated that he mailed a copy of the application papers to Beazley on November 5, 2002. A copy of the letter transmitting the application papers was included. According to Chesser, no executed declaration from Beazley has been received.

The instant petition has been reviewed and determined to be in compliance with 37 CFR 1.47(a). The declaration submitted with the petition has been determined to be in compliance with 37 CFR 1.63. Accordingly, the above-identified application is hereby accorded Rule 1.47(a) status.

Pursuant to 37 CFR 1.47(c), this Office will forward notice of this application's filing to the non-signing inventor at the last known address given in the petition. Notice of the filing of this application will also be published in the Official Gazette.

The application file is being forwarded to the Office of Initial Patent Examination for pre-examination processing.

Telephone inquiries related to this decision may be directed to the undersigned at (703) 305-0272.

Cliff Congo
Petitions Attorney
Office of Petitions

UNITED STATES PATENT AND TRADEMARK OFFICE

COMMISSIONER FOR PATENTS
UNITED STATES PATENT AND TRADEMARK OFFICE
P.O. BOX 1450
ALEXANDRIA, VA 22313-1450
www.uspto.g

MAILED

MAY 24 2004

PATENT & TRADEMARK OFFICE
TECHNOLOGY CENTER 3600

Supervisor, Patent Prosecution Services
PIPER RUDNICK LLP
1200 Nineteenth Street, N.W.
Washington DC 20036-2412

In re application of
Donald E. Beazley et al.
Application No. 10/121,615
Filed: April 15, 2002
For: SYSTEM AND METHOD FOR SECURE HIGHWAY FOR REAL-TIME PREADJUDICATION AND PAYMENT OF MEDICAL CLAIMS

: DECISION ON REQUEST FOR WITHDRAWAL OF ATTORNEY

This is a decision on the request filed on February 6, 2004 under 37 CFR 1.36 and MPEP 402.06, requesting permission to withdraw as the attorney of record in the above-identified application.

The request is **NOT APPROVED**.

Under 37 CFR 1.36 an attorney may withdraw only upon application to and approval by the Commissioner. It should be noted that a withdrawal is effective when approved, not when filed. Besides giving due notice to his or her client and delivering to the client all papers and property to which the client is entitled as specified under 37 CFR 10.40, approval of such a request requires that the following conditions be met:

A) Each attorney of record must sign the notice of withdrawal, or the notice must contain a clear indication of one attorney signing on behalf of another, because the Office does not recognize law firms;

B) A proper reason for the withdrawal as enumerated in 37 CFR 10.40(b) or subsection (1)-(6) of 37 CFR 10.40(c) must be provided; and

C) If withdrawal is requested in accordance with 37 CFR 10.40(c) above, there must be at least 30 days between approval of the withdrawal and the later of the expiration date of a time period for reply or the expiration date of the period which can be obtained by a petition and fee for extension of time under 37 CFR 1.136(a).

The request to withdraw as attorney in the above-identified application is not approved because the request does not comply with Item A).

As to Item A, it is not clear whether the attorney signing the request is signing to withdrawal on behalf of himself and all the attorneys of record or just the attorneys who signed the request.

All the attorneys given power in the original Declaration/Power of Attorney are not indicated as being withdrawn in the Request for Withdrawal of Attorney, specifically Paul C. Kimball, Wilburn L. Chesser and Patrick R. Delaney have not signed the petition. It is suggested that the signing attorney withdraw on behalf of himself and all attorneys of record if that is the intent of the petition.

Kenneth J. Dorner
Special Programs Examiner
Patent Technology Center 3600
(703) 308-0866

KJD/mjz: 5/13/04

UNITED STATES PATENT AND TRADEMARK OFFICE

Commissioner for Patents
United States Patent and Trademark Office
P.O. Box 1450
Alexandria, VA 22313-1450
www.uspto.gov

WARNER NORCROSS & JUDD LLP
900 FIFTH THIRD CENTER
111 LYON STREET, N.W.
GRAND RAPIDS MI 49503-2487

COPY MAILED

NOV 1 0 2005

OFFICE OF PETITIONS

In re Application of :
Roger C. BRUINS et al. :
Application No. 10/121,627 : ON PETITION
Filed: April 12, 2002 :
Attorney Docket No. 61470.78354-003 :

This is a decision on the petition under 37 CFR 1.137(b), filed August 8, 2005, to revive the above-identified application.

The petition is **GRANTED**.

The above-identified application became abandoned for failure to reply within the meaning of 37 CFR 1.113 in a timely manner to the final Office action mailed December 20, 2004, which set a shortened statutory period for reply of three (3) months. A three (3) month extension of time under the provisions of 37 CFR 1.136(a) was obtained. Accordingly, the above-identified application became abandoned on June 21, 2005.

The petition satisfies the conditions for revival pursuant to the provisions of 37 CFR 1.137(b) in that (1) the reply in the form of an amendment, Request for Continued Examination, and the $395 filing fee; (2) the petition fee of $750; and (3) the required statement of unintentional delay have been received. Accordingly, the reply to the final Office Action of December 20, 2004 is accepted as having been unintentionally delayed.

It is not apparent whether the person signing the statement of unintentional delay was in a position to have firsthand knowledge of the facts and circumstances of the delay at issue. Nevertheless, such statement is being treated as having been made as the result of a reasonable inquiry into the facts and circumstances of such delay. See 37 CFR 10.18(b) and Changes to Patent Practice and Procedure; Final rule Notice, 62 Fed. Reg. 53131, 53178 (October 10, 1997), 1203 Off. Gaz. Pat. Office 63, 103 (October 21, 1997). In the event that such an inquiry has not been made, petitioner must make such an inquiry. If such inquiry results in the discovery that it is not correct that the entire delay in filing the required reply from the due date for the reply until

the filing of a grantable petition pursuant of 37 CFR 1.137(b) was unintentional, petitioner must notify the Office.

Telephone inquiries concerning this decision should be directed to David A. Bucci at (571) 272-7099 or in his absence, the undersigned at (571) 272-3217.

The application file is being referred to Technology Center AU 3721 for appropriate action on the concurrently filed amendment.

Brian Hearn
Petitions Examiner
Office of Petitions

UNITED STATES PATENT AND TRADEMARK OFFICE

Commissioner for Patents
United States Patent and Trademark Office
P.O. Box 1450
Alexandria, VA 22313-1450
www.uspto.gov

CHARLES G. CALL
68 HORSE POND ROAD
WEST YARMOUTH MA 02673-2516

COPY MAILED

JAN 1 0 2007

OFFICE OF PETITIONS

In re Application of	:	
Han et al.	:	
Application No. 10/121,633	:	ON PETITION
Filed: April 12, 2002	:	
Attorney Docket No. B-10	:	

This is a decision on the petition under 37 C.F.R. § 1.137(b), filed September 6, 2006, to revive the above-identified application.

The petition is **GRANTED.**

The petition satisfies the conditions for revival pursuant to the provisions of 37 CFR 1.137(b) in that (1) the reply in the form of an Amendment; (2) the petition fee; and (3) the required statement of unintentional delay have been received. Accordingly, the response has been accepted as having been unintentionally delayed.

This matter is being referred to Technology Center 2100 for further examination on the merits.

Telephone inquiries regarding this decision should be directed to the undersigned at (571) 272-3206.

Liana Walsh
Petitions Examiner
Office of Petitions

UNITED STATES PATENT AND TRADEMARK OFFICE

Commissioner for Patents
United States Patent and Trademark Office
P.O. Box 1450
Alexandria, VA 22313-1450
www.uspto.gov

CHARLES G. CALL
215 W. HURON ST APT 2
CHICAGO IL 60610-3331

COPY MAILED

SEP 1 4 2007

OFFICE OF PETITIONS

In re Application of	:	
Han et al.	:	
Application No. 10/121,633	:	ON PETITION
Filed: April 12, 2002	:	
Attorney Docket No. B-10	:	

This is a decision on the petition under 37 C.F.R. § 1.137(b), filed September 11, 2007, to revive the above-identified application.

The petition is **GRANTED.**

The petition satisfies the conditions for revival pursuant to the provisions of 37 CFR 1.137(b) in that (1) the reply in the form of an Amendment; (2) the petition fee; and (3) the required statement of unintentional delay have been received. Accordingly, the response has been accepted as having been unintentionally delayed.

This matter is being referred to Technology Center 2100 for further examination on the merits.

Telephone inquiries regarding this decision should be directed to the undersigned at (571) 272-3206.

Liana Walsh
Petitions Examiner
Office of Petitions

UNITED STATES PATENT AND TRADEMARK OFFICE

Commissioner for Patents
United States Patent and Trademark Office
P.O. Box 1450
Alexandria, VA 22313-1450
www.uspto.gov

GENERAL MILLS, INC.
P.O. BOX 1113
MINNEAPOLIS MN 55440

COPY MAILED

NOV 13 2009

OFFICE OF PETITIONS

In re Application of	:	
Amy Konkoly et al.	:	
Application No. 10/121,637	:	ON PETITION
Filed: April 12, 2002	:	
Attorney Docket No. 5526	:	

This is a decision on the petition under the unintentional provisions of 37 CFR 1.137(b), filed August 24, 2009, to revive the above-identified application.

The petition is **DISMISSED**.

Any request for reconsideration of this decision must be submitted within TWO (2) MONTHS from the mail date of this decision. Extensions of time under 37 CFR 1.136(a) are permitted. The reconsideration request should include a cover letter entitled "Renewed Petition under 37 CFR 1.137(b)." This is **not** a final agency action within the meaning of 5 U.S.C. § 704.

The application became abandoned for failure to reply in a timely manner to the final Office action mailed, December 23, 2005, which set a shortened statutory period for reply of three (3) months. No extensions of time under the provision of 37 CFR 1.136(a) were obtained. Accordingly, the application became abandoned on March 24, 2006.

A grantable petition under 37 CFR 1.137(b) must be accompanied by: (1) the required reply, unless previously filed; (2) the petition fee as set forth in 37 CFR 1.17(m); (3) a statement that the entire delay in filing the required reply from the due date for the reply until the filing of a grantable petition pursuant to 37 CFR 1.137(b) was unintentional; and (4) any terminal disclaimer (and fee as set forth in 37 CFR 1.20(d)) required by 37 CFR 1.137(d). Where there is a question as to whether either the abandonment or the delay in filing a petition under 37 CFR 1.137 was unintentional, the Director may require additional information. See MPEP 711.03(c)(II)(C) and (D). The instant petition lacks item(s) (1) and (3).

As to item (1):

Petitioner has stated in the in the instant petition that the reply was in the form of a "Request for Extension of time in favor of a Divisional Application." However, an extension of time under 37 CFR 1.136 must be filed prior to the expiration of the maximum extendable period for reply. *See* In re Application of S., 8 USPQ2d 1630, 1631 (Comm'r Pats. 1988). Since the $1,120 extension of time fee submitted with the petition on August 24, 2009, was subsequent to the maximum extendable period for reply, petitioner may request a refund of this fee by writing to the following address: Mail Stop 16, Commissioner for Patents, P. O. Box 1450, Alexandria, VA 22313-1450. A copy of this decision should accompany petitioner's request. Therefore, the extension of time is not acceptable and cannot be considered as a proper response.

As to item (3):

There are three periods to be considered during the evaluation of a petition under 37 CFR 1.137(b):

(1) the delay in reply that originally resulted in the abandonment;

(2) the delay in filing an initial petition pursuant to 37 CFR 1.137(b) to revive the application; and

(3) the delay in filing a grantable petition pursuant to 37 CFR 1.137(b) to revive the application.

Currently, the delay has not been shown to the satisfaction of the Director to be unintentional for periods (1) and (2).

As to Period (1):

The patent statute at 35 U.S.C. § 41(a)(7) authorizes the Director to revive an "unintentionally abandoned application." The legislative history of Public Law 97-247 reveals that the purpose of 35 U.S.C. § 41(a)(7) is to permit the Office to have more discretion than in 35 U.S.C. §§ 133 or 151 to revive abandoned applications in appropriate circumstances, but places a limit on this discretion, stating that "[u]nder this section a petition accompanied by either a fee of $500 or a fee of $50 **would not be granted where the abandonment** or the failure to pay the fee for issuing the patent **was intentional** as opposed to being unintentional or unavoidable." [emphasis added]. See H.R. Rep. No. 542, 97th Cong., 2d Sess. 6-7 (1982), *reprinted in* 1982 U.S.C.C.A.N. 770-71. The revival of an intentionally abandoned application is antithetical to the meaning and intent of the statute and regulation.

35 U.S.C. § 41(a)(7) authorizes the Director to accept a petition "for the revival of an unintentionally abandoned application for a patent." As amended December 1, 1997, 37 CFR 1.137(b)(3) provides that a petition under 37 CFR 1.137(b) must be accompanied by a statement that the delay was unintentional, but provides that "[t]he Commissioner may require additional information where there is a question whether the delay was unintentional." Where, as here, there is a question whether the initial delay was unintentional, the petitioner must meet the burden of establishing that the delay was unintentional within the meaning of 35 U.S.C. § 41(a)(7) and 37 CFR 1.137(b). *See* In re Application of G, 11 USPQ2d 1378, 1380 (Comm'r Pats. 1989); 37 CFR 1.137(b). Here, in view of the inordinate delay (more than 3 years) in resuming prosecution, there is a question whether the entire delay was unintentional. Petitioner should note that the issue is not whether some of the delay was unintentional by any party; rather, the issue is whether the entire delay has been shown to the satisfaction of the Director to be unintentional.

The question under 37 CFR 1.137(b) for period (1) is whether the delay on the part of the party having the right or authority to reply to avoid abandonment (or not reply) was unintentional. Accordingly, any renewed petition must clearly identify the party having the right to reply to avoid abandonment on March 24, 2006. That party, in turn must explain what effort(s) was made to further reply to the outstanding Office action and, further, why no reply was filed. If no effort was made to further reply, then that party must explain why the delay in this application does not result from a deliberate course of action (or inaction). Likewise, **General Mills Inc.** having been counsel of record at the time of abandonment, should explain why this application became abandoned while it was under their control and what efforts **General Mills Inc.** made to further reply of itself and with whom this matter was discussed outside of **General Mills Inc.**. Copies of any correspondence relating to the filing, or to not filing a further reply to the outstanding Office action are required from responsible person(s), **General Mills Inc.** and whoever else was involved with this application at the time of abandonment. Statements are required from any and all persons then at **General Mills Inc.** and the responsible person(s) having firsthand knowledge of the circumstances surrounding the lack of a reply to the outstanding Office action. As the courts have made clear, it is pointless for the USPTO to revive a long abandoned application without an adequate showing that the delay did not result from a deliberate course of action. *See* Lawman Armor v. Simon, 2005 U.S. Dist. LEXIS 10843, 74 USPQ2d 1633 (DC EMich 2005); Field Hybrids, LLC v. Toyota Motor Corp., 2005 U.S. Dist. LEXIS 1159 (D. Minn Jan. 27, 2005); Lumenyte Int'l Corp. v. Cable Lite Corp., Nos. 96-1011, 96-1077, 1996 U.S. App. LEXIS 16400, 1996 WL 383927 (Fed. Cir. July 9, 1996) (unpublished) (patents held unenforceable due to a finding of inequitable conduct in submitting an inappropriate statement that the abandonment was unintentional).

As to Period (2):

Likewise, where the applicant deliberately chooses not to seek or persist in seeking the revival of an abandoned application, or where the applicant deliberately chooses to

delay seeking the revival of an abandoned application, the resulting delay in seeking revival of the abandoned application cannot be considered as "unintentional" within the meaning of 37 CFR 1.137(b). *See* MPEP 711.03(c).

The language of both 35 U.S.C. § 41(a)(7) and 37 CFR 1.137(b) are clear and unambiguous, and, furthermore, without qualification. That is, the delay in filing the reply during prosecution, as well as in filing the petition seeking revival, must have been, without qualification, "unintentional" for the reply to now be accepted on petition. The Office requires that the entire delay be at least unintentional as a prerequisite to revival of an abandoned application to prevent abuse and injury to the public. *See* H.R. Rep. No. 542, 97th Cong., 2d Sess. 7 (1982), reprinted in 1982 U.S.C.C.A.N. 771 ("[i]n order to prevent abuse and injury to the public the Commissioner . . . could require applicants to act promptly after becoming aware of the abandonment"). The December 1997 change to 37 CFR 1.137 did not create any new right to overcome an intentional delay in seeking revival, or in renewing an attempt at seeking revival, of an abandoned application. *See* Changes to Patent Practice and Procedure; Final Rule Notice, 62 Fed. Reg. 53131, 53160 (October 10, 1997), 1203 Off. Gaz. Pat. Office 63, 87 (October 21, 1997), which clearly stated that any protracted delay (here, over 3 years) could trigger, as here, a request for additional information. As the courts have since made clear, a protracted delay in seeking revival, as here, requires a petitioner's detailed explanation seeking to excuse the delay as opposed to USPTO acceptance of a general allegation of unintentional delay. *See* Lawman Armor v. Simon, 2005 U.S. Dist. LEXIS 10843, 74 USPQ2d 1633, at 1637-8 (DC EMich 2005); Field Hybrids, LLC v. Toyota Motor Corp., 2005 U.S. Dist. LEXIS 1159 (D. Minn Jan. 27, 2005) at *21-*23. Statements are required from any and all persons then at **General Mills Inc.** and the responsible person(s) having firsthand knowledge of the circumstances surrounding the protracted delay, after the abandonment date, in seeking revival.

As noted in MPEP 711.03(c)(II), subsection D, in instances in which such petition was not filed within 1 year of the date of abandonment of the application, applicants should include:

> (A) the date that the applicant first became aware of the abandonment of the application; and
> (B) a showing as to how the delay in discovering the abandoned status of the application occurred despite the exercise of due care or diligence on the part of the applicant.

In either instance, applicant's failure to carry the burden of proof to establish that the "entire" delay was "unavoidable" or "unintentional" may lead to the denial of a petition under 37 CFR 1.137(b), regardless of the circumstances that originally resulted in the abandonment of the application. *See also* New York University v. Autodesk, 2007 U.S. DIST LEXIS, U.S.District LEXIS 50832, *10 -*12 (S.D.N.Y. 2007)(protracted delay in seeking revival undercuts assertion of unintentional delay).

There is no indication that the person signing the petition was ever given a power of attorney to prosecute the application. If the person signing the petition desires to receive future correspondence regarding this application, the appropriate power of attorney document must be submitted. While a courtesy copy of this decision is being mailed to the person signing the petition, all future correspondence will be directed to the address currently of record until appropriate instructions are received.

Further correspondence with respect to this matter should be addressed as follows:

By Mail: Mail Stop PETITION
Commissioner for Patents
P. O. Box 1450
Alexandria, VA 22313-1450

By hand: U. S. Patent and Trademark Office
Customer Service Window, Mail Stop Petitions
Randolph Building
401 Dulany Street
Alexandria, VA 22314

The centralized facsimile number is **(571) 273-8300.**

Telephone inquiries concerning this decision should be directed to JoAnne Burke at 571-272-4584

Ramesh Krishnamurthy

Ramesh Krishnamurthy
Petitions Examiner
Office of Petitions

cc: Dale A. Bjorkman
Kagan Binder, PLLC
221 Main St., North
Suite 200
Stillwater, MN 55082

UNITED STATES PATENT AND TRADEMARK OFFICE

COMMISSIONER FOR PATENTS
UNITED STATES PATENT AND TRADEMARK OFFICE
WASHINGTON, D.C. 20231
www.uspto.gov

Paper No. 5

PEPPER HAMILTON LLP
ONE MELLON CENTER
50TH FLOOR
PITTSBURGH, PA 15219

COPY MAILED

JUL 1 1 2002

OFFICE OF PETITIONS

In re Application of	:
Margarita Jordanova-Spassova	: DECISION GRANTING
Application No. 10/121,642	: PETITION
Filed: April 12, 2002	:
Attorney Docket No. 123981.101U	:

This is a decision on the petition filed June 5, 2002, to accord the above-identified application a filing date of April 12, 2002, instead of April 15, 2002.

The petition is **granted**.

37 CFR 1.10(c) states,

> Any person filing correspondence under this section that was received by the Office and delivered by the "Express Mail Post Office to Addressee" service of the USPS, who can show that there is a discrepancy between the filing date accorded by the Office to the correspondence and the date of deposit as shown by the "date-in" on the "Express Mail" mailing label or other official USPS notation, may petition the Commissioner to accord the correspondence a filing date as of the "date-in" on the "Express Mail" mailing label or other official USPS notation, provided that:
>
> (1) The petition is filed promptly after the person becomes aware that the Office has accorded, or will accord, a filing date other than the USPS deposit date;
>
> (2) The number of the "Express Mail" mailing label was placed on the paper(s) or fee(s) that constitute the correspondence prior to the original mailing by "Express Mail;" and
>
> (3) The petition includes a true copy of the "Express Mail" mailing label showing the "date-in," and of any other official notation by the USPS relied upon to show the date of deposit.

All of the above requirements have been met. Therefore, the application will be accorded a filing date of April 12, 2002.

A petition fee is unnecessary for a petition requesting relief under 37 CFR 1.10. Therefore, a refund of the petition fee will be scheduled.

This application is being forwarded to the Office of Initial Patent Examination Division for further processing with a filing date of April 12, 2002.

Telephone inquiries concerning this matter may be directed to Karen Creasy at (703) 305-8859.

Brian Hearn
Senior Petitions Examiner
Office of Petitions
Office of the Deputy Commissioner
for Patent Examination Policy

UNITED STATES PATENT AND TRADEMARK OFFICE

Commissioner for Patents
United States Patent and Trademark Office
P.O. Box 1450
Alexandria, VA 22313-1450
www.uspto.gov

PETER J. GORDON, PATENT COUNSEL
AVID TECHNOLOGY, INC.
ONE PARK WEST
TEWKSBURY MA 01876

COPY MAILED
OCT 1 1 2005
OFFICE OF PETITIONS

In re Application of	:	
Matthew Donaldson Moller et al	:	
Application No. 10/121,646	:	ON PETITION
Filed: April 12, 2002	:	
Attorney Docket No. 7487.0010-01	:	

This is a decision on the petition, filed October 4, 2005, under 37 CFR 1.313(c)(2) to withdraw the above-identified application from issue after payment of the issue fee.

The petition is **GRANTED.**

The above-identified application is withdrawn from issue for consideration of a submission under 37 CFR 1.114 (request for continued examination). See 37 CFR 1.313(c)(2).

Petitioner is advised that the issue fee paid on May 13, 2005 in the above-identified application cannot be refunded. If, however, the above-identified application is again allowed, petitioner may request that it be applied towards the issue fee required by the new Notice of Allowance.[1]

Telephone inquiries should be directed to the undersigned at (571) 272-3208.

The examiner of Technology Center AU 2145 will consider the request for continued examination under 37 CFR 1.114.

Karen Creasy
Petitions Examiner
Office of Petitions
Office of the Deputy Commissioner
for Patent Examination Policy

---

[1] The request to apply the issue fee to the new Notice may be satisfied by completing and returning the new Issue Fee Transmittal Form PTOL-85(b), which includes the following language thereon: "Commissioner for Patents is requested to apply the Issue Fee and Publication Fee (if any) or re-apply any previously paid issue fee to the application identified above." Petitioner is advised that, whether a fee is indicated as being due or not, the Issue Fee Transmittal Form **must** be completed and timely submitted to avoid abandonment. Note the language in bold text on the first page of the Notice of Allowance and Fee(s) Due (PTOL-85).

SPE RESPONSE FOR CERTIFICATE OF CORRECTION

Paper No.: X

DATE : July 10, 2008

TO SPE OF : ART UNIT 2616

SUBJECT : Request for Certificate of Correction for Appl. No.: 10/121654 Patent No.: 7046634 B2

A response is requested with respect to a request for a certificate of correction.

With respect to the change(s) requested to correct Office and/or Applicant's errors, should the patent read as shown in the certificate of correction attached herewith or the COCIN document(s), in IFW images for the above-identified patented application? No new matter should be introduced, nor should the scope or meaning of the claims be changed.

If the response is for an IFW, within 7 days, please complete and forward the response, to the employee (named below) via scanning into application images, using document code **COCX**

DO NOT SENT TO ATTORNEY

If the response is for a paper file wrapper, please complete the response and forward the response with the paper file wrapper, to the employee (named below), within 7 days, to:

Certificates of Correction Branch (CofC)
South Tower - 9A22
Palm Location 7580

You can fax the Directors/SPE response to 571-270-9990

LAMONTE NEWSOME
Certificates of Correction Branch
703-308-9390 ext. 112

Thank You For Your Assistance

The request for issuing the above-identified correction(s) is hereby:

Note your decision on the appropriate box.

✓ **Approved**	**All** changes apply.
☐ **Approved in Part**	Specify below which changes **do not** apply.
☐ **Denied**	State the reasons for denial below.

Comments: Approved all.

Formatted: Bullets and Numbering

Deleted:

2616

SPE **Art Unit**

PTOL-306 (REV. 7/03) U.S. DEPARTMENT OF COMMERCE Patent and Tradem ark Office

Under the Paperwork Reduction Act of 1995, no persons are required to respond to a collection of information unless it displays valid OMB control number.

PETITION TO ACCEPT UNINTENTIONALLY DELAYED PAYMENT OF MAINTENANCE FEE IN AN EXPIRED PATENT (37 CFR 1.378(c))

Patent Number	Issue Date (YYYY-MM-DD)	Application Number	Filing Date (YYYY-MM-DD)	Docket Number (if applicable)
6679309	2004-01-20	10121686	2002-04-15	

CAUTION: Maintenance fee (and surcharge, if any) payment must correctly identify: (1) the patent number and (2) the application number of the actual U.S. application leading to issuance of that patent to ensure the fee(s) is/are associated with the correct patent. 37 CFR 1.366(c) and (d).

SMALL ENTITY
☒ Patentee claims, or has previously claimed, small entity status. See 37 CFR 1.27.

LOSS OF ENTITLEMENT TO SMALL ENTITY STATUS
☐ Patentee is no longer entitled to small entity status. See 37 CFR 1.27(g)

NOT Small Entity		Small Entity	
Fee	Code	Fee	Code
○ 3 ½ year	(1551)	◉ 3 ½ year	(2551)
○ 7 ½ year	(1552)	○ 7 ½ year	(2552)
○ 11 ½ year	(1553)	○ 11 ½ year	(2553)

SURCHARGE
The surcharge required by 37 CFR 1.20(i)(2) (Fee Code 1558) must be paid as a condition of accepting unintentionally delayed payment of the maintenance fee.

MAINTENANCE FEE (37 CFR 1.20(e)-(g))
The appropriate maintenance fee must be submitted with this petition.

STATEMENT
THE UNDERSIGNED CERTIFIES THAT THE DELAY IN PAYMENT OF THE MAINTENANCE FEE TO THIS PATENT WAS UNINTENTIONAL

PETITIONER(S) REQUEST THAT THE DELAYED PAYMENT OF THE MAINTENANCE FEE BE ACCEPTED AND THE PATENT REINSTATED

THIS PORTION MUST BE COMPLETED BY THE SIGNATORY OR SIGNATORIES

37 CFR 1.378(d) states: "Any petition under this section must be signed by an attorney or agent registered to practice before the Patent and Trademark Office, or by the patentee, the assignee, or other party in interest."

I certify, in accordance with 37 CFR 1.4(d)(4) that I am

◉ An attorney or agent registered to practice before the Patent and Trademark Office

○ A sole patentee

○ A joint patentee; I certify that I am authorized to sign this submission on behalf of all the other patentees.

○ A joint patentee; all of whom are signing this e-petition

○ The assignee of record of the entire interest

Patent Practitioner			
A signature of the applicant or representative is required in accordance with 37 CFR 1.33 and 10.18. Please see 37 CFR 1.4(d) for the form of the signature			
Signature	/Chao-Chang David Pai/	Date (YYYY-MM-DD)	2008-02-29
Name	Chao-Chang David Pai	Registration Number	51195

This collection of information is required by 37 CFR 1.378(c). The information is required to obtain or retain a benefit by the public which is to file (and by the USPTO to process) an application. Confidentiality is governed by 35 U.S.C. 122 and 37 CFR 1.11 and 1.14. This collection is estimated to take 1 hour to complete, including gathering, preparing, and submitting the completed application form to the USPTO. Time will vary depending upon the individual case. Any comments on the amount of time you require to complete this form and/ or suggestions for reducing this burden, should be sent to the Chief Information Officer, U.S. Patent and Trademark Office, U.S. Department of Commerce, P.O. Box 1450, Alexandria, VA 22313-1450. DO NOT SEND FEES OR COMPLETED FORMS TO THIS ADDRESS. **This form can only be used when in conjunction with EFS-Web. If this form is mailed to the USPTO, it may cause delays in reinstating the patent.**

Privacy Act Statement

The Privacy Act of 1974 (P.L. 93-579) requires that you be given certain information in connection with your submission of the attached form related to a patent application or patent. Accordingly, pursuant to the requirements of the Act, please be advised that: (1) the general authority for the collection of this information is 35 U.S.C. 2(b)(2); (2) furnishing of the information solicited is voluntary; and (3) the principal purpose for which the information is used by the U.S. Patent and Trademark Office is to process and/or examine your submission related to a patent application or patent. If you do not furnish the requested information, the U.S. Patent and Trademark Office may not be able to process and/or examine your submission, which may result in termination of proceedings or abandonment of the application or expiration of the patent.

The information provided by you in this form will be subject to the following routine uses:

1. The information on this form will be treated confidentially to the extent allowed under the Freedom of Information Act (5 U.S.C. 552) and the Privacy Act (5 U.S.C. 552a). Records from this system of records may be disclosed to the Department of Justice to determine whether the Freedom of Information Act requires disclosure of these record s.

2. A record from this system of records may be disclosed, as a routine use, in the course of presenting evidence to a court, magistrate, or administrative tribunal, including disclosures to opposing counsel in the course of settlement negotiations.

3. A record in this system of records may be disclosed, as a routine use, to a Member of Congress submitting a request involving an individual, to whom the record pertains, when the individual has requested assistance from the Member with respect to the subject matter of the record.

4. A record in this system of records may be disclosed, as a routine use, to a contractor of the Agency having need for the information in order to perform a contract. Recipients of information shall be required to comply with the requirements of the Privacy Act of 1974, as amended, pursuant to 5 U.S.C. 552a(m).

5. A record related to an International Application filed under the Patent Cooperation Treaty in this system of records may be disclosed, as a routine use, to the International Bureau of the World Intellectual Property Organization, pursuant to the Patent Cooperation Treaty.

6. A record in this system of records may be disclosed, as a routine use, to another federal agency for purposes of National Security review (35 U.S.C. 181) and for review pursuant to the Atomic Energy Act (42 U.S.C. 218(c)).

7. A record from this system of records may be disclosed, as a routine use, to the Administrator, General Services, or his/her designee, during an inspection of records conducted by GSA as part of that agency's responsibility to recommend improvements in records management practices and programs, under authority of 44 U.S.C. 2904 and 2906. Such disclosure shall be made in accordance with the GSA regulations governing inspection of records for this purpose, and any other relevant (i.e., GSA or Commerce) directive. Such disclosure shall not be used to make determinations about individuals.

8. A record from this system of records may be disclosed, as a routine use, to the public after either publication of the application pursuant to 35 U.S.C. 122(b) or issuance of a patent pursuant to 35 U.S.C. 151. Further, a record may be disclosed, subject to the limitations of 37 CFR 1.14, as a routine use, to the public if the record was filed in an application which became abandoned or in which the proceedings were terminated and which application is referenced by either a published application, an application open to public inspections or an issued patent.

9. A record from this system of records may be disclosed, as a routine use, to a Federal, State, or local law enforcement agency, if the USPTO becomes aware of a violation or potential violation of law or regulation.

UNITED STATES PATENT AND TRADEMARK OFFICE

Commissioner for Patents
United States Patent and Trademark Office
P.O. Box 1450
Alexandria, VA 22313-1450
www.uspto.gov

In re Patent No. 6679309
Issue Date: January 20,2004
Application No. 10121686
Filed: April 15,2002
Attorney Docket No. HSUP3009/EM

:DECISION GRANTING PETITION
:UNDER 37 CFR 1.378(c)

This is a decision on the electronic petition, filed March 1,2008 ,under 37 CFR 1.378(c) to accept the unintentionally delayed payment of the 3.5 year maintenance fee for the above-identified patent.

The petition is GRANTED.

The maintenance fee is accepted, and the above-identified patent reinstated as of March 1,2008 . This decision also constitutes notice that the fee has been accepted. An electronic copy of the petition and this decision has been created as an entry in an Image File Wrapper. Nevertheless, petitioner should print and retain an independent copy

Telephone inquires related to this electronic decision should be directed to the Electronic Business Center at 1-866-217-9197.

SPE RESPONSE FOR CERTIFICATE OF CORRECTION

Paper No.:20070517

DATE : May 21, 2007

TO SPE OF : ART UNIT 1652

SUBJECT : Request for Certificate of Correction on Patent No.: 7,097,999

A response is requested with respect to the accompanying request for a certificate of correction.

Please complete this form and return with file, within **7** days to:
Certificates of Correction Branch - PK 3-910
Palm location **7590** - Tel. No. 305-8201

With respect to the change(s) requested, correcting Office and/or Applicant's errors, should the patent read as shown in the certificate of correction? No new matter should be introduced, nor should the scope or meaning of the claims be changed.

Thank You For Your Assistance **Certificates of Correction Branch**

The request for issuing the above-identified correction(s) is hereby:
Note your decision on the appropriate box.

☒ **Approved** **All** changes apply.

☐ **Approved in Part** Specify below which changes **do not** apply.

☐ **Denied** State the reasons for denial below.

Comments:

PONNATHAPU ACHUTAMURTHY
SUPERVISORY PATENT EXAMINER
TECHNOLOGY CENTER 1600

SPE: Ponnathapu Achutamurthy **Art Unit** 1652

UNITED STATES PATENT AND TRADEMARK OFFICE

COMMISSIONER FOR PATENTS
UNITED STATES PATENT AND TRADEMARK OFFICE
P.O. BOX 1450
ALEXANDRIA, VA 22313-1450
www.uspto.gov

CRAIG E. SHINNERS
LAW OFFICE OF CRAIG E. SHINNERS
301 E. COLORADO BLVD
SUITE 610
PASADENA, CA 91101

COPY MAILED

JUN 22 2005

OFFICE OF PETITIONS

In re Application of :
Vuong, et al. : DECISION ON PETITION
Application No. 10/121,703 :
Filed: April 11, 2002 :
Docket No.: 16-114 :

This is a decision on the petition under 37 C.F.R. § 1.137(b), filed April 4, 2005, to revive the above-identified application.

The petition is **GRANTED**.

This application became abandoned December 25, 2004 for failure to timely reply to the non-final Office action mailed September 24, 2004. The non-final Office action set a three (3) month shortened statutory period of time for reply. No extensions of time in accordance with 37 C.F.R. § 1.136 were timely requested. This decision precedes Notice of Abandonment.

A grantable petition pursuant to 37 C.F.R. § 1.137(b) must be accompanied by: (1) the required reply to the outstanding Office action or notice, unless previously filed; (2) the petition fee as set forth in 37 C.F.R. § 1.17(m); (3) a statement that the entire delay in filing the required reply from the due date for the reply until the filing of a grantable petition pursuant to 37 C.F.R. § 1.137(b) was unintentional; and (4) any terminal disclaimer (and fee set forth in 37 C.F.R. § 1.20(d)) required pursuant to 37 C.F.R. § 1.137(c).

The instant petition has been reviewed and found in compliance with the provisions of 37 C.F.R. § 1.137(b). Accordingly, the failure to timely submit a proper reply to the non-final Office action is accepted as having been unintentionally delayed.

This application will be forwarded to Technology Center 3700 for further processing.

Telephone inquiries concerning this matter may be directed to the undersigned at (571) 272-3205.

Alesia M. Brown
Petitions Attorney
Office of Petitions

UNITED STATES PATENT AND TRADEMARK OFFICE

Commissioner for Patents
United States Patent and Trademark Office
P.O. Box 1450
Alexandria, VA 22313-1450
www.uspto.gov

HUNTON & WILLIAMS LLP
INTELLECTUAL PROPERTY DEPARTMENT
1900 K STREET, N.W.
SUITE 1200
WASHINGTON, DC 20006-1109

COPY MAILED

DEC 0 4 2009

OFFICE OF PETITIONS

In re Patent No. 6,955,821 :
Issue Date: October 18, 2005 :
Application No. 10/121,706 :
Filed: April 15, 2002 :
Attorney Docket No. 31853.0008 :

NOTICE

This is a notice regarding your request for acceptance of a fee deficiency submission under 37 CFR 1.28.

The Office no longer investigates or rejects original or reissue patent under 37 CFR 1.56. **1098 Off. Gaz. Pat. Office 502 (January 3, 1989)**. Therefore, nothing in this Notice is intended to imply that an investigation was done.

There is no indication that the request is signed by a registered patent attorney or patent agent of record. However, in accordance with 37 CFR 1.34, the signature of Mr. Jason Okun appearing on the correspondence shall constitute a representation to the United States Patent and Trademark Office that he is authorized to represent the particular party on whose behalf he acts. If, Mr. Okun desires to receive correspondence regarding this file, the appropriate power of attorney documents must be submitted. A courtesy copy of this decision is being mailed to Mr. Okun the petitioner herein. However, until otherwise instructed, all future correspondence regarding this application file will be directed solely to the above-noted correspondence address of record.

Your fee deficiency submission under 37 CFR 1.28 is hereby **ACCEPTED**.

This patent is no longer entitled to small entity status. Accordingly, all future fees paid in this patent must be paid at the large entity rate.

Inquiries related to this communication should be directed to the undersigned at (571) 272-6059.

Alicia Kelley
Petitions Examiner
Office of Petitions

cc: JASON OKUN
FITZPATRICK, CELLA, HARPER & SCINTO
1290 AVENUE OF THE AMERICAS
NEW YORK, NY 10104-3800

UNITED STATES PATENT AND TRADEMARK OFFICE

COMMISSIONER FOR PATENTS
UNITED STATES PATENT AND TRADEMARK OFFICE
WASHINGTON, D.C. 20231
www.uspto.gov
DW 08-02

Paper No. 4

WOODCOCK WASHBURN LLP
ONE LIBERTY PLACE, 46TH FLOOR
1650 MARKET STREET
PHILADELPHIA PA 19103

COPY MAILED

AUG 2 6 2002

OFFICE OF PETITIONS

In re Application of	:	
Rodger et al.	:	
Application No. 10/121,752	:	ON PETITION
Filed: 12 April, 2002	:	
Atty's Dcket No. ASTB-0048	:	

This is a decision on the petition filed on 5 June, 2002, which is treated as a petition under 37 CFR 1.53(e) requesting that the above-identified application be accorded a filing date of 12 April, 2002, with Page 12 of the specification (description and claims) as a part of the original disclosure.

The petition is granted.

The application was filed on 12 April, 2002. However, on 21 May, 2002, Initial Patent Examination Division mailed a Notice of Omitted Items in a Nonprovisional Application stating that the application had been accorded a filing date, but that Page 12 of the specification (description and claims) appeared to have been omitted. A two (2)-month period for reply was set.

In response, on 5 June, 2002, petitioners filed the present petition, accompanied by a copy of Page 12 of the specification. Petitioners argue that Page 12 of the specification was filed with the other application papers on 12 April, 2002, but was subsequently misplaced in the U.S. Patent and Trademark Office (Office). In support, a copy of petitioners' postcard receipt was supplied with the present petition. The postcard receipt shows a stamp from the USPTO dated 04/12/02, which contains the above-identified application number. The postcard also identifies the application by inventors' names, docket number, and invention title, and itemizes the filing of, *inter alia*, Specification on pages 1-13, 13 claims on pages 14-16.

Petitioners request that the application, including Page 12 of the specification, be accorded a filing date of 12 April, 2002.

A review of the record reveals that Page 12 of the specification is not located among the application papers deposited on 12 April, 2002. However, the evidence is convincing that the application papers deposited on 12 April, 2002, included Page 12 of the specification which was subsequently misplaced in the Office. Therefore, the application, including Page 12 of the specification, is entitled to a filing date of 26 March, 2002.

The "Notice" mailed on 21 May, 2002, is vacated.

In view of the above, the petition is granted. As this petition was necessitated by USPTO error, the petition fee of $130.00 will be credited to counsel's deposit account, No. 23-3050 as authorized in the present petition.

The application will be processed and examined using the application papers filed on 12 April, 2002, and the copy of Page 12 of the specification supplied on 5 June, 2002.

The application is being returned to Initial Patent Examination Division for further processing with a filing date of 12 April, 2002, using the application papers filed on 12 April, 2002, and the copy of Page 12 of the specification (description and claims) supplied on 5 June, 2002.

Telephone inquires should be directed to the undersigned at 703 308-6918.

D Wood

Douglas I. Wood
Senior Petitions Attorney
Office of Petitions
Office of the Deputy Commissioner
for Patent Examination Policy

UNITED STATES PATENT AND TRADEMARK OFFICE

COMMISSIONER FOR PATENTS
UNITED STATES PATENT AND TRADEMARK OFFICE
P.O. BOX 1450
ALEXANDRIA, VA 22313-1450
WWW.USPTO.GOV

Paper No. 14

WOODCOCK WASHBURN
ONE LIBERTY PLACE-46TH FLOOR
1650 MARKET STREET
PHILADELPHIA, PA 19103

COPY MAILED

SEP 03 2003

OFFICE OF PETITIONS

In re Application of	:	
Albert Alexander Rodger et al	:	
Application No. 10/121,752	:	NOTICE
Filed: April 12, 2002	:	
Attorney Docket No. ASTB-0048	:	

This is a notice regarding your request for acceptance of a fee deficiency submission under 37 CFR 1.28. On September 1, 1998, the Court of Appeals for the Federal Circuit held that 37 CFR 1.28(c) is the sole provision governing the time for correction of the erroneous payment of the issue fee as a small entity. **See DH Technology v. Synergystex International, Inc. 154 F.3d 1333, 47 USPQ2d 1865 (Fed. Cir. Sept. 1, 1998).**

The Office no longer investigates or rejects original or reissue applications under 37 CFR 1.56. **1098 Off. Gaz. Pat. Office 502 (January 3, 1989)**. Therefore, nothing in this Notice is intended to imply that an investigation was done.

Your fee deficiency submission under 37 CFR 1.28 is hereby **ACCEPTED**.

Inquiries related to this communication should be directed to the Office of Petitions Staff at (703) 305-9285.

This file is being forwarded to Technology Center AU 2856.

Wan Laymon
Petitions Examiner
Office of Petitions
Office of the Deputy Commissioner
for Patent Examination Policy

UNITED STATES PATENT AND TRADEMARK OFFICE

JWC/MPD/AJH

COMMISSIONER FOR PATENTS
UNITED STATES PATENT AND TRADEMARK OFFICE
P.O. BOX 1450
ALEXANDRIA, VA 22313-1450
WWW.USPTO.GOV

AstB-0048

OIPE JC13
AUG 11 2004
PATENT & TRADEMARK OFFICE

RECEIVED

Paper No. 14

SEP 06 2003

WOODCOCK WASHBURN
ONE LIBERTY PLACE-46TH FLOOR
1650 MARKET STREET
PHILADELPHIA, PA 19103

RECEIVED
AUG 16 2004
TECH CENTER 2800

COPY MAILED
SEP 03 2003
OFFICE OF PETITIONS

In re Application of
Albert Alexander Rodger et al
Application No. 10/121,752
Filed: April 12, 2002
Attorney Docket No. ASTB-0048

NOTICE

This is a notice regarding your request for acceptance of a fee deficiency submission under 37 CFR 1.28. On September 1, 1998, the Court of Appeals for the Federal Circuit held that 37 CFR 1.28(c) is the sole provision governing the time for correction of the erroneous payment of the issue fee as a small entity. **See DH Technology v. Synergystex International, Inc. 154 F.3d 1333, 47 USPQ2d 1865 (Fed. Cir. Sept. 1, 1998).**

The Office no longer investigates or rejects original or reissue applications under 37 CFR 1.56. **1098 Off. Gaz. Pat. Office 502 (January 3, 1989).** Therefore, nothing in this Notice is intended to imply that an investigation was done.

Your fee deficiency submission under 37 CFR 1.28 is hereby **ACCEPTED**.

Inquiries related to this communication should be directed to the Office of Petitions Staff at (703) 305-9285.

This file is being forwarded to Technology Center AU 2856.

Wan Laymon
Wan Laymon
Petitions Examiner
Office of Petitions
Office of the Deputy Commissioner
for Patent Examination Policy

RECEIVED
SEP 12 2003
Kathy Kotary
Woodcock Washburn

RECEIVED
SEP 08 2003
DOCKET DEPT.
WWKMN

UNITED STATES PATENT AND TRADEMARK OFFICE

Commissioner for Patents
United States Patent and Trademark Office
P.O. Box 1450
Alexandria, VA 22313-1450
www.uspto.gov

WILLIAM M. SELENKE
28 DEWILL STREET
CINNCINNATI, OH 45218

COPY MAILED

MAR 1 0 2005

OFFICE OF PETITIONS

In re Application of :
Kenneth Davidson :
Application No. 10/121,755 : ON PETITION
Filed: April 12, 2002 :
Attorney Docket No. 103-02 :

This is a decision on the petition, filed January 5, 2005, under 37 CFR 1.137(b) to revive the above-identified application.

The petition is **DISMISSED.**

Any request for reconsideration of this decision must be submitted within TWO (2) MONTHS from the mail date of this decision. Extensions of time under 37 CFR 1.136(a) are permitted. The reconsideration request should include a cover letter entitled "**Renewed Petition under 37 CFR 1.137(b)**." This is **not** final agency action within the meaning of 5 U.S.C. § 704.

A grantable petition under 37 CFR 1.137(b) must be accompanied by: (1) the required reply, unless previously filed; (2) the petition fee as set forth in 37 CFR 1.17(m); (3) a statement that the entire delay in filing the required reply from the due date for the reply until the filing of a grantable petition pursuant to 37 CFR 1.137(b) was unintentional; and (4) any terminal disclaimer (and fee as set forth in 37 CFR 1.20(d)) required by 37 CFR 1.137(c). Where there is a question as to whether either the abandonment or the delay in filing a petition under 37 CFR 1.137 was unintentional, the Commissioner may require additional information. See MPEP 711.03(c)(III)(C) and (D). The instant petition lack(s) item(s) (2).

Effective December 8, 2004, a petition to revive unintentionally abandoned application (small entity) increased to $750 while the filing of a brief in support of an appeal increased to $250. Petitioner submitted by check $855 with petition on January 5, 2005 which leaves a balance of $145. The petition to revive can not be granted until the outstanding balance has been received.

Further correspondence with respect to this matter should be addressed as follows:

By mail: Mail Stop PETITION
Commissioner for Patents
Post Office Box 1450
Alexandria, VA 22313-1450

By hand: Customer Service Window
Randolph Building
401 Dulany Street
Alexandria, VA 22314

By facsimile: (703) 872-9306
ATTN: Office of Petitions

Telephone inquiries concerning this decision should be directed to the undersigned at (571) 272-3210.

Irvin Dingle
Petitions Examiner
Office of Petitions
Office of the Deputy Commissioner
for Patent Examination Policy

UNITED STATES PATENT AND TRADEMARK OFFICE

Commissioner for Patents
United States Patent and Trademark Office
P.O. Box 1450
Alexandria, VA 22313-1450
www.uspto.gov

Paper No. 12

WILLIAM M. SELENKE
5 DRUMMOND STREET
CINCINNATI, OH 45218

COPY MAILED

APR 0 6 2005

OFFICE OF PETITIONS

In re Application of	:	
Kenneth Davidson	:	
Application No. 10/121,755	:	ON PETITION
Filed: April 12, 2002	:	
Attorney Docket No. 103-02	:	

This is a decision on the renewed petition under 37 CFR 1.137(b), filed April 1, 2005, to revive the above-identified application.

The petition is **GRANTED**.

Telephone inquiries concerning this decision should be directed to Irvin Dingle at (571) 272-3210.

This file is being forwarded to Technology Center AU 3761 for further processing.

Irvin Dingle
Petitions Examiner
Office of Petitions
Office of the Deputy Commissioner
for Patent Examination Policy

UNITED STATES PATENT AND TRADEMARK OFFICE

Commissioner for Patents
United States Patent and Trademark Office
P.O. Box 1450
Alexandria, VA 22313-1450
www.uspto.gov

William M. Selenke
5 Drummond Street
Cincinnati OH 45218

COPY MAILED

JAN 04 2007

OFFICE OF PETITIONS

In re Application of Kenneth Davidson Application No. 10/121,755 Filed: April 12, 2002 Attorney Docket No: 103-02	: : : : :	DECISION ON PETITION

This is a decision on the petition under 37 CFR 1.137(b), filed May 26, 2006, to revive the above-identified application.

This petition is hereby **Dismissed**.

Any request for reconsideration must be submitted within TWO (2) MONTHS from the mail date of this decision. Extensions of time under 37 CFR 1.136(a) are permitted. The reconsideration request should include a cover letter entitled "Renewed Petition under 37 CFR 1.137(b)." This is **not** final agency action within the meaning of 5 U.S.C. §704.

This above-identified application became abandoned for failure to timely file a proper response to the Notice of Non-Compliant Appeal Brief pursuant to 37 CFR 37.47 which was mailed on September 7, 2005. No extensions of time were obtained under the provisions of 37 CFR 1.136(a). A Notice of Abandonment was mailed on March 13, 2006.

A grantable petition under 37 CFR 1.137(b) must be accompanied by: (1) the required reply, unless previously filed; (2) the petition fee as set forth in 37 CFR 1.17(m); (3) a statement that the entire delay in filing the required reply from the due date for the reply until the filing of a grantable petition pursuant to 37 CFR 1.137(b) was unintentional; and (4) any terminal disclaimer (and fee as set forth in 37 CFR 1.20(d)) required by 37 CFR 1.137(c). Where there is a question as to whether either the abandonment or the delay in filing a petition under 37 CFR 1.137 was unintentional, the Director may require additional information. See MPEP 711.03 (c)(III)(C) and (D).

The instant petition lacks item (1) the required reply. The Examiner has determined that the appeal brief submitted with the instant petition is non-complaint pursuant to 37 CFR 41.37. A new notice of non-compliant appeal brief accompanies this decision.

Further Correspondence with respect to this matter should be addressed as follows:

By mail:	Mail Stop Petition Commissioner for Patents P.O. Box 1450 Alexandria, VA 22313-1450
By facsimile:	(571) 273-8300
By delivery service: (FedEx, UPS, DHL, etc.)	U.S. Patent and Trademark Office Customer Service Window, Randolph Building 401 Dulany Street Alexandria, VA 22314

Telephone inquiries concerning this matter should be directed to the undersigned at (571) 272-3215.

Charlema R. Grant

Charlema R. Grant
Petitions Attorney
Office of Petitions

enclosure: Notice of Non-Compliant Appeal Brief

Notification of Non-Compliant Appeal Brief (37 CFR 41.37)	Application No. 10/121,755	Applicant(s) DAVIDSON, KENNETH	
	Examiner Jacqueline F. Stephens	Art Unit 3761	

--The MAILING DATE of this communication appears on the cover sheet with the correspondence address--

The Appeal Brief filed on 26 May 2006 is defective for failure to comply with one or more provisions of 37 CFR 41.37.

To avoid dismissal of the appeal, applicant must file anamended brief or other appropriate correction (see MPEP 1205.03) within **ONE MONTH or THIRTY DAYS** from the mailing date of this Notification, whichever is longer. **EXTENSIONS OF THIS TIME PERIOD MAY BE GRANTED UNDER 37 CFR 1.136.**

1. ☒ The brief does not contain the items required under 37 CFR 41.37(c), or the items are not under the proper heading or in the proper order.

2. ☐ The brief does not contain a statement of the status of all claims, (e.g., rejected, allowed, withdrawn, objected to, canceled), or does not identify the appealed claims (37 CFR 41.37(c)(1)(iii)).

3. ☐ At least one amendment has been filed subsequent to the final rejection, and the brief does not contain a statement of the status of each such amendment (37 CFR 41.37(c)(1)(iv)).

4. ☒ (a) The brief does not contain a concise explanation of the subject matter defined in each of the independent claims involved in the appeal, referring to the specification by page and line number and to the drawings, if any, by reference characters; and/or (b) the brief fails to: (1) identify, for each independent claim involved in the appeal and for each dependent claim argued separately, every means plus function and step plus function under 35 U.S.C. 112, sixth paragraph, and/or (2) set forth the structure, material, or acts described in the specification as corresponding to each claimed function with reference to the specification by page and line number, and to the drawings, if any, by reference characters (37 CFR 41.37(c)(1)(v)).

5. ☐ The brief does not contain a concise statement of each ground of rejection presented for review (37 CFR 41.37(c)(1)(vi))

6. ☒ The brief does not present an argument under a separate heading for each ground of rejection on appeal (37 CFR 41.37(c)(1)(vii)).

7. ☐ The brief does not contain a correct copy of the appealed claims as an appendix thereto (37 CFR 41.37(c)(1)(viii)).

8. ☐ The brief does not contain copies of the evidence submitted under 37 CFR 1.130, 1.131, or 1.132 or of any other evidence entered by the examiner **and relied upon by appellant in the appeal**, along with a statement setting forth where in the record that evidence was entered by the examiner, as an appendix thereto (37 CFR 41.37(c)(1)(ix)).

9. ☐ The brief does not contain copies of the decisions rendered by a court or the Board in the proceeding identified in the Related Appeals and Interferences section of the brief as an appendix thereto (37 CFR 41.37(c)(1)(x)).

10. ☒ Other (including any explanation in support of the above items):

'Summary of claimed subject matter' heading is missing. In the Summary of claimed subject matter, a concise explanation of the subject matter defined in each of the independent claims involved in the appeal, must refer to the specification by page and line number, and to the drawing, if any, by reference characters. In the Arguments section a separate heading is required for each ground of rejection. Any claims argued separately should be placed under a subheading. Claim 2, 3, and 4 should be identified as original and claims1and 5-7 should be identified as previously presented claims .

Jacqueline F Stephens
Primary Examiner
Art Unit: 3761

UNITED STATES PATENT AND TRADEMARK OFFICE

Commissioner for Patents
United States Patent and Trademark Office
P.O. Box 1450
Alexandria, VA 22313-1450
www.uspto.gov

William M. Selenke
5 Drummond Street
Cincinnati OH 45218

COPY MAILED

JUN 23 2008

OFFICE OF PETITIONS

In re Application of
Kenneth Davidson
Application No. 10/121,755
Filed: April 12, 2002
Attorney Docket No: 103-02

DECISION ON PETITION

This is a decision on the petition under 37 CFR 1.137(b), filed October 19, 2007, to revive the above-identified application.

This petition is hereby **Dismissed**.

Any request for reconsideration must be submitted within TWO (2) MONTHS from the mail date of this decision. Extensions of time under 37 CFR 1.136(a) are permitted. The reconsideration request should include a cover letter entitled "Renewed Petition under 37 CFR 1.137(b)." This is **not** final agency action within the meaning of 5 U.S.C. §704.

This above-identified application became abandoned for failure to timely file a proper response to the Notice of Non-Compliant Appeal Brief pursuant to 37 CFR 37.47 which was mailed on September 7, 2005. No extensions of time were obtained under the provisions of 37 CFR 1.136(a). A Notice of Abandonment was mailed on March 13, 2006.A petition filed under 37 CFR 1.137(b) was dismissed on January 4, 2007.

The renewed petition is untimely. [1]

There are three periods to be considered during the evaluation of a petition under 37 CFR 1.137(b):

[1]The examiner has not reviewed the supplemental appeal brief submitted October 19, 2007.

(1) the delay in reply that originally resulted in the abandonment;

(2) the delay in filing an initial petition pursuant to 37 CFR 1.137(b) to revive the application; and

(3) the delay in filing a grantable petition pursuant to 37 CFR 1.137(b) to revive the application.

Currently, the delay has not been shown to the satisfaction of the Director to be unintentional for periods (3).

Where the applicant deliberately chooses not to seek or persist in seeking the revival of an abandoned application, or where the applicant deliberately chooses to delay seeking the revival of an abandoned application, the resulting delay in seeking revival of the abandoned application cannot be considered as "unintentional" within the meaning of 37 CFR 1.137(b). *See* MPEP 711.03(c).

The language of both 35 U.S.C. § 41(a)(7) and 37 CFR 1.137(b) are clear and unambiguous, and, furthermore, without qualification. That is, the delay in filing the reply during prosecution, as well as in filing the petition seeking revival, must have been, without qualification, "unintentional" for the reply to now be accepted on petition. The Office requires that the entire delay be at least unintentional as a prerequisite to revival of an abandoned application to prevent abuse and injury to the public. *See* H.R. Rep. No. 542, 97th Cong., 2d Sess. 7 (1982), reprinted in 1982 U.S.C.C.A.N. 771 ("[i]n order to prevent abuse and injury to the public the Commissioner . . . could require applicants to act promptly after becoming aware of the abandonment"). The December 1997 change to 37 CFR 1.137 did not create any new right to overcome an intentional delay in seeking revival, or in renewing an attempt at seeking revival, of an abandoned application. *See* Changes to Patent Practice and Procedure; Final Rule Notice, 62 Fed. Reg. 53131, 53160 (October 10, 1997), 1203 Off. Gaz. Pat. Office 63, 87 (October 21, 1997), which clearly stated that any protracted delay could trigger, as here, a request for additional information. As the courts have since made clear, a protracted delay in seeking revival, as here, requires a petitioner's detailed explanation seeking to excuse the delay as opposed to USPTO acceptance of a general allegation of unintentional delay. *See* Lawman Armor v. Simon, 2005 U.S. Dist. LEXIS 10843, 74 USPQ2d 1633, at 1637-8 (DC EMich 2005); Field Hybrids, LLC v. Toyota Motor Corp., 2005 U.S. Dist. LEXIS 1159 (D. Minn Jan. 27, 2005) at *21-*23. Statements are required from any and all persons having firsthand knowledge of the circumstances surrounding the protracted delay, after the abandonment date, in seeking revival.

Applicant's failure to carry the burden of proof to establish that the "entire" delay was "unavoidable" or "unintentional" may lead to the denial of a petition under 37 CFR 1.137(b), regardless of the circumstances that originally resulted in the abandonment of

the application. *See also* New York University v. Autodesk, 2007 U.S. DIST LEXIS, U.S.District LEXIS 50832, *10 -*12 (S.D.N.Y. 2007)(protracted delay in seeking revival undercuts assertion of unintentional delay).

Further Correspondence with respect to this matter should be addressed as follows:

By mail:	Mail Stop Petition Commissioner for Patents P.O. Box 1450 Alexandria, VA 22313-1450
By facsimile:	(571) 273-8300
By delivery service: (FedEx, UPS, DHL, etc.)	U.S. Patent and Trademark Office Customer Service Window, Randolph Building 401 Dulany Street Alexandria, VA 22314

Telephone inquiries concerning this matter should be directed to the undersigned at (571) 272-3215.

Charlema R. Grant

Charlema R. Grant
Petitions Attorney
Office of Petitions

UNITED STATES PATENT AND TRADEMARK OFFICE

Commissioner for Patents
United States Patent and Trademark Office
P.O. Box 1450
Alexandria, VA 22313-1450
www.uspto.gov

William M. Selenke
5 Drummond Street
Cincinnati OH 45218

MAILED

JUN 19 2009

OFFICE OF PETITIONS

In re Application of :
Kenneth Davidson :
Application No. 10/121,755 : DECISION ON PETITION
Filed: April 12, 2002 :
Attorney Docket No: 103-02 :

This is a decision on the petition under 37 CFR 1.137(b), filed August 21, 2008, to revive the above-identified application.

This petition is hereby **DISMISSED**.

Any request for reconsideration must be submitted within TWO (2) MONTHS from the mail date of this decision. Extensions of time under 37 CFR 1.136(a) are permitted. The reconsideration request should include a cover letter entitled "Renewed Petition under 37 CFR 1.137(b)." This is **not** final agency action within the meaning of 5 U.S.C. §704.

This above-identified application became abandoned for failure to timely file a proper response to the Notice of Non-Compliant Appeal Brief pursuant to 37 CFR 37.47 which was mailed on September 7, 2005. No extensions of time were obtained under the provisions of 37 CFR 1.136(a). A Notice of Abandonment was mailed on March 13, 2006. Petition filed under 37 CFR 1.137(b) were dismissed on January 4, 2007 and June 23, 2008.

A grantable petition under 37 CFR 1.137(b) must be accompanied by: (1) the required reply, unless previously filed; (2) the petition fee as set forth in 37 CFR 1.17(m); (3) a statement that the entire delay in filing the required reply from the due date for the reply until the filing of a grantable petition pursuant to 37 CFR 1.137(b) was unintentional; and (4) any terminal disclaimer (and fee as set forth in 37 CFR 1.20(d)) required by 37 CFR 1.137(c). Where there is a question as to whether either the abandonment or the delay in filing a petition under 37 CFR 1.137 was unintentional, the Director may require

additional information. See MPEP 711.03 (c)(III)(C) and (D).

The instant petition lacks item (1) the required reply. The Examiner has determined that the appeal brief submitted with the instant petition is non-complaint pursuant to 37 CFR 41.37. A new notice of non-compliant appeal brief accompanies this decision.

Further Correspondence with respect to this matter should be addressed as follows:

By mail:	Mail Stop Petition Commissioner for Patents P.O. Box 1450 Alexandria, VA 22313-1450
By facsimile:	(571) 273-8300
By delivery service: (FedEx, UPS, DHL, etc.)	U.S. Patent and Trademark Office Customer Service Window, Randolph Building 401 Dulany Street Alexandria, VA 22314

Telephone inquiries concerning this matter should be directed to the undersigned at (571) 272-3215.

Charlema R. Grant

Charlema R. Grant
Petitions Attorney
Office of Petitions

Enclosure

Notification of Non-Compliant Appeal Brief (37 CFR 41.37)	Application No. 10/121,755	Applicant(s) DAVIDSON, KENNETH	
	Examiner Jacqueline F Stephens	Art Unit 3761	

--The MAILING DATE of this communication appears on the cover sheet with the correspondence address--

The Appeal Brief filed on *07 January 2005* is defective for failure to comply with one or more provisions of 37 CFR 41.37.

To avoid dismissal of the appeal, applicant must file a complete new brief in compliance with 37 CFR 41.37 within **ONE MONTH or THIRTY DAYS** from the mailing date of this Notification, whichever is longer. **EXTENSIONS OF THIS TIME PERIOD MAY BE GRANTED UNDER 37 CFR 1.136.**

1. ☒ The brief does not contain the items required under 37 CFR 41.37(c), or the items are not under the proper heading or in the proper order.

2. ☒ The brief does not contain a statement of the status of all claims, (e.g., rejected, allowed or confirmed, withdrawn, objected to, canceled), or does not identify the appealed claims (37 CFR 41.37(c)(1)(iii)).

3. ☒ At least one amendment has been filed subsequent to the final rejection, and the brief does not contain a statement of the status of each such amendment (37 CFR 41.37(c)(1)(iv)).

4. ☒ (a) The brief does not contain a concise explanation of the subject matter defined in each of the independent claims involved in the appeal, referring to the specification by page and line number and to the drawings, if any, by reference characters; and/or (b) the brief fails to: (1) identify, for each independent claim involved in the appeal and for each dependent claim argued separately, every means plus function and step plus function under 35 U.S.C. 112, sixth paragraph, and/or (2) set forth the structure, material, or acts described in the specification as corresponding to each claimed function with reference to the specification by page and line number, and to the drawings, if any, by reference characters (37 CFR 41.37(c)(1)(v)).

5. ☒ The brief does not contain a concise statement of each ground of rejection presented for review (37 CFR 41.37(c)(1)(vi))

6. ☒ The brief does not present an argument under a separate heading for each ground of rejection on appeal (37 CFR 41.37(c)(1)(vii)).

7. ☒ The brief does not contain a correct copy of the appealed claims as an appendix thereto (37 CFR 41.37(c)(1)(viii)).

8. ☐ The brief does not contain copies of the evidence submitted under 37 CFR 1.130, 1.131, or 1.132 or of any other evidence entered by the examiner and relied upon by appellant in the appeal, along with a statement setting forth where in the record that evidence was entered by the examiner, as an appendix thereto (37 CFR 41.37(c)(1)(ix)).

9. ☐ The brief does not contain copies of the decisions rendered by a court or the Board in the proceeding identified in the Related Appeals and Interferences section of the brief as an appendix thereto (37 CFR 41.37(c)(1)(x)).

10. ☐ Other (including any explanation in support of the above items):

UNITED STATES PATENT AND TRADEMARK OFFICE

Commissioner for Patents
United States Patent and Trademark Office
P.O. Box 1450
Alexandria, VA 22313-1450
www.uspto.gov

APR - 5 2005

WOODCOCK WASHBURN, LLP
ONE LIBERTY PLACE
46TH FLOOR
PHILADELPHIA, PA 19103

In re Application of	:
Adrienne Dubin et al	:
Serial No.: 10/121,759	: PETITION DECISION
Filed: April 12, 2002	:
Attorney Docket No.: JJPR-0007	:

This is in response to the petition under 37 CFR 1.181, filed January 10, 2005, requesting withdrawal of abandonment based on failure to receive an Office action.

A review of the file history shows that the examiner mailed an Office action to applicants on October 29, 2003, setting a three month shortened statutory period for. Upon failure to receive a reply a Notice of Abandonment was mailed to applicants on September 17, 2004. Applicants state that they never received the Office action and provide statements and docket and mail logs substantiating the statements. In view of the evidence presented the Notice of Abandonment is withdrawn and the application restored to pending status with the mailing of this decision.

The petition is **GRANTED**. Applicants' delay of more than two months for filing the petition from the date of notification of the abandoned status (as set forth in 37 CFR 1.181) is noted, but will be excused this one time. Such delays may not be excused in the future.

The application will be forwarded to the examiner for mailing of a new Office action.

There is no fee for this petition and the petition fee paid of $130.00 will be credited to applicants' Deposit Account No. 23-3050, as directed.

Should there be any questions about this decision please contact William R. Dixon, Jr., by letter addressed to Director, TC 1600, at the address listed above, or by telephone at 571-272-0519 or by facsimile sent to the general Office facsimile number, 571-273-8300.

Jasemine C. Chambers
Director, Technology Center 1600

UNITED STATES PATENT AND TRADEMARK OFFICE

Commissioner for Patents
United States Patent and Trademark Office
P.O. Box 1450
Alexandria, VA 22313-1450
www.uspto.gov

TEXAS INSTRUMENTS
INCORPORATED
P O BOX 655474, M/S 3999
DALLAS, TX 75265

COPY MAILED
SEP 28 2006
OFFICE OF PETITIONS

In re Application of

Staszewski, et al. :

Application No. 10/121,761

: DECISION ON PETITION

Filed: April 12, 2002

:

Attorney Docket No. TI-33979

This is a decision on the petition under 37 CFR 1.137(b), filed January 26, 2006, to revive the above-identified application.

The petition is **GRANTED.**

The above-cited application became abandoned for failure to reply in a timely manner to the non-final Office action mailed June 27, 2005, which set a shortened statutory period for reply of three months from its mailing date. No extension of time pursuant to 37 CFR 1.136(a) was obtained within the allowable period. Accordingly, the application became abandoned on September 28, 2005.

The amendment filed January 26, 2006, is noted.

The above-identified application has been abandoned for an extended period of time. The Patent and Trademark Office is relying on petitioner's duty of candor and good faith and accepting the statement that the entire delay in filing the required reply form the due date for the reply until the filing of a grantable petition pursuant to 37 CFR 1.137(b) was unintentional. See Changes to Patent Practice and Procedure, 62 Fed. Reg. at 53160 and 53178; 1203 Off. Gaz. Pat. Office at 88 and 103 (responses to comments 64 and 109) (applicant obligated under 37 CFR 10.18 to inquire into the underlying facts and circumstances when providing the statement required by 37 CFR 1.137(b) to the Patent and Trademark Office

The application is being forwarded to Technology Center 2600, GAU 2618 for further processing.

Telephone inquiries concerning this decision should be directed to the undersigned at (571) 272-3222.

Kenya A. McLaughlin
Petitions Attorney
Office of Petitions

UNITED STATES PATENT AND TRADEMARK OFFICE

Commissioner for Patents
United States Patent and Trademark Office
P.O. Box 1450
Alexandria, VA 22313-1450
www.uspto.gov

TEXAS INSTRUMENTS INCORPORATED
P. O. BOX 655474, M/S 3999
DALLAS, TX 75265

COPY MAILED

DEC 17 2007

OFFICE OF PETITIONS

In re Application of	:	
Robert B. Staszewski et al	:	
Application No. 10/121,761	:	DECISION ON PETITION
Filed: April 12, 2002	:	
Attorney Docket No. TI-33979	:	

This is a decision on the petition under 37 CFR 1.137(b), filed October 3, 2007, to revive the above-identified application.

The petition is **GRANTED**.

The application became abandoned for failure to timely reply within the meaning of 37 CFR 1.113 to the final Office action, mailed March 20, 2007, which set a shortened statutory period for reply of three (3) months. A two (2) month extension of time under the provisions of 37 CFR 1.136(a) was obtained. Accordingly, the application became abandoned on August 21, 2006.

The petition satisfies the requirements of 37 CFR 1.137(b) in that petitioner has supplied (1) the reply in the form of a request for continued examination, $810 filing fee, and submission as required by 37 CFR 1.114 (previously filed on August 14, 2007, (2) the petition fee of $1,540, and (3) an adequate statement of unintentional delay.[1] Accordingly, the failure to timely reply to the final Office action of March 20, 2007 is accepted as being unintentionally delayed.

---

[1] The rule at 37 CFR 1.137(b)(3) requires a statement that "the entire delay in filing the required reply from the due date for the reply until the filing of a grantable petition pursuant to 37 CFR 1.137(b) was unintentional." Since the statement appearing in the petition varies from the language required by 37 CFR 1.137(b)(3), the statement is being construed as the required statement. Petitioner must notify the Office if this is **not** a correct reading of the statement appearing in the petition.

Telephone inquiries concerning this decision should be directed to the undersigned at (571) 272-3218.

This application is being referred to Technology Center AU 2618 for processing the request for continued examination and for appropriate action in the normal course of business on the submission under 37 CFR 1.114 received August 14, 2007.

Frances Hicks
Petitions Examiner
Office of Petitions

UNITED STATES PATENT AND TRADEMARK OFFICE

COMMISSIONER FOR PATENTS
UNITED STATES PATENT AND TRADEMARK OFFICE
P.O. BOX 1450
ALEXANDRIA, VA 22313-1450

www.uspto.gov

THOMAS J. D'AMICO
DICKSTEIN, SHAPIRO, MORIN, & OSHINSKY
2101 L STREET NW
WASHINGTON, DC 20037-1526

COPY MAILED

SEP 2 2 2004

OFFICE OF PETITIONS

In re Application of :
Terry L. Gilton :
Application No. 10/121,790 :
Filed: April 10, 2002 :
For: PROGRAMMABLE CONDUCTOR :
MEMORY CELL STRUCTURE AND METHOD :
THEREFOR :

ON PETITION

This is a decision on the petition, filed September 20, 2004, under 37 CFR 1.313(c)(2) to withdraw the above-identified application from issue after payment of the issue fee.

The petition is **GRANTED**.

The above-identified application is withdrawn from issue for consideration of a submission under 37 CFR 1.114 (request for continued examination). See 37 CFR 1.313(c)(2).

Petitioner is advised that the issue fee paid on June 16, 2004 in the above-identified application cannot be refunded. If, however, the above-identified application is again allowed, petitioner may request that it be applied towards the issue fee required by the new Notice of Allowance. [1]

Telephone inquiries relating to this decision should be directed to the undersigned at (703) 305-9220.

The application is being referred to Technology Center AU 2815 for further processing of the request for continued examination under 37 CFR 1.114 filed September 20, 2004.

Sherry D. Brinkley
Petitions Examiner
Office of Petitions
Office of the Deputy Commissioner
for Patent Examination Policy

[1]The request to apply the issue fee to the new Notice may be satisfied by completing and returning the new Issue Fee Transmittal Form PTOL-85(b), which includes the following language thereon: "Commissioner for Patents is requested to apply the Issue Fee and Publication Fee (if any) or re-apply any previously paid issue fee to the application identified above." Petitioner is advised that, whether a fee is indicated as being due or not, the Issue Fee Transmittal Form **must** be completed and timely submitted to avoid abandonment. Note the language in bold text on the first page of the Notice of Allowance and Fee(s) Due (PTOL-85).

UNITED STATES PATENT AND TRADEMARK OFFICE

Commissioner for Patents
United States Patent and Trademark Office
P.O. Box 1450
Alexandria, VA 22313-1450
www.uspto.gov

BINGHAM MCCUTCHEN LLP
2020 K STREET, N.W.
INTELLECTUAL PROPERTY DEPARTMENT
WASHINGTON, DC 20006

COPY MAILED
OCT 24 2007
OFFICE OF PETITIONS

In re Application of
Jian L. Wang
Application No. 10/121,823
Filed: April 12, 2002
Attorney Docket No. 15772.0057

ON PETITION

This is a decision on the petition filed June 27, 2007, to revive the above-identified application under the provisions of 37 CFR 1.137(b).

The petition is **GRANTED**.

The application became abandoned for failure to respond in a timely manner to a Notice of Drawing Inconsistency With Specification mailed January 5, 2007, which set a ONE MONTH or THIRTY (30) DAY period to respond. A Notice of Abandonment was mailed on May 24, 2007. In response, on June 27, 2007, the present petition was filed.

The petition satisfies the conditions for revival pursuant to the provisions of 37 CFR 1.137(b) in that petitioner has supplied (1) the reply in the form of an amendment; (2) the petition fee of $1,500; and (3) an adequate statement of unintentional delay[1].

The application is being forwarded to the Office of Publications for consideration of the response filed June 27, 2007.

Telephone inquires related to this decision may be directed to the undersigned at (571) 272-3204. Status inquires related to processing at Publishing Division should be directed to (571) 272-4200.

Sherry D. Brinkley
Petitions Examiner
Office of Petitions

[1] 37 CFR 1.137(b)(3) requires a statement that the entire delay in filing the required reply from the due date for the reply until the filing of a grantable petition pursuant to 37 CFR 1.137(b) was unintentional. Although the statement contained in the petition varies from the language required by 37 CFR 1.137(b)(3), the statement will be construed as the statement required by 37 CFR 1.137(b)(3). Petitioner must notify the Office if this is **not** a correct interpretation of the statement contained in the instant petition.

OIPE JC88
JUL 16 2002
PATENT & TRADEMARK OFFICE

UNITED STATES DEPARTMENT OF COMMERCE
Patent and Trademark Office
ASSISTANT SECRETARY AND COMMISSIONER
OF PATENTS AND TRADEMARKS
Washington, D.C. 20231

#4

COPY OF PAPERS ORIGINALLY FILED

Paul D. Tripodi
Pretty Schroeder & Poplawski
444 South Flower Street
Suite 2000
Los Angeles CA 90071

COPY MAILED

JUN 29 1998

SPECIAL PROGRAMS OFFICE
DAC FOR PATENTS

In re Application of	:
Krill, Jr., Mirsky, and Murray	:
Application No. 08/826,088	: DECISION ACCORDING STATUS
Filed: March 24, 1997	: UNDER 37 CFR 1.47(a)
For: Radiation Shielding	:
Materials and Containers	:
Incorporating Same	

This is in response to the "Renewed Petition Under 37 CFR 1.47(a)," filed January 30, 1998.

The petition is granted.

Petitioner has shown that the non-signing inventor has refused to join in the filing of the above-identified application after having been presented with the application papers.

The above-identified application and papers have been reviewed and found in compliance with 37 CFR 1.47(a). This application is hereby accorded Rule 1.47(a) status.

As provided in Rule 1.47(a), this Office will forward notice of this application's filing to non-signing inventor at the address given in the Declaration. Notice of the filing of this application will also be published in the Official Gazette.

After mailing this decision, the above-identified application will be forwarded to Group Art Unit 1941 for further processing.

It is noted that a power of attorney has not been given and that there is no attorney of record in the above-identified application. A power of attorney may be signed by the available inventors or by an assignee of the entire interest (including that of Mr. Murray).

Telephone inquiries regarding this decision should be directed to the undersigned at (703)306-3159.

Karin Tyson
Karin Tyson
Senior Legal Advisor/Special Program Law Office
Office of the Deputy Assistant Commissioner
for Patent Policy and Projects

UNITED STATES PATENT AND TRADEMARK OFFICE

Commissioner for Patents
United States Patent and Trademark Office
P.O. Box 1450
Alexandria, VA 22313-1450
www.uspto.gov

SHOOK HARDY & BACON LLP
(C/O MICROSOFT CORPORATION)
INTELLECTUAL PROPERTY DEPARTMENT
2555 GRAND BOULEVARD
KANSAS CITY, MO 64108-2613

MAILED

MAY 05 2009

OFFICE OF PETITIONS

In re Application of
Walter I. Wittel Jr. et al
Application Number: 10/121,895
Filing Date: April 12, 2002
Attorney Docket Number: MFCP.95274

ON PETITION

This is a decision on the petition filed May 28, 2008 which is being treated as a petition under 37 CFR 1.183 to waive the need for the signature of Walter I. Wittel, Jr. on the 37 CFR 1.131 declaration.[1]

The petition is **granted.**

37 CFR 1.131(a) states,

> When any claim of an application or a patent under reexamination is rejected, the inventor of the subject matter of the rejected claim, the owner of the patent under reexamination, or the party qualified under §§ 1.42, 1.43, or 1.47, may submit an appropriate oath or declaration to establish invention of the subject matter of the rejected claim prior to the effective date of the reference or activity on which the rejection is based.

Based on 37 CFR 1.131(a), the following parties may make an affidavit or declaration under 37 CFR 1.131 without need for a petition:

(1) All the inventors of the subject matter claimed.

(2) An affidavit or declaration by less than all named inventors of an application is accepted where it is shown that less than all named inventors of an application invented the subject matter of the claim or claims under rejection. For example, one of two joint inventors is accepted where it is shown that one of the joint inventors is the sole inventor of the claim or claims under rejection.

[1] Once an application has received a fully executed oath or declaration and been placed on the files for examination, the provisions of 37 CFR 1.47 no longer apply. The instant petition is properly treated under 37 CFR 1.183.

(3) If a petition under 37 CFR 1.47 was granted or the application was accepted under 37 CFR 1.42 or 1.43, the affidavit or declaration may be signed by the 37 CFR 1.47 applicant or the legal representative, where appropriate.

(4) The owner if the affidavit or declaration is being filed for a patent under reexamination.

The Office has stated the signature requirements can be waived in certain circumstances.

(1) The assignee or other party in interest can sign the affidavit or declaration if none of the inventors will sign the declaration. See MPEP 714.

(2) The affidavit or declaration can be signed by fewer than all the inventors if the other inventors are deceased, refuse to sign, or are unavailable. The affidavit or declaration must show reduction to practice or conception of the invention coupled with due diligence by the non-signing inventors.

In view of the efforts recounted in the petition to obtain the signature of Walter I. Wittel Jr., it is agreed that justice would be served by waiving the requirement for his signature on the declaration filed May 28, 2008.

The aforementioned declaration has been accepted, on petition, and placed in the file.

Telephone inquires related to this decision should be directed to Irvin Dingle at (571) 272-3210.

David Buecl
Petitions Examiner
Office of Petitions

SPE Edward Urban ~~Wendy~~ Graber

SPE RESPONSE FOR CERTIFICATE OF CORRECTION 10/121,896

Paper No.: _____

DATE : 9/9/05

TO SPE OF : ART UNIT 2612

SUBJECT : Request for Certificate of Correction on Patent No.: 6919922

A response is requested with respect to the accompanying request for a certificate of correction.

Please complete this form and return with file, within 7 days to:
Palm location **7580, Certificates of Correction Branch – South Tower – 9A22**
If response is for an IFW, **return to employee (named below) via PUBSCofC Team in MADRAS.**
With respect to the change(s) requested, correcting Office and/or Applicant's errors, should the patent read as shown in the certificate of correction (COCIN)? No new matter should be introduced, nor should the scope or meaning of the claims be changed.

Thank You For Your Assistance

Lamonte M. Newsome
Certificates of Correction Branch
Tel. No. 703-305-8309

The request for issuing the above-identified correction(s) is hereby:
Note your decision on the appropriate box.

☒ **Approved** — **All** changes apply.

☐ **Approved in Part** — Specify below which changes **do not** apply.

☐ **Denied** — State the reasons for denial below.

Comments:

The foreign priority document filed on 7/16/02 is accepted, and 35 USC 119(a-d) conditions met. (see attached

EDWARD F. URBAN
SUPERVISORY PATENT EXAMINER
TECHNOLOGY CENTER 2600
SPE

2618
Art Unit

PTOL-306 (REV. 7/03)

U.S. DEPARTMENT OF COMMERCE Patent and Trademark Office

UNITED STATES PATENT AND TRADEMARK OFFICE

UNITED STATES DEPARTMENT OF COMMERCE
United States Patent and Trademark Office
Address: COMMISSIONER FOR PATENTS
P.O. Box 1450
Alexandria, Virginia 22313-1450
www.uspto.gov

Bib Data Sheet

CONFIRMATION NO. 3830

SERIAL NUMBER	FILING OR 371(c) DATE	CLASS	GROUP ART UNIT	ATTORNEY DOCKET NO.
10/121,896	04/11/2002 RULE	348	2612	112857-322

APPLICANTS

Shiho Nagano, Tokyo, JAPAN;
Takahiro Ishii, Tokyo, JAPAN;
Yasushi Fukuda, Kanagawa, JAPAN;

**** CONTINUING DATA ****************************

**** FOREIGN APPLICATIONS ************************

JAPAN P2001-113985 04/12/2001

IF REQUIRED, FOREIGN FILING LICENSE GRANTED
** 05/21/2002

Foreign Priority claimed ☑ yes ☐ no 35 USC 119 (a-d) conditions met ☑ yes ☐ no ☐ Met after Allowance Verified and Acknowledged Examiner's Signature Initials	STATE OR COUNTRY JAPAN	SHEETS DRAWING 10	TOTAL CLAIMS 9	INDEPENDENT CLAIMS 3

ADDRESS
29175

TITLE

IMAGE PROCESSING APPARATUS AND METHOD, RECORDING MEDIUM, AND PROGRAM

FILING FEE RECEIVED		
1170	FEES: Authority has been given in Paper No. _____ to charge/credit DEPOSIT ACCOUNT No. _____ for following:	☐ All Fees ☐ 1.16 Fees (Filing) ☐ 1.17 Fees (Processing Ext. of time) ☐ 1.18 Fees (Issue) ☐ Other _____ ☐ Credit

UNITED STATES DEPARTMENT OF COMMERCE
Patent and Trademark Office

Address: COMMISSIONER OF PATENTS AND TRADEMARKS
Washington, D.C. 20231

10/121909

SERIAL NUMBER	FILING DATE	FIRST NAMED APPLICANT	ATTORNEY DOCKET NO.

EXAMINER	
ART UNIT	PAPER NUMBER

DATE MAILED:

The decision on the petition filed in the above entitled application is as follows:

☐ Delay in Prosecution Held Unavoidable (35 U.S.C. 133),

Petition Granted _____

☐ Delayed Payment of Issue Fee Accepted (35 U.S.C. 151),

Petition Granted _____

☒ Petition Granted The petition under 37 CFR 1.84(a)(2) regarding color photograph filed 4/12/02 is hereby granted

☐ Petition Denied _____

☐ Petition Dismissed _____

By direction of the Deputy
Assistant Commissioner for Patents

_____

Christina Chan
CHRISTINA CHAN
SUPERVISORY PATENT EXAMINER
TECHNOLOGY CENTER 1600

UNITED STATES PATENT AND TRADEMARK OFFICE

COMMISSIONER FOR PATENTS
UNITED STATES PATENT AND TRADEMARK OFFICE
P.O. BOX 1450
ALEXANDRIA, VA 22313-1450
www.uspto.gov

Paper No.

FISH & RICHARDSON PC
P.O. BOX 1022
MINNEAPOLIS, MN 55440-1022

COPY MAILED

JAN 10 2006

OFFICE OF PETITIONS

In re Patent No. 6,898,359	:	
Soljacic et al.	:	DECISION ON REQUEST
Issue Date: May 24, 2005	:	FOR RECONSIDERATION OF
Application No. 10/121,930	:	PATENT TERM ADJUSTMENT
Filed: April 12, 2002	:	and
Atty Docket No. 13445-011001	:	NOTICE OF INTENT TO ISSUE
/OG8 (6296)	:	CERTIFICATE OF CORRECTION
	:	

This is a decision on the "APPLICATION FOR PATENT TERM ADJUSTMENT UNDER 37 CFR 1.705(D)" filed June 30, 2005. Patentees request that the Patent Term Adjustment for the above-identified patent be set at 291 days.

The request for reconsideration of the patent term adjustment indicated in the patent is **GRANTED**.

The patent term adjustment indicated in the patent is to be corrected by issuance of a certificate of correction showing a revised Patent Term Adjustment of two hundred ninety-one (291) days.

On May 24, 2005, the above-identified application matured into U.S. Patent No. 6,898,359. The instant request for reconsideration filed June 30, 2005 was timely filed within 2

months of the date the patent issued. See § 1.705(d). The Patent issued with a revised Patent Term Adjustment of 188 days. Patentees contend that there were no circumstances within this case history that constitute a failure by the Patentees to engage in reasonable efforts to conclude processing or examination of the above-identified application as set forth in 37 CFR § 1.704. In essence, Patentees' dispute the sole reduction of record, one for 103 days associated with the filing of a "miscellaneous incoming letter" received in the Office on February 11, 2005. Patentees state that the paper filed with the response to the notice of allowance was a power of attorney and thus, no reduction is warranted.

Patentees' contention is well taken. The OG Notice states that:

> … the Office is publishing this notice to provide guidance in interpreting the provisions of 37 CFR 1.704(c)(10) to clarify that submission of certain papers after a "Notice of Allowance," which do not cause substantial interference and delay in the patent issue process, are not considered a "failure to engage in reasonable efforts" to conclude processing or examination of an application. The following are examples of such papers: (1) Issue Fee Transmittal (PTOL-85B), (2) Power of Attorney, (3) Power to Inspect, (4) Change of Address, (5) Change of Status (small/not small entity status), (6) a response to the examiner's reasons for allowance, and (7) letters related to government interests (e.g., those between NASA and the Office). Therefore, the submission of these papers after a Notice of Allowance will not be considered a "failure to engage in reasonable efforts" to conclude processing or examination of an application and would not result in reduction of a patent term adjustment pursuant to 37 CFR 1.704(c)(10).

In view thereof, the patent term adjustment indicated on the patent should be two hundred ninety-one (291) days.

The Office acknowledges submission of the $200.00 fee set forth in 37 CFR 1.18(e). No additional fees are required.

The application file is being forwarded to the Certificates of Correction Branch for issuance of a certificate of correction in order to rectify this error. The Office will issue a certificate of correction indicating that the term of the above-

identified patent is extended or adjusted by TWO HUNDRED NINETY-ONE (291) days.

Telephone inquiries specific to this matter should be directed to the undersigned at (571) 272-3219.

Nancy Johnson
Senior Petitions Attorney
Office of Petitions

Enclosure: Copy of DRAFT Certificate of Correction

UNITED STATES PATENT AND TRADEMARK OFFICE

Commissioner for Patents
United States Patent and Trademark Office
P.O. Box 1450
Alexandria, VA 22313-1450
www.uspto.gov

NEUROPACE, INC.
1375 SHOREBIRD WAY
MOUNTAIN VIEW CA 94043

COPY MAILED

JUL 0 5 2006

OFFICE OF PETITIONS

In re Application of	:	
Pless et al.	:	
Application No. 10/121,933	:	ON PETITION
Filed: April 12, 2002	:	
Attorney Docket No. N15-01	:	

This is a decision on the petition under 37 C.F.R. § 1.137(b), filed May 16, 2006, to revive the above-identified application.

The petition is **GRANTED.**

The petition satisfies the conditions for revival pursuant to the provisions of 37 CFR 1.137(b) in that (1) the reply in the form of a continuing application; (2) the petition fee; and (3) the required statement of unintentional delay have been received. Accordingly, the response has been accepted as having been unintentionally delayed.

The above-identified application is being revived solely for purposes of continuity. As continuity has been established by this decision reviving the above-identified application, the above-identified application is again abandoned in favor of continuing application No. 11/436,191.

Telephone inquiries regarding this decision should be directed to the undersigned at (571) 272-3282. All other inquiries should be directed to the Technology Center.

Liana Chase
Petitions Examiner
Office of Petitions

10121937

SPE RESPONSE FOR CERTIFICATE OF CORRECTION

Paper No.: _____

DATE : 5-4-05

TO SPE OF : ART UNIT 1744

SUBJECT : Request for Certificate of Correction on Patent No.: 6813816

A response is requested with respect to the accompanying request for a certificate of correction.

Please complete this form and return with file, within **7** days to:
Certificates of Correction Branch - PK 3-915
Palm location **7580** - Tel. No. 305-8309

With respect to the change(s) requested, correcting Office and/or Applicant's errors, should the patent read as shown in the certificate of correction? No new matter should be introduced, nor should the scope or meaning of the claims be changed.

Check Drawings

Thank You For Your Assistance

Certificates of Correction Branch

The request for issuing the above-identified correction(s) is hereby:
Note your decision on the appropriate box.

- ☒ **Approved** — All changes apply.
- ☐ **Approved in Part** — Specify below which changes **do not** apply.
- ☐ **Denied** — State the reasons for denial below.

Comments:

_____

_____

_____

_____

_____

SPE _____ **Art Unit** _____

RICK D. NYDEGGER
BRENT P. LORIMER
THOMAS R. VUKSINICK
LARRY R. LAYCOCK
JONATHAN W. RICHARDS
DAVID R. WRIGHT
JOHN C. STRINGHAM
JOHN M. GUYNN
CHARLES L. ROBERTS
DANA L. TANGREN
ERIC L. MASCHOFF
CHARLES J. VEVERKA
ROBYN L. PHILLIPS
RICHARD C. GILMORE *
STERLING A. BRENNAN
R. BURNS ISRAELSEN
DAVID R. TODD
GREGORY M. TAYLOR
DAVID B. DELLENBACH
L. DAVID GRIFFIN
ADRIAN J. LEE
FRASER D. ROY
CARL T. REED

R. PARRISH FREEMAN, JR.
PETER F. MALEN, JR.
L. REX SEARS, PH.D.
WILLIAM R. RICHTER
ERIC M. KAMERATH
ROBERT E. AYCOCK
JENS C. JENKINS
KEVIN W. STINGER
WILLIAM J. ATHAY
MICHAEL B. DODD
RYAN D. BENSON
SARA D. JONES
TIGE KELLER
JANNA L. JENSEN
MATTHEW D. TODD
J. LAVAR OLDHAM
MICHAEL J. FRODSHAM
JOSEPH L. KRUPA
BRETT A. HANSEN
BRETT I. JOHNSON
MATTHEW A. BARLOW
WESLEY C. ROSANDER
ANDREW S. HANSEN
CHAD E. NYDEGGER
JOSEPH G. PIA
CLINTON E. DUKE
RYAN N. FARR *
JAMES B. BELSHE
ALISON B. MOHR
KIRK R. HARRIS
KEELY SCHNEITER
MICHAEL M. BALLARD
DAVID A. JONES
SHANE K. JENSEN
JONATHAN M. BENNS, PH.D.

VERNON R. RICE §
OF COUNSEL

OIPE JC179
APR 1 1 2005
PATENT & TRADEMARK OFFICE

WORKMAN | NYDEGGER

INTELLECTUAL PROPERTY ATTORNEYS

1000 EAGLE GATE TOWER
60 EAST SOUTH TEMPLE
SALT LAKE CITY, UTAH 84111
TELEPHONE: (801) 533-9800
FAX: (801) 328-1707
WEBSITE: HTTP://WWW.WNLAW.COM

C of C
EFW 8

PATENT
Docket No. 15567.1

IN THE UNITED STATES PATENT AND TRADEMARK OFFICE

In re application of

	Merlin D. Beynon	)
Serial No.:	10/121,937	) Art Unit) 1744
Filed:	April 12, 2002	)
For:	VACUUM NOZZLE ASSEMBLY AND SYSTEM	)
Examiner:	Terrence R. Till	)
Patent No.:	6,813,810 B2	)
Issue Date:	November 9, 2004	)

REQUEST FOR A CERTIFICATE OF CORRECTION UNDER 37 C.F.R. § 1.323

Attn: Certificate of Correction Branch
Commissioner for Patents
P.O. Box 1450
Alexandria, VA 22313-1450

Sir:

In accordance with the provisions of 37 C.F.R. § 1.323 which implement 35 U.S.C. § 255, the Commissioner is respectfully requested to issue a Certificate of Correction to correct mistakes in the above-identified patent. The enclosed Patent Office Form 1050 reflects the desired corrections. Also enclosed please find a check in the amount of $100.00 to cover the costs for issuance of this certificate.

04/12/2005 AADDF01 00000028 6813810
01 FC:1811 100.00 OP

* Admitted only in California
§ Admitted only in Virginia

The Commissioner is hereby authorized to charge payment of any fees associated with this communication or credit any overpayment to Deposit Account No. 23-3178. Duplicate copies of this letter are enclosed.

Dated this 8 day of APRIL, 2005.

Respectfully submitted,

Rick D. Nydegger
Attorney for Patentee
Registration No. 28,651
Customer No. 022913

RDN:jrb
Docket: 15567.1
PR0000000654V001

CERTIFICATE OF DEPOSIT UNDER 37 C.F.R. § 1.8

I hereby certify that this correspondence is being deposited with the United States Postal Service as first class mail, postage prepaid, in an envelope addressed to: Commissioner for Patents, P.O. Box 1450, Alexandria, VA 22313-1450, on this 8 day of APRIL, 2005.

Transmitted: REQUEST FOR A CERTIFICATE OF CORRECTION UNDER 37 C.F.R. § 1.323, PTO Form 1050 and Check No. 141531 for $100.00

(Also Form PTO-1050)

UNITED STATES PATENT AND TRADEMARK OFFICE

CERTIFICATE OF CORRECTION

PATENT NO : **6,813,810 B2**

DATED : **November 9, 2004**

INVENTOR(S) : **Merlin D. Beynon**

It is certified that error appears in the above-identified patent and that said Letters Patent is hereby corrected as shown below:

Cover Page,
Item (56), under "OTHER PUBLICATIONS", line 8, change "Equimpment," to –Equipment,–

Column 1,
Line 24, before "and remain within" change "within" to –into–
Line 60, before "high speed rotating shaft." insert –the–

Column 3,
Line 28, change "cross sectionally" to –cross-sectionally–

Column 4,
Line 36, before "enclosed space" insert –an–

Column 5,
Line 20, after "proximal end 50 of nozzle" insert –20–
Line 21, after "proximal end 50 of nozzle" insert –20–

Column 6,
Line 35, change "right hand rotation)" to –left hand rotation)–

Column 7,
Line 7, before "sonic pulsating air." remove [a]

Column 8,
Line 4, change "inspected" to –inspection–
Line 18, after "transfer station" insert –14–
Line 67, after "cleaning member" change "16A" to –10A–

MAILING ADDRESS OF SENDER: **Rick D. Nydegger, Esq.**
WORKMAN NYDEGGER
1000 Eagle Gate Tower
60 East South Temple
Salt Lake City, Utah 84111

PATENT NO. **6,813,810 B2**

No. of additional copies

→ **0**

(Also Form PTO-1050)

UNITED STATES PATENT AND TRADEMARK OFFICE

CERTIFICATE OF CORRECTION

PATENT NO : **6,813,810 B2**

DATED : **November 9, 2004**

INVENTOR(S) : **Merlin D. Beynon**

It is certified that error appears in the above-identified patent and that said Letters Patent is hereby corrected as shown below:

Column 10,
Line 7, change "screws 146,148" to --screws 144, 146--

Column 11,
Line 26, change "suction" to --suctioned--
Line 48, after "cleaning member" change "," to --;--

Column 12,
Line 58, change "plurality of bristle" to --plurality of bristles--

Column 13,
Line 33, after "transfer station" change "an" to --and--

Column 14,
Line 52, change "opposition" to --opposite--
Line 61, change "opposition" to --opposite--
Line 64, before "electrical motor" change "tho" to --the--

MAILING ADDRESS OF SENDER: **Rick D. Nydegger, Esq.**
WORKMAN NYDEGGER
1000 Eagle Gate Tower
60 East South Temple
Salt Lake City, Utah 84111

PATENT NO. **6,813,810 B2**

No. of additional copies

⟹ **0**

(Also Form PTO-1050)

UNITED STATES PATENT AND TRADEMARK OFFICE

CERTIFICATE OF CORRECTION

PATENT NO : **6,813,810 B2**

DATED : **November 9, 2004**

INVENTOR(S) : **Merlin D. Beynon**

It is certified that error appears in the above-identified patent and that said Letters Patent is hereby corrected as shown below:

Drawings,

Sheet 2, Figure 3, replace with the following drawing:

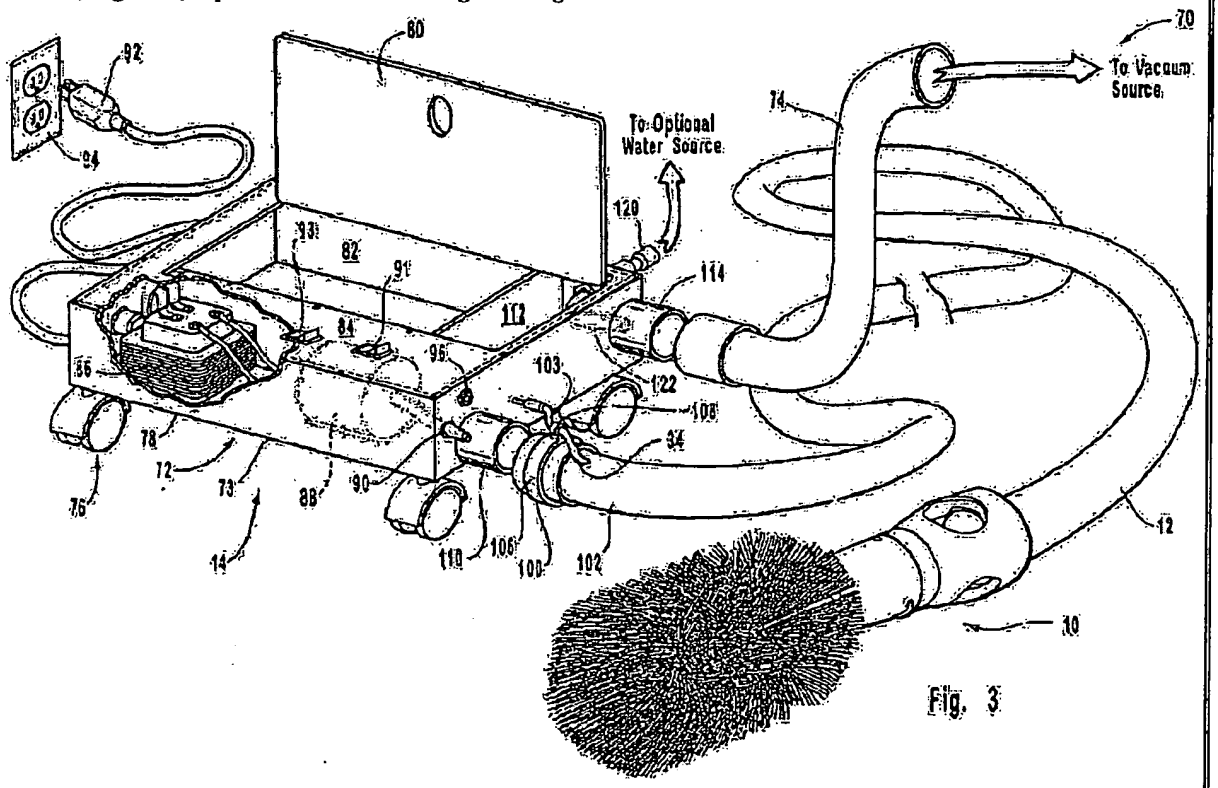

Fig. 3

MAILING ADDRESS OF SENDER: **Rick D. Nydegger, Esq.**
WORKMAN NYDEGGER
1000 Eagle Gate Tower
60 East South Temple
Salt Lake City, Utah 84111

PATENT NO. **6,813,810 B2**

No. of additional copies

→ **0**

P15/REV02

Approved for use through 04/30/2009. OMB 0651-0016
U.S. Patent and Trademark Office: U.S. DEPARTMENT OF COMMERCE
Under the Paperwork Reduction Act of 1995, no persons are required to respond to a collection of information unless it displays valid OMB control number.

PETITION TO ACCEPT UNINTENTIONALLY DELAYED PAYMENT OF MAINTENANCE FEE IN AN EXPIRED PATENT (37 CFR 1.378(c))

Patent Number	Issue Date (YYYY-MM-DD)	Application Number	Filing Date (YYYY-MM-DD)	Docket Number (if applicable)
6742918	2004-06-01	10121977	2002-04-12	P006440-LDA

CAUTION: Maintenance fee (and surcharge, if any) payment must correctly identify: (1) the patent number and (2) the application number of the actual U.S. application leading to issuance of that patent to ensure the fee(s) is/are associated with the correct patent. 37 CFR 1.366(c) and (d).

SMALL ENTITY
☐ Patentee claims, or has previously claimed, small entity status. See 37 CFR 1.27.

LOSS OF ENTITLEMENT TO SMALL ENTITY STATUS
☐ Patentee is no longer entitled to small entity status. See 37 CFR 1.27(g)

NOT Small Entity		Small Entity	
Fee	Code	Fee	Code
◉ 3 ½ year	(1551)	○ 3 ½ year	(2551)
○ 7 ½ year	(1552)	○ 7 ½ year	(2552)
○ 11 ½ year	(1553)	○ 11 ½ year	(2553)

SURCHARGE
The surcharge required by 37 CFR 1.20(i)(2) (Fee Code 1558) must be paid as a condition of accepting unintentionally delayed payment of the maintenance fee.

MAINTENANCE FEE (37 CFR 1.20(e)-(g))
The appropriate maintenance fee must be submitted with this petition.

STATEMENT
THE UNDERSIGNED CERTIFIES THAT THE DELAY IN PAYMENT OF THE MAINTENANCE FEE TO THIS PATENT WAS UNINTENTIONAL

PETITIONER(S) REQUEST THAT THE DELAYED PAYMENT OF THE MAINTENANCE FEE BE ACCEPTED AND THE PATENT REINSTATED

THIS PORTION MUST BE COMPLETED BY THE SIGNATORY OR SIGNATORIES

37 CFR 1.378(d) states: "Any petition under this section must be signed by an attorney or agent registered to practice before the Patent and Trademark Office, or by the patentee, the assignee, or other party in interest."

I certify, in accordance with 37 CFR 1.4(d)(4) that I am

◉ An attorney or agent registered to practice before the Patent and Trademark Office

○ A sole patentee

○ A joint patentee; I certify that I am authorized to sign this submission on behalf of all the other patentees.

○ A joint patentee; all of whom are signing this e-petition

○ The assignee of record of the entire interest

Patent Practitioner			
A signature of the applicant or representative is required in accordance with 37 CFR 1.33 and 10.18. Please see 37 CFR 1.4(d) for the form of the signature			
Signature	/Lionel D. Anderson/	Date (YYYY-MM-DD)	2008-08-07
Name	Lionel D. Anderson	Registration Number	50571

This collection of information is required by 37 CFR 1.378(c). The information is required to obtain or retain a benefit by the public which is to file (and by the USPTO to process) an application. Confidentiality is governed by 35 U.S.C. 122 and 37 CFR 1.11 and 1.14. This collection is estimated to take 1 hour to complete, including gathering, preparing, and submitting the completed application form to the USPTO. Time will vary depending upon the individual case. Any comments on the amount of time you require to complete this form and/ or suggestions for reducing this burden, should be sent to the Chief Information Officer, U.S. Patent and Trademark Office, U.S. Department of Commerce, P.O. Box 1450, Alexandria, VA 22313-1450. DO NOT SEND FEES OR COMPLETED FORMS TO THIS ADDRESS. **This form can only be used when in conjunction with EFS-Web. If this form is mailed to the USPTO, it may cause delays in reinstating the patent.**

Privacy Act Statement

The Privacy Act of 1974 (P.L. 93-579) requires that you be given certain information in connection with your submission of the attached form related to a patent application or patent. Accordingly, pursuant to the requirements of the Act, please be advised that: (1) the general authority for the collection of this information is 35 U.S.C. 2(b)(2); (2) furnishing of the information solicited is voluntary; and (3) the principal purpose for which the information is used by the U.S. Patent and Trademark Office is to process and/or examine your submission related to a patent application or patent. If you do not furnish the requested information, the U.S. Patent and Trademark Office may not be able to process and/or examine your submission, which may result in termination of proceedings or abandonment of the application or expiration of the patent.

The information provided by you in this form will be subject to the following routine uses:

1. The information on this form will be treated confidentially to the extent allowed under the Freedom of Information Act (5 U.S.C. 552) and the Privacy Act (5 U.S.C. 552a). Records from this system of records may be disclosed to the Department of Justice to determine whether the Freedom of Information Act requires disclosure of these record s.

2. A record from this system of records may be disclosed, as a routine use, in the course of presenting evidence to a court, magistrate, or administrative tribunal, including disclosures to opposing counsel in the course of settlement negotiations.

3. A record in this system of records may be disclosed, as a routine use, to a Member of Congress submitting a request involving an individual, to whom the record pertains, when the individual has requested assistance from the Member with respect to the subject matter of the record.

4. A record in this system of records may be disclosed, as a routine use, to a contractor of the Agency having need for the information in order to perform a contract. Recipients of information shall be required to comply with the requirements of the Privacy Act of 1974, as amended, pursuant to 5 U.S.C. 552a(m).

5. A record related to an International Application filed under the Patent Cooperation Treaty in this system of records may be disclosed, as a routine use, to the International Bureau of the World Intellectual Property Organization, pursuant to the Patent Cooperation Treaty.

6. A record in this system of records may be disclosed, as a routine use, to another federal agency for purposes of National Security review (35 U.S.C. 181) and for review pursuant to the Atomic Energy Act (42 U.S.C. 218(c)).

7. A record from this system of records may be disclosed, as a routine use, to the Administrator, General Services, or his/her designee, during an inspection of records conducted by GSA as part of that agency's responsibility to recommend improvements in records management practices and programs, under authority of 44 U.S.C. 2904 and 2906. Such disclosure shall be made in accordance with the GSA regulations governing inspection of records for this purpose, and any other relevant (i.e., GSA or Commerce) directive. Such disclosure shall not be used to make determinations about individuals.

8. A record from this system of records may be disclosed, as a routine use, to the public after either publication of the application pursuant to 35 U.S.C. 122(b) or issuance of a patent pursuant to 35 U.S.C. 151. Further, a record may be disclosed, subject to the limitations of 37 CFR 1.14, as a routine use, to the public if the record was filed in an application which became abandoned or in which the proceedings were terminated and which application is referenced by either a published application, an application open to public inspections or an issued patent.

9. A record from this system of records may be disclosed, as a routine use, to a Federal, State, or local law enforcement agency, if the USPTO becomes aware of a violation or potential violation of law or regulation.

UNITED STATES PATENT AND TRADEMARK OFFICE

Commissioner for Patents
United States Patent and Trademark Office
P.O. Box 1450
Alexandria, VA 22313-1450
www.uspto.gov

In re Patent No. 6742918
Issue Date: June 1,2004
Application No. 10121977
Filed: April 12,2002
Attorney Docket No. P00519-US-0 (15859.0053)

:

:DECISION GRANTING PETITION
:UNDER 37 CFR 1.378(c)

:

This is a decision on the electronic petition, filed August 7,2008 ,under 37 CFR 1.378(c) to accept the unintentionally delayed payment of the 3.5 year maintenance fee for the above-identified patent.

The petition is GRANTED.

The maintenance fee is accepted, and the above-identified patent reinstated as of August 7,2008 . This decision also constitutes notice that the fee has been accepted. An electronic copy of the petition and this decision has been created as an entry in an Image File Wrapper. Nevertheless, petitioner should print and retain an independent copy

Telephone inquires related to this electronic decision should be directed to the Electronic Business Center at 1-866-217-9197.

SPE RESPONSE FOR CERTIFICATE OF CORRECTION

Paper No.: _____

DATE : 3/9/2004

TO SPE OF : ART UNIT **1700**

SUBJECT : Request for Certificate of Correction on Patent No.: **6,814,567**

A response is requested with respect to the accompanying request for a certificate of correction.

Please complete this form and return with file, within **7** days to:
Certificates of Correction Branch - PK 3-922
Palm location **7580** - Tel. No. 305-8309

With respect to the change(s) requested, correcting Office and/or Applicant's errors, should the patent read as shown in the certificate of correction? No new matter should be introduced, nor should the scope or meaning of the claims be changed.

REQ FOR FORMAL DRWGS

Thank You For Your Assistance

Ernest C. White, LIE305-8339
Certificates of Correction Branch

The request for issuing the above-identified correction(s) is hereby:
Note your decision on the appropriate box.

- ☒ **Approved** — **All** changes apply.
- ☐ **Approved in Part** — Specify below which changes **do not** apply.
- ☐ **Denied** — State the reasons for denial below.

Comments:

Formal drawings 1-9 have been approved.
Tim Heitkamp
Tim Heitkamp
Primary Examiner

SPE

1722
Art Unit

PTOL-306 (REV. 7/03)

U.S. DEPARTMENT OF COMMERCE Patent and Trademark Office

UNITED STATES PATENT AND TRADEMARK OFFICE

COMMISSIONER FOR PATENTS
UNITED STATES PATENT AND TRADEMARK OFFICE
P.O. BOX 1450
ALEXANDRIA, VA 22313-1450
WWW.USPTO.GOV

Paper No. 5

DAVID A. MIMS JR.
INTERNATIONAL BUSINESS MACHINES CORPORATION
INTELLECTUAL PROPERTY LAW DEPARTMENT
11400 BURNET ROAD
AUSTIN, TX 78758

COPY MAILED

SEP 2 3 2003

OFFICE OF PETITIONS

In re Application of	:	
Alexander Druyan et al	:	
Application No. 10/122,022	:	ON PETITION
Filed: April 11, 2002	:	
Attorney Docket No. AUS920011015US1	:	

This is a decision on the petition under 37 CFR 1.137(b), filed September 10, 2003, to revive the above-identified application.

The petition is **GRANTED**.

The above-identified application became abandoned for failure to reply in a timely manner to the Notice to File Missing Parts of Nonprovisional Application (Notice) mailed May 17, 2002. The Notice set a period for reply of two (2) months from the mail date of the Notice. No extensions of time under the provisions of 37 CFR 1.136(a) were obtained. Accordingly, the above-identified application became abandoned on July 18, 2002.

Telephone inquiries concerning this decision should be directed to Wan Laymon at (703) 305-9282.

The application file is being forwarded to the Office of Initial Patent Examination.

Wan Laymon
Petitions Examiner
Office of Petitions
Office of the Deputy Commissioner
for Patent Examination Policy

UNITED STATES PATENT AND TRADEMARK OFFICE

COMMISSIONER FOR PATENTS
UNITED STATES PATENT AND TRADEMARK OFFICE
P.O. BOX 1450
ALEXANDRIA, VA 22313-1450
www.uspto.gov

Paper No. 7

MARILYN SMITH DAWKINS
INTERNATIONAL BUSINESS MACHINES CORPORATION
INTELLECTUAL PROPERTY LAW DEPARTMENT
11400 BURNET ROAD
AUSTIN, TX 78758

COPY MAILED

FEB 25 2004

OFFICE OF PETITIONS

In re Application of	:	
David Michael Bender et al	:	
Application No. 10/122,033	:	ON PETITION
Filed: April 11, 2002	:	
Attorney Docket No. AUS920020044US1	:	

This is a decision on the petition under 37 CFR 1.137(b), filed February 12, 2004, to revive the above-identified application.

The petition is **GRANTED**.

The above-identified application became abandoned for failure to reply in a timely manner to the Notice to File Corrected Application Papers (Notice) mailed May 17, 2002. The Notice set a period for reply of two (2) months from the mail date of the Notice. No extensions of time under the provisions of 37 CFR 1.136(a) were obtained. Accordingly, the above-identified application became abandoned on July 18, 2003.

Telephone inquiries concerning this decision should be directed to Wan Laymon at (703) 305-9282.

The application file is being forwarded to the Office of Initial Patent Examination.

Wan Laymon

Wan Laymon
Petitions Examiner
Office of Petitions
Office of the Deputy Commissioner
for Patent Examination Policy

UNITED STATES PATENT AND TRADEMARK OFFICE

Commissioner for Patents
United States Patent and Trademark Office
P.O. Box 1450
Alexandria, VA 22313-1450
www.uspto.gov

COPY MAILED
SEP 0 5 2006
OFFICE OF PETITIONS

EITAN, PEARL, LATZER & COHEN ZEDEK LLP
10 ROCKEFELLER PLAZA, SUITE 1001
NEW YORK, NY 10020

In re Application of	:	
Leon Blalik	:	
Application No.: 10/122,076	:	ON PETITION
Filed: April 15, 2002	:	
Attorney Docket No: P-1181-US1	:	

This is a decision on the petition under 37 CFR §1.137(b), July 25, 2006, to revive the above-identified application.

Any request for reconsideration of this decision must be submitted within TWO (2) MONTHS from the mail date of this decision. Extensions of time under 37 CFR 1.136(a) are permitted. The reconsideration request should include a cover letter entitled "Renewed Petition" under 37 CFR 1.137(b)."

This application became abandoned for failure to respond in a timely manner to the non-final Office action mailed October 18, 2004. The notice set a shortened statutory period for reply of three months from its mailing date. No response was received within the allowable period, and the application became abandoned on January 19, 2005.

Effective December 1, 1997, the provisions of 37 CFR 1.137(b) now provide that where the delay in reply was unintentional, a petition may be filed to revive an abandoned application or a lapsed patent pursuant to 37 CFR 1.137(b). A grantable petition pursuant to 37 CFR 1.137(b) must be accompanied by:

(1) the required reply, unless previously filed. In a non-provisional application abandoned for failure to prosecute, the required reply may be met by the filing of a continuing application. In an application or patent, abandoned or lapsed for failure to pay the issue fee, or any portion thereof, the required reply must be the payment of the issue fee or any outstanding balance thereof.

(2) the petition fee as set forth in 37 CFR 1.17(m);

(3) a statement that the entire delay in filing the required reply from the due date for the reply until the filing of a grantable petition pursuant to 37 CFR 1.137(b) was unintentional. The Commissioner may require additional information where there is a question whether the delay was unintentional; and

(4) any terminal disclaimer (and fee set forth in 37 CFR 1.20(d)) required pursuant to 37 CFR 1.137(c).

The instant petition does not satisfy the requirements of item (2) above.

The fee for the instant petition is $1500.00, however; the fee was not found with the instant petition. The undersigned did not find an authorization to charge a deposit account for the petition fee either. The petition must be dismissed, accordingly. The petition fee, or an authorization to charge a deposit account for the same, must accompany the renewed petition.

Further correspondence with respect to this matter should be addressed as follows:

By mail: Commissioner for Patents
United States Patent and Trademark Office
Box 1450
Alexandria, VA 22313-1450

By facsimile: (571) 273-8300
Attn: Office of Petitions

Telephone inquiries concerning this matter may be directed to the undersigned at (571) 272-3222.

Kenya A. McLaughlin

Kenya A. McLaughlin
Petitions Attorney
Office of Petitions

UNITED STATES PATENT AND TRADEMARK OFFICE

Commissioner for Patents
United States Patent and Trademark Office
P.O. Box 1450
Alexandria, VA 22313-1450
www.uspto.gov

EITAN, PEARL, LATZER & COHEN ZEDEK LLP
10 ROCKEFELLER PLAZA, SUITE 1001
NEW YORK, NY 10020

COPY MAILED
DEC 0 5 2006
OFFICE OF PETITIONS

In re Application of

Leon Blalik :

Application No. 10/122,076

: DECISION ON PETITION

Filed: April 15, 2002

:

Attorney Docket No. P-1181-US1

This is a decision on the renewed petition under 37 CFR 1.137(b), filed, November 6, 2006, to revive the above-identified application.

The petition is **GRANTED**.

The above-cited application became abandoned for failure to reply in a timely manner to the non-final Office action mailed October 18, 2004, which set a shortened statutory period for reply of three (3) months from its mailing date. No extension of time pursuant to 37 CFR 1.136(a) was obtained within the allowable period. Accordingly, the application became abandoned on January 19, 2005. A petition under 37 CFR 1.137(b) was first filed July 25, 2006, and dismissed by a decision mailed September 5, 2006.

The amendment filed July 25, 2006, is noted.

The application is being forwarded to Technology Center 2600, GAU 2616 for further processing.

Telephone inquiries concerning this decision should be directed to the undersigned at (571) 272-3222.

Kenya A. McLaughlin
Petitions Attorney
Office of Petitions

UNITED STATES PATENT AND TRADEMARK OFFICE

Commissioner for Patents
United States Patent and Trademark Office
P.O. Box 1450
Alexandria, VA 22313-1450
www.uspto.gov

Paper No. 9

Kilpatrick Stockton, LLP
1001 West Fourth Street
Winston-Salem, NC 27101

COPY MAILED

JUL 2 3 2004

OFFICE OF PETITIONS

In re Application of :
Adam C. Braun, et. al. :
Application No. 10/122,089 : ON PETITION
Filed: April 12, 2002 :
Attorney Docket No. IMM100A :

This is a decision on the petition under 37 CFR 1.137(b), filed July 6, 2004, to revive the above-identified application.

The above-identified application became abandoned for failure to reply in a timely manner to the Notice to File Corrected Application Papers (Notice) mailed July 12, 2002. The Notice set a period for reply of two (2) months from the mail date of the Notice. No extensions of time under the provisions of 37 CFR 1.136(a) were obtained. Accordingly, the above-identified application became abandoned after midnight September 12, 2002.

In response, petitioner submitted with the instant petition $1,330 for the petition to revive fee and five (5) sheets of drawings containing Figures 1-5.

The petition is **GRANTED**.

The application file is being forwarded to the Office of Initial Patent Examination for further processing.

Telephone inquiries concerning this decision should be directed to the undersigned at (703) 308-6711.

Andrea Smith
Petitions Examiner
Office of Petitions
Office of the Deputy Commissioner
for Patent Examination Policy

UNITED STATES PATENT AND TRADEMARK OFFICE

COMMISSIONER FOR PATENTS
UNITED STATES PATENT AND TRADEMARK OFFICE
P.O. BOX 1450
ALEXANDRIA, VA 22313-1450
www.uspto.gov

PATENT DEPARTMENT (51851)
KILPATRICK STOCKTON LLP
1001 WEST FOURTH STREET
WINSTON-SALEM, NC 27101

MAILED
JUN 22 2006
Technology Center 2100

In re Application of: Peurach, et al.
Application No. 10/122,090
Attorney Docket No. IMM075B
Filed: April 12, 2002
For: HAPTIC AUTHORING

SUA SPONTE
WITHDRAWAL OF HOLDING OF ABANDONMENT

The petition under 37 CFR 1.181 for withdrawal of the holding of abandonment, filed August 18, 2005, is acknowledged.

A review of the application reveals that a Notice of Abandonment was mailed to the applicant on August 19, 2005. The notice incorrectly indicated that the instant application was being held abandoned for failure to respond to the Office communication mailed on September 3, 2004. However, a Notice of Non-Compliant Amendment letter was mailed to Applicant on January 10, 2005. In addition, the interview summary, which occurred on June 10, 2005, indicates that the Notice of Non-Compliant letter of January 10, 2005 was mailed *in error* and consequently, the notice was indicated to have been vacated. The interview summary further indicates that an Office action based on the timely filed amendment of November 5, 2004 will be forthcoming.

In view of these facts, the abandonment of the application was clearly in error and is hereby **VACATED**. The Office regrets any inconvenience this may have caused.

The application is being forwarded to the Supervisory Legal Instruments Examiner with instructions to **WITHDRAW** the holding of abandonment, restore the instant application to pending status and to **PROCESS** the amendment filed November 5, 2004. It is noted that within the amendment of November 5, 2004, the indication of "Claims 24-42 (Cancelled)" should read --Claims 1-42 (Cancelled)-- for accuracy. The application will then be forwarded to the Examiner of record for prompt action on the merits.

Inquiries to this decision may be directed to Special Programs Examiner Brian Johnson at (571) 272-3595.

Brian L. Johnson
Special Program Examiner
Technology Center 2100
Computer Architecture, Software, and Information Security

UNITED STATES PATENT AND TRADEMARK OFFICE

COMMISSIONER FOR PATENTS
UNITED STATES PATENT AND TRADEMARK OFFICE
WASHINGTON, D.C. 20231
www.uspto.gov

MAILED

DEC 2 0 2002

Technology Center 2100

Paper No. 4

Scott W. Hewett
400 West Third Street #223
Santa Rosa, CA 95401

In re Application of:	)	
Pradiptya Ghosh, et al.	)	
Application No. 10/122,101	)	
Filed: April 11, 2002	)	DECISION ON REQUEST FOR
For: METHOD OF STORING CROSS-	)	WITHDRAWAL AS ATTORNEY
HIERARCHY COUPLING DATA IN	)	
A HIERARCHICAL CIRCUIT	)	
MODEL	)	

This is a decision on the Request To Withdraw from Representation filed November 19, 2002.

A grantable request to withdraw as attorney of record should indicate thereon the present mailing addresses of the attorney(s) who is/are withdrawing from the record and of the applicant. **The request for withdrawal must be signed by every attorney seeking to withdraw or contain a clear indication that one attorney is signing on behalf of another/others.** A request to withdraw will not be approved unless at least 30 (thirty) days would remain between the date of approval and the later of the expiration date of a time to file a response or the expiration date of the maximum time period which can be extended under 37 C.F.R. § 1. 136(a). The effective date of withdrawal being the date of decision and not the date of request. See M.P.E.P. § 402.06. **37 C.F.R. § 1.36 further requires that the applicant or patent owner be notified of the withdrawal of the attorney or agent.**

The request is signed by Scott W. Hewett alone and does not contain a clear indication that Mr. Hewett is authorized to sign on behalf of the other attorneys of record and is signing on behalf of the other attorneys of record. Furthermore, there is no indication that Applicant has been notified of the request for withdrawal. Accordingly, the request is **DENIED**.

All future communications from the United States Patent and Trademark Office (Office) will continue to be directed to the above-listed address until otherwise notified by applicant. Applicant is reminded of the obligation to promptly notify the Office of any change in correspondence address to ensure receipt of all communications from the Office.

FOR Vincent N. Trans
Special Programs Examiner
Technology Center 2100
Computer Architecture and Software
(703) 305-9750

UNITED STATES PATENT AND TRADEMARK OFFICE

Commissioner for Patents
United States Patent and Trademark Office
P.O. Box 1450
Alexandria, VA 22313-1450
www.uspto.gov

BLAKE, CASSELLS & GRAYDON LLP
BOX 25, COMMERCE COURT WEST
199 BAY STREET, SUITE 2800
TORONTO ON M5L 1A9 CA CANADA

COPY MAILED

OCT 0 8 2008

OFFICE OF PETITIONS

In re Application of	:	
George Kadlicko	:	
Application No. 10/122,140	:	NOTICE
Filed: April 15, 2002	:	
Attorney Docket No. 00011-0090	:	

This is a notice regarding your request for acceptance of a fee deficiency submission under 37 CFR 1.28.

The Office no longer investigates or rejects original or reissue patent under 37 CFR 1.56. **1098 Off. Gaz. Pat. Office 502 (January 3, 1989)**. Therefore, nothing in this Notice is intended to imply that an investigation was done.

Your fee deficiency submission under 37 CFR 1.28 is hereby **ACCEPTED**.

This patent is no longer entitled to small entity status. Accordingly, all future fees paid in this patent must be paid at the large entity rate.

Inquiries related to this communication should be directed to the undersigned at (571) 272-3208.

Karen Creasy

Karen Creasy
Petitions Examiner
Office of Petitions

UNITED STATES PATENT AND TRADEMARK OFFICE

COMMISSIONER FOR PATENTS
UNITED STATES PATENT AND TRADEMARK OFFICE
P.O. BOX 1450
ALEXANDRIA, VA 22313-1450
www.uspto.gov

VISTA IP LAW GROUP LLP
12930 Saratoga Avenue
Suite D-2
Saratoga CA 95070

MAILED

JUL 06 2010

OFFICE OF PETITIONS

In re Application
Pressman, et al.
Application No. 10/122,151
Filed: April 14, 2002
Dkt. No.: 40.102011 US

: PATENT TERM ADJUSTMENT

This is in response to the "REQUEST FOR RECALCULATION OF PATENT TERM ADJUSTMENT UNDER 37 C.F.R. § 1.705(b)," filed March 3, 2010.

Applicant submits that the correct patent term adjustment to be indicated on the patent is, at minimum, 293 days, not zero days as calculated by the Office as of the mailing of the initial determination of patent term adjustment. Applicant requests this correction on the basis that the Office will take in excess of three years to issue this patent.

Insofar as the instant application for patent term adjustment requests reconsideration of the patent term adjustment as it relates to the Office's failure to issue the patent within 3 years of the filing date, the application for patent term adjustment under 37 CFR 1.705(b) is DISMISSED as PREMATURE.

Knowledge of the actual date the patent issues is required to calculate the amount, if any, of additional patent term patentee is entitled to for Office failure to issue the patent within 3 years. See, § 1.702(b). (This is true even where a request for continued examination (RCE) was filed). The computer will not undertake the § 1.702(b) calculation until the actual date of issuance of the patent has been determined. Likewise, the computer will not calculate any further Office delay under § 1.702(a)(4) or applicant delay under § 1.704(c)(10) until the actual date of issuance of the patent has been determined. As such, the Office can not make a determination on the correctness of the patent term adjustment until the patent has issued.

Requesting reconsideration of the patent term adjustment to be indicated on the patent based on the initial determination of patent term adjustment and a projected issuance date of the patent (or even the filing date of the request for continued examination) is premature. Accordingly, it is appropriate to dismiss as premature such a request.

Applicant is advised that they may wait until the time of the issuance of the patent and file a request for reconsideration of the patent term adjustment pursuant to 37 CFR 1.705(d). As the USPTO does not calculate the amount of time earned pursuant to 37 CFR 1.702(b) until the time

of the issuance of the patent, the Office will consider any request for reconsideration of the patent term adjustment due to an error in the calculation of 37 CFR 1.702(b) to be timely if the request for reconsideration is filed within two months of the issuance of the patent. However, as to all other bases for contesting the initial determination of patent term adjustment received with the notice of allowance, applicant must timely file an application for patent term adjustment prior to the payment of the issue fee[1].

Receipt is hereby acknowledged of the required patent term adjustment application fee under 37 CFR 1.705(b) of $200.00. See, 37 CFR 1.18(e).

However, any request for reconsideration of the patent term adjustment indicated on the patent must be timely filed within 2 months after issuance pursuant to 37 CFR 1.705(d) and **must** include payment of the required fee under 37 CFR 1.18(e).

The application file is being forwarded to the Office of Data Management for issuance of the patent. The patent term adjustment indicated on the patent (as shown on the Issue Notification mailed about three weeks prior to patent issuance) will include any additional adjustment accrued both for Office delay in issuing the patent more than four months after payment of the issue fee and satisfaction of all outstanding requirements, and for the Office taking in excess of three years to issue the patent (to the extent that the three-year period does not overlap with periods already accorded).

Telephone inquiries specific to this decision should be directed to the undersigned at (571) 272-3205.

/ALESIA M. BROWN/

Alesia M. Brown
Petitions Attorney
Office of Petitions

---

[1] For example, if applicant disputes both the calculation of patent term adjustment under 37 CFR 1.702(a)(1) for Office failure to mail a first Office action or notice of allowance not later than fourteen months after the date on which the application was filed and under 37 CFR 1.702(b) for Office failure to issue a patent within three years of the actual filing date of the application, then applicant must still timely file an application for patent term adjustment prior to the payment of the issue fee to contest the calculation of Office delay in issuing a first Office action or notice of allowance. See 37 CFR 1.705(b) and 35 U.S.C. 154(b)(3)(B). A dispute as to the calculation of the §1.702(a)(1) period raised on request for reconsideration of patent term adjustment under 37 CFR 1.705(d) will be dismissed as untimely filed.

UNITED STATES PATENT AND TRADEMARK OFFICE

Commissioner for Patents
United States Patent and Trademark Office
P.O. Box 1450
Alexandria, VA 22313-1450
www.uspto.gov

KUDIRKA & JOBSE, LLP
ONE STATE STREET, SUITE 800
BOSTON, MA 02109

COPY MAILED

AUG 23 2007

OFFICE OF PETITIONS

In re Application of	:	
Volker Dotsch et al	:	
Application No. 10/122,153	:	ON PETITION
Filed: April 12, 2002	:	
Attorney Docket No. B0002/7052	:	

This is a decision on the petition, filed March 20, 2006, which is being treated as a request under 37 CFR 3.81(b)[1] to add an assignee's name on the Fee(s) Transmittal form PTOL-85(b) so that the Letters Patent will issue to the assignees.

The request is **DISMISSED**.

Petitioner states that the correct assignees' names are Bruker BioSpin Corp. and The Regents of the University of California and that Bruker BioSpin Corp. was included on the Part B - Fee(s) Transmittal form at the time of payment of the issue fee. Accordingly, petitioner requests that the patent issue to Bruker BioSpin Corp. and The Regents of the University of California.

37 CFR 3.81(b), effective June 25, 2004, reads:

> *After payment of the issue fee:* Any request for issuance of an application in the name of the assignee submitted after the date of payment of the issue fee, and any request for a patent to be corrected to state the name of the assignee, must state that the assignment was submitted for recordation as set forth in § 3.11 before issuance of the patent, and must include a request for a certificate of correction under § 1.323 of this chapter (accompanied by the fee set forth in § 1.20(a)) and the processing fee set forth in § 1.17(i) of this chapter.

The request under 37 CFR 3.81(b) was not accompanied by a request for a certificate of correction (and fee) as required by 3.81(b). *See also* MPEP 1481.01. As petitioner has failed to comply with the provisions of 37 CFR 3.81(b), the request cannot be granted at this time.

---

[1] *See* MPEP 1309, subsection II and Official Gazette of June 22, 2004

A review of Office database assignment records reflects that an assignment to Bruker BioSpin Corp. and The Regents of the University of California has been recorded. Therefore, upon submission of the required certificate of correction and fee, it would be appropriate for the Office to issue a certificate of correction to correct the front page of the Letters Patent to reflect that Bruker BioSpin Corp. and The Regents of the University of California were the assignees of record at the time of issuance of the application into a patent. *Note also* 35 U.S.C. § 152.

In view of the above and **after issuance of this application into a patent, the Certificates of Correction Branch is instructed to issue a certificate of correction <u>upon submission by petitioner of a request for a certificate of correction (and fee) which sets forth Bruker BioSpin Corp. and The Regents of the University of California, as the assignees</u>**. *No certificate of correction will be issued which sets forth an assignee other than the assignee set forth in this request. A copy of this decision **<u>must</u>** accompany the request for a Certificate of Correction.*

No further renewed request under 37 CFR 3.81(b) is necessary for consideration by the Office of Petitions for issuance of a certificate of correction in the name of the assignees set forth in this request, since this decision operates as an instruction to the Certificates of Correction Branch to issue the requested certificate of correction.

Alternatively, if petitioner desires to have the correct assignees data appear on the front page of the Letters Patent, petitioner may wish to consider filing a petition to withdraw the subject application from issue under 37 CFR 1.313(c)(2). The petition to withdraw from issue under 37 CFR 1.313(c)(2) must be accompanied by a request for continued examination (RCE) and submission (which may be a request under 37 CFR 3.81(b)).

Inquiries concerning this decision should be directed to Irvin Dingle at (571) 272-3210. Any questions concerning issuance of a certificate of correction should be directed to the Certificates of Correction Branch at (571) 272-4200.

Irvin Dingle
Petition Examiner
Office of Petitions

UNITED STATES PATENT AND TRADEMARK OFFICE

Commissioner for Patents
United States Patent and Trademark Office
P.O. Box 1450
Alexandria, VA 22313-1450
www.uspto.gov

LAW OFFICE OF PAUL E. KUDIRKA
40 BROAD STREET, SUITE 300
BOSTON, MA 02109

COPY MAILED

MAY 30 2008

OFFICE OF PETITIONS

In re Patent No. 6,958,244	:	
Issue Date: October 25, 2005	:	
Application No. 10/122,153	:	ON PETITION
Filed: April 12, 2002	:	
Attorney Docket No. B0002/7052	:	

CORRECTED DECISION

This is a decision on the petition filed March 20, 2006, which is being treated as a petition under 37 CFR 3.81(b)[1] to add the assignee's name on the front page of the above-identified patent by way of a Certificate of Correction.

The petition is **granted.**

Telephone inquiries concerning this matter may be directed to the undersigned at (571) 272-3210. Any questions concerning the issuance of the Certificate of Correction should be directed to the Certificates of Correction Branch at (703) 305-8309.

The decision mailed August 23, 2007 is hereby vacated as of the mail date of this decision.

This application is being forwarded to the Certificates of Correction Branch for issuance of the requested Certificate of Correction.

Irvin Dingle
Petitions Examiner
Office of Petitions

[1] See Official Gazette of June 22, 2004

UNITED STATES PATENT AND TRADEMARK OFFICE

Commissioner for Patents
United States Patent and Trademark Office
P.O. Box 1450
Alexandria, VA 22313-1450
www.uspto.gov

LOWE HAUPTMAN HAM & BERNER, LLP
1700 DIAGONAL ROAD
SUITE 300
ALEXANDRIA, VA 22314

COPY MAILED
JAN 29 2010

In re Application of	:	
Cho et al.	:	
Application No. 10/122,216	:	DECISION ON PETITION
Filed: April 16, 2002	:	
Attorney Docket No. 123054-05005239	:	

This is a decision on the petition, filed September 23, 2009, which is being treated as a petition under 37 CFR 1.181 (no fee) requesting withdrawal of the holding of abandonment in the above-identified application.

The petition is **GRANTED**.

This application was held abandoned for failure to reply to the non-final Office action mailed July 31, 2007, which set a one (1) month shortened statutory period for reply. A Notice of Abandonment was mailed on May 8, 2009.

Petitioner asserts that the Office action dated July 31, 2007 was not received.

There is a strong presumption that the Office action was properly mailed to the practitioner at the address of record. This presumption may be overcome by a showing that the Office action was not in fact received. In this regard, the showing required to establish the failure to receive the Office action must consist of the following:

1. a statement from practitioner stating that the Office action was not received by the practitioner;

2. a statement from the practitioner attesting to the fact that a search of the file jacket and docket records indicates that the Office action was not received; and

3. a copy of the docket record where the nonreceived Office action would have been entered had it been received and docketed must be attached to and referenced in the practitioner's statement.

See MPEP § 711.03(c) under subheading "Petition to Withdraw Holding of Abandonment Based on Failure to Receive Office Action," and "Withdrawing the Holding of Abandonment When Office Actions Are Not Received," 1156 Official Gazette 53 (November 16, 1993).

The petition satisfies the above-stated requirements. Accordingly, the application was not abandoned in fact.

In view of the above, the Notice of Abandonment is hereby vacated and the holding of abandonment withdrawn.

This application is being referred to the Technology Center technical support staff of Art Unit 2613 for remailing the Office action of July 31, 2007. The period for reply will run from the mailing date of the Office action.

Chris Bottorff
Petitions Examiner
Office of Petitions

UNITED STATES PATENT and TRADEMARK OFFICE
UNDER SECRETARY OF COMMERCE FOR INTELLECTUAL PROPERTY AND
DIRECTOR OF THE UNITED STATES PATENT AND TRADEMARK OFFICE
WASHINGTON, D.C. 20231
WWW.USPTO.GOV

rvk

Mailed: JUL 18 2003 Paper No. 8

In re application of:
Alexandre M.Mayolet et al
Serial No.: 10/122,266
Filed: April 11, 2002
For: FLUORIDE CRYSTALLINE OPTICAL LITHOGRAPHY LENS ELEMENT BLANK

DECISION ON PETITION

This is a response to the PETITION TO REVIVE UNINTENTIONALLY ABANDONED APPLICATION & REQUEST FOR WAIVER OF PETITION FEES, filed June 4, 2003. The petition requests that the abandonment, as set forth in the Notice of Abandonment of April 22, 2003, for failure to timely file a proper response to the Office letter dated September 9, 2002 be withdrawn. The petitioner asserts that the response was properly and timely replied on September 24, 2002 to the Office letter dated September 9, 2002.

DECISION

Since the petition asserts that the Office Action was timely replied to, the request is accepted as a petition under 37 C.F.R. 1.181 (no fee). A review of the petitioner's evidence provided with the instant petition indicates that the request has merit. The evidence is sufficient to establish that applicants did in fact reply to the Office letter in a timely fashion. The submitted evidence is the properly completed Certificate of Mailing dated September 18, 2002 on a copy of the response to the Office letter, and a copy of the USPTO date stamp return postcard dated September 24, 2002.

Therefore, the Notice of Abandonment is hereby withdrawn, and the case is returned to pending status. The case will be forwarded to the Technical Support Staff for

enetering of the Response and then forwarded to the examiner for prompt consideration.

The Petition is **GRANTED.**

JMStone

Jacqueline Stone, Director
Technology Center 1700
Chemical and Materials Engineering

CORNING INCORPORATED
SP-TI-3-1
CORNING, NY 14831

UNITED STATES PATENT AND TRADEMARK OFFICE

COMMISSIONER FOR PATENTS
UNITED STATES PATENT AND TRADEMARK OFFICE
P.O. BOX 1450
ALEXANDRIA, VA 22313-1450
www.uspto.gov

MAIL

MAY 18 2004

DIRECTOR OFFICE
TECHNOLOGY CENTER 2100

Paper No. 11

Ben Yorks
Irell & Manella, LLP
840 Newport Center Drive
Suite 400
Newport Beach, CA 92660-6324

In re Application of:
Richard Zodnik
Application No. 10/122,274
Filed: April 11, 2002
For: LOCATOR FOR PHYSICALLY LOCATING A PERIPHERAL DEVICE IN A COMMUNICTION NETWORK

DECISION ON PETITION TO MAKE SPECIAL UNDER 37 C.F.R. §1.102 AND M.P.E.P. §708.02(XI)

This is a decision on the petition to make special, filed 14 July 2003, under 37 C.F.R. §102(d) in view of M.P.E.P. §708.02(XI): Inventions For Countering Terrorism.

M.P.E.P. §708.02 (XI), which sets out the prerequisites for a grantable petition for Inventions For Countering Terrorism under 37 C.F.R. §1.102(d), states in relevant part:

> International terrorism as defined in 18 U.S.C. 2331 includes "activities that - (A) involve violent acts or acts dangerous to human life that are a violation of the criminal laws of the United States or of any State, or that would be a criminal violation if committed within the jurisdiction of the United States or of any State; [and] (B) appear to be intended - (i) to intimidate or coerce a civilian population; (ii) to influence the policy of a government by intimidation or coercion; or (iii) to affect the conduct of a government by assassination or kidnapping..." The types of technology for countering terrorism could include, but are not limited to, systems for detecting/identifying explosives, aircraft sensors/security systems, and vehicular barricades/disabling systems.
>
> Applicants who desire that an application relating to inventions for countering terrorism be made special should file a petition with the petition fee under 37 CFR 1.17(h) requesting the Patent and Trademark Office to make the application special. The petition for special status should be accompanied by a statement explaining how the invention contributes to countering terrorism.

Petitioner's submission fails to meet the criteria set out with respect to countering terrorism in M.P.E.P. §708.02(XI). The claimed invention is generally directed to locating an electronic device which does not directly relate to countering violent acts or acts dangerous to human life intended to intimidate a population or influence the policy or conduct of a government.

Although it can be said that locating an electronic device would limit acts of terrorism, the method and system disclosed do not specifically teach locating terrorists or identifying potential terrorist acts (e.g. monitoring for trace materials or biological contaminants or notifying a user of a terrorist or potential terrorist act). It appears that the specification is silent with regard to the implementation of the invention with respect to identifying terrorism or terrorist acts, thereby preventing terrorism or terrorist acts. As a result, no advancement in the technology of countering terrorism has been persuasively shown.

Accordingly, the petition is **DISMISSED**. The application file is being forwarded to Central Files to await examination in its proper turn based on its effective filing date.

Any request for reconsideration must be filed within TWO MONTHS of the mailing date of this decision.

It is suggested that Applicant review M.P.E.P. §708.02 regarding other grounds available for filing a petition to make special. In particular, note M.P.E.P. §708.02(VIII): Accelerated Examination, which does not place limitations on the subject matter of the application.

Any inquiry concerning this decision should be directed to Vincent N. Trans whose telephone number is (703) 305-9750.

Vincent N. Trans
Special Program Examiner
Technology Center 2100
Computer Architecture, Software, and
Information Security
703-305-9750

UNITED STATES PATENT AND TRADEMARK OFFICE

COMMISSIONER FOR PATENTS
UNITED STATES PATENT AND TRADEMARK OFFICE
WASHINGTON, D.C. 20231
www.uspto.gov
DW 09-02

Paper No. 3

STETINA BRUNDA GARRED & BRUCKER
75 ENTERPRISE, SUITE 250
ALISO VIEJO CA 92656

COPY MAILED

SEP 1 6 2002

OFFICE OF PETITIONS

In re Application of Tran et al. Application No. 10/122,276 Filed: 12 April, 2002 Atty's Docket No. CCIOO-031A	DECISION GRANTING PETITION

This is a decision on the petition filed on 24 July, 2002, requesting that the above-identified application, including Figure 23 described in the specification, be accorded a filing date of 12 April, 2002.

On 12 April, 2002, the application was filed.

On 22 May, 2002, Initial Patent Examination Division mailed a Notice to File Missing Parts of Nonprovisional Application, stating that the application had been accorded a filing date of 12 April, 2002, but that, *inter alia*, Figure 23 described in the specification appeared to have been omitted.

In response, on 24 July, 2002 (certificate of mailing date 19 July, 2002), one (1) sheet of drawings containing Figure 13 and the present petition were submitted. Petitioners assert that one (1) sheet of drawings containing Figure 23 was filed with the other application papers on 12 April, 2002, but was subsequently misplaced in the U.S. Patent and Trademark Office (Office). In support, a copy of petitioners' postcard receipt was supplied with the present petition. The postcard receipt shows an Office date stamp of 04/12/02, and the above-identified application number. The postcard receipt also identifies the application by attorney docket number, and invention title, and acknowledges receipt, *inter alia*, of 17 sheets of drawings. Petitioners request that the application, including the one (1) sheet of drawings containing Figure 23 be accorded a filing date of 12 April, 2002.

Upon further review, 16 sheets of drawings containing Figures 1-22 have been located in the file. However, the evidence is convincing that the application papers deposited on 12 April, 2002, included one (1) sheet of drawing containing Figure 23 as described in the specification, which was subsequently misplaced in the Office. Therefore, the application, including the one (1) sheet of drawing containing Figure 23 as described in the specification, is entitled to a filing date of 12 April, 2001.

Accordingly, the Notice to File Missing Parts of Nonprovisional Application mailed on 22 May, 2002, is hereby vacated to the extent that it stated that Figure 23 described in the specification appeared to have been omitted.

In view of the above, the petition is granted. The petition fee of $130.00 will be credited to counsel's deposit account, No. 19-4330.

The application will be processed and examined using the application papers filed on 12 April, 2002, and the one (1) sheet of drawings containing Figure 23 supplied on 24 July, 2002. The copies of the other sheets of drawings supplied with the present petition will not be used for processing or examination, but will be retained in the application file.

The application is being returned to Initial Patent Examination Division for further processing with a filing date of 12 April, 2002, using the application papers filed that date, and the one (1) sheet of drawings containing Figure 23 supplied on 24 July, 2002, and for an indication on the bib-data sheet that 17 sheets of drawings were present on filing.

Telephone inquires should be directed to the undersigned at 703 308-6918.

Douglas I. Wood
Senior Petitions Attorney
Office of Petitions
Office of the Deputy Commissioner
for Patent Examination Policy

UNITED STATES PATENT AND TRADEMARK OFFICE

Commissioner for Patents
United States Patent and Trademark Office
P.O. Box 1450
Alexandria, VA 22313-1450
www.uspto.gov

Carmen Patti Law Group, LLC
One N. LaSalle Street
44th Floor
Chicago, IL 60602

COPY MAILED

SEP 28 2009

OFFICE OF PETITIONS

In re Application of	:	
Eric Harold Henrikson et al.	:	
Application No. 10/122,282	:	DECISION ON PETITION
Filed: April 12, 2002	:	
Attorney Docket No. LUC-328/Henrikson 8-10	:	

This is a decision on the petition under the unintentional provisions of 37 CFR 1.137(b), filed August 5, 2009, to revive the above-identified application.

The petition is **DISMISSED**.

Any request for reconsideration of this decision must be submitted within TWO (2) MONTHS from the mail date of this decision. Extensions of time under 37 CFR 1.136(a) are permitted. The reconsideration request should include a cover letter entitled "Renewed Petition under 37 CFR 1.137(b)." This is **not** a final agency action within the meaning of 5 U.S.C. § 704.

The application became abandoned for failure to reply in a timely manner to the non-final Office action mailed October 20, 2008, which set a shortened statutory period for reply of three (3) months. No extensions of time under the provisions of 37 CFR 1.136(a) were obtained. Accordingly, the application became abandoned on January 21, 2009. A Notice of Abandonment was mailed on June 23, 2009.

A grantable petition under 37 CFR 1.137(b) must be accompanied by: (1) the required reply, unless previously filed; (2) the petition fee as set forth in 37 CFR 1.17(m); (3) a statement that the entire delay in filing the required reply from the due date for the reply until the filing of a grantable petition pursuant to 37 CFR 1.137(b) was unintentional; and (4) any terminal disclaimer (and fee as set forth in 37 CFR 1.20(d)) required by 37 CFR 1.137(d). Where there is a question as to whether either the abandonment or the delay in filing a petition under 37 CFR 1.137 was unintentional, the Director may require additional information. See MPEP 711.03(c)(II)(C) and (D). The instant petition lacks item (3).

As to item (3) a proper statement of unintentional delay was not provided.

Further correspondence with respect to this matter should be addressed as follows:

By Mail: Mail Stop PETITION
Commissioner for Patents
P. O. Box 1450
Alexandria, VA 22313-1450

By hand: U. S. Patent and Trademark Office
Customer Service Window, Mail Stop Petitions
Randolph Building
401 Dulany Street
Alexandria, VA 22314

The centralized facsimile number is **(571) 273-8300.**

Telephone inquiries concerning this decision should be directed to Kimberly Inabinet at (571) 272-4618.

Carl Friedman
Petitions Examiner
Office of Petitions

UNITED STATES PATENT AND TRADEMARK OFFICE

Commissioner for Patents
United States Patent and Trademark Office
P.O. Box 1450
Alexandria, VA 22313-1450
www.uspto.gov

Carmen Patti Law Group, LLC
One N. LaSalle Street
44th Floor
Chicago, IL 60602

COPY MAILED
JAN 08 2010

In re Application of	:	
Eric Harold Henrikson et al.	:	
Application No. 10/122,282	:	DECISION ON PETITION
Filed: April 12, 2002	:	
Attorney Docket No. LUC-328/Henrikson 8-10	:	

This is a decision on the renewed petition under the unintentional provisions of 37 CFR 1.137(b), filed October 1, 2009, to revive the above-identified application.

The petition is **GRANTED**.

The application became abandoned for failure to reply in a timely manner to the non-final Office action mailed October 20, 2008, which set a shortened statutory period for reply of three (3) months. No extensions of time under the provisions of 37 CFR 1.136(a) were obtained. Accordingly, the application became abandoned on January 21, 2009. A Notice of Abandonment was mailed on June 23, 2009.

The petition satisfies the requirements of 37 CFR 1.137(b) in that petitioner has supplied (1) the reply in the form of an amendment after non-final, (2) the petition fee of $1,620.00, and (3) a proper statement of unintentional delay. Accordingly, the amendment is accepted as being unintentionally delayed.

An additional petition fee was paid along with the filing of the renewed petition. This fee is unnecessary and will be refunded to the petitioner's credit card.

The petition decision mailed September 28, 2009 dismissed the petition filed on August 5, 2009 for failure to provide a proper statement of unintentional delay. The renewed petition includes a proper statement.

37 CFR 1.137(b)(3) requires a statement that the entire delay in filing the required reply from the due date for the reply until the filing of a grantable petition pursuant to 37 CFR 1.137(b) was unintentional. Since the statement contained in the petition varies from the language required by 37 CFR 1.137(b)(3), the statement contained in the petition is being construed as the statement required by 37 CFR 1.137(b)(3). Petitioner must notify the Office if this is **not** a correct interpretation of the statement contained in the petition.

Telephone inquiries concerning this decision should be directed to Kimberly Inabinet at (571) 272-4618.

This application is being referred to Technology Center AU 2451 for appropriate action by the Examiner in the normal course of business on the reply received August 5, 2009.

Carl Friedman
Petitions Examiner
Office of Petitions

RECEIVED
CENTRAL FAX CENTER
OCT 01 2009

LUC-328/Henrikson 8-10

IN THE UNITED STATES
PATENT AND TRADEMARK OFFICE

Inventor(s):	Henrikson, Eric H. et al.		
Case No.:	LUC-328/Henrikson 8-10	**Examiner**	Saket K. Daftuar
Serial No.:	10/122,282	**Art Unit:**	2451
Filing Date:	04/12/2002		
Title:	System and Method For Effecting Conference Calling		

CERTIFICATE OF FACSIMILE TRANSMISSION

I hereby certify that this correspondence is being sent via facsimile transmission to Commissioner for Patents, Mail Stop RCE, Group Art Unit 2451, Attention: Examiner Saket K. Daftuar, P.O. Box 1450, Alexandria, VA 22313-1450, at fax number (571) 273-8300, on October 1, 2009.

Carmen Patti

Carmen B. Patti
Attorney for Applicant
Reg. No. 26,784

Date of Signature: October 1, 2009

Commissioner for Patents
Mail Stop Amendment
Group Art Unit 2451
Attention: Examiner Saket K. Daftuar
P.O. Box 1450
Alexandria, VA 22313-1450
Fax Number (571) 273-8300

RENEWED PETITION UNDER 37 CFR §1.137(B)

Dear Sir:

Applicant respectfully petitions under 37 CFR §1.137(b) that the captioned application above be revived as a pending application of one unintentionally abandoned.

A Petition to Revive an Unintentionally Abandoned Application under 37 CFR §1.137(b) must be accompanied by (1) the reply required to the outstanding office action; (2) the petition fee set forth in 37 CFR §1.17(m); (3) a statement that the entire delay was unintentional; and (4) a terminal disclaimer and fee as set forth in 37 CFR §1.20(d).

10/02/2009 JVONG1 00000054 10122282
01 FC:1453 1620.00 OP

PAGE 1/18 * RCVD AT 10/1/2009 4:32:09 PM [Eastern Daylight Time] * SVR:USPTO-EFXRF-6/17 * DNIS:2738300 * CSID:13123462810 * DURATION (mm-ss):04-06

RECEIVED
CENTRAL FAX CENTER
OCT 01 2009

(1) A response to the Office Action in the form of a Response is attached responding to the outstanding office action mailed October 20, 2008; and a terminal disclaimer under 37 CFR §1.20(d) is not required for the captioned application because it was filed after June 8, 1995.

(2) The petition fee of **$1,620.00** as set forth in 37 CFR §1.17(m) is hereby authorized to be charge to the **Carmen Patti Law Group, LLC Business Credit Card**.

(3) The captioned application became abandoned for failure to properly respond to an Office Action mailed October 20, 2008 and the failure to respond was an unintentional delay. The possible misunderstanding was discovered on or about June 25, 2009 in an investigation of our files, which was then confirmed in a subsequent investigation, and a response to the outstanding action was then prepared. The entire delay in filing the required reply, from the due date for reply to the date of filing the instant petition, was unintentional delay.

(4) A terminal disclaimer under 37 CFR §1.20(d) is not required for the captioned application because it was filed after June 8, 1995.

In the event of under or overpayment of a fee at anytime during the prosecution of the subject application, the Commissioner is hereby authorized to charge or credit the **Carmen Patti Law Group, LLC Credit Card** the amount necessary to correct the error.

Applicant respectfully petitions that the captioned application above be revived as a pending application.

Respectfully submitted,

Carmen B. Patti
Reg. No. 26,784

Carmen Patti Law Group, LLC
Customer Number 47382

CERTIFICATE OF FACSIMILE

I hereby certify that this correspondence is being sent via facsimile to Mail Stop Petitions, Commissioner for Patents, P.O. Box 1450, Alexandria, VA 22313-1450, at (571) 273-8300, on October 1, 2009.

Carmen B. Patti October 1, 2009

PAGE 2/18 * RCVD AT 10/1/2009 4:32:09 PM [Eastern Daylight Time] * SVR:USPTO-EFXRF-6/17 * DNIS:2738300 * CSID:13123462810 * DURATION (mm-ss):04-06

UNITED STATES PATENT AND TRADEMARK OFFICE

COMMISSIONER FOR PATENTS
UNITED STATES PATENT AND TRADEMARK OFFICE
P.O. BOX 1450
ALEXANDRIA, VA 22313-1450
www.uspto.gov

Paper No. 11

ANTONELLI, TERRY, STOUT & KRAUS, LLP
1300 NORTH SEVENTEENTH STREET
SUITE 1800
ARLINGTON VA 22209-9889

COPY MAILED

DEC 15 2003

OFFICE OF PETITIONS

In re Application of
Fujita et al.
Application No. 10/122,295
Filed: April 16, 2002
Attorney Docket No. 389.33993CV5

In re Application of
Fujita et al.
Application No. 10/447,291
Filed: September 11, 2002
Attorney Docket No. 389.33993CV6

DECISION GRANTING PETITION

This is a decision on petition under 37 CFR § 1.53(e) filed April 7, 2003, requesting that an improper Continued Prosecution Application (CPA) under 37 CFR § 1.53(d) be treated as an application under 37 CFR § 1.53(b) and be accorded a filing date of September 11, 2002.

On September 11, 2002, applicants submitted a request for a CPA under 37 CFR § 1.53(d) based on prior application No. 10/122,295. The Office notes that at the time the CPA was filed CPA practice no longer applied to applications, other than design applications, if the prior application was filed on or after May 29, 2000. Accordingly, the CPA request was improper because the prior application was filed on or after May 29, 2000.[1]

In the event that an applicant files a request for a CPA of a utility or plant application that was filed on or after May 29, 2000 (to which CPA practice no longer applies), the Office will automatically treat the improper CPA as a request for continued examination of the prior application (identified in the request for CPA) under new 37 CFR § 1.114.

---

[1]Effective July 14, 2003, the Office eliminated CPA practice as to utility and plant applications. *See Elimination of Continued Prosecution Application Practice as to Utility and Plant Patent Applications, 68 FR 32376 (May 30, 2003), 1271 Off. Gaz. Pat. Office 143 (June 24, 2003) (final rule).*

However, in this instance, the CPA request filed on September 11, 2002, cannot be treated as an RCE because continued examination under 37 CFR § 1.114 does not apply to an application unless prosecution in the application is closed.

On April 7, 2003, applicants filed the present petition under 37 CFR § 1.53(e). Applicants requested that the improper CPA be converted to an application under 37 CFR § 1.53(b). With the present petition, applicants submitted complete application papers (i.e. specification, including claims, drawings, and a copy of the declaration filed in a prior application), a preliminary amendment, an IDS, and a letter to claim foreign priority.

The petition is granted.

The application under 37 CFR § 1.53(b) filed on September 11, 2002, has been assigned application No. 10/447,291. The CPA request, the present petition, the application papers, a preliminary amendment, an IDS, and a letter to claim foreign priority have been removed from the file of application No. 10/122,295 and have been placed in application No. 10/447,291. A copy of the CPA request and the present petition have been retained in application No. 10/122,295 to complete the record therein. All further correspondence concerning the application under 37 CFR § 1.53(b) should be directed to application No. 10/447,291, not application No. 10/122,295.

The Office finance records indicate that the $740.00 filing fee and $420.00 claim fees paid on September 11, 2002, were paid in application No. 10/447,291. The Office finance records will be corrected to show that the $130.00 petition fee was paid in application No. 10/447,291, not in application No. 10/122,295.

Application No. 10/122,295 will be forwarded to Technology Center 3700.

Application No. 10/447,291 will be forwarded to the Office of Initial Patent Examination for further processing as an application filed under 37 CFR § 1.53(b), not under 37 CFR § 1.53(d), with a filing date of September 11, 2002, using the copy of the original application papers submitted on September 11, 2002.

Telephone inquiries concerning this matter may be directed to Senior Petitions Attorney Christina Tartera Donnell at (703)306-5589.

Eugenia A. Jones 306-5586

Eugenia A. Jones
Senior Legal Advisor
Office of Patent Legal Administration
Office of the Deputy Commissioner
for Patent Examination Policy

UNITED STATES PATENT AND TRADEMARK OFFICE

Commissioner for Patents
United States Patent and Trademark Office
P.O. Box 1450
Alexandria, VA 22313-1450
www.uspto.gov

FEB 17 2005

Antonelli, Terry, Stout, & Kraus, LLP
1300 North Seventeenth Street
Suite 1800
Arlington, VA 22209-9889

In re Application of	:	
Richard C. Fuisz	:	DECISION ON PETITION
Serial No. : 10/122,299	:	UNDER 37 CFR 1.181
Filed : April 16, 2002	:	
For : Skin Marking for Indicating Subdermal Chip	:	

This is a decision on a petition being treated under 37 CFR 1.181 that was filed October 21, 2004 requesting withdrawal of the finality of the Office action mailed March 17, 2004 and/or entry of the amendment filed September 17, 2004. There is no fee required for this petition.

Background

A non-final Office action was mailed October 6, 2003 in which the examiner rejected claims 1-6 (all of the claims in the application) under 35 USC 112, 2nd paragraph objecting to a specific alternative language found in the claims. The claims were also rejected under 35 USC 103(a) over a device marketed under the name of VeriChip in view of Sinanan et al.

On January 6, 2004, applicant filed an amendment amending the claims to eliminate the objectionable alternative language. No further changes to the claims were made. Applicant also presented arguments as to why he considered the claims to be patentable over the applied art.

On March 17, 2004, a final rejection was mailed to applicant in response to applicant's amendment. The final rejection again rejected all claims under 35 USC 112, 2nd paragraph, this time objecting to a different limitation in the claims. The claims were also rejected under 35 USC 102(b) as being anticipated by Feierbach.

Applicant filed an amendment on September 17, 2004 amending the claims, pointing out that the final rejection was premature and requested entry of the amendment.

On October 19, 2004, the examiner issued an Advisory Action denying entry of the September 17, 2004 amendment on the grounds that it raised new issues that would require further consideration and/or search. No comments were offered regarding applicant's request to have the finality of the previous action withdrawn.

On October 21, 2004, the instant petition was filed.

Discussion

Section 706.07(a) of the Manual of Patent Examining Procedure (MPEP), Revision 2 dated May 2004, discuses the guidelines to be followed when making an Office action final. The MPEP indicates that an action may be made final on a second action "except where the examiner introduces a new ground of rejection that is neither necessitated by applicant's amendment of the claims nor based on information submitted in an information disclosure statement filed during the period set forth in 37 CFR 1.97(c)".

In the final Office action of March 17, 2004, claims 1-6 were rejected under 35 USC 112, 2nd paragraph for a second time. However, the objectionable language pointed out by the examiner was not the same as that pointed out in the first Office action. Further, the new objectionable language was present in the original claims. In addition, the amendment made to the claims was made strictly to eliminate the objectionable language pointed out by the examiner in that first Office action. The amendment in no way changed the substance or scope of the claims. Nevertheless, the examiner introduced a new ground of rejection under 35 USC 102(b) over a newly cited reference.

Conclusion

Clearly, applicant's amendment filed January 6, 2004 did not necessitate the new grounds of rejections and the final rejection mailed March 17, 2004 was premature and therefore is hereby withdrawn. The amendment filed September 17, 2004 has been entered and the Advisory Action mailed October 19, 2004 has been vacated.

Upon the mailing of this decision, the file will be forwarded to the Supervisory Legal Instruments Examiner for the withdrawal of the finality of the Office action of March 17, 2004 and entry of the amendment filed September 17, 2004, prior to returning the file to the examiner for treatment on the merits.

Summary: Finality of Office action mailed March 17, 2004 withdrawn.
Amendment filed September 17, 2004 entered.
Advisory action mailed October 19, 2004 vacated.

Richard A. Bertsch

Esther M. Kepplinger, Director
Technology Center 3700
Phone: (571) 272-2975

ak/02/16/05

UNITED STATES PATENT AND TRADEMARK OFFICE

Commissioner for Patents
United States Patent and Trademark Office
P.O. Box 1450
Alexandria, VA 22313-1450
www.uspto.gov

ANTONELLI, TERRY, STOUT & KRAUS, LLP
1300 NORTH SEVENTEENTH STREET
SUITE 1800
ARLINGTON VA 22209-3873

COPY MAILED

APR 0 4 2007

OFFICE OF PETITIONS

In re Application of	:	
Richard Fuisz	:	
Application No. 10/122,299	:	ON PETITION
Filed: April 16, 2002	:	
Attorney Docket No. 847.41189X00	:	

This is a decision on the petition under the unintentional provisions of 37 CFR 1.137(b), filed November 21, 2006, to revive the above-identified application.

The petition is **GRANTED**.

The petition satisfies the requirements of 37 CFR 1.137(b) in that petitioner has supplied (1) the reply in the form of a continuing application under 37 CFR 1.53(b); (2) the petition fee of $750; and (3) a proper statement of unintentional delay.

This application is being revived solely for purposes of continuity. As continuity has been established by this decision, the application is again abandoned in favor of continuing application No. 11/602,405.

Telephone inquiries concerning this decision should be directed to April Wise at (571) 272-1642.

Irvin Dingle
Petitions Examiner
Office of Petitions

UNITED STATES PATENT AND TRADEMARK OFFICE

Commissioner for Patents
United States Patent and Trademark Office
P.O. Box 1450
Alexandria, VA 22313-1450
www.uspto.gov

November 2005

OLDS, MAIER & RICHARDSON, PLLC
PO BOX 20245
ALEXANDRIA, VA 22320-1245

NOV 0 9 2005

In re Application of Rodney Clark et al. Application No. 10/122,320 Filed: April 16, 2002 Attorney Docket No. MEMS-0185-US	: : : : :	DECISION ON PETITION

This is a decision on the petition filed July 1, 2004, requesting that the holding of abandonment in the above-identified application be withdrawn.

The petition to withdraw the holding of abandonment is GRANTED.

An Office action (Supplemental Office communication) was mailed on October 21, 2003, setting a one-month or thirty-day period of response. A Notice of Abandonment was mailed on June 2, 2004.

Petitioner asserts that a Reply to Election of Species Requirement (Reply) in response to the Supplemental Office communication was timely filed in the Patent and Trademark Office on November 21, 2003. This is evidenced by a complete copy of the previously filed Reply and the postcard receipt indicating receipt of the Reply in the Patent and Trademark Office on November 21, 2003.

The review of the application file reveals that the Reply in response to the October 21, 2003 Office action was received and matched with the file. However, the Reply was not noticed by either the examiner or the technical support staff and consequently the application was held to be abandoned. The application is not abandoned in fact.

The Reply was timely filed, since the effective filing date of the paper (which meets the requirements of 37 C.F.R. § 1.8) is prior to the date of abandonment of the application. Accordingly, the petition is granted.

For the above reasons, the Notice of Abandonment is hereby vacated and the holding of abandonment withdrawn. Inconvenience to petitioner is regretted.

The application file is being forwarded to the technical support staff for processing the Reply to Election of Species Requirement. From there, it will be returned to the examiner for further prosecution. Additional papers filed on March 19, 2004 and January 14, 2005 have been received and will also be processed.

Questions regarding this decision should be directed to Jose' G. Dees at 571-272-1569.

Janice A. Falcone, Director
Technology Center 2800
Semiconductors, Electrical and Optical
Systems and Components

UNITED STATES PATENT AND TRADEMARK OFFICE

Commissioner for Patents
United States Patent and Trademark Office
P.O. Box 1450
Alexandria, VA 22313-1450
www.uspto.gov

RUSSELL REYNEKE LAW CORP
SUITE 700 TWO BENTALL CENTRE
555 BURRARD ST
VANCOUVER V7X 1M8
CANADA

COPY MAILED

MAR 30 2005

OFFICE OF PETITIONS

In re Application		
David L. Jones	:	DECISION REGARDING
Application No. 10/122,346	:	RECONSIDERATION OF
Filed: April 16, 2002	:	PATENT TERM ADJUSTMENT
Patent No. 6,755,891	:	
Issued: June 29, 2004	:	

This is in response to the letter filed July 7, 2004, seeking reconsideration of the patent term adjustment indicated on the patent.

The application for patent term adjustment under § 1.705(d) is **DISMISSED**. Patentee did not pay the required $200 PTA fee, and as such, the Office will not look into the matter on the merits. Patentee is given **THIRTY (30) DAYS** from the mail date of this decision to respond. No extensions of time will be granted under § 1.136.

Telephone inquiries specific to this matter should be directed to Cliff Congo, Petitions Attorney, at (571)272-3207.

Karin Ferriter
Senior Legal Advisor
Office of Patent Legal Administration
Office of Deputy Commissioner
for Patent Examination Policy

UNITED STATES PATENT AND TRADEMARK OFFICE

Commissioner for Patents
United States Patent and Trademark Office
P.O. Box 1450
Alexandria, VA 22313-1450
www.uspto.gov

RUSSELL REYNEKE LAW CORP
SUITE 700 TWO BENTALL CENTRE
555 BURRARD ST
VANCOUVER V7X 1M8
CANADA

COPY MAILED
OCT 3 1 2005
OFFICE OF PETITIONS

In re Patent No. 6,755,891	:	DECISION ON
David L. Jones	:	PATENT TERM ADJUSTMENT
Issue Date: June 29, 2004	:	AND NOTICE OF INTENT
Application No. 10/122,346	:	TO ISSUE
Filed: April 16, 2002	:	CERTIFICATE OF
Attorney Docket No. 180801 (COM)	:	CORRECTION

This is a decision on the letter filed April 13, 2005. Patentee requests that the patent term adjustment indicated on the patent be corrected from zero (0) days to twenty (20) days.

The petition is **GRANTED**.

The patent term adjustment indicated on the patent is to be corrected by issuance of a certificate of correction showing a revised Patent Term Adjustment of **twenty (20)** days.

On June 29, 2004, the above-identified application matured into U.S. Patent No. 6,755,891. The patent issued with a patent term adjustment of zero (0) days. On July 7, 2004, patentee timely filed an application for patent term adjustment. However, application for patent term adjustment was dismissed in a decision mailed on March 30, 2005, because patentee did not pay the $200 fee. Patentee was given thirty days from the mail date of the decision to submit the fee.

Patentee fails to state whether the patent is subject to a terminal disclaimer.

Patentee asserts that he should not have been assessed applicant delay of seventy-five (75) days for the submission formal drawings after the Notice of Allowance on April 16, 2004.

A review of the record indicates that no formal drawings were filed on April 16, 2004.

In view thereof, the correct determination of PTA at the time of issuance is twenty (20) days (81 days of PTO delay and 61 days of applicant delay).

Receipt of the $200.00 fee set forth in 37 C.F.R. §1.18(e) is acknowledged.

The application file is being forwarded to the Certificates of Correction Branch for issuance of a certificate of correction in order to rectify the error regarding the patent term information. See 35 U.S.C. § 254 and 37 C.F.R. § 1.322. The certificate of correction will indicate that the term of the above-identified patent is extended or adjusted by **twenty (20)** days, subject to any disclaimers.

Telephone inquiries specific to this matter should be directed to Cliff Congo, Petitions Attorney, at (571)272-3207.

Karin a Ferriter per

Karin Ferriter
Senior Legal Advisor
Office of Patent Legal Administration
Office of Deputy Commissioner
for Patent Examination Policy

Enc: draft certificate of correction

UNITED STATES PATENT AND TRADEMARK OFFICE

Commissioner for Patents
United States Patent and Trademark Office
P.O. Box 1450
Alexandria, VA 22313-1450
www.uspto.gov

KEATING & BENNETT LLP
SUITE 312
10400 EATON PLACE
FAIRFAX, VA 22030

COPY MAILED
MAY 1 8 2004
OFFICE OF PETITIONS

In re Application of
Hiroke Watanabe et al
Application No. 10/122,352
Filed: April 16, 2002
Attorney Docket No. 36856.693

: DECISION ON PETITION
: UNDER 37 CFR 1.313(c)(2)

This is a decision on the petition under 37 CFR 1.313(c)(2), filed May 6, 2004, to withdraw the above-identified application from issue after payment of the issue fee.

The petition is **DISMISSED as moot**.

Unfortunately, the instant petition was not received within sufficient time to avert the issuance of the above-identified application into a patent. The Office sincerely apologizes for any inconvenience caused petitioner in this matter.

Petitioner's attention is directed to 37 CFR 1.313(d), which states:

> A petition under this section will not be effective to withdraw the application from issue unless it is actually received and granted by the appropriate officials **before the date of issue**.

Since this application has issued, the concurrently filed request for continued examination (RCE) is improper and will not be processed. In view thereof, the $770 filing fee submitted therefor, as well as the petition fee of $130, will be refunded in due course.

The Information Disclosure Statement has been placed in the file of the above-identified application without further consideration. See 37 CFR 1.97(i).

Telephone inquiries should be directed to the undersigned at (703) 305-8680.

The patented file is being forwarded to Files Repository.

Frances Hicks

Frances Hicks
Lead Petitions Examiner
Office of Petitions
Office of the Deputy Commissioner
for Patent Examination Policy

UNITED STATES PATENT AND TRADEMARK OFFICE

Commissioner for Patents
United States Patent and Trademark Office
P.O. Box 1450
Alexandria, VA 22313-1450
www.uspto.gov

SMITH FROHWEIN TEMPEL GREENLEE BLAHA, LLC
Two Ravinia Drive
Suite 700
ATLANTA GA 30346

COPY MAILED
JAN 12 2010

In re Patent No. 6,947,417	:	
Issue Date: September 20, 2005	:	
Application No. 10/122,397	:	ON PETITION
Filed: April 16, 2002	:	
Attorney Docket No. 07001.1412	:	

This is a decision on the petition under 37 CFR 1.378(c), filed November 10, 2009, to accept the unintentionally delayed payment of a maintenance fee for the above-identified patent.

The petition is **GRANTED**.

This patent expired at midnight September 20, 2005, for failure to pay the 3½ year maintenance fee. Since this petition was submitted within twenty-four months after the six-month grace period provided in 37 CFR 1.362(e), the petition was timely filed under the provisions of 37 CFR 1.378(c).

The maintenance fee is hereby accepted and the above-identified patent is reinstated as of the mail date of this decision.

Telephone inquiries concerning this decision should be directed to JoAnne Burke at (571) 272-4584.

JoAnne Burke
Petitions Examiner
Office of Petitions

UNITED STATES PATENT AND TRADEMARK OFFICE

Commissioner for Patents
United States Patent and Trademark Office
P.O. Box 1450
Alexandria, VA 22313-1450
www.uspto.gov

JUN 25 2004

Mitchell Silberberg & Knupp LLP
11377 W. Olympic Boulevard
Los Angeles CA 90064-1683

In re Application of	:	
Sol Weiss	:	
Serial No.: 10/122,450	:	DECISION ON PETITION
Filed: April 13, 2002	:	
For: Attachable Surgical Accessory	:	
Instrument	:	

This is in response to applicants' petition filed May 24, 2004, to make the above-identified application special under the provisions of 37 CFR 1.102(c), based on the age of the applicant.

Applicant has satisfied the provisions set forth in M.P.E.P. 708.02, IV. Therefore the petition is **GRANTED**.

The application will be forwarded to the examiner for action on the merits commensurate with this decision.

Should there be any questions with regard to this letter please contact John Kittle by letter addressed to the Director, Technology Center 3700/2900, Washington, DC 20231, or by telephone at (703) 308-0873 or by facsimile transmission at (703) 308-3139.

John E. Kittle

John E. Kittle
Director,
Technology Center 3700/2900

UNITED STATES PATENT AND TRADEMARK OFFICE

Commissioner for Patents
United States Patent and Trademark Office
P.O. Box 1450
Alexandria, VA 22313-1450
www.uspto.gov

TOWNSEND AND TOWNSEND AND CREW, LLP
TWO EMBARCADERO CENTER, EIGHTH FLOOR
SAN FRANCISCO, CA 94111-3834

COPY MAILED

JAN 23 2006

OFFICE OF PETITIONS

In re Application of	:	
Michael V. Chobotov et al	:	
Application No. 10/122,474	:	DECISION ON PETITION
Filed: April 11, 2002	:	TO WITHDRAW
Attorney Docket No. 021630-000521US	:	FROM RECORD
	:	

This is a decision on the Request to Withdraw as attorney or agent of record under 37 C.F.R. § 1.36(b), filed December 1, 2005 and supplemented on January 13, 2006.

The request is **APPROVED**.

A grantable request to withdraw as attorney/agent of record must be signed by every attorney/agent seeking to withdraw or contain a clear indication that one attorney is signing on behalf of another/others. A request to withdraw will not be approved unless at least 30 (thirty) days would remain between the date of approval and the later of the expiration date of a time to file a response or the expiration date of the maximum time period which can be extended under 37 C.F.R. § 1.136(a).

The request was signed by Nicholas V. Sherbina on behalf of all attorneys of record who are associated with customer No. 20350. Applicant is reminded that there is no attorney of record at this time.

The correspondence address of record has been changed and the new correspondence address is the address indicated below.

Telephone inquiries concerning this decision should be directed to Irvin Dingle at (571) 272-3210.

Denise Pothier
Petitions Examiner
Office of Petitions

cc: RatnerPrestia P.C.
Paul F. Prestia, Esq.
1235 Westlakes Drive, Berwyn, Suite 301
P.O. Box 980
Valley Forge, PA 19482

cc: Trivasculas Inc.
3660 North Laughlin Road
Santa Rosa, CA 95403

SPE RESPONSE FOR CERTIFICATE OF CORRECTION

Paper No.: _____

DATE : 02/16/08

TO SPE OF : ART UNIT 2872

SUBJECT : Request for Certificate of Correction for Appl. No.: **10/122520** Patent No.: **7036944**

Please respond to this request for a certificate of correction within 7 days.

Please review the requested changes/corrections as shown in the **COCIN** document(s) in the IFW application image. No new matter should be introduced, nor should the scope or meaning of the claims be changed.

Please complete the response (see below) and forward the completed response to scanning using document code **COCX**.

Angela Green
Certificates of Correction Branch
703.308.9380 ext. 123

Thank You For Your Assistance

The request for issuing the above-identified correction(s) is hereby:
Note your decision on the appropriate box.

- ☒ **Approved** — **All** changes apply.
- ☐ **Approved in Part** — Specify below which changes **do not** apply.
- ☐ **Denied** — State the reasons for denial below.

Comments: Changes do not impact scope of patent. All changes approved.

Stephone B. Allen
Supervisory Patent Examiner

SPE — 2872 Art Unit

UNITED STATES PATENT AND TRADEMARK OFFICE

Commissioner for Patents
United States Patent and Trademark Office
P.O. Box 1450
Alexandria, VA 22313-1450
www.uspto.gov

BROOKS KUSHMAN P.C./LEAR CORPORATION
1000 TOWN CENTER
TWENTY-SECOND FLOOR
SOUTHFIELD MI 48075-1238

COPY MAILED

DEC 06 2004

OFFICE OF PETITIONS

In re Application of :
Terrence G. Gohl et al :
Application No. 10/122,536 : ON PETITION
Filed: April 15, 2002 :
Attorney Docket No. LEAR 0878 PUSP/03341 :

This is a decision on the petition, filed December 1, 2004 and supplemented on December 2, 2004, which is being treated under 37 CFR 1.313(c)(3) to withdraw the above-identified application from issue after payment of the issue fee.

The petition is **GRANTED**.

The above-identified application is withdrawn from issue for express abandonment. See 37 CFR 1.313(c)(3).

The application is hereby withdrawn from issue, and the abandonment is hereby recognized.

Telephone inquiries should be directed to the undersigned at (571) 272-3208.

The application is being referred to Files Repository.

Karen Creasy

Karen Creasy
Petitions Examiner
Office of Petitions
Office of the Deputy Commissioner
for Patent Examination Policy

UNITED STATES PATENT AND TRADEMARK OFFICE

COMMISSIONER FOR PATENTS
UNITED STATES PATENT AND TRADEMARK OFFICE
WASHINGTON, D.C. 20231
www.uspto.gov
DW 09-02

Paper No. 5

MILLS & ONELLO, LLP
SUITE 605
ELEVEN BEACON STREET
BOSTON MA 02108

COPY MAILED

SEP 2 0 2002

OFFICE OF PETITIONS

In re Application of	:
Sami Daould	:
Application No. 10/122,547	: DECISION REFUSING STATUS
Filed: 12 April, 2002	: UNDER 37 CFR 1.47(b)
Attorney Docket No. TSC-0013	:

This is in response to the petition filed on 12 August, 2002, under 37 CFR 1.47(b).

The petition is **DISMISSED**.

Rule 47 applicant is given TWO MONTHS from the mailing date of this decision to reply, correcting the below-noted deficiencies. Any reply should be entitled "Request for Reconsideration of Petition Under 37 CFR 1.47(b)," and should only address the deficiencies noted below, except that the reply may include an oath or declaration executed by the non-signing inventor. **FAILURE TO RESPOND WILL RESULT IN ABANDONMENT OF THE APPLICATION.** Extensions of time may be obtained in accordance with 37 CFR 1.136(a).

The above-identified application was filed on 12 April, 2002, without an executed oath or declaration.

Accordingly, on 28 May, 2002, Initial Patent Examination Division mailed a Notice To File Missing Parts of Nonprovisional Application requiring an executed oath or declaration and a surcharge for its late filing.

In response, on 12 August, 2002, the present petition was filed, accompanied by the late filing surcharge, and a one (1) month extension of time.

Petitioner asserts that a copy of the application papers was sent to the non-signing inventor, but that the inventor refused, via e-mail to sign the declaration.

A grantable petition under 37 CFR 1.47(b) requires:

(1) proof that the non-signing inventor cannot be reached or refuses to sign the oath or declaration after having been presented with the application papers (specification, claims and drawings);

(2) an acceptable oath or declaration in compliance with 35 U.S.C. §§ 115 and 116;

(3) the petition fee;

(4) a statement of the last known address of the non-signing inventor;

(5) proof of proprietary interest, and

(6) proof of irreparable damage.

The petition lacks items (1) and (2). In regards to item (1), since the inventor refused in writing (e-mail) to sign the declaration, petitioners must provide a copy of that written refusal with any renewed petition.

As to item (2), an oath or declaration for the patent application in compliance with 37 CFR 1.63 and 1.64 has not been presented. A declaration in compliance with 37 CFR 1.63, 1.64, and 1.67 must be presented, signed by all of the signing inventors, if any. If no inventor(s) will sign the declaration, the declaration may be signed on behalf of the inventor by an assignee. The oath or declaration must be signed by an officer of the corporation (president, vice president, secretary, or treasurer) on behalf of and as agent for the non-signing inventor(s). The officer must identify his/her title in the declaration, as well as his/her mailing address, residence, if the applicant lives at a different location from where he or she customarily receives mail, as well as the citizenship of individual signing on behalf of the non-signing inventor. If the oath or declaration is not signed by an officer of the corporation, then proof of authority of the person signing on behalf of the corporation must be submitted.[1]

Further correspondence with respect to this matter should be addressed as follows:

By mail: Assistant Commissioner for Patents
Box DAC
Washington, D.C. 20231

[1] MPEP 409.03(b).

By FAX: (703) 308-6916
Attn: Office of Petitions

By hand: Crystal Plaza Four, Suite 3C23
2201 S. Clark Place
Arlington, VA

Telephone inquiries related to this decision should be directed to the undersigned at (703)308-6918.

Douglas I. Wood
Senior Petitions Attorney
Office of Petitions
Office of the Deputy Commissioner
for Patent Examination Policy

UNITED STATES PATENT AND TRADEMARK OFFICE

COMMISSIONER FOR PATENTS
UNITED STATES PATENT AND TRADEMARK OFFICE
WASHINGTON, D.C. 20231
www.uspto.gov

Paper No. 8

MILLS & ONELLO, LLP
SUITE 605
ELEVEN BEACON STREET
BOSTON MA 02108

COPY MAILED

JAN 07 2003

OFFICE OF PETITIONS

In re Application of	:	
Sami Daoud	:	
Application No. 10/122,547	:	DECISION ACCORDING STATUS
Filed: 12 April, 2002	:	UNDER 37 CFR 1.47(b)
Attorney Docket No. TSC-0013	:	

This is in response to the renewed petition filed on 26 December, 2002 (certificate of mailing date 19 December, 2002), under 37 CFR 1.47(b).

The petition is **GRANTED**.

Petitioners have shown that the nonsigning inventor, Sami Daoud, has refused to join in the filing of the above-identified application after having been sent a copy of the application papers. The inventor has not returned an executed declaration, however. In addition, petitioners have shown, via a copy of the employment agreement between the non-signing inventor and Textron Systems (Textron) that petitioner Textron has a proprietary interest in the above-identified application. Lastly, petitioner has submitted a declaration in compliance with 37 CFR 1.63, 1.64, and 1.175, signed by Lesley A. Hamlin, Assistant Secretary of Textron as well as a statement by petitioner's registered patent attorney, Anthony O. Onello, Jr., that Ms. Hamlin is authorized to act on behalf of Textron, and has demonstrated that such action is necessary to prevent irreparable damage.

This application and papers have been reviewed and found in compliance with 37 CFR 1.47(b). This application is hereby accorded Rule 1.47(b) status.

As provided in Rule 1.47(c), this Office will forward notice of this application's filing to the non-signing inventors at the addresses listed in the petition. Notice of the filing of this application will also be published in the Official Gazette.

In accepting this petition, the Office is construing Lesley A. Hamlin, Assistant Secretary for Textron, as having authority to act on behalf of the corporation. Petitioners **must** inform the Office if this is an incorrect interpretation.

The application file is being forwarded to Technology Center 1700 for examination in due course.

Telephone inquiries regarding this communication should be directed to the undersigned at 703.308.6918.

D Wood

Douglas I. Wood
Senior Petitions Attorney
Office of Petitions
Office of the Deputy Commissioner
for Patent Examination Policy

UNITED STATES PATENT AND TRADEMARK OFFICE

COMMISSIONER FOR PATENTS
UNITED STATES PATENT AND TRADEMARK OFFICE
WASHINGTON, D.C. 20231
www.uspto.gov
DIW 01-03

Sami Daoud
5 Scott Road
Bedford, NH 03110

COPY MAILED

JAN 07 2003

OFFICE OF PETITIONS

In re Application of
Sami Daoud
Application No. 10/122,547
Filed: 12 April, 2002
For: THERMAL BATTERY

Dear Mr. Daoud:

You are named as the sole inventor in the above identified United States patent application, filed under the provisions of 35 U.S.C. 118 (United States Code), and 37 CFR 1.47(b), Rules of Practice in Patent Cases. Should a patent be granted on the application you will be designated therein as the sole inventor.

As a named inventor you are entitled to inspect any paper in the file wrapper of the application, order copies of all or any part thereof (at a prepaid cost per 37 CFR 1.19) or make your position of record in the application. Alternatively, you may arrange to do any of the preceding through a registered patent attorney or agent presenting written authorization from you. If you care to join the application, counsel of record (see below) would presumably assist you. Joining in the application would entail the filing of an appropriate oath or declaration by you pursuant to 37 CFR 1.63.

Telephone inquiries regarding this communication should be directed to the undersigned at 703 308-6918. Requests for information regarding your application should be directed to the File Information Unit at (703)308-2733. Information regarding how to pay for and order a copy of the application, or a specific paper in the application, should be directed to Certification Division at (703)308-9726 or 1(800)972-6382 (outside the Washington D.C. area).

DWood

Douglas I. Wood
Senior Petitions Attorney
Office of Petitions
Office of the Deputy Commissioner
for Patent Examination Policy

MILLS & ONELLO, LLP
SUITE 605
ELEVEN BEACON STREET
BOSTON MA 02108

UNITED STATES PATENT AND TRADEMARK OFFICE

Commissioner for Patents
United States Patent and Trademark Office
P.O. Box 1450
Alexandria, VA 22313-1450
www.uspto.gov

MORRIS MANNING & MARTIN LLP
1600 ATLANTA FINANCIAL CENTER
3343 PEACHTREE ROAD, NE
ATLANTA GA 30326-1044

COPY MAILED

FEB 0 4 2005

OFFICE OF PETITIONS

ON PETITION

In re Application of :
Novak et al. :
Application No. 10/122,636 :
Filed: April 15, 2002 :
Attorney Docket No. 4960-3569 :

This is a decision on the petition under 37 CFR 1.137(b), filed December 16, 2004, to revive the above-identified application.

The petition is **GRANTED**.

This application became abandoned on October 24, 2004, for failure to timely pay the proper amount for the issue fee and the publication fee as required by the Notice of Allowance and Fee(s) Due, which set a three (3) month statutory period for reply. A Notice of Abandonment was mailed on November 21, 2004.

This application is being forwarded to the Office of Patent Publication for processing into a patent.

Telephone inquiries concerning the issuance of the application into a patent should be directed to the Office of Patent Publication, Customer Service at (703) 305-8497.

Telephone inquiries specifically concerning this decision should be directed to the undersigned at (571) 272-3211.

Christina Tartera Donnell

Christina Tartera Donnell
Senior Petitions Attorney
Office of Petitions

UNITED STATES PATENT AND TRADEMARK OFFICE

Commissioner for Patents
United States Patent and Trademark Office
P.O. Box 1450
Alexandria, VA 22313-1450
www.uspto.gov

Date : January 5, 2006

Stephen P. Burr
BURR & BROWN
P. O. Box 7068
Syracuse, NY 13261-7068

Patent No: 6968603 B2
Application No.: 10/122658
Applicant: Yukihisa Takeuchi
Issued: November 29, 2005
Title: **METHOD OF PRODUCING A PIEZOELECTRIC/ELECTROSTRICTIVE DEVICE**

Request for Certificate Of Correction:

Consideration has been given to your request for the issuance of a certificate of correction for the above- identified patent under the provisions of Rule 1.322.

Respecting the alleged error on the title page item (54), it is the practice to exclude words such as "**A**", "**IMPROVED**", **IMPROVEMENTS IN**", "**NEW**", **OR** "**NOVEL**", as the first word in the title of the invention. With regards to the error in column 15, line 6. Inspection of the application file reveals it is printed in accordance with the record. There, being no fault on the part of the Patent Office, it has no authority to issue certificate of correction (s) under United States Code of Federal Regulation (C.F.R.) 1.322.

In view of the foregoing, your request in these matters are hereby **denied**.

Further consideration will be given upon receipt of a Request for Reconsideration, which should be directed to Decisions and Certificate of Correction Branch. Requests for Reconsideration should be accompanied by appropriate fee, which is presently $100. Additional support (e.g. copy of amendments, post card receipts, containing requested data or changes) and/or brief statements of facts, as requested, may also be submitted.

Virginia Tolbert
For Cecelia Newman, Supervisor
Decisions and Certificate of Correction
(703) 305-8309 or 305-1882

vt

SPE RESPONSE FOR CERTIFICATE OF CORRECTION

Paper No.: _____

DATE : July 9, 2007

TO SPE OF : ART UNIT 3729

SUBJECT : Request for Certificate of Correction on Patent No.: 6,968,603

A response is requested with respect to the accompanying request for a certificate of correction.

Please complete this form and return with file, within **7** days to:
Palm location **7580, Certificates of Correction Branch – South Tower – 9A22**
If response is for an IFW, **return to employee (named below) via PUBSCofC Team in MADRAS.**
With respect to the change(s) requested, correcting Office and/or Applicant's errors, should the patent read as shown in the certificate of correction (COCIN)? No new matter should be introduced, nor should the scope or meaning of the claims be changed.

Thank You For Your Assistance

Certificates of Correction Branch
Tel. No. 703-308-9309 ext.

The request for issuing the above-identified correction(s) is hereby:
Note your decision on the appropriate box.

- ☒ **Approved** — **All** changes apply.
- ☐ **Approved in Part** — Specify below which changes **do not** apply.
- ☐ **Denied** — State the reasons for denial below.

Comments:

PETER VO
SUPERVISORY PATENT EXAMINER
TECHNOLOGY CENTER 3700
SPE

3729
Art Unit

PTO/SB/66 (03-09)
Approved for use through 03/31/2012. OMB 0651-0016
U.S. Patent and Trademark Office: U.S. DEPARTMENT OF COMMERCE
Under the Paperwork Reduction Act of 1995, no persons are required to respond to a collection of information unless it displays valid OMB control number.

PETITION TO ACCEPT UNINTENTIONALLY DELAYED PAYMENT OF MAINTENANCE FEE IN AN EXPIRED PATENT (37 CFR 1.378(c))

Patent Number	Issue Date (YYYY-MM-DD)	Application Number	Filing Date (YYYY-MM-DD)	Docket Number (if applicable)
6648489	2003-11-18	10122686	2002-04-12	

CAUTION: Maintenance fee (and surcharge, if any) payment must correctly identify: (1) the patent number and (2) the application number of the actual U.S. application leading to issuance of that patent to ensure the fee(s) is/are associated with the correct patent. 37 CFR 1.366(c) and (d).

SMALL ENTITY
☒ Patentee claims, or has previously claimed, small entity status. See 37 CFR 1.27.

LOSS OF ENTITLEMENT TO SMALL ENTITY STATUS
☐ Patentee is no longer entitled to small entity status. See 37 CFR 1.27(g)

NOT Small Entity		Small Entity	
Fee	Code	Fee	Code
○ 3 ½ year	(1551)	◉ 3 ½ year	(2551)
○ 7 ½ year	(1552)	○ 7 ½ year	(2552)
○ 11 ½ year	(1553)	○ 11 ½ year	(2553)

SURCHARGE
The surcharge required by 37 CFR 1.20(i)(2) (Fee Code 1558) must be paid as a condition of accepting unintentionally delayed payment of the maintenance fee.

MAINTENANCE FEE (37 CFR 1.20(e)-(g))
The appropriate maintenance fee must be submitted with this petition.

STATEMENT
THE UNDERSIGNED CERTIFIES THAT THE DELAY IN PAYMENT OF THE MAINTENANCE FEE TO THIS PATENT WAS UNINTENTIONAL

PETITIONER(S) REQUEST THAT THE DELAYED PAYMENT OF THE MAINTENANCE FEE BE ACCEPTED AND THE PATENT REINSTATED

THIS PORTION MUST BE COMPLETED BY THE SIGNATORY OR SIGNATORIES

37 CFR 1.378(d) states: "Any petition under this section must be signed by an attorney or agent registered to practice before the Patent and Trademark Office, or by the patentee, the assignee, or other party in interest."

I certify, in accordance with 37 CFR 1.4(d)(4) that I am

○ An attorney or agent registered to practice before the Patent and Trademark Office

○ A sole patentee

◉ A joint patentee; I certify that I am authorized to sign this submission on behalf of all the other patentees.

○ A joint patentee; all of whom are signing this e-petition

○ The assignee of record of the entire interest

A Joint Patentee and I certify that I am authorized to sign this submission on behalf of all the other patentees			
A signature of the applicant or representative is required in accordance with 37 CFR 1.33 and 10.18. Please see 37 CFR 1.4(d) for the form of the signature.			
Signature	/Ernst W. Fischer/	Date (YYYY-MM-DD)	2009-09-11
Name	Ernst W. Fischer		

This collection of information is required by 37 CFR 1.378(c). The information is required to obtain or retain a benefit by the public which is to file (and by the USPTO to process) an application. Confidentiality is governed by 35 U.S.C. 122 and 37 CFR 1.11 and 1.14. This collection is estimated to take 1 hour to complete, including gathering, preparing, and submitting the completed application form to the USPTO. Time will vary depending upon the individual case. Any comments on the amount of time you require to complete this form and/or suggestions for reducing this burden, should be sent to the Chief Information Officer, U.S. Patent and Trademark Office, U.S. Department of Commerce, P.O. Box 1450, Alexandria, VA 22313-1450. DO NOT SEND FEES OR COMPLETED FORMS TO THIS ADDRESS. **This form can only be used when in conjunction with EFS-Web. If this form is mailed to the USPTO, it may cause delays in reinstating the patent.**

Privacy Act Statement

The Privacy Act of 1974 (P.L. 93-579) requires that you be given certain information in connection with your submission of the attached form related to a patent application or patent. Accordingly, pursuant to the requirements of the Act, please be advised that: (1) the general authority for the collection of this information is 35 U.S.C. 2(b)(2); (2) furnishing of the information solicited is voluntary; and (3) the principal purpose for which the information is used by the U.S. Patent and Trademark Office is to process and/or examine your submission related to a patent application or patent. If you do not furnish the requested information, the U.S. Patent and Trademark Office may not be able to process and/or examine your submission, which may result in termination of proceedings or abandonment of the application or expiration of the patent.

The information provided by you in this form will be subject to the following routine uses:

1. The information on this form will be treated confidentially to the extent allowed under the Freedom of Information Act (5 U.S.C. 552) and the Privacy Act (5 U.S.C. 552a). Records from this system of records may be disclosed to the Department of Justice to determine whether the Freedom of Information Act requires disclosure of these records.

2. A record from this system of records may be disclosed, as a routine use, in the course of presenting evidence to a court, magistrate, or administrative tribunal, including disclosures to opposing counsel in the course of settlement negotiations.

3. A record in this system of records may be disclosed, as a routine use, to a Member of Congress submitting a request involving an individual, to whom the record pertains, when the individual has requested assistance from the Member with respect to the subject matter of the record.

4. A record in this system of records may be disclosed, as a routine use, to a contractor of the Agency having need for the information in order to perform a contract. Recipients of information shall be required to comply with the requirements of the Privacy Act of 1974, as amended, pursuant to 5 U.S.C. 552a(m).

5. A record related to an International Application filed under the Patent Cooperation Treaty in this system of records may be disclosed, as a routine use, to the International Bureau of the World Intellectual Property Organization, pursuant to the Patent Cooperation Treaty.

6. A record in this system of records may be disclosed, as a routine use, to another federal agency for purposes of National Security review (35 U.S.C. 181) and for review pursuant to the Atomic Energy Act (42 U.S.C. 218(c)).

7. A record from this system of records may be disclosed, as a routine use, to the Administrator, General Services, or his/her designee, during an inspection of records conducted by GSA as part of that agency's responsibility to recommend improvements in records management practices and programs, under authority of 44 U.S.C. 2904 and 2906. Such disclosure shall be made in accordance with the GSA regulations governing inspection of records for this purpose, and any other relevant (i.e., GSA or Commerce) directive. Such disclosure shall not be used to make determinations about individuals.

8. A record from this system of records may be disclosed, as a routine use, to the public after either publication of the application pursuant to 35 U.S.C. 122(b) or issuance of a patent pursuant to 35 U.S.C. 151. Further, a record may be disclosed, subject to the limitations of 37 CFR 1.14, as a routine use, to the public if the record was filed in an application which became abandoned or in which the proceedings were terminated and which application is referenced by either a published application, an application open to public inspections or an issued patent.

9. A record from this system of records may be disclosed, as a routine use, to a Federal, State, or local law enforcement agency, if the USPTO becomes aware of a violation or potential violation of law or regulation.

UNITED STATES PATENT AND TRADEMARK OFFICE

Commissioner for Patents
United States Patent and Trademark Office
P.O. Box 1450
Alexandria, VA 22313-1450
www.uspto.gov

In re Patent No. 6648489
Issue Date: November 18,2003
Application No. 10122686
Filed: April 12,2002
Attorney Docket No.

:
:DECISION GRANTING PETITION
:UNDER 37 CFR 1.378(c)
:

This is a decision on the electronic petition, filed September 11,2009 ,under 37 CFR 1.378(c) to accept the unintentionally delayed payment of the 3.5 year maintenance fee for the above-identified patent.

The petition is **GRANTED**.

The maintenance fee is accepted, and the above-identified patent reinstated as of September 11,2009 . This decision also constitutes notice that the fee has been accepted. An electronic copy of the petition and this decision has been created as an entry in the Image File Wrapper. Nevertheless, petitioner should print and retain an independent copy.

Telephone inquiries related to this electronic decision should be directed to the Electronic Business Center at 1-866-217-9197.

UNITED STATES PATENT AND TRADEMARK OFFICE

COMMISSIONER FOR PATENTS
UNITED STATES PATENT AND TRADEMARK OFFICE
WASHINGTON, D.C. 20231
www.uspto.gov
DIW-11-02

Paper No. 5

KLARQUIST SPARKMAN, LLP
ONE WORLD TRADE CENTER
SUITE 1600
121 S.W. SALMON STREET
PORTLAND OR 97204

COPY MAILED

NOV 14 2002

OFFICE OF PETITIONS

In re Application of :
Eglitis, Mezey, and Mouradian : DECISION ACCORDING STATUS
Application No. 10/122,703 : UNDER 37 CFR 1.47(a)
Filed: 11 April, 2002 :
Attorney Docket No. 4239-62620 :

This is in response to the renewed petition under 37 CFR 1.47(a)[1] filed on 6 September, 2002.

The petition is **GRANTED**.

Petitioners have shown that the non-signing inventor, Martin A. Eglitis, has refused to join in the filing of the above-identified application after having been sent a copy of the application papers. Specifically, petitioners have supplied a copy of the letter transmitting a copy of the application papers to Eglitis. Eglitis has failed, however, to sign and return the declaration naming him as a joint inventor along with Eva Mezey and Mary Maral Mouradian.

The above-identified application and papers have been reviewed and found in compliance with 37 CFR 1.47(a). This application is hereby accorded Rule 1.47(a) status.

As provided in Rule 1.47(c), this Office will forward notice of this application's filing to the non-signing inventor at the address given in the declaration. Notice of the filing of this application will also be published in the Official Gazette.

---

[1] A grantable petition under 37 CFR 1.47(a) requires:

(1) proof that the non-signing inventor cannot be reached or refuses to sign the oath or declaration after having been presented with the application papers (specification, claims and drawings);

(2) an acceptable oath or declaration in compliance with 35 U.S.C. §§ 115 and 116;

(3) the petition fee; and

(4) a statement of the last known address of the non-signing inventor.

The application is being forwarded to Technology Center 1600 for further processing.

Telephone inquiries related to this decision should be directed to the undersigned at 703-308-6918.

Douglas I. Wood
Senior Petitions Attorney
Office of Petitions
Office of the Deputy Commissioner
for Patent Examination Policy

PTO/SB/66 (03-09)
Approved for use through 03/31/2012. OMB 0651-0016
U.S. Patent and Trademark Office: U.S. DEPARTMENT OF COMMERCE
Under the Paperwork Reduction Act of 1995, no persons are required to respond to a collection of information unless it displays valid OMB control number.

PETITION TO ACCEPT UNINTENTIONALLY DELAYED PAYMENT OF MAINTENANCE FEE IN AN EXPIRED PATENT (37 CFR 1.378(c))

Patent Number	Issue Date (YYYY-MM-DD)	Application Number	Filing Date (YYYY-MM-DD)	Docket Number (if applicable)
6898215	2005-05-24	10122707	2002-04-11	O013 P00827-US1

CAUTION: Maintenance fee (and surcharge, if any) payment must correctly identify: (1) the patent number and (2) the application number of the actual U.S. application leading to issuance of that patent to ensure the fee(s) is/are associated with the correct patent. 37 CFR 1.366(c) and (d).

SMALL ENTITY
☐ Patentee claims, or has previously claimed, small entity status. See 37 CFR 1.27.

LOSS OF ENTITLEMENT TO SMALL ENTITY STATUS
☐ Patentee is no longer entitled to small entity status. See 37 CFR 1.27(g)

NOT Small Entity		Small Entity	
Fee	Code	Fee	Code
◉ 3 ½ year	(1551)	○ 3 ½ year	(2551)
○ 7 ½ year	(1552)	○ 7 ½ year	(2552)
○ 11 ½ year	(1553)	○ 11 ½ year	(2553)

SURCHARGE
The surcharge required by 37 CFR 1.20(i)(2) (Fee Code 1558) must be paid as a condition of accepting unintentionally delayed payment of the maintenance fee.

MAINTENANCE FEE (37 CFR 1.20(e)-(g))
The appropriate maintenance fee must be submitted with this petition.

STATEMENT
THE UNDERSIGNED CERTIFIES THAT THE DELAY IN PAYMENT OF THE MAINTENANCE FEE TO THIS PATENT WAS UNINTENTIONAL

PETITIONER(S) REQUEST THAT THE DELAYED PAYMENT OF THE MAINTENANCE FEE BE ACCEPTED AND THE PATENT REINSTATED

THIS PORTION MUST BE COMPLETED BY THE SIGNATORY OR SIGNATORIES

37 CFR 1.378(d) states: "Any petition under this section must be signed by an attorney or agent registered to practice before the Patent and Trademark Office, or by the patentee, the assignee, or other party in interest."

I certify, in accordance with 37 CFR 1.4(d)(4) that I am

◉ An attorney or agent registered to practice before the Patent and Trademark Office

○ A sole patentee

○ A joint patentee; I certify that I am authorized to sign this submission on behalf of all the other patentees.

○ A joint patentee; all of whom are signing this e-petition

○ The assignee of record of the entire interest

Patent Practitioner			
A signature of the applicant or representative is required in accordance with 37 CFR 1.33 and 10.18. Please see 37 CFR 1.4(d) for the form of the signature			
Signature	/stephen j. holmes/	Date (YYYY-MM-DD)	2010-05-26
Name	Stephen Holmes	Registration Number	34621

This collection of information is required by 37 CFR 1.378(c). The information is required to obtain or retain a benefit by the public which is to file (and by the USPTO to process) an application. Confidentiality is governed by 35 U.S.C. 122 and 37 CFR 1.11 and 1.14. This collection is estimated to take 1 hour to complete, including gathering, preparing, and submitting the completed application form to the USPTO. Time will vary depending upon the individual case. Any comments on the amount of time you require to complete this form and/ or suggestions for reducing this burden, should be sent to the Chief Information Officer, U.S. Patent and Trademark Office, U.S. Department of Commerce, P.O. Box 1450, Alexandria, VA 22313-1450. DO NOT SEND FEES OR COMPLETED FORMS TO THIS ADDRESS. **This form can only be used when in conjunction with EFS-Web. If this form is mailed to the USPTO, it may cause delays in reinstating the patent.**

Privacy Act Statement

The Privacy Act of 1974 (P.L. 93-579) requires that you be given certain information in connection with your submission of the attached form related to a patent application or patent. Accordingly, pursuant to the requirements of the Act, please be advised that: (1) the general authority for the collection of this information is 35 U.S.C. 2(b)(2); (2) furnishing of the information solicited is voluntary; and (3) the principal purpose for which the information is used by the U.S. Patent and Trademark Office is to process and/or examine your submission related to a patent application or patent. If you do not furnish the requested information, the U.S. Patent and Trademark Office may not be able to process and/or examine your submission, which may result in termination of proceedings or abandonment of the application or expiration of the patent.

The information provided by you in this form will be subject to the following routine uses:

1. The information on this form will be treated confidentially to the extent allowed under the Freedom of Information Act (5 U.S.C. 552) and the Privacy Act (5 U.S.C. 552a). Records from this system of records may be disclosed to the Department of Justice to determine whether the Freedom of Information Act requires disclosure of these records.

2. A record from this system of records may be disclosed, as a routine use, in the course of presenting evidence to a court, magistrate, or administrative tribunal, including disclosures to opposing counsel in the course of settlement negotiations.

3. A record in this system of records may be disclosed, as a routine use, to a Member of Congress submitting a request involving an individual, to whom the record pertains, when the individual has requested assistance from the Member with respect to the subject matter of the record.

4. A record in this system of records may be disclosed, as a routine use, to a contractor of the Agency having need for the information in order to perform a contract. Recipients of information shall be required to comply with the requirements of the Privacy Act of 1974, as amended, pursuant to 5 U.S.C. 552a(m).

5. A record related to an International Application filed under the Patent Cooperation Treaty in this system of records may be disclosed, as a routine use, to the International Bureau of the World Intellectual Property Organization, pursuant to the Patent Cooperation Treaty.

6. A record in this system of records may be disclosed, as a routine use, to another federal agency for purposes of National Security review (35 U.S.C. 181) and for review pursuant to the Atomic Energy Act (42 U.S.C. 218(c)).

7. A record from this system of records may be disclosed, as a routine use, to the Administrator, General Services, or his/her designee, during an inspection of records conducted by GSA as part of that agency's responsibility to recommend improvements in records management practices and programs, under authority of 44 U.S.C. 2904 and 2906. Such disclosure shall be made in accordance with the GSA regulations governing inspection of records for this purpose, and any other relevant (i.e., GSA or Commerce) directive. Such disclosure shall not be used to make determinations about individuals.

8. A record from this system of records may be disclosed, as a routine use, to the public after either publication of the application pursuant to 35 U.S.C. 122(b) or issuance of a patent pursuant to 35 U.S.C. 151. Further, a record may be disclosed, subject to the limitations of 37 CFR 1.14, as a routine use, to the public if the record was filed in an application which became abandoned or in which the proceedings were terminated and which application is referenced by either a published application, an application open to public inspections or an issued patent.

9. A record from this system of records may be disclosed, as a routine use, to a Federal, State, or local law enforcement agency, if the USPTO becomes aware of a violation or potential violation of law or regulation.

UNITED STATES PATENT AND TRADEMARK OFFICE

Commissioner for Patents
United States Patent and Trademark Office
P.O. Box 1450
Alexandria, VA 22313-1450
www.uspto.gov

In re Patent No. 6898215
Issue Date: May 24,2005
Application No. 10122707
Filed: April 11,2002
Attorney Docket No. 48227/PAN/C715/CLO166.2

:DECISION GRANTING PETITION
:UNDER 37 CFR 1.378(c)

This is a decision on the electronic petition, filed May 26,2010 ,under 37 CFR 1.378(c) to accept the unintentionally delayed payment of the 3.5 year maintenance fee for the above-identified patent.

The petition is **GRANTED**.

The maintenance fee is accepted, and the above-identified patent reinstated as of May 26,2010 .
This decision also constitutes notice that the fee has been accepted. An electronic copy of the petition and this decision has been created as an entry in the Image File Wrapper. Nevertheless, petitioner should print and retain an independent copy.

Telephone inquiries related to this electronic decision should be directed to the Electronic Business Center at 1-866-217-9197.

UNITED STATES PATENT AND TRADEMARK OFFICE

COMMISSIONER FOR PATENTS
UNITED STATES PATENT AND TRADEMARK OFFICE
P.O. BOX 1450
ALEXANDRIA, VA 22313-1450
WWW.USPTO.GOV

Paper No. None

SHOOK, HARDY & BACON L.L.P.
Intellectual Property Department
2555 GRAND BOULEVARD
KANSAS CITY MO 64108-2613

COPY MAILED
AUG 28 2006
OFFICE OF PETITIONS

In re Application of :
Andrea Califano et al. :
Application No. 10/122,711 : DECISION ON PETITION
Filed: April 15, 2002 : UNDER 37 C.F.R. §1.137(B)
Attorney Docket No.: FGTI- :
P01-001 :
Title: METHODS AND SYSTEMS :
FOR MANAGING INFORMED :
CONSENT PROCESSES :

This is a decision on the petition filed May 30, 2006, pursuant to 37 C.F.R. §1.137(b)[1], to revive the above-identified application.

The above-identified application became abandoned for failure to reply in a timely manner to the non-final Office action, mailed November 22, 2005, which set a shortened statutory period for reply of three months. No response was received, and no extensions of time under the provisions of 37 C.F.R. §1.136(a)

---

1 A grantable petition pursuant to 37 C.F.R. 1.137(b) must be accompanied by:
(1) The reply required to the outstanding Office action or notice, unless previously filed;
(2) The petition fee as set forth in § 1.17(m);
(3) A statement that the entire delay in filing the required reply from the due date for the reply until the filing of a grantable petition pursuant to this paragraph was unintentional. The Commissioner may require additional information where there is a question whether the delay was unintentional, and;
(4) Any terminal disclaimer (and fee as set forth in § 1.20(d)) required pursuant to paragraph (d) of this section.

were requested. Accordingly, the above-identified application became abandoned on February 23, 2006.

With the present petition, Petitioner has submitted the petition fee and the proper statement of unintentional delay. Petitioner has met requirements (2) and (3) of 37 C.F.R. §1.137(b). It is noted that a terminal disclaimer is not required.

Regarding the first requirement, it does not appear that a response to the non-final Office action has been submitted.

On May 24, 2006, a Revocation of Power of Attorney with New Power of Attorney and Change of Correspondence Address was received, along with a three-month extension of time. However, this submission was received subsequent to the maximum extendable period of time (which expired on May 22, 2006). Neither submission contained a certificate of mailing. An extension of time under 37 C.F.R. §1.136 must be filed prior to the expiration of the maximum extendable period for reply[2]. Accordingly, since the $1,020 extension of time submitted on May 24, 2006 was subsequent to the maximum extendable period for reply, this fee is unnecessary and will be credited to Petitioner's deposit account.

With this petition, Petitioner has indicated that the reply has been previously filed, by way of "petition for 3-month Ext. of Time under 37 C.F.R. §1.136(a)…05/22/06 without Certificate of Mailing dated 5/22/06."

The extension of time, even if it had been timely submitted, cannot constitute the required reply to the Office action. An extension of time can be used to obtain additional time to submit a response to an Office communication, however it cannot serve as the response itself. The required reply is the reply sufficient to have avoided abandonment, had such reply been timely filed[3]. In order for the application to be revived, petitioner must submit a reply which satisfies 37 C.F.R. §1.137(b)(1) (i.e., an amendment, a request for reconsideration, or a continuing application). Neither the submission of May 24, 2006 nor the present petition appears to have been accompanied by any of these replies.

As such, this petition under 37 C.F.R. §1.137(b) is **DISMISSED**.

---

2 See In re Application of S., 8 USPQ2d 1630, 1631 (Comm'r Pats. 1988).
3 See M.P.E.P. 711.03(c).

Any reply must be submitted within **TWO (2) MONTHS** from the mail date of this decision. Extensions of time under 37 C.F.R. §1.136(a) are permitted. The reply should include a cover letter entitled "Renewed Petition Under 37 C.F.R. 1.137(b)." This is not a final agency action within the meaning of 5 U.S.C 704.

The renewed petition should indicate in a prominent manner that the attorney handling this matter is Paul Shanoski, and may be submitted by mail[4], hand-delivery[5], or facsimile[6].

The Revocation of Power of Attorney with New Power of Attorney and Change of Correspondence Address has been entered and made of record.

Telephone inquiries regarding *this decision* should be directed to the undersigned at (571) 272-3225. All other inquiries concerning examination procedures or status of the application should be directed to the Technology Center.

Paul Shanoski
Senior Attorney
Office of Petitions
United States Patent and Trademark Office

---

4 Mail Stop Petition, Commissioner for Patents, United States Patent and Trademark Office, P.O. Box 1450, Alexandria, VA, 22313-1450.
5 Customer Window, Randolph Building, 401 Dulaney Street, Alexandria, VA, 22314.
6 (571) 273-8300- please note this is a central facsimile number.

UNITED STATES PATENT AND TRADEMARK OFFICE

COMMISSIONER FOR PATENTS
UNITED STATES PATENT AND TRADEMARK OFFICE
P.O. BOX 1450
ALEXANDRIA, VA 22313-1450
WWW.USPTO.GOV

Paper No. None

SHOOK, HARDY & BACON L.L.P.
Intellectual Property Department
2555 GRAND BOULEVARD
KANSAS CITY MO 64108-2613

COPY MAILED
NOV 1 3 2006
OFFICE OF PETITIONS

In re Application of Andrea Califano et al. Application No. 10/122,711 Filed: April 15, 2002 Attorney Docket No.: FGTI-P01-001 Title: METHODS AND SYSTEMS FOR MANAGING INFORMED CONSENT PROCESSES	DECISION ON RENEWED PETITION UNDER 37 C.F.R. §1.137(B)

This is a decision on the renewed petition filed October 27, 2006, pursuant to 37 C.F.R. §1.137(b)[1], to revive the above-identified application.

The above-identified application became abandoned for failure to reply in a timely manner to the non-final Office action, mailed November 22, 2005, which set a shortened statutory period for reply of three months. No response was received, and no extensions of time under the provisions of 37 C.F.R. §1.136(a)

1 A grantable petition pursuant to 37 C.F.R. 1.137(b) must be accompanied by:
(1) The reply required to the outstanding Office action or notice, unless previously filed;
(2) The petition fee as set forth in § 1.17(m);
(3) A statement that the entire delay in filing the required reply from the due date for the reply until the filing of a grantable petition pursuant to this paragraph was unintentional. The Commissioner may require additional information where there is a question whether the delay was unintentional, and;
(4) Any terminal disclaimer (and fee as set forth in § 1.20(d)) required pursuant to paragraph (d) of this section.

were requested. Accordingly, the above-identified application became abandoned on February 23, 2006.

The original petition was submitted on May 30, 2006, along with the petition fee and the proper statement of unintentional delay. The original petition was dismissed via the mailing of a decision on August 28, 2006 for failure to include a response to the non-final Office action.

With this renewed petition, Petitioner has indicated that a continuation application was filed on May 22, 2006.

Since this application is being revived for purposes of continuity only and since continuity has been established by this decision reviving the application, the application is again abandoned in favor of continuing Application No. 11/438,677.

With this renewed petition, Petitioner has again submitted a three-month extension of time. As set forth in the decision on the original petition, **an extension of time under 37 C.F.R. §1.136 must be filed prior to the expiration of the maximum extendable period for reply**[2]. Accordingly, since the $1,020 extension of time submitted with this renewed petition was received subsequent to the maximum extendable period for reply, this fee is unnecessary and will be credited to Petitioner's deposit account.

Telephone inquiries regarding *this decision* should be directed to the undersigned at (571) 272-3225. All other inquiries concerning examination procedures or status of the application should be directed to the Technology Center.

Paul Shanoski
Senior Attorney
Office of Petitions
United States Patent and Trademark Office

2 See In re Application of S., 8 USPQ2d 1630, 1631 (Comm'r Pats. 1988).

SPE RESPONSE FOR CERTIFICATE OF CORRECTION

Paper No.: _____

DATE : Mar. 15, 2006

TO SPE OF : ART UNIT 3728 (Mickey Yu)

SUBJECT : Request for Certificate of Correction on Patent No.: 6,991,099

A response is requested with respect to the accompanying request for a certificate of correction. This response is for an IFW application, **please send this form with your decision - to be scanned into the IFW contents as DOC CODE: COCX**.

then return a message in MADRAS to Team: PUBSCofC, User: employee (named below). Please complete this form and have it scanned, within 7 days.

With respect to the change(s) requested, correcting Office and/or Applicant's errors, should the patent read as shown in the certificate of correction (COCIN)? No new matter should be introduced, nor should the scope or meaning of the claims be changed.

Please see changes to amended claims, and the request for claim re-numbering. Your denial or approval decision is needed below.

sp STM STACY POWELL

Thank You For Your Assistance

Certificates of Correction Branch

Tel. No. 703-308-9390 x120

The request for issuing the above-identified correction(s) is hereby:

Note your decision on the appropriate box.

- ☐ **Approved** — **All** changes apply.
- ☒ **Approved in Part** — Specify below which changes **do not** apply.
- ☐ **Denied** — State the reasons for denial below.

Comments:

The amendment to claims 7-18 will not be approved. The dependencies are correct, the claims submitted on 8/12/05 has claims 26, 28, 35, 36, 37 depend directly from claim 24. The examiner renumbered claims 28-33 first before claims 26, 27 & 34. But because they are all depending upon claim 24, it does not matter whether claim 28 is directly behind claim 24 or 26 is directly behind 24. In addition, new claim 17 cannot be changed to claim 15 b/c it depends from new claim 15 or original claim 26 filed on 8/12/05

SPE _____ Art Unit 3728

PTOL-306 (REV. 7/03) U.S. DEPARTMENT OF COMMERCE Patent and Trad mark Office

UNITED STATES PATENT AND TRADEMARK OFFICE

Commissioner for Patents
United States Patent and Trademark Office
P.O. Box 1450
Alexandria, VA 22313-1450
www.uspto.gov

Paper No. 11

FITZPATRICK CELLA HARPER & SCINTO
30 ROCKEFELLER PLAZA
NEW YORK NY 10112

COPY MAILED

JUN 2 3 2004

OFFICE OF PETITIONS

In re Application of	:
Hayao Ohzu et al	: DECISION ON PETITION
Application No. 10/122,722	: UNDER 37 CFR 1.78(a)(3)
Filed: April 16, 2002	:
Attorney Docket No. 03500.004756.10	:

This is a decision on the petition under 37 CFR 1.78(a)(3), filed September 5, 2003, to accept an unintentionally delayed claim under 35 U.S.C. §120 for the benefit of the prior-filed nonprovisional application set forth in the amendment filed concurrently with the instant petition.

The petition is **DISMISSED**.

A petition for acceptance of a claim for late priority under 37 CFR 1.78(a)(3) is only applicable to those applications filed on or after November 29, 2000. Further, the petition is appropriate only after the expiration of the period specified in 37 CFR 1.78(a)(2)(ii). In addition, the petition under 37 CFR 1.78(a)(3) must be accompanied by:

> **(1)** the reference required by 35 U.S.C. § 120 and 37 CFR 1.78(a)(2)(i) of the prior-filed application, unless previously submitted;[1]
> **(2)** the surcharge set forth in § 1.17(t); and
> **(3)** a statement that the entire delay between the date the claim was due under 37 CFR 1.78(a)(2)(ii) and the date the claim was filed was unintentional. The Commissioner may require additional information where there is a question whether the delay was unintentional.

---

[1] Any nonprovisional application or international application designating the United States of America claiming the benefit of one or more prior-filed copending applications or international applications designating the United States of America must contain or be amended to contain a reference (amendment to the first line of the specification following the title or in an application data sheet (ADS)) to each such prior-filed application, identifying it by application number (consisting of the series code and serial number) or international application number and international filing date filing date and indicating the relationship of the applications. Cross references to other related applications may be made when appropriate (*see* § 1.14).

The instant petition does not comply with item (1).

The amendment filed September 5, 2003, states that Application No. 07/314,275 is a continuation of Application No. 07/460,012, filed January 2, 1990. However, Application No. 07/314,275, was filed on February 23, 1989 which is prior to the filing of Application No. 07/460,012. Therefore, Application No. 07/314,275 can not be a continuation of Application No. 07/460,012.

Accordingly, before the petition under 37 CFR § 1.78(a)(3) can be granted, a renewed petition under 37 CFR § 1.78(a)(3) and a substitute amendment correcting the above matter is required.

Further correspondence with respect to this matter should be addressed as follows:

By mail: Mail Stop PETITIONS
Commissioner for Patents
Post Office Box 1450
Alexandria, VA 22313-1450

By hand: Customer Window located at:

2011 South Clark Place
Crystal Plaza Two Lobby
Room 1B03
Arlington, VA 22202

By fax: (703) 872-9306
ATTN: Office of Petitions

Any questions concerning this matter may be directed to the undersigned at (703) 305-8859 .

Karen Creasy

Karen Creasy
Petitions Examiner
Office of Petitions
Office of the Deputy Commissioner
for Patent Examination Policy

UNITED STATES PATENT AND TRADEMARK OFFICE

Commissioner for Patents
United States Patent and Trademark Office
P.O. Box 1450
Alexandria, VA 22313-1450
www.uspto.gov

Paper No.13

FITZPATRICK CELLA HARPER & SCINTO
30 ROCKEFELLER PLAZA
NEW YORK NY 10112

COPY MAILED

JUL 0 7 2004

OFFICE OF PETITIONS

In re Application of
Hayao Ohzu et al
Application No. 10/122,722
Filed: April 16, 2002
Attorney Docket No. 03500.004756.10

: DECISION ON PETITION
: UNDER 37 CFR 1.78(a)(3)

This is a corrected decision on the petition under 37 CFR 1.78(a)(3), filed September 5, 2003, to accept an unintentionally delayed claim under 35 U.S.C. § 120 for the benefit of priority to the prior-filed nonprovisional application set forth in the amendment filed concurrently with the instant petition.

The petition is **GRANTED**.

A petition for acceptance of a claim for late priority under 37 CFR 1.78(a)(3) is only applicable to those applications filed on or after November 29, 2000. Further, the petition is appropriate only after the expiration of the period specified in 37 CFR 1.78(a)(2)(ii). In addition, the petition under 37 CFR 1.78(a)(3) must be accompanied by:

> **(1)** the reference required by 35 U.S.C. § 120 and 37 CFR 1.78(a)(2)(i) of the prior-filed application, unless previously submitted;[1]
> **(2)** the surcharge set forth in § 1.17(t); and
> **(3)** a statement that the entire delay between the date the claim was due under 37 CFR 1.78(a)(2)(ii) and the date the claim was filed was unintentional. The Commissioner may require additional information where there is a question whether the delay was unintentional.

---

[1] Any nonprovisional application or international application designating the United States of America claiming the benefit of one or more prior-filed copending applications or international applications designating the United States of America must contain or be amended to contain a reference (amendment to the first line of the specification following the title or in an application data sheet (ADS) to each such prior-filed application, identifying it by application number (consisting of the series code and serial number) or international application number and international filing date filing date and indicating the relationship of the applications. Cross references to other related applications may be made when appropriate (*see* § 1.14).

The instant pending application was filed on April 16, 2002, and was pending at the time of filing of the instant petition. A reference to the prior-filed nonprovisional application has been included in an amendment to the first sentence of the specification following the title, as required by 37 CFR 1.78(a)(2)(iii).

The instant nonprovisional application was filed after November 29, 2000, and the claim herein for the benefit of priority to the prior-filed nonprovisional application is submitted after expiration of the period specified in 37 CFR 1.78(a)(2)(ii). Also, the reference to the prior-filed nonprovisional application was submitted during the pendency of the instant nonprovisional application, for which the claim for benefit of priority is sought. *See* 35 U.S.C. § 120. Accordingly, having found that the instant petition for acceptance of an unintentionally delayed claim for the benefit of priority under 35 U.S.C. § 120 to the prior-filed nonprovisional application satisfies the conditions of 37 CFR 1.78(a)(3), the petition is granted.

The granting of the petition to accept the delayed benefit claim to the prior-filed application under 37 CFR 1.78(a)(3) should not be construed as meaning that the instant application is entitled to the benefit of the prior-filed application. In order for the instant application to be entitled to the benefit of the prior-filed application, all other requirements under 35 U.S.C. § 120 and 37 CFR 1.78(a)(1) and (a)(2) must be met. Similarly, the fact that the corrected Filing Receipt accompanying this decision on petition includes the prior-filed application should not be construed as meaning that applicant is entitled to the claim for benefit of priority to the prior-filed application noted thereon. Accordingly, the examiner will, in due course, consider this benefit claim and determine whether the instant application is entitled to the benefit of the earlier filing date.

A corrected Filing Receipt, which includes the priority claim to the prior-filed nonprovisional application, accompanies this decision on petition.

Further, the Office letter mailed June 23, 2004 is hereby **vacated**.

Any inquiries concerning this decision may be directed to the undersigned at (703) 305-8859.

This application is being forwarded to Technology Center Art Unit 2612 for consideration by the examiner of applicant's entitlement to claim benefit of priority under 35 U.S.C. § 120 to prior-filed nonprovisional Application No. 08/237,046, filed July 15, 1994.

Karen Creasy

Karen Creasy
Petitions Examiner
Office of Petitions
Office of the Deputy Commissioner
for Patent Examination Policy

ATTACHMENT: Corrected Filing Receipt

UNITED STATES PATENT AND TRADEMARK OFFICE

COMMISSIONER FOR PATENTS
UNITED STATES PATENT AND TRADEMARK OFFICE
P.O. BOX 1450
ALEXANDRIA, VA 22313-1450
www.uspto.gov

NIRO SCAVONE HALLER & NIRO
181 WEST MADISON STREET
SUITE 4600
CHICAGO, IL 60602

COPY MAILED
FEB 10 2004
OFFICE OF PETITIONS

In re Application of	:
Colin Duffy	:
Application No. 10/122,747	: DECISION GRANTING PETITION
Filed: September 6, 2002	: UNDER 37 CFR 1.47(b)
For: POWERED OSCILLATING HAND TOOL	:
	:

This is in response to the "Petition Under 37 CFR 1.47(b)," filed January 15, 2004.

The petition is granted.

Petitioner has shown that the non-signing inventor has refused to join in the filing of the above-identified application after having been presented with the application papers. Specifically, statements of facts of Bruce S. Shapiro and declaration by Kevin Hewitt establish that the inventor was mailed the application papers, including the specification, claims and drawings, but refused the request that he sign the declaration. In addition, petitioner has shown that Black & Decker, Inc. has a proprietary interest in the above-identified application with the assignment document. The petition fee has been paid charged to petitioner's deposit account. Lastly, petitioner has submitted a declaration in compliance with 37 CFR 1.63 and 1.64 and demonstrated that petitioner has shown that such action is necessary to prevent irreparable damage.

This application and papers have been reviewed and found in compliance with 37 CFR 1.47(b). This application is hereby accorded Rule 1.47(b) status under Rule 1.47(b).

As provided in Rule 1.47(b), this Office will forward notice of this application's filing to the non-signing inventor at the address given in the Declaration. Notice of the filing of this application will also be published in the Official Gazette.

The application will be forwarded to the Office of Initial Patent Examination for further processing.

Telephone inquiries regarding this communication should be directed to the undersigned at (703)306-9200

Edward J. Tannouse
Petitions Attorney
Office of Petitions
United States Patent and Trademark Office

UNITED STATES PATENT AND TRADEMARK OFFICE

COMMISSIONER FOR PATENTS
UNITED STATES PATENT AND TRADEMARK OFFICE
WASHINGTON, D.C. 20231
www.uspto.gov

Paper No. 5

LEXMARK INTERNATIONAL, INC.
INTELLECTUAL PROPERTY LAW DEPT.
740 WEST NEW CIRCLE ROAD
BLDG. 082-1
LEXINGTON, KY 40550

COPY MAILED

APR 2 2 2003

OFFICE OF PETITIONS

In re Application of	:	
Han, et al.	:	
Application No. 10/122,748	:	ON PETITION
Filed: April 15, 2002	:	
Attorney Docket No. 2001-0775.02	:	

This is a decision on the petition under 37 CFR 1.137(b), filed April 8, 2003, to revive the above-identified application.

The petition is **GRANTED**.

The above-identified application became abandoned for failure to reply in a timely manner to the Notice to File Corrected Application Papers (Notice) mailed June 3, 2002. The Notice set a period for reply of two (2) months from the mail date of the Notice. No extensions of time under the provisions of 37 CFR 1.136(a) were obtained. Accordingly, the above-identified application became abandoned on August 4, 2002.

The file is being forwarded to the Office of Initial Patent Examination for further processing.

Telephone inquiries concerning this matter may be directed to the undersigned at (703) 306-9200.

Edward J. Tannouse
Petitions Attorney
Office of Petitions
United States Patent and Trademark Office

Under the Paperwork Reduction Act of 1995, no persons are required to respond to a collection of information unless it displays valid OMB control number.

PETITION TO ACCEPT UNINTENTIONALLY DELAYED PAYMENT OF MAINTENANCE FEE IN AN EXPIRED PATENT (37 CFR 1.378(c))

Patent Number	Issue Date (YYYY-MM-DD)	Application Number	Filing Date (YYYY-MM-DD)	Docket Number (if applicable)
6723110	2004-04-20	10122754	2002-04-15	

CAUTION: Maintenance fee (and surcharge, if any) payment must correctly identify: (1) the patent number and (2) the application number of the actual U.S. application leading to issuance of that patent to ensure the fee(s) is/are associated with the correct patent. 37 CFR 1.366(c) and (d).

SMALL ENTITY
☒ Patentee claims, or has previously claimed, small entity status. See 37 CFR 1.27.

LOSS OF ENTITLEMENT TO SMALL ENTITY STATUS
☐ Patentee is no longer entitled to small entity status. See 37 CFR 1.27(g)

NOT Small Entity		Small Entity	
Fee	Code	Fee	Code
○ 3 ½ year	(1551)	◉ 3 ½ year	(2551)
○ 7 ½ year	(1552)	○ 7 ½ year	(2552)
○ 11 ½ year	(1553)	○ 11 ½ year	(2553)

SURCHARGE
The surcharge required by 37 CFR 1.20(i)(2) (Fee Code 1558) must be paid as a condition of accepting unintentionally delayed payment of the maintenance fee.

MAINTENANCE FEE (37 CFR 1.20(e)-(g))
The appropriate maintenance fee must be submitted with this petition.

STATEMENT
THE UNDERSIGNED CERTIFIES THAT THE DELAY IN PAYMENT OF THE MAINTENANCE FEE TO THIS PATENT WAS UNINTENTIONAL

PETITIONER(S) REQUEST THAT THE DELAYED PAYMENT OF THE MAINTENANCE FEE BE ACCEPTED AND THE PATENT REINSTATED

THIS PORTION MUST BE COMPLETED BY THE SIGNATORY OR SIGNATORIES

37 CFR 1.378(d) states: "Any petition under this section must be signed by an attorney or agent registered to practice before the Patent and Trademark Office, or by the patentee, the assignee, or other party in interest."

I certify, in accordance with 37 CFR 1.4(d)(4) that I am

◉ An attorney or agent registered to practice before the Patent and Trademark Office

○ A sole patentee

○ A joint patentee; I certify that I am authorized to sign this submission on behalf of all the other patentees.

○ A joint patentee; all of whom are signing this e-petition

○ The assignee of record of the entire interest

Patent Practitioner			
A signature of the applicant or representative is required in accordance with 37 CFR 1.33 and 10.18. Please see 37 CFR 1.4(d) for the form of the signature			
Signature	/Peter T. Rasche/	Date (YYYY-MM-DD)	2008-06-23
Name	Peter T. Rasche	Registration Number	57527

This collection of information is required by 37 CFR 1.378(c). The information is required to obtain or retain a benefit by the public which is to file (and by the USPTO to process) an application. Confidentiality is governed by 35 U.S.C. 122 and 37 CFR 1.11 and 1.14. This collection is estimated to take 1 hour to complete, including gathering, preparing, and submitting the completed application form to the USPTO. Time will vary depending upon the individual case. Any comments on the amount of time you require to complete this form and/ or suggestions for reducing this burden, should be sent to the Chief Information Officer, U.S. Patent and Trademark Office, U.S. Department of Commerce, P.O. Box 1450, Alexandria, VA 22313-1450. DO NOT SEND FEES OR COMPLETED FORMS TO THIS ADDRESS. **This form can only be used when in conjunction with EFS-Web. If this form is mailed to the USPTO, it may cause delays in reinstating the patent.**

Privacy Act Statement

The Privacy Act of 1974 (P.L. 93-579) requires that you be given certain information in connection with your submission of the attached form related to a patent application or patent. Accordingly, pursuant to the requirements of the Act, please be advised that: (1) the general authority for the collection of this information is 35 U.S.C. 2(b)(2); (2) furnishing of the information solicited is voluntary; and (3) the principal purpose for which the information is used by the U.S. Patent and Trademark Office is to process and/or examine your submission related to a patent application or patent. If you do not furnish the requested information, the U.S. Patent and Trademark Office may not be able to process and/or examine your submission, which may result in termination of proceedings or abandonment of the application or expiration of the patent.

The information provided by you in this form will be subject to the following routine uses:

1. The information on this form will be treated confidentially to the extent allowed under the Freedom of Information Act (5 U.S.C. 552) and the Privacy Act (5 U.S.C. 552a). Records from this system of records may be disclosed to the Department of Justice to determine whether the Freedom of Information Act requires disclosure of these record s.

2. A record from this system of records may be disclosed, as a routine use, in the course of presenting evidence to a court, magistrate, or administrative tribunal, including disclosures to opposing counsel in the course of settlement negotiations.

3. A record in this system of records may be disclosed, as a routine use, to a Member of Congress submitting a request involving an individual, to whom the record pertains, when the individual has requested assistance from the Member with respect to the subject matter of the record.

4. A record in this system of records may be disclosed, as a routine use, to a contractor of the Agency having need for the information in order to perform a contract. Recipients of information shall be required to comply with the requirements of the Privacy Act of 1974, as amended, pursuant to 5 U.S.C. 552a(m).

5. A record related to an International Application filed under the Patent Cooperation Treaty in this system of records may be disclosed, as a routine use, to the International Bureau of the World Intellectual Property Organization, pursuant to the Patent Cooperation Treaty.

6. A record in this system of records may be disclosed, as a routine use, to another federal agency for purposes of National Security review (35 U.S.C. 181) and for review pursuant to the Atomic Energy Act (42 U.S.C. 218(c)).

7. A record from this system of records may be disclosed, as a routine use, to the Administrator, General Services, or his/her designee, during an inspection of records conducted by GSA as part of that agency's responsibility to recommend improvements in records management practices and programs, under authority of 44 U.S.C. 2904 and 2906. Such disclosure shall be made in accordance with the GSA regulations governing inspection of records for this purpose, and any other relevant (i.e., GSA or Commerce) directive. Such disclosure shall not be used to make determinations about individuals.

8. A record from this system of records may be disclosed, as a routine use, to the public after either publication of the application pursuant to 35 U.S.C. 122(b) or issuance of a patent pursuant to 35 U.S.C. 151. Further, a record may be disclosed, subject to the limitations of 37 CFR 1.14, as a routine use, to the public if the record was filed in an application which became abandoned or in which the proceedings were terminated and which application is referenced by either a published application, an application open to public inspections or an issued patent.

9. A record from this system of records may be disclosed, as a routine use, to a Federal, State, or local law enforcement agency, if the USPTO becomes aware of a violation or potential violation of law or regulation.

UNITED STATES PATENT AND TRADEMARK OFFICE

Commissioner for Patents
United States Patent and Trademark Office
P.O. Box 1450
Alexandria, VA 22313-1450
www.uspto.gov

In re Patent No. 6723110
Issue Date: April 20,2004
Application No. 10122754
Filed: April 15,2002
Attorney Docket No.

:
:DECISION GRANTING PETITION
:UNDER 37 CFR 1.378(c)
:

This is a decision on the electronic petition, filed June 23,2008 ,under 37 CFR 1.378(c) to accept the unintentionally delayed payment of the 3.5 year maintenance fee for the above-identified patent.

The petition is GRANTED.

The maintenance fee is accepted, and the above-identified patent reinstated as of June 23,2008 . This decision also constitutes notice that the fee has been accepted. An electronic copy of the petition and this decision has been created as an entry in an Image File Wrapper. Nevertheless, petitioner should print and retain an independent copy

Telephone inquires related to this electronic decision should be directed to the Electronic Business Center at 1-866-217-9197.

UNITED STATES PATENT AND TRADEMARK OFFICE

COMMISSIONER FOR PATENTS
UNITED STATES PATENT AND TRADEMARK OFFICE
P.O. BOX 1450
ALEXANDRIA, VA 22313-1450
www.uspto.gov

APR -7 2005

In re Application of	:	
Gregory Fossella	:	
Serial No. 10/122,787	:	DECISION ON PETITION
Filed: April 15, 2002	:	TO MAKE SPECIAL
For: UTILITY KNIFE	:	

Applicant's petition, filed October 4, 2004, requests that this application be rendered special for examination in that applicant is over sixty-five (65) years of age.

The petition has been reviewed and is found to be in compliance with the requirements for special status as set forth in Section 708.02(IV) of the Manual of Patent Examining Procedure (MPEP).

PETITION GRANTED.

E. R. Kazenske, Director
Technology Center 3700

George L. Greenfield
Wolf, Greenfield & Sacks, PC
600 Atlantic Avenue
Boston, MA 02210

UNITED STATES PATENT AND TRADEMARK OFFICE

Commissioner for Patents
United States Patent and Trademark Office
P.O. Box 1450
Alexandria, VA 22313-1450
www.uspto.gov

March 2005

Philips Intellectual Property & Standards
P.O. Box 3001
Briarcliff Manor, NY 10510

MAR 17 2005

In re Application of:	:	
Stefan Butzmann	:	DECISION ON PETITION
Serial No.: 10/122,791	:	TO WITHDRAW THE
Filed: April 12, 2002	:	HOLDING OF ABANDONMENT
Attorney Docket No.: PHDE 010104	:	

This is a decision on the petition to withdraw the holding of abandonment under 37 C.F.R. § 1.181 filed on June 7, 2004. There is no fee for this petition.

The petition is **GRANTED**.

This application became abandoned for failure to pay the required issue fee and publication fee within the statutory period of three months from the mailing date of the Notice of Allowance. The Notice of Allowability and the Notice of Allowance and Fee(s) Due (hereinafter "Notices") were both mailed on December 23, 2003. A Notice of Abandonment was mailed on May 14, 2004.

Petitioner asserts that the Notice of Allowance was never received by the applicants. The petition provides the required showing under MPEP § 711.03(c) to establish nonreceipt of an Office action. It includes a statement from the practitioner stating that the Notice of Allowance of December 23, 2003 was not received and attesting to the fact that a search of the file jacket and docket records indicates that the Notice of Allowance was not received. It also includes a copy of the docket records where the nonreceived Notice of Allowance would have been entered had the Notice of Allowance been received. The evidence is sufficient to establish that the Notice of Allowance of December 23, 2003 was not received.

Accordingly, the Notice of Abandonment mailed May 14, 2004 is hereby **VACATED** and the holding of abandonment is withdrawn.

This application is being forwarded to the Technical Support Staff of Technology Center 2800 for the mailing of new "Notices." The mailing of a new Notice of Allowance and Fee(s) Due will set a new non-extendable due date for the payment of the Issue Fee.

Any inquiries regarding this decision should be directed to Edward Westin at (571) 272-1638.

Howard N. Goldberg, Director
Technology Center 2800
Semiconductors, Electrical and Optical
Systems and Components

UNITED STATES PATENT AND TRADEMARK OFFICE

Commissioner for Patents
United States Patent and Trademark Office
P.O. Box 1450
Alexandria, VA 22313-1450
www.uspto.gov

March 2005

Philips Intellectual Property & Standards
P.O. Box 3001
Briarcliff Manor, NY 10510

MAR 17 2005

In re Application of:	:	
Stefan Butzmann	:	DECISION ON PETITION
Serial No.: 10/122,791	:	TO WITHDRAW THE
Filed: April 12, 2002	:	HOLDING OF ABANDONMENT
Attorney Docket No.: PHDE 010104	:	

This is a decision on the petition to withdraw the holding of abandonment under 37 C.F.R. § 1.181 filed on June 7, 2004. There is no fee for this petition.

The petition is **GRANTED**.

This application became abandoned for failure to pay the required issue fee and publication fee within the statutory period of three months from the mailing date of the Notice of Allowance. The Notice of Allowability and the Notice of Allowance and Fee(s) Due (hereinafter "Notices") were both mailed on December 23, 2003. A Notice of Abandonment was mailed on May 14, 2004.

Petitioner asserts that the Notice of Allowance was never received by the applicants. The petition provides the required showing under MPEP § 711.03(c) to establish nonreceipt of an Office action. It includes a statement from the practitioner stating that the Notice of Allowance of December 23, 2003 was not received and attesting to the fact that a search of the file jacket and docket records indicates that the Notice of Allowance was not received. It also includes a copy of the docket records where the nonreceived Notice of Allowance would have been entered had the Notice of Allowance been received. The evidence is sufficient to establish that the Notice of Allowance of December 23, 2003 was not received.

Accordingly, the Notice of Abandonment mailed May 14, 2004 is hereby **VACATED** and the holding of abandonment is withdrawn.

This application is being forwarded to the Technical Support Staff of Technology Center 2800 for the mailing of new "Notices." The mailing of a new Notice of Allowance and Fee(s) Due will set a new non-extendable due date for the payment of the Issue Fee.

Any inquiries regarding this decision should be directed to Edward Westin at (571) 272-1638.

Howard N. Goldberg, Director
Technology Center 2800
Semiconductors, Electrical and Optical
Systems and Components

Under the Paperwork Reduction Act of 1995, no persons are required to respond to a collection of information unless it displays valid OMB control number.

PETITION TO ACCEPT UNINTENTIONALLY DELAYED PAYMENT OF MAINTENANCE FEE IN AN EXPIRED PATENT (37 CFR 1.378(c))

Patent Number	Issue Date (YYYY-MM-DD)	Application Number	Filing Date (YYYY-MM-DD)	Docket Number (if applicable)
6625246	2003-09-23	10122819	2002-04-12	120278

CAUTION: Maintenance fee (and surcharge, if any) payment must correctly identify: (1) the patent number and (2) the application number of the actual U.S. application leading to issuance of that patent to ensure the fee(s) is/are associated with the correct patent. 37 CFR 1.366(c) and (d).

SMALL ENTITY
☒ Patentee claims, or has previously claimed, small entity status. See 37 CFR 1.27.

LOSS OF ENTITLEMENT TO SMALL ENTITY STATUS
☐ Patentee is no longer entitled to small entity status. See 37 CFR 1.27(g)

NOT Small Entity		Small Entity	
Fee	Code	Fee	Code
○ 3 ½ year	(1551)	◉ 3 ½ year	(2551)
○ 7 ½ year	(1552)	○ 7 ½ year	(2552)
○ 11 ½ year	(1553)	○ 11 ½ year	(2553)

SURCHARGE
The surcharge required by 37 CFR 1.20(i)(2) (Fee Code 1558) must be paid as a condition of accepting unintentionally delayed payment of the maintenance fee.

MAINTENANCE FEE (37 CFR 1.20(e)-(g))
The appropriate maintenance fee must be submitted with this petition.

STATEMENT
THE UNDERSIGNED CERTIFIES THAT THE DELAY IN PAYMENT OF THE MAINTENANCE FEE TO THIS PATENT WAS UNINTENTIONAL

PETITIONER(S) REQUEST THAT THE DELAYED PAYMENT OF THE MAINTENANCE FEE BE ACCEPTED AND THE PATENT REINSTATED

THIS PORTION MUST BE COMPLETED BY THE SIGNATORY OR SIGNATORIES

37 CFR 1.378(d) states: "Any petition under this section must be signed by an attorney or agent registered to practice before the Patent and Trademark Office, or by the patentee, the assignee, or other party in interest."

I certify, in accordance with 37 CFR 1.4(d)(4) that I am

◉ An attorney or agent registered to practice before the Patent and Trademark Office

○ A sole patentee

○ A joint patentee; I certify that I am authorized to sign this submission on behalf of all the other patentees.

○ A joint patentee; all of whom are signing this e-petition

○ The assignee of record of the entire interest

Patent Practitioner			
A signature of the applicant or representative is required in accordance with 37 CFR 1.33 and 10.18. Please see 37 CFR 1.4(d) for the form of the signature			
Signature	/Michael B. Fein/	Date (YYYY-MM-DD)	2007-11-20
Name	Michael B. Fein	Registration Number	25333

This collection of information is required by 37 CFR 1.378(c). The information is required to obtain or retain a benefit by the public which is to file (and by the USPTO to process) an application. Confidentiality is governed by 35 U.S.C. 122 and 37 CFR 1.11 and 1.14. This collection is estimated to take 1 hour to complete, including gathering, preparing, and submitting the completed application form to the USPTO. Time will vary depending upon the individual case. Any comments on the amount of time you require to complete this form and/ or suggestions for reducing this burden, should be sent to the Chief Information Officer, U.S. Patent and Trademark Office, U.S. Department of Commerce, P.O. Box 1450, Alexandria, VA 22313-1450. DO NOT SEND FEES OR COMPLETED FORMS TO THIS ADDRESS. **This form can only be used when in conjunction with EFS-Web. If this form is mailed to the USPTO, it may cause delays in reinstating the patent.**

Privacy Act Statement

The Privacy Act of 1974 (P.L. 93-579) requires that you be given certain information in connection with your submission of the attached form related to a patent application or patent. Accordingly, pursuant to the requirements of the Act, please be advised that: (1) the general authority for the collection of this information is 35 U.S.C. 2(b)(2); (2) furnishing of the information solicited is voluntary; and (3) the principal purpose for which the information is used by the U.S. Patent and Trademark Office is to process and/or examine your submission related to a patent application or patent. If you do not furnish the requested information, the U.S. Patent and Trademark Office may not be able to process and/or examine your submission, which may result in termination of proceedings or abandonment of the application or expiration of the patent.

The information provided by you in this form will be subject to the following routine uses:

1. The information on this form will be treated confidentially to the extent allowed under the Freedom of Information Act (5 U.S.C. 552) and the Privacy Act (5 U.S.C. 552a). Records from this system of records may be disclosed to the Department of Justice to determine whether the Freedom of Information Act requires disclosure of these record s.

2. A record from this system of records may be disclosed, as a routine use, in the course of presenting evidence to a court, magistrate, or administrative tribunal, including disclosures to opposing counsel in the course of settlement negotiations.

3. A record in this system of records may be disclosed, as a routine use, to a Member of Congress submitting a request involving an individual, to whom the record pertains, when the individual has requested assistance from the Member with respect to the subject matter of the record.

4. A record in this system of records may be disclosed, as a routine use, to a contractor of the Agency having need for the information in order to perform a contract. Recipients of information shall be required to comply with the requirements of the Privacy Act of 1974, as amended, pursuant to 5 U.S.C. 552a(m).

5. A record related to an International Application filed under the Patent Cooperation Treaty in this system of records may be disclosed, as a routine use, to the International Bureau of the World Intellectual Property Organization, pursuant to the Patent Cooperation Treaty.

6. A record in this system of records may be disclosed, as a routine use, to another federal agency for purposes of National Security review (35 U.S.C. 181) and for review pursuant to the Atomic Energy Act (42 U.S.C. 218(c)).

7. A record from this system of records may be disclosed, as a routine use, to the Administrator, General Services, or his/her designee, during an inspection of records conducted by GSA as part of that agency's responsibility to recommend improvements in records management practices and programs, under authority of 44 U.S.C. 2904 and 2906. Such disclosure shall be made in accordance with the GSA regulations governing inspection of records for this purpose, and any other relevant (i.e., GSA or Commerce) directive. Such disclosure shall not be used to make determinations about individuals.

8. A record from this system of records may be disclosed, as a routine use, to the public after either publication of the application pursuant to 35 U.S.C. 122(b) or issuance of a patent pursuant to 35 U.S.C. 151. Further, a record may be disclosed, subject to the limitations of 37 CFR 1.14, as a routine use, to the public if the record was filed in an application which became abandoned or in which the proceedings were terminated and which application is referenced by either a published application, an application open to public inspections or an issued patent.

9. A record from this system of records may be disclosed, as a routine use, to a Federal, State, or local law enforcement agency, if the USPTO becomes aware of a violation or potential violation of law or regulation.

UNITED STATES PATENT AND TRADEMARK OFFICE

Commissioner for Patents
United States Patent and Trademark Office
P.O. Box 1450
Alexandria, VA 22313-1450
www.uspto.gov

In re Patent No. 6625246
Issue Date: September 23,2003
Application No. 10122819
Filed: April 12,2002
Attorney Docket No. 120278

:

:DECISION GRANTING PETITION
:UNDER 37 CFR 1.378(c)

:

This is a decision on the electronic petition, filed November 20,2007 ,under 37 CFR 1.378(c) to accept the unintentionally delayed payment of the 3.5 year maintenance fee for the above-identified patent.

The petition is GRANTED.

The maintenance fee is accepted, and the above-identified patent reinstated as of November 20,2007. This decision also constitutes notice that the fee has been accepted. An electronic copy of the petition and this decision has been created as an entry in an Image File Wrapper. Nevertheless, petitioner should print and retain an independent copy

Telephone inquires related to this electronic decision should be directed to the Electronic Business Center at 1-866-217-9197.

UNITED STATES PATENT AND TRADEMARK OFFICE

COMMISSIONER FOR PATENTS
UNITED STATES PATENT AND TRADEMARK OFFICE
WASHINGTON, D.C. 20231
www.uspto.gov

Paper No. 5

ROBERT P. LENART
PIETRAGALLO BOSICK & GORDON
ONE OXFORD CENTER, 38TH FLOOR
301 GRANT STREET
PITTSBURGH, PA 19219

COPY MAILED

AUG 16 2002

OFFICE OF PETITIONS

In re Application of	:	
Jerry R. Johanson	:	
Application No. 10/122,830	:	NOTICE
Filed: April 15, 2002	:	
Attorney Docket No. TRUMIP 50280	:	

This is a notice regarding your request for acceptance of a fee deficiency submission under 37 CFR 1.28. On September 1, 1998, the Court of Appeals for the Federal Circuit held that 37 CFR 1.28(c) is the sole provision governing the time for correction of the erroneous payment of the issue fee as a small entity. **See DH Technology v. Synergystex International, Inc. 154 F.3d 1333, 47 USPQ2d 1865 (Fed. Cir. Sept. 1, 1998).**

The Office no longer investigates or rejects original or reissue applications under 37 CFR 1.56. **1098 Off. Gaz. Pat. Office 502 (January 3, 1989)**. Therefore, nothing in this Notice is intended to imply that an investigation was done.

Your fee deficiency submission under 37 CFR 1.28 is hereby **ACCEPTED**.

Inquiries related to this communication should be directed to the Office of Petitions Staff at (703) 305-9285.

This file is being forwarded to Technology Center AU 3754.

Wan Laymon
Petitions Examiner
Office of Petitions
Office of the Deputy Commissioner
for Patent Examination Policy

SPE: W. Chin

SPE RESPONSE FOR CERTIFICATE OF CORRECTION

Paper No.: _____

DATE : 2/28/06

TO SPE OF : ART UNIT 2616

SUBJECT : Request for Certificate of Correction for Appl. No.: 10/122,886 Patent No.: 7149183

Please respond to this request for a certificate of correction within 7 days.

Please review the requested changes/corrections as shown in the **COCIN** document(s) in the IFW application image. No new matter should be introduced, nor should the scope or meaning of the claims be changed.

Please complete the response (see below) and forward the completed response to scanning using document code **COCX**.

Lamonte M. Newsome
Certificates of Correction Branch
703-308-9390 ext. 112

Thank You For Your Assistance

The request for issuing the above-identified correction(s) is hereby:

Note your decision on the appropriate box.

- ☑ **Approved** — **All** changes apply.
- ☐ **Approved in Part** — Specify below which changes **do not** apply.
- ☐ **Denied** — State the reasons for denial below.

Comments: _____

LYNN FEILD
SUPERVISORY PATENT EXAMINER

SPE — Art Unit 2616

UNITED STATES PATENT AND TRADEMARK OFFICE

Commissioner for Patents
United States Patent and Trademark Office
P.O. Box 1450
Alexandria, VA 22313-1450
www.uspto.gov

LEONARD & PROEHL, PROF. L.L.C.
3500 SOUTH FIRST AVENUE CIRCLE
SUITE 250
SIOUX FALLS SD 57105

COPY MAILED

MAR 2 4 2005

OFFICE OF PETITIONS

In re Application of
Jacqueline Burton
Application No.10/122,907
Filed: April 12, 2002
Attorney Docket Number: 21-0356
Title of Invention: Cart

ON PETITION

This is a decision on the petition filed March 1, 2005, under 37 CFR 1.137(b) to revive the above-identified application.

This application became abandoned for failure to timely submit the issue fee, as required by the Notice of Allowance and Fee (s) Due which was mailed March 1, 2004. The Notice of Allowance and Fee (s) Due set a three (3) month statutory period for reply. Extensions of time were not available under the provisions of 37 CFR 1.136(a). Accordingly, this application became abandoned on July 31, 2004. A Notice of Abandonment was mailed on September 9, 2004.

The requirements for a grantable petition under 37 CFR 1.137(b) have been met. This petition is hereby **Granted**.

The Office acknowledges receipt of the formal drawings submitted with the instant petition.

This application is being forwarded to the Office of Patent Publication for processing into a patent.

Telephone inquiries should be directed to the undersigned at (571) 272-3215.

Charlema R. Grant

Charlema R. Grant
Petitions Attorney
Office of Petitions

UNITED STATES PATENT AND TRADEMARK OFFICE

Commissioner for Patents
United States Patent and Trademark Office
P.O. Box 1450
Alexandria, VA 22313-1450
www.uspto.gov

LEONARD & PROEHL
3500 S. First Ave. Circle, Suite 250
Sioux Falls, SD 57105-5807

COPY MAILED

NOV 23 2004

OFFICE OF PETITIONS

In re Application of	:	
Beverly M. Peterson	:	
Application No. 10/122,912	:	ON PETITION
Filed: April 12, 2002	:	
Attorney Docket No. CHR789	:	

This is a decision on the petition under 37 CFR 1.137(b), filed October 29, 2004, to revive the above-identified application.

The petition is **GRANTED**.

This application became abandoned for failure to timely file a proper reply to the final Office action mailed December 17, 2003. Accordingly, this application became abandoned on March 18, 2004. A Notice of Abandonment was mailed on August 12, 2004.

The file is being forwarded to Technology Center 3600 to enter the amendment filed October 29, 2004, and further examination *in due course*.

Telephone inquiries concerning this matter may be directed to the undersigned at (571)272-3228.

Edward J. Tannouse
Petitions Attorney
Office of Petitions
United States Patent and Trademark Office

UNITED STATES PATENT AND TRADEMARK OFFICE

COMMISSIONER FOR PATENTS
UNITED STATES PATENT AND TRADEMARK OFFICE
WASHINGTON, D.C. 20231
www.uspto.gov

Paper No. 6

YOUNG & THOMPSON
745 SOUTH 23RD STREET 2ND FLOOR
ARLINGTON VA 22202

COPY MAILED

SEP 0 6 2002

OFFICE OF PETITIONS

In re Application of
Shimura, et al.
Application No. 10/122,933
Filed: April 16, 2002
Attorney Docket No. 8026-1002
For: MAGNETORESISTIVE DEVICE AND METHOD OF PRODUCING THE SAME

DECISION GRANTING PETITION

This is a decision on the petition entitled, " PETITION UNDER 37 CFR 1.181 TO ACCORD A FILING DATE," filed July 22, 2002, requesting, in effect, withdrawal of the Notice of Incomplete Nonprovisional Application (Notice), mailed June 21, 2002. The petition will be treated under 37 CFR 1.53(e).

The petition under 37 CFR 1.53(e) is **GRANTED**.

The application was deposited on April 16, 2002. On June 217, 2002, the Office of Initial Patent Examination mailed a Notice informing petitioners that the application had not been accorded a filing date because the specification, including at least one claim, appeared to have been omitted.

In response to the Notice, petitioners timely filed the present petition. Petitioners request that application be accorded a filing date of April 16, 2002 on the basis that a specification, including at least one claim, was received in the Patent and Trademark Office (PTO) on April 16, 2002. In support, the petition is accompanied by a copy of applicants' itemized postcard receipt showing an Office of Initial Patent Examination date stamp citing April 16, 2002 as the date of receipt. The postcard lists, *inter alia*, that the filing included 79 pages of specification with 83 claims.

The return postcard constitutes *prima facie* evidence that the entire specification, including 83 claims, was filed on April 16, 2002. MPEP 503. Accordingly, the request is granted.

No petition fee has been or will be charged in connection with this matter.

The application is being returned to Office of Initial Patent Examination for further processing, with a filing date of **April 16, 2002**, using the 79 pages of specification with 83 claims and the abstract supplied with the petition for processing purposes.

Any inquiries pertaining to this matter may be directed to the undersigned at (703) 308-6712.

E. Shirene Willis

E. Shirene Willis
Senior Petitions Attorney
Office of Petitions
Office of the Deputy Commissioner
for Patent Examination Policy

UNITED STATES PATENT AND TRADEMARK OFFICE

Commissioner for Patents
United States Patent and Trademark Office
P.O. Box 1450
Alexandria, VA 22313-1450
www.uspto.gov

BAKER BOTTS LLP
2001 ROSS AVENUE
SUITE 600
DALLAS, TX 75201-2980

MAILED

APR 30 2010

OFFICE OF PETITIONS

In re Application of :
Robert Arena et al :
Application No. 10/122,942 : ON PETITION
Filed: April 12, 2002 :
Attorney Docket No. 002328.0717

This is a decision on the petition, filed April 28, 2010 under 37 CFR 1.313(c)(2) to withdraw the above-identified application from issue after payment of the issue fee.

The petition is **GRANTED**.

The above-identified application is withdrawn from issue for consideration of a submission under 37 CFR 1.114 (request for continued examination). See 37 CFR 1.313(c)(2).

Petitioner is advised that the issue fee paid on January 29, 2010 in the above-identified application cannot be refunded. If, however, the above-identified application is again allowed, petitioner may request that it be applied towards the issue fee required by the new Notice of Allowance.[1]

Telephone inquiries should be directed to Irvin Dingle at (571) 272-3210.

This matter is being referred to Technology Center AU 3695 for processing of the request for continued examination under 37 CFR 1.114 and for consideration of the concurrently filed Information Disclosure Statement.

/Irvin Dingle/
Irvin Dingle
Petitions Examiner
Office of Petitions

---

[1] The request to apply the issue fee to the new Notice may be satisfied by completing and returning the new Issue Fee Transmittal Form PTOL-85(b), which includes the following language thereon: Commissioner for Patents is requested to apply the Issue Fee and Publication Fee (if any) or re-apply any previously paid issue fee to the application identified above. Petitioner is advised that, whether a fee is indicated as being due or not, the Issue Fee Transmittal Form **must** be completed and timely submitted to avoid abandonment. Note the language in bold text on the first page of the Notice of Allowance and Fee(s) Due (PTOL-85).

UNITED STATES PATENT AND TRADEMARK OFFICE

Commissioner for Patents
United States Patent and Trademark Office
P.O. Box 1450
Alexandria, VA 22313-1450
www.uspto.gov

Paper No.

BAKER BOTTS L.L.P.
2001 ROSS AVENUE
SUITE 600
DALLAS TX 75201-2980

MAILED

JUL 16 2010

OFFICE OF PETITIONS

In re Application of :
Arena et al. :
Application No. 10/122,942 : ON APPLICATION FOR
Filed: 04/12/2002 : PATENT TERM ADJUSTMENT
Atty Docket No. :
002328.0717 :

This is in response to the "REQUEST FOR RECONSIDERATION OF PATENT TERM ADJUSTMENT UNDER 37 C.F.R. § 1.705(b)," filed on January 29, 2010, which is treated as a request for reconsideration under 37 CFR 1.705(b). Applicants submit that the correct patent term adjustment to be indicated on the patent should include an additional 1862 days pursuant to 35 U.S.C. § 154(b)(1)(B) in addition to the number of days specified in the mailing of the initial determination of patent term adjustment, assuming the patent issues on May 18, 2010. Applicants request this correction solely on the basis that the Office will take in excess of three years to issue this patent.

The instant application for patent term adjustment requests reconsideration of the patent term adjustment as it relates to the Office's failure to issue the patent within 3 years of the filing date, the application for patent term adjustment under 37 CFR 1.705(b) is **DISMISSED as PREMATURE**.

Knowledge of the actual date the patent issues is required to calculate the amount, if any, of additional patent term patentee is entitled to for Office failure to issue the patent within 3 years. See § 1.702(b). The computer will not undertake the § 1.702(b) calculation until the actual date of issuance of the patent has been determined. Likewise, the computer will not calculate any further Office delay under § 1.702(a)(4) or applicant delay under § 1.704(c)(10) until the actual date of issuance of the patent has been determined. As such, the Office can not make a determination on the correctness of the patent term adjustment until the patent has issued.

Requesting reconsideration of the patent term adjustment to be indicated on the patent under 37 CFR 1.705(b) based on the initial determination of patent term adjustment and a projected issuance date of the patent is premature. Accordingly, it is appropriate to dismiss as premature such a request.

It is noted that, prior to a decision on the subject application for patent term adjustment being rendered, on April 28, 2010, 2008, applicants filed a petition to withdraw from issue along with a request for continued examination (RCE). By decision mailed April 30, 2010, the withdrawal from issue was granted. Prosecution was reopened.

Rather than file an application for patent term adjustment under 37 CFR 1.705(b) contesting the 37 CFR 1.702(b) calculation at the time of the mailing of the notice of allowance, applicant is advised that they may wait until the time of the issuance of the patent and file a request for reconsideration of the patent term adjustment pursuant to 37 CFR 1.705(d). As the USPTO does not calculate the amount of time earned pursuant to 37 CFR 1.702(b) until the time of the issuance of the patent, the Office will consider any request for reconsideration of the patent term adjustment due to an error in the calculation of 37 CFR 1.702(b) to be timely if the request for reconsideration is filed within two months of the issuance of the patent. However, as to all other bases for contesting the initial determination of patent term adjustment received with the notice of allowance, applicant must timely file an application for patent term adjustment prior to the payment of the issue fee[1].

The Office acknowledges submission of the $200.00 fee set forth in 37 CFR 1.18(e). No additional fees are required.

---

1 For example, if applicant disputes both the calculation of patent term adjustment under 37 CFR 1.702(a)(1) for Office failure to mail a first Office action or notice of allowance not later than fourteen months after the date on which the application was filed and under 37 CFR 1.702(b) for Office failure to issue a patent within three years of the actual filing date of the application, then applicant must still timely file an application for patent term adjustment prior to the payment of the issue fee to contest the calculation of Office delay in issuing a first Office action or notice of allowance. See 37 CFR 1.705(b) and 35 U.S.C. 154(b)(3)(B). A dispute as to the calculation of the §1.702(a)(1) period raised on request for reconsideration of patent term adjustment under 37 CFR 1.705(d) will be dismissed as untimely filed.

Any request for reconsideration of the patent term adjustment indicated on the patent must be timely filed within 2 months after issuance pursuant to 37 CFR 1.705(d) and must include payment of the required fee under 37 CFR 1.18(e).

Technology Center Art Unit 3695 has been advised of this decision. The application is, therefore, forwarded to the Technology Center for further processing.

Telephone inquiries specific to this decision should be directed to the undersigned at (571) 272-3231.

DWood

Douglas I. Wood
Senior Petitions Attorney
Office of Petitions

UNITED STATES PATENT AND TRADEMARK OFFICE

COMMISSIONER FOR PATENTS
UNITED STATES PATENT AND TRADEMARK OFFICE
WASHINGTON, D.C. 20231
www.uspto.gov

Paper No. 5

MAYER FORTKOR & WILLIAMS PC
251 NORTH AVENUE WEST
2ND FLOOR
WESTFIELD, NJ 07090

COPY MAILED

MAR 07 2003

OFFICE OF PETITIONS

In re Application of :
Julia J. Brown et al :
Application No. 10/122,969 :
Filed: April 12, 2002 :
Attorney Docket No. UDC-23401 :

NOTICE

This is a notice regarding your request for acceptance of a fee deficiency submission under 37 CFR 1.28. On September 1, 1998, the Court of Appeals for the Federal Circuit held that 37 CFR 1.28(c) is the sole provision governing the time for correction of the erroneous payment of the issue fee as a small entity. **See DH Technology v. Synergystex International, Inc. 154 F.3d 1333, 47 USPQ2d 1865 (Fed. Cir. Sept. 1, 1998).**

The Office no longer investigates or rejects original or reissue applications under 37 CFR 1.56. **1098 Off. Gaz. Pat. Office 502 (January 3, 1989).** Therefore, nothing in this Notice is intended to imply that an investigation was done.

Your fee deficiency submission under 37 CFR 1.28 is hereby **ACCEPTED**.

Inquiries related to this communication should be directed to the Office of Petitions Staff at (703) 305-9285.

This file is being forwarded to Technology Center AU 2818.

Wan Laymon
Petitions Examiner
Office of Petitions
Office of the Deputy Commissioner
for Patent Examination Policy

UNITED STATES PATENT AND TRADEMARK OFFICE

Commissioner for Patents
United States Patent and Trademark Office
P.O. Box 1450
Alexandria, VA 22313-1450
www.uspto.gov

PATENT GROUP
FOLEY HOAG LLP
155 SEAPORT BLVD
BOSTON, MA 02210-2600

COPY MAILED

MAY 16 2006

OFFICE OF PETITIONS

In re Application of	:	
Steve Tulley et al	:	
Application No. 10/123,065	:	DECISION ON PETITION
Filed: April 11, 2002	:	TO WITHDRAW
Attorney Docket No. SUW-001.03	:	FROM RECORD
	:	

This is a decision on the Request to Withdraw as attorney or agent under 37 C.F.R. § 1.36(b) or 37 C.F.R. § 10.40 filed January 27, 2006.

The request is **APPROVED**.

A grantable request to withdraw as attorney/agent of record must be signed by every attorney/agent seeking to withdraw or contain a clear indication that one attorney is signing on behalf of another/others. A request to withdraw will not be approved unless at least 30 (thirty) days would remain between the date of approval and the later of the expiration date of a time to file a response or the expiration date of the maximum time period which can be extended under 37 C.F.R. § 1.136(a).

The request was signed by Scott E. Kamholz in accordance with the S-signature requirements of 37 CR 1.4(d)(2) on behalf of all the attorneys/agents of record who are associated with Customer Number 25181. The file record discloses that Scott E. Kamholz is associated with the aforementioned customer number. Accordingly, all the attorneys/agents associated with Customer Number 2581 have been withdrawn.

In view of the withdrawal of all the attorneys/agents of record, applicant is reminded that there is no attorney of record at this time.

The request to withdraw directs that the correspondence address should be changed to Advanced Bionics Corporation, who appears to be an assignee and have **part interest** in this application. Accordingly, the correspondence address will be changed to the below-listed address.

Office records reflect that a non-final Office action was mailed on March 28, 2006, but was returned as undeliverable on April 6, 2006. The Technology Center has been directed to re-mail the Office action of March 28, 2006.

Telephone inquires concerning this decision should be directed to the undersigned at 571-272-3218.

Frances Hicks
Petitions Examiner
Office of Petitions

cc:

Advanced Bionics Corporation
25129 Rye Canyon Road
Valencia, CA 91355

UNITED STATES PATENT AND TRADEMARK OFFICE

Commissioner for Patents
United States Patent and Trademark Office
P.O. Box 1450
Alexandria, VA 22313-1450
www.uspto.gov

MYERS BIGEL SIBLEY & SAJOVEC
POST OFFICE BOX 37428
RALEIGH, NC 27627

COPY MAILED

NOV 07 2007

OFFICE OF PETITIONS

In re Application of	:	
Steve Tulley et al	:	
Application No. 10/123,065	:	DECISION ON PETITION
Filed: April 11, 2002	:	
Attorney Docket No. 9450-15IP	:	

This is a decision on the petition under 37 CFR 1.137(b), filed March 28, 2007, to revive the above-identified application, which, for the reasons stated below, is being treated as a petition under 37 CFR 1.181(a) (no fee) to withdraw any abandonment which may have occurred in this application.

The petition is **GRANTED.**

A review of the file record discloses that a non-final Office action was mailed on March 28, 2006, setting a three month shortened statutory period for reply. However, the March 28, 2006 Office action was returned as being undeliverable. Therefore, this case would technically be abandoned by operation of law after expiration of the period set in the March 28, 2006 Office action. It is further noted in the decision mailed May 16, 2006 that a statement was made that the Technology Center has been directed to re-mail the March 28, 2006 Office action since it was returned to the Office. The record fails to show that the Office re-mailed the Office action setting a new period for reply.

Where an Office action is returned as undeliverable, the Office must make an attempt to ascertain the correct address and re-mail the Office action, with the period being reset with the date of re-mailing. *Note* In re Gourtoff, 1924 C.D. 153, 329 O.G. 536 (Comm'r Pat. 1924). If the Office is then not successful in delivering the re-mailed Office action and the period dating from the re-mailing elapses with no communication from applicant, the application will then be held abandoned. However, there is no evidence in the file record that the Office ever attempted to ascertain applicant's address and re-mail the Office action,

which is contrary to the Office's own procedures. *See* MPEP 707.13.

In view of the above, it would be appropriate here to withdraw any holding of abandonment. Accordingly, this application is not abandoned in fact.

In view of the treatment of this petition under 37 CFR 1.181(a), no petition fee is required and none has been assessed to petitioner's deposit account.

This application is being referred to Technology Center AU 3768 for appropriate action in the normal course of business on the reply received March 28, 2007.

Inquiries concerning this decision may be directed to the undersigned at (571) 272-3218.

Frances Hicks
Petitions Examiner
Office of Petitions

UNITED STATES PATENT AND TRADEMARK OFFICE

Commissioner for Patents
United States Patent and Trademark Office
P.O. Box 1450
Alexandria, VA 22313-1450
www.uspto.gov

MYERS BIGEL SIBLEY & SAJOVEC
PO BOX 37428
RALEIGH NC 27627

COPY MAILED

MAY 1 9 2008

OFFICE OF PETITIONS

In re Application of
TULLEY, Steve et al.
Application No. 10/123,065
Filed: April 11, 2002
Attorney Docket No. **9450-15IP**

DECISION ON PETITION
TO WITHDRAW
FROM RECORD

This is a decision on the Request to Withdraw as attorney or agent of record under 37 C.F.R. § 1.36(b), filed February 15, 2008.

The request is **NOT APPROVED**.

A grantable request to withdraw as attorney/agent of record must be signed by every attorney/agent seeking to withdraw or contain a clear indication that one attorney is signing on behalf of another/others. A request to withdraw will not be approved unless at least 30 (thirty) days would remain between the date of approval and the later of the expiration date of a time to file a response or the expiration date of the maximum time period which can be extended under 37 C.F.R. § 1.136(a).

The Office cannot approve the request at this time since the reasons provided do not meet any of the conditions under the mandatory or permissive categories enumerated in 37 CFR 10.40. Section 10.40 of Title 37 of the Code of Federal Regulation states, "[a] practitioner shall not withdraw from employment in a proceeding before the Office without permission from the Office[.]" More specifically, 37 CFR 10.40 states, "[i]f paragraph (b) of this section is not applicable, a practitioner may not request permission to withdraw in matter pending before the Office unless such request or such withdrawal is" for one the permissive reasons listed in 37 CFR 10.40(c). The reason set forth in the request, ownership transfer, does not meet any of the conditions set forth in 37 CFR 10.40.

In order to request or take action in a patent matter, the assignee must establish its ownership of the patent to the satisfaction of the Director. In this regard, a Statement under 37 CFR 3.73(b) must have either: (i) documentary evidence of a chain of title from the original owner to the assignee (e.g., copy of an executed assignment), and a statement affirming that the documentary evidence of the chain of title from the original owner to the assignee was or concurrently is being submitted for recordation pursuant to § 3.11; or (ii) a statement specifying where documentary

evidence of a chain of title from the original owner to the assignee is recorded in the assignment records of the Office (e.g., reel and frame number).

All future communications from the Office will continue to be directed to the above-listed address until otherwise notified by applicant.

Telephone inquiries concerning this decision should be directed to Tredelle Jackson at 571-272-2783.

Tredelle D. Jackson
Petitions Examiner
Office of Petitions

UNITED STATES PATENT AND TRADEMARK OFFICE

Commissioner for Patents
United States Patent and Trademark Office
P.O. Box 1450
Alexandria, VA 22313-1450
www.uspto.gov

In re Patent No. 6818668
Issue Date: November 16,2004
Application No. 10123068
Filed: April 12,2002
Attorney Docket No. 1400-059

:
:DECISION GRANTING PETITION
:UNDER 37 CFR 1.378(c)
:

This is a decision on the electronic petition, filed September 14,2009 ,under 37 CFR 1.378(c) to accept the unintentionally delayed payment of the 3.5 year maintenance fee for the above-identified patent.

The petition is **GRANTED**.

The maintenance fee is accepted, and the above-identified patent reinstated as of September 14,2009 . This decision also constitutes notice that the fee has been accepted. An electronic copy of the petition and this decision has been created as an entry in the Image File Wrapper. Nevertheless, petitioner should print and retain an independent copy.

Telephone inquiries related to this electronic decision should be directed to the Electronic Business Center at 1-866-217-9197.

PTO/SB/66 (03-09)
Approved for use through 03/31/2012. OMB 0651-0016
U.S. Patent and Trademark Office: U.S. DEPARTMENT OF COMMERCE
Under the Paperwork Reduction Act of 1995, no persons are required to respond to a collection of information unless it displays valid OMB control number.

PETITION TO ACCEPT UNINTENTIONALLY DELAYED PAYMENT OF MAINTENANCE FEE IN AN EXPIRED PATENT (37 CFR 1.378(c))

Patent Number	Issue Date (YYYY-MM-DD)	Application Number	Filing Date (YYYY-MM-DD)	Docket Number (if applicable)
6,818,668	2004-11-16	10/123,068	2002-04-12	BTL-000400US

CAUTION: Maintenance fee (and surcharge, if any) payment must correctly identify: (1) the patent number and (2) the application number of the actual U.S. application leading to issuance of that patent to ensure the fee(s) is/are associated with the correct patent. 37 CFR 1.366(c) and (d).

SMALL ENTITY
☒ Patentee claims, or has previously claimed, small entity status. See 37 CFR 1.27.

LOSS OF ENTITLEMENT TO SMALL ENTITY STATUS
☐ Patentee is no longer entitled to small entity status. See 37 CFR 1.27(g)

NOT Small Entity		Small Entity	
Fee	Code	Fee	Code
○ 3 ½ year	(1551)	◉ 3 ½ year	(2551)
○ 7 ½ year	(1552)	○ 7 ½ year	(2552)
○ 11 ½ year	(1553)	○ 11 ½ year	(2553)

SURCHARGE
The surcharge required by 37 CFR 1.20(i)(2) (Fee Code 1558) must be paid as a condition of accepting unintentionally delayed payment of the maintenance fee.

MAINTENANCE FEE (37 CFR 1.20(e)-(g))
The appropriate maintenance fee must be submitted with this petition.

STATEMENT
THE UNDERSIGNED CERTIFIES THAT THE DELAY IN PAYMENT OF THE MAINTENANCE FEE TO THIS PATENT WAS UNINTENTIONAL

PETITIONER(S) REQUEST THAT THE DELAYED PAYMENT OF THE MAINTENANCE FEE BE ACCEPTED AND THE PATENT REINSTATED

THIS PORTION MUST BE COMPLETED BY THE SIGNATORY OR SIGNATORIES

37 CFR 1.378(d) states: "Any petition under this section must be signed by an attorney or agent registered to practice before the Patent and Trademark Office, or by the patentee, the assignee, or other party in interest."

I certify, in accordance with 37 CFR 1.4(d)(4) that I am

◉ An attorney or agent registered to practice before the Patent and Trademark Office

○ A sole patentee

○ A joint patentee; I certify that I am authorized to sign this submission on behalf of all the other patentees.

○ A joint patentee; all of whom are signing this e-petition

○ The assignee of record of the entire interest

Patent Practitioner			
A signature of the applicant or representative is required in accordance with 37 CFR 1.33 and 10.18. Please see 37 CFR 1.4(d) for the form of the signature			
Signature	/Don D. Cha/	Date (YYYY-MM-DD)	2009-09-14
Name	Don D. Cha	Registration Number	40945

This collection of information is required by 37 CFR 1.378(c). The information is required to obtain or retain a benefit by the public which is to file (and by the USPTO to process) an application. Confidentiality is governed by 35 U.S.C. 122 and 37 CFR 1.11 and 1.14. This collection is estimated to take 1 hour to complete, including gathering, preparing, and submitting the completed application form to the USPTO. Time will vary depending upon the individual case. Any comments on the amount of time you require to complete this form and/ or suggestions for reducing this burden, should be sent to the Chief Information Officer, U.S. Patent and Trademark Office, U.S. Department of Commerce, P.O. Box 1450, Alexandria, VA 22313-1450. DO NOT SEND FEES OR COMPLETED FORMS TO THIS ADDRESS. **This form can only be used when in conjunction with EFS-Web. If this form is mailed to the USPTO, it may cause delays in reinstating the patent.**

Privacy Act Statement

The Privacy Act of 1974 (P.L. 93-579) requires that you be given certain information in connection with your submission of the attached form related to a patent application or patent. Accordingly, pursuant to the requirements of the Act, please be advised that: (1) the general authority for the collection of this information is 35 U.S.C. 2(b)(2); (2) furnishing of the information solicited is voluntary; and (3) the principal purpose for which the information is used by the U.S. Patent and Trademark Office is to process and/or examine your submission related to a patent application or patent. If you do not furnish the requested information, the U.S. Patent and Trademark Office may not be able to process and/or examine your submission, which may result in termination of proceedings or abandonment of the application or expiration of the patent.

The information provided by you in this form will be subject to the following routine uses:

1. The information on this form will be treated confidentially to the extent allowed under the Freedom of Information Act (5 U.S.C. 552) and the Privacy Act (5 U.S.C. 552a). Records from this system of records may be disclosed to the Department of Justice to determine whether the Freedom of Information Act requires disclosure of these records.

2. A record from this system of records may be disclosed, as a routine use, in the course of presenting evidence to a court, magistrate, or administrative tribunal, including disclosures to opposing counsel in the course of settlement negotiations.

3. A record in this system of records may be disclosed, as a routine use, to a Member of Congress submitting a request involving an individual, to whom the record pertains, when the individual has requested assistance from the Member with respect to the subject matter of the record.

4. A record in this system of records may be disclosed, as a routine use, to a contractor of the Agency having need for the information in order to perform a contract. Recipients of information shall be required to comply with the requirements of the Privacy Act of 1974, as amended, pursuant to 5 U.S.C. 552a(m).

5. A record related to an International Application filed under the Patent Cooperation Treaty in this system of records may be disclosed, as a routine use, to the International Bureau of the World Intellectual Property Organization, pursuant to the Patent Cooperation Treaty.

6. A record in this system of records may be disclosed, as a routine use, to another federal agency for purposes of National Security review (35 U.S.C. 181) and for review pursuant to the Atomic Energy Act (42 U.S.C. 218(c)).

7. A record from this system of records may be disclosed, as a routine use, to the Administrator, General Services, or his/her designee, during an inspection of records conducted by GSA as part of that agency's responsibility to recommend improvements in records management practices and programs, under authority of 44 U.S.C. 2904 and 2906. Such disclosure shall be made in accordance with the GSA regulations governing inspection of records for this purpose, and any other relevant (i.e., GSA or Commerce) directive. Such disclosure shall not be used to make determinations about individuals.

8. A record from this system of records may be disclosed, as a routine use, to the public after either publication of the application pursuant to 35 U.S.C. 122(b) or issuance of a patent pursuant to 35 U.S.C. 151. Further, a record may be disclosed, subject to the limitations of 37 CFR 1.14, as a routine use, to the public if the record was filed in an application which became abandoned or in which the proceedings were terminated and which application is referenced by either a published application, an application open to public inspections or an issued patent.

9. A record from this system of records may be disclosed, as a routine use, to a Federal, State, or local law enforcement agency, if the USPTO becomes aware of a violation or potential violation of law or regulation.

UNITED STATES PATENT AND TRADEMARK OFFICE

Commissioner for Patents
United States Patent and Trademark Office
P.O. Box 1450
Alexandria, VA 22313-1450
www.uspto.gov

FISH & RICHARDSON PC
P O BOX 1022
MINNEAPOLIS, MN 55440-1022

COPY MAILED

OCT 18 2005

OFFICE OF PETITIONS

In re Application of	:
Emilia Anderson et al	:
Application No. 10/123,072	: DECISION GRANTING PETITION
Filed: April 12, 2002	: UNDER 37 CFR 1.313(c)(2)
Atty Dkt No. 13445-018001/OG7 (6103B)	:

This is a decision on the petition, filed October 11, 2005, under 37 CFR 1.313(c)(2) to withdraw the above-identified application from issue after payment of the issue fee.

The petition is **GRANTED**.

The above-identified application is withdrawn from issue for consideration of a submission under 37 CFR 1.114 (request for continued examination). See 37 CFR 1.313(c)(2).

Petitioner is advised that the issue fee paid on July 5, 2005 in the above-identified application cannot be refunded. If, however, the above-identified application is again allowed, petitioner may request that it be applied towards the issue fee required by the new Notice of Allowance.[1]

Telephone inquiries should be directed to the undersigned at (571) 272-3218.

This matter is being referred to Technology Center AU 2879 for processing of the request for continued examination under 37 CFR 1.114 and for consideration of the Information Disclosure Statement.

Frances Hicks
Petitions Examiner
Office of Petitions

---

[1] *The request to apply the issue fee to the new Notice may be satisfied by completing and returning the new Issue Fee Transmittal Form PTOL-85(b) (along with any balance due or the amount due at the time of payment), which includes the following language thereon: "Commissioner for Patents is requested to apply the Issue Fee and Publication Fee (if any) or re-apply any previously paid issue fee to the application identified above." Petitioner is advised that, whether a fee is indicated as being due or not, the Issue Fee Transmittal Form* ***must*** *be completed and timely submitted to avoid abandonment. Note the language in bold text on the first page of the Notice of Allowance and Fee(s) Due (PTOL-85).*

UNITED STATES PATENT AND TRADEMARK OFFICE

COMMISSIONER FOR PATENTS
UNITED STATES PATENT AND TRADEMARK OFFICE
P.O. BOX 1450
ALEXANDRIA, VA 22313-1450
www.uspto.gov

COPY MAILED

APR 26 2005

OFFICE OF PETITIONS

CHIRON CORPORATION
P.O. BOX 8097
EMERYVILLE, CA 94662-8097

In re Application of
Robert J. Drummond, et al.
Application No. 10/123,092
Filed: April 11, 2002
Attorney Docket No. 1467.104

ON PETITION

This is a decision on the petition under 37 CFR 1.313(c)(2), filed April 25, 2005 to withdraw the above-identified application from issue after payment of the issue fee.

It does not appear that the instant petition is signed by an attorney of record. However, in accordance with 37 CFR 1.34(a), the signature of Carol A. Schneider appearing on the correspondence shall constitute a representation to the United States Patent and Trademark Office that she is authorized to represent the particular party on whose behalf she acts. However, if Ms. Schneider desires to receive correspondence regarding this file, the appropriate power of attorney documentation must be submitted. A courtesy copy of this decision is being mailed to Ms. Schneider, the petitioner herein. However, until otherwise instructed, all future correspondence regarding this application file will be directed solely to the above-noted correspondence address of record.

The petition is **DISMISSED AS MOOT**.

Petitioners request that the above-identified application be withdrawn from issue for consideration of a submission under 37 CFR 1.114 (request for continued examination). See 37 CFR 1.313(c)(2). However, it is noted that the request for continued examination is not signed. Consequently, the petition does not comply with the requirements of 37 CFR 1.313(c)(2).

Telephone inquiries relating to this decision should be directed to the undersigned at (571) 272-3204.

Sherry D. Brinkley
Petitions Examiner
Office of Petitions
Office of the Deputy Commissioner
for Patent Examination Policy

cc: CAROL A. SCHNEIDER, PH.D., J.D.
REED INTELLECTUAL PROPERTY LAW GROUP
800 MENLO AVENUE, SUITE 210
MENLO PARK, CA 94025

UNITED STATES PATENT AND TRADEMARK OFFICE

COMMISSIONER FOR PATENTS
UNITED STATES PATENT AND TRADEMARK OFFICE
P.O. BOX 1450
ALEXANDRIA, VA 22313-1450
www.uspto.gov

CHIRON CORPORATION
P.O. BOX 8097
EMERYVILLE, CA 94662-8097

COPY MAILED

APR 2 5 2005

OFFICE OF PETITIONS

In re Application of
Robert J. Drummond, et al.
Application No. 10/123,092
Filed: April 11, 2002
Attorney Docket No. 1467.104

ON PETITION

This is a decision on the petition under 37 CFR 1.313(c)(2), filed April 25, 2005 to withdraw the above-identified application from issue after payment of the issue fee.

The petition is **GRANTED**.

The above-identified application is withdrawn from issue for consideration of a submission under 37 CFR 1.114 (request for continued examination). See 37 CFR 1.313(c)(2).

Petitioner is advised that the issue fee paid on January 7, 2005, using a Certificate of Mailing or Transmission under 37 CFR 1.8 dated January 4, 2004, in the above-identified application cannot be refunded. If, however, the above-identified application is again allowed, petitioner may request that it be applied towards the issue fee required by the new Notice of Allowance. [1]

It is noted that the address given on the petition differs from the address of record. If appropriate, a change of address should be filed in this case in accordance with MPEP 601.03. A courtesy copy of this decision is being mailed to the address noted on the petition. However, until otherwise instructed, all future correspondence regarding this application will be mailed solely to the address of record.

Telephone inquiries relating to this decision should be directed to the undersigned at (571) 272-3204.

[1] The request to apply the issue fee to the new Notice may be satisfied by completing and returning the new Issue Fee Transmittal Form PTOL-85(b), which includes the following language thereon: "Commissioner for Patents is requested to apply the Issue Fee and Publication Fee (if any) or re-apply any previously paid issue fee to the application identified above." Petitioner is advised that, whether a fee is indicated as being due or not, the Issue Fee Transmittal Form **must** be completed and timely submitted to avoid abandonment. Note the language in bold text on the first page of the Notice of Allowance and Fee(s) Due (PTOL-85).

The application is being referred to Technology Center AU 1653 for further processing of the request for continued examination under 37 CFR 1.114 filed April 25, 2005.

Sherry D. Brinkley
Petitions Examiner
Office of Petitions
Office of the Deputy Commissioner
for Patent Examination Policy

cc: CHIRON CORPORATION
4560 HORTON STREET
EMERYVILLE, CA 94608

UNITED STATES PATENT AND TRADEMARK OFFICE

Commissioner for Patents
United States Patent and Trademark Office
P.O. Box 1450
Alexandria, VA 22313-1450
www.uspto.gov

Date : April 25, 2005

TO : Director, Office of Patent Publication

FROM : Office of the Deputy Commissioner for Patent Examination Policy

SUBJECT : Withdrawal from Issue of

Applicant(s) : Robert J. Drummond, et al
Application No. : 10/123,092
Filed : April 11, 2002

The above-identified application has been assigned Patent No. 6,884,780 and an issue date of April 26, 2005.

It is hereby directed that this application be withdrawn from issue at the request of the applicant.

Do not refund the issue fee.

The following erratum should be published in the Official Gazette if the above-identified application is published in the OG of April 26, 2005:

> "All reference to Patent No. 6,884,780 to ROBERT J. DRUMMOND, ET AL of CALIFORNIA for METHOD FOR INCREASING THE SERUM HALF-LIFE OF A BIOLOGICALLY ACTIVE MOLECULE appearing in the Official Gazette of April 26, 2005, should be deleted since no patent was granted."

Sherry D. Brinkley
Petitions Examiner
Office of Petitions
Office of the Deputy Commissioner
for Patent Examination Policy

cc: Paul Harrison, Crystal Park 3-44l (FAX-306-2737)
Deneise Boyd, Crystal Park 2, Suite 1100 (FAX-308-5413)
Mary Louise McAskill, Crystal Park 3-910 (FAX 305-4372)
Niomi Farmer, Crystal Park 3-9l0 (FAX-305-4372)
Mary E. Johnson (Cookie), P/OCS, CM1-6D07
Duane K.Davis, P/OCS, CM1-6A07
Tamara K. Greene, PK3-910

UNITED STATES PATENT AND TRADEMARK OFFICE

Commissioner for Patents
United States Patent and Trademark Office
P.O. Box 1450
Alexandria, VA 22313-1450
www.uspto.gov

CALIPER LIFE SCIENCES, INC.
605 FAIRCHILD DRIVE
MOUNTAIN VIEW CA 94043-2234

COPY MAILED

OCT 28 2005

OFFICE OF PETITIONS

ON PETITION

In re Application of
Michael R. Knapp et al.
Application No. 10/123,100
Filed: April 11, 2002
Attorney Docket No.: 100/11210

This is a decision on the petition filed August 17, 2005 under 37 CFR 1.137(b),[1] to revive the above-identified application.

The petition is **GRANTED**.

This application became abandoned for failure to timely reply to the non-Final Office Action mailed August 10, 2004. A shortened statutory period of three months was set for replying to the non-Final Office Action. No extensions of time having been requested, this application became abandoned November 11, 2004. Accordingly, a Notice of Abandonment was mailed April 5, 2005.

The record reveals that a three month extension of time was filed with the instant petition, however, pursuant to 37 CFR 1.136, an extension of time must be filed prior to the expiration of the maximum period obtainable for reply to avoid abandonment. Accordingly, since the $1020.00 extension of time fee submitted with the petition on August 17, 2005, was subsequent to the maximum period obtainable for reply, this fee is unnecessary and will be credited to counsel's deposit account no. 03-0177.

This matter is being referred to Technology Center 1634 for appropriate action on the amendment filed August 17, 2005.

Telephone inquiries concerning this matter should be directed to the undersigned Petitions Attorney at (571) 272-3212.

Patricia Faison-Ball

Patricia Faison-Ball
Senior Petitions Attorney
Office of Petitions

---

[1] Effective December 1, 1997, the provisions of 37 CFR 1.137(b) now provide that where the delay in reply was unintentional, a petition may be filed to revive an abandoned application or a lapsed patent pursuant to 37 CFR 1.137(b). A grantable petition filed under the provisions of 37 CFR 1.137(b) must be accompanied by:

(1) the required reply, unless previously filed. In a nonprovisional application abandoned for failure to prosecute, the required reply may be met by the filing of a continuing application. In a nonprovisional application filed on or after June 8, 1995, and abandoned for failure to prosecute, the required reply may also be met by the filing of a request for continued examination in compliance with § 1.114. In an application or patent, abandoned or lapsed for failure to pay the issue fee or any portion thereof, the required reply must be the payment of the issue fee or any outstanding balance thereof. In an application abandoned for failure to pay the publication fee, the required reply must include payment of the publication fee.

(2) the petition fee as set forth in 37 CFR 1.17(m);

(3) a statement that the entire delay in filing the required reply from the due date for the reply until the filing of a grantable petition pursuant to 37 CFR 1.137(b) was unintentional. The Commissioner may required additional information where there is a question whether the delay was unintentional; and

(4) any terminal disclaimer (and fee as set forth in 37 CFR 1.20(d)) required pursuant to 37 CFR 1.137(c)).

UNITED STATES PATENT AND TRADEMARK OFFICE

Commissioner for Patents
United States Patent and Trademark Office
P.O. Box 1450
Alexandria, VA 22313-1450
www.uspto.gov

Goodwin Procter LLP
Attn: Patent Administrator
135 Commonwealth Drive
Menlo Park, CA 94025-1105

COPY MAILED

APR 14 2009

OFFICE OF PETITIONS

In re Application of Baker et al. :
Application No. 10/123,108 : Decision on Petition
Filing Date: April 15, 2002 :
Attorney Docket No. GNE-3330 R1C36 :

This is a decision on the petition under 37 CFR 1.181 filed January 23, 2009, requesting the Office withdraw the holding of abandonment.

The petition is **granted**.

Facts

The application and an executed declaration were filed April 15, 2002. The declaration stated correspondence should be sent to:

Ginger R. Dereger, Esq.
Knobbe, Martens, Olson & Bear
201 California Street, #1150
San Francisco, CA 94111-3335

The declaration stated, "As a named inventor, I hereby appoint all Attorney(s) and/or Agent(s) associated with the following Patent Office Issued Customer Number: 09157... Ginger R. Dreger, Registration No. 33,055, Customer No. 30,313."

Only one Customer Number can be designated for a Power of Attorney in an application. One cannot designate both a Customer Number and a separate individual in a Power of Attorney. Therefore, representatives associated with the first listed customer number - 09157 - were the representatives with power of attorney.

A "Correction of Address" was filed October 15, 2002. The Correction of Address requested the Office change the address of record to:

Ginger R. Dreger
Knobbe, Martens, Olson & Bear
2040 Main Street
14th Floor
Irvine, CA 92614.

The October 15, 2002, Correction of Address also requested the address of record be changed to the address associated with Customer Number 30,313. The Correction of Address was signed by Ginger Dreger. As of October 15, 2002, Ginger Dreger was not a representative of record.

The Office did not change the address of record in response to the October 15, 2002 Correction of Address. The Office did not notify applicants that the address would not be changed.

A "Revocation and Power of Attorney and Change of Address" was filed March 12, 2003. The Revocation requested representatives associated with Customer No. 09157 and representatives associated with Customer No. 35489 be given power of attorney to prosecute the application. The Revocation requested the address of record be changed to:

> Ginger R. Dreger
> Heller Ehrman White & McAulliffe LLP
> 275 Middlefield Road
> Menlo Park, CA 94025

The Revocation also requested the address of record be changed to the address associated with Customer No. 35489.

The Revocation was signed by Mark Kresnak as "Section Patent Counsel" for Assignee. 37 CFR 3.73(b)(2) states,

> The submission establishing ownership must show that the person signing the submission is a person authorized to act on behalf of the assignee by:
> (i) Including a statement that the person signing the submission is authorized to act on behalf of the assignee; or
> (ii) Being signed by a person having apparent authority to sign on behalf of the assignee, e.g., an officer of the assignee.

MPEP 324(V) states, with emphasis added,

> The submission establishing ownership must be signed by a party authorized to act on behalf of the assignee. The submission under 37 CFR 3.73(b) may be signed on behalf of the assignee in the following manner if the assignee is an organization (e.g., corporation, partnership, university, government agency, etc.):
> (A) The submission may be signed by a person in the organization having apparent authority to sign on behalf of the organization. 37 CFR 3.73(b)(2)(ii). An officer (chief executive officer, president, vice-president, secretary, or treasurer) is presumed to have authority to sign on behalf of the organization. The signature of the chairman of the board of directors is acceptable, but not the signature of an individual director. Modifications of these basic titles are accept -able, such as vice-president for sales, executive vice-president, assistant treasurer, vice-chairman of the board of directors.... *A person having a title (administrator, general counsel) that does not clearly set forth that person as an officer of the*

assignee is not presumed to have authority to sign the submission on behalf of the assignee....

(B) The submission may be signed by any person, if the submission sets forth that the person signing is authorized (or empowered) to act on behalf of the assignee, i.e., to sign the submission on behalf of the assignee. 37 CFR 3.73(b)(2)(i).

(C) The submission may be signed by a person empowered by an organizational resolution (e.g., corporate resolution, partnership resolution) to sign the submission on behalf of the assignee, if a copy of the resolution is, or was previously, submitted in the record. Where a submission does not comply with (A), (B), or (C) above, evidence of the person's authority to sign will be required.

Since Mark Kresnak was not an officer with apparent authority to sign the Revocation and did not state he was authorized to sign the Revocation on behalf of the assignee, the Revocation was ineffective to change the representatives of record.

Mark Kresnak was an attorney associated with Customer No. 09157. Therefore, he was an attorney of record and the address of record should have been changed to the address associated with Customer No. 35489.

The Office failed to change the address of record.

A reply to an Office action filed January 18, 2005, requested the Office change the address of record to the address associated with Customer No. 35489 and to the following address:

Ginger R. Dreger
Heller Ehrman White & McAulliffe LLP
275 Middlefield Road
Menlo Park, CA 94025

The January 18, 2005 reply was signed by Panpan Gao who was not an attorney of record. The Office did not change the address of record.

A reply to an Office action filed July 14, 2005, requested the Office change the address of record to the address associated with Customer No. 35489 and to the following address:

Ginger R. Dreger
Heller Ehrman White & McAulliffe LLP
275 Middlefield Road
Menlo Park, CA 94025

The July 14, 2005 reply was signed by Panpan Gao who was not an attorney of record. The Office did not change the address of record.

The Office mailed a non-final Office action on October 24, 2006. The Office action set a shortened statutory period for reply of three (3) months.

October 24, 2006 Office action was mailed to:

Ginger R. Dereger, Esq.
Knobbe, Martens, Olson & Bear
Suite 1150
201 California Street
San Francisco, CA 94111

On November 15, 2006, the October 24, 2006 Office action was returned to the Office undelivered by the United States Postal Service.

The Office did not receive a reply to the October 24, 2006 Office action. As a result, a Notice of Abandonment was mailed June 11, 2007. The Notice of Abandonment was mailed to:

Ginger R. Dereger, Esq.
Knobbe, Martens, Olson & Bear
Suite 1150
201 California Street
San Francisco, CA 94111

On June 20, 2007, the Notice of Abandonment action was returned to the Office undelivered by the United States Postal Service.

On November 20, 2008, a Power of Attorney signed by Mark Assignee as Associate General Counsel & Director for the Assignee Genetech, Inc. The Power of Attorney attempted to give power of attorney to representatives associated with Customer Nos. 09157 and 77845. The Power of Attorney also indicated future correspondence should be sent to Customer No. 77845 and indicates future correspondence should be sent to:

Ginger R. Dreger
Goodwin Procter LLP
135 Commonwealth Drive
Menlo Park, CA 94025

Only one Customer Number can be designated for a Power of Attorney in an application. Since the first customer number listed was 09157, the Office should have given power of attorney to the representatives associated with Customer No. 09157. The Office need not determine if an "Associated General Counsel & Director" is an Officer with apparent authority to sign on behalf of the assignee since the representatives associated with Customer No. 09157 already had power of attorney.

In response to the November 20, 2008 Power of Attorney, the Office correctly changed the address to the address associated with Customer No. 77845. However, the Office incorrectly changed records to indicate the representatives of record are the representatives associated with Customer No. 77845.

On January 23, 2009, petitioner filed a petition to withdraw the holding of abandonment. The petition states the October 24, 2006 Office action was never received because it was sent to an incorrect address.

Discussion

The October 24, 2006, Office action was clearly not received as is shown by the fact the Office action was returned undelivered to the Office. A review of the record indicates the Office mailed the Office action to an incorrect address. Therefore, the Notice of Abandonment is hereby vacated and the holding of abandonment withdrawn.

Petitioner submitted a petition fee of $130. A petition fee is not required for a petition to withdraw the holding of abandonment under 37 CFR 1.181. Therefore, the petition fee has been credited back to Deposit Account No. 504634.

Petitioner should note, as of the date of mailing for the instant decision, the representatives of record in this case are the representatives associated with Customer No. 09157, and the address associated with Customer No. 77845.

Technology Center Art Unit 1649 will be informed of the instant decision and the application, including the amendment filed January 23, 2009, will be further examined in due course.

Telephone inquiries regarding this communication should be directed to Petitions Attorney Steven Brantley at (571) 272-3203.

Charles Steven Brantley
Senior Petitions Attorney
Office of Petitions

UNITED STATES PATENT AND TRADEMARK OFFICE

Commissioner for Patents
United States Patent and Trademark Office
P.O. Box 1450
Alexandria, VA 22313-1450
www.uspto.gov

COPY MAILED

JAN 19 2007

OFFICE OF PETITIONS

FISH & RICHARDSON PC
P.O. BOX 1022
MINNEAPOLIS MN 55440-1022

In re Patent No. 7,116,745	:	
Issue Date: October 3, 2006	:	
Application No. 10/123,141	:	NOTICE
Filed: April 17, 2002	:	
Attorney Docket No. 9-15417-6US	:	

This is a notice regarding your request for acceptance of a fee deficiency submission under 37 CFR 1.28. On September 1, 1998, the Court of Appeals for the Federal Circuit held that 37 CFR 1.28(c) is the sole provision governing the time for correction of the erroneous payment of the issue fee as a small entity. **See DH Technology v. Synergystex International, Inc. 154 F.3d 1333, 47 USPQ2d 1865 (Fed. Cir. Sept. 1, 1998).**

The Office no longer investigates or rejects original or reissue applications under 37 CFR 1.56. **1098 Off. Gaz. Pat. Office 502 (January 3, 1989).** Therefore, nothing in this Notice is intended to imply that an investigation was done.

Your fee deficiency submission under 37 CFR 1.28 is hereby **ACCEPTED.**

This application no longer qualifies for small entity status. Accordingly, all future fees in this file must be paid at the large entity rate, absent further notification from a proper party of a change in status. ***See 37 CFR 1.27(c)(2).***

Inquiries related to this communication should be directed to the undersigned at (571) 272-3208.

Karen Creasy

Karen Creasy
Petitions Examiner
Office of Petitions

UNITED STATES PATENT AND TRADEMARK OFFICE

COMMISSIONER FOR PATENTS
UNITED STATES PATENT AND TRADEMARK OFFICE
P.O. BOX 1450
ALEXANDRIA, VA 22313-1450
WWW.USPTO.GOV

Paper No. None

LERNER, DAVID, LITTENBERG,
KRUMHOLZ & MENTLIK
600 SOUTH AVENUE WEST
WESTFIELD NJ 07090

COPY MAILED

JUN 14 2007

OFFICE OF PETITIONS

In re Application of
Ramiro Conde et al.
Application No. 10/123,176
Filed: April 17, 2002
Attorney Docket No.:
221303US2DIV
Title: METHOD AND DEVICE FOR ASSEMBLING OPTICAL COMPONENTS OR AN OPTICAL COMPONENT AND A SUBSTRATE

DECISION ON PETITION
UNDER 37 C.F.R. §1.181

This is a decision on the response filed on February 27, 2007, which is properly treated as a petition pursuant to 37 C.F.R. §1.181, requesting that the holding of abandonment in the above-identified application be withdrawn.

The concurrently filed power of attorney and change of correspondence address has been entered and made of record.

The above-identified application became abandoned for failure to reply within the meaning of 37 C.F.R §1.113 in a timely manner to the final Office action mailed August 4, 2006, which set a shortened statutory period for reply of three months. An after-final amendment was received on December 26, 2006 along with a two-month extension of time, and an advisory action was mailed on January 23, 2007. No further extensions of time under the provisions of 37 C.F.R §1.136(a) were obtained. A statutory disclaimer was received on February 1, 2007, however the submission was improperly signed by an attorney who was not of record. Accordingly, the above-identified application became abandoned on January 5, 2006. A notice of abandonment was mailed on February 26, 2007.

With the present petition, Petitioner has alleged that the application is not abandoned due to the filing of the terminal

disclaimer on February 1, 2007 and a Notice of Appeal which was submitted on February 12, 2007.

Regarding the terminal disclaimer, Petitioner has asserted that his law firm was authorized to file the terminal disclaimer pursuant to MPEP § 405. Petitioner appears to be incorrect: a person who is acting in a representative capacity may not sign a terminal disclaimer.

37 C.F.R. § 1.34 sets forth:

> When a registered patent attorney or patent agent acting in a representative capacity appears in person or signs a paper in practice before the United States Patent and Trademark Office in a patent case, his or her personal appearance or signature shall constitute a representation to the United States Patent and Trademark Office that under the provisions of this subchapter and the law, he or she is authorized to represent the particular party in whose behalf he or she acts. In filing such a paper, the registered patent attorney or patent agent must specify his or her registration number and name with his or her signature. Further proof of authority to act in a representative capacity may be required.

MPEP § 402 states, in part:

> Power of Attorney; Acting in a Representative Capacity
>
> In accordance with 37 CFR 1.34, a paper filed by a registered patent attorney or agent in an application in which he or she is not of record must include his or her name and registration number with his or her signature. <u>Acceptance of papers filed in patent applications and reexamination proceedings by registered attorneys and agents upon a representation that the attorney or agent is authorized to act in a representative capacity is for the purpose of facilitating replies on behalf of applicants in patent applications</u> (emphasis added) and, further, to obviate the need for filing powers of attorney in individual applications or patents when there has been a change in composition of law firms or corporate patent staffs. Interviews with a registered attorney or agent not of record will, in view of 35 U.S.C. 122, be conducted only on the basis of information and files supplied by the attorney or agent. <u>A person acting in a representative capacity may not sign</u> (emphasis added) (A) a power of attorney 37 CFR 1.32(b)(4)), (B) a document granting access to an application (except where an executed oath or declaration has not been filed, and the patent practitioner was named in the papers accompanying the application papers - 37 CFR 1.14(c)), (C) a change of correspondence address (except where an executed oath or declaration has not been filed, and the patent practitioner filed the application - 37 CFR 1.33(a)), (D) <u>a terminal disclaimer</u> (emphasis added) (37 CFR 1.321(b)(1)(iv)), or (E) a request for an express abandonment without filing a continuing application (37 CFR 1.138(b)).

Petitioner both submitted and signed the terminal disclaimer, and this same attorney has represented that he was acting in a representative capacity. As set forth in the portion of the MPEP reproduced above, a person acting in a representative capacity may not sign a terminal disclaimer. Therefore the terminal disclaimer could not have been entered, and the Office properly refused to enter the same.

Regarding the notice of appeal, the electronic file has been reviewed, and it is clear that a notice of appeal was received on February 12, 2007. The notice of appeal contains a certificate of mailing dated February 5, 2007, and it is noted that February 4, 2007 fell on a Sunday. A three-month extension of time has been charged to Petitioner's Deposit, to make timely this response.

Considering the facts and circumstances of the delay at issue, as set forth on petition, it is concluded that Petitioner has met his burden of establishing that a response was timely submitted, pursuant to 37 C.F.R. § 1.8.

Accordingly, the petition under 37 C.F.R. §1.181(a) is **GRANTED**. The holding of abandonment is **WITHDRAWN**.

The Technology Center will be notified of this decision. The Technology Center's support staff will notify the Examiner of this decision, so that the Notice of Appeal of February 12, 2007 and the terminal disclaimer (submitted concurrently with this petition) can be processed.

The Notice of Appeal filed on February 12, 2007, has been entered and made of record. Accordingly, **the two-month period for filing the Appeal Brief, accompanied by the fee required by law, runs from the mailing date of this decision.**

Telephone inquiries regarding *this decision* should be directed to the undersigned at (571) 272-3225. All other inquiries concerning examination procedures or status of the application should be directed to the Technology Center.

Paul Shanoski

Paul Shanoski
Senior Attorney
Office of Petitions
United States Patent and Trademark Office

UNITED STATES PATENT AND TRADEMARK OFFICE

UNITED STATES DEPARTMENT OF COMMERCE
United States Patent and Trademark Office
Address: COMMISSIONER FOR PATENTS
P.O. Box 1450
Alexandria, Virginia 22313-1450
www.uspto.gov

APPLICATION NUMBER	FILING OR 371 (c) DATE	FIRST NAMED APPLICANT	ATTY. DOCKET NO./TITLE
10/123,176	04/17/2002	Ramiro Conde	221303US2DIV

CONFIRMATION NO. 5968

OC000000024279526

22850
OBLON, SPIVAK, MCCLELLAND, MAIER & NEUSTADT, P.C.
1940 DUKE STREET
ALEXANDRIA, VA 22314

Date Mailed: 06/08/2007

NOTICE REGARDING CHANGE OF POWER OF ATTORNEY

This is in response to the Power of Attorney filed 02/27/2007.

- The Power of Attorney to you in this application has been revoked by the assignee who has intervened as provided by 37 CFR 3.71. Future correspondence will be mailed to the new address of record(37 CFR 1.33).

Oblon, Spivak, McClelland, Maier & Neustadt
1940 Duke Street
Alexandria, VA 22314.

Paul M. Office of Petitions

Office of Initial Patent Examination (571) 272-4000, or 1-800-PTO-9199
NEW ATTORNEY/AGENT COPY

UNITED STATES PATENT AND TRADEMARK OFFICE

Commissioner for Patents
United States Patent and Trademark Office
P.O. Box 1450
Alexandria, VA 22313-1450
www.uspto.gov

COPY MAILED
APR 27 2006
OFFICE OF PETITIONS

NIXON & VANDERHYE, PC
901 NORTH GLEBE ROAD, 11TH FLOOR
ARLINGTON VA 22203

In re Application of :
Kazuhide Sato et al :
Application No. 10/123,206 : ON PETITION
Filed: April 17, 2002 :
Attorney Docket No. 461-88 :

This is a decision on the petition, filed April 27, 2006, under 37 CFR 1.313(c)(2) to withdraw the above-identified application from issue after payment of the issue fee.

The petition is **GRANTED**.

The above-identified application is withdrawn from issue for consideration of a submission under 37 CFR 1.114 (request for continued examination). See 37 CFR 1.313(c)(2).

Petitioner is advised that the issue fee paid on January 10, 2006, in the above-identified application cannot be refunded. If, however, the above-identified application is again allowed, petitioner may request that it be applied towards the issue fee required by the new Notice of Allowance.[1]

Telephone inquiries should be directed to the undersigned at (571) 272-3208.

The examiner of Technology Center AU 1734 will consider the request for continued examination under 37 CFR 1.114.

Karen Creasy

Karen Creasy
Petitions Examiner
Office of Petitions

---

[1] The request to apply the issue fee to the new Notice may be satisfied by completing and returning the new Issue Fee Transmittal Form PTOL-85(b), which includes the following language thereon: "Commissioner for Patents is requested to apply the Issue Fee and Publication Fee (if any) or re-apply any previously paid issue fee to the application identified above." Petitioner is advised that, whether a fee is indicated as being due or not, the Issue Fee Transmittal Form **must** be completed and timely submitted to avoid abandonment. Note the language in bold text on the first page of the Notice of Allowance and Fee(s) Due (PTOL-85).

UNITED STATES PATENT AND TRADEMARK OFFICE

COMMISSIONER FOR PATENTS
UNITED STATES PATENT AND TRADEMARK OFFICE
P.O. BOX 1450
ALEXANDRIA, VA 22313-1450
www.uspto.gov

Paper No. _____

Date : April 27, 2006

TO : Director, Office of Patent Publication

FROM : Office of the Deputy Commissioner
for Patent Examination Policy

SUBJECT : Withdrawal from Issue of

Applicant(s) :Kazuhide Sato et al
Application No. :10/123,206
Filed :April 17, 2002

The above-identified application has been assigned Patent No. 7,041,183 and an issue date of May 9, 2006.

It is hereby directed that this application be withdrawn from issue at the request of the applicant.

Do not refund the issue fee.

The following erratum should be published in the Official Gazette if the above-identified application is published in the OG of May 9, 2006:

"All reference to Patent No. 7,041,183 to Kazuhide Sato et al of Japan for METHOD OF PRODUCING A CERAMIC LAMINATE appearing in the Official Gazette of May 9, 2006 should be deleted since no patent was granted."

Karen Creasy

Karen Creasy
Petitions Examiner
Office of Petitions
Office of the Deputy Commissioner
for Patent Examination Policy

cc: Paul Harrison, MDW-4B03,(FAX-273-5468)
Deneise Boyd, MDE-3D39 (FAX-273-5124)
Mary Louise McAskill, ST-8C15 (FAX 305-4372)
Niomi Farmer, ST-8C14 (FAX-305-4372)
Mary E. Johnson (Cookie), MDE-7C71 (FAX 273-0038
Duane Davis P/OPC MDE-7D89

UNITED STATES PATENT AND TRADEMARK OFFICE

Commissioner for Patents
United States Patent and Trademark Office
P.O. Box 1450
Alexandria, VA 22313-1450
www.uspto.gov
Alexandria, VA 22313-1450
www.uspto.gov

MAR - 3 2006

PANPAN GAO
HELLER EHRMAN LLP
275 MIDDLEFIELD ROAD
MENLO PARK, CA 94025

In re Application of	:	
Kevin P. Baker et al	:	
Serial No.: 10/123,214	:	DECISION ON PETITION
Filed: 15 April 2002	:	
Attorney Docket No. 39780-3330R1C40	:	

This letter is in response to the Petition under 37 C.F.R. 1.181, filed 23 January 2006 requesting (1) that the rejections containing the six new references which have been used by the examiner in the Examiner's Answer be designated as new grounds of rejection; (2) that the examiner provide a corrected Examiner's Answer which identifies the rejections as new grounds of rejection; and (3) that prosecution be reopened because of these new grounds of rejection.

BACKGROUND

On 06 August 2004 the examiner mailed to applicants a non-final Office action in which all pending claims 72 - 84 were rejected under 35 USC 101 and 112, first paragraph for lack of utility and lack of enablement. Claims 85 - 87 were also rejected under 35 U.S.C. 102(b) as being anticipated by Jacobson et al, US. Patent No. 5,599,671.

On 02 November 2004 applicants filed an amendment in response to the first action on the merits mailed 06 August 2004. In this amendment applicants canceled claims 80 and 81 and amended claims 72 - 79.

On 25 January 2005 the examiner mailed to applicants a FINAL Office action in which the rejections under 35 U.S.C. 101 and 112, first paragraph, in the first Office action were maintained.

On 21 March 2005 applicants filed an After Final amendment in response to the FINAL rejection of 25 January 2005. On 06 June 2005 the examiner mailed an Advisory Action maintaining all of the rejections of record for the reasons already of record.

On 25 June 2005 applicants filed a Notice of Appeal.

On 23 August 2005 applicants filed an Appeal Brief.

On 29 November 2005 the examiner mailed to applicants an Examiner's Answer.

On 23 January 2006 applicants filed a Reply Brief.

On 23 January 2006 applicants filed this instant Petition under 37 C.F.R. 1.181 requesting that (1) the grounds of rejection involving six new references be designation a new grounds of rejection; (2) a corrected Examiner's Answer be sent out indicating these new grounds of rejection; and (3) prosecution be reopened.

DISCUSSION

In his Examiner's Answer the examiner relied extensively on six new references in order to support the lack of utility and lack of enablement rejections. These new references are:

Saito-Hisaminato et al., 202 DNA Res. 9 : 35 - 45.
Bustin, 2002, TRENDS in Molec. Med. 8(6): 269 - 272.
Anderson et al, 1997, Electrophoresis 18 : 533 - 537.
Kawamoto et al., 1996, Mole Cell. Biol. 174:151 - 158.
Lian et al., 2001, Blood 98: 513 - 537.
Fessler et al., 2003, J. Biol. Chem. 277: 31391 - 31302.

The statutory basis of the rejections (35 U.S.C. 101 and 112, first paragraph) in the Examiner's Answer did not change from the FINAL Office action mailed to applicant on 25 January 2005. However, it is clear that the examiner used the additional six new references to reinforce these rejections and rebut more thoroughly applicants' arguments. While applicants did respond to these new arguments based on the new references used by the examiner in the Examiner's Answer in their Reply Brief, they argue that they have been placed at a disadvantage because they have not been able to present substantive evidence of their own for the record.

DECISION

For the above reasons, the petition under 37 C.F.R. 1.181 requesting (1) that the rejections containing the six new references which have been used in the Examiner's Answer be designated as new grounds of rejection; (2) that the Examiner provide a corrected Examiner's Answer which identifies the rejections as new grounds of rejections; and (3) that the FINALITY be withdrawn and that prosecution be reopened because of these new grounds of rejection are **GRANTED-IN-PART.**

Applicants' first request that the rejections in the Examiner's Answer be designated as containing "new grounds of rejection" is **GRANTED**.

Applicants' second request has been effectively granted by this Decision on Petition designating the rejections in the Examiner's Answer to be "new grounds of rejection."

The further request for the corrected Examiner's Answer is deemed to be moot in view of this Decision on Petition and therefore, **DISMISSED**.

Applicants' third request to have the FINALITY of the application withdrawn and prosecution reopened is **GRANTED**.

Applicants are given ONE MONTH (non-extendable) time period from the date of mailing of this Decision on Petition in which to submit any additional exhibits or affidavits necessary in order to rebut the examiner's new grounds of rejection presented in the Examiner's Answer.

This application is being returned to the examiner for consideration of the Reply Brief which will be treated as a response to a non-Final Office action and any other exhibits or arguments which may be timely submitted.

Applicants have been charged a fee of $130.00 for this petition. However, since there should be no charge for this petition, this $130.00 will be credited to applicants' Deposit Account No. 08-1641.

Should there by any questions regarding this decision, please contact Special Program Examiner, William R. Dixon, Jr. by letter addressed to Director, TC 1600, at the address listed above, or by telephone at 571-272-0519 or by facsimile sent to the general Office facsimile number, 571-273-8300.

George C. Elliott
Director, Technology Center 1600

UNITED STATES PATENT AND TRADEMARK OFFICE

MAR - 3 2006

Commissioner for Patents
United States Patent and Trademark Office
P.O. Box 1450, Alexandria, VA 22313-1450
www.uspto.gov

PANPAN GAO
HELLER EHRMAN LLP
275 MIDDLEFIELD ROAD
MENLO PARK, CA 94025

In re Application of	:
Kevin P. Baker et al	:
Serial No.: 10/123,215	: DECISION ON PETITION
Filed: 15 April 2002	:
Attorney Docket No. 39780-3330R1C41	:

This letter is in response to the Petition under 37 C.F.R. 1.181, filed 23 January 2006 requesting (1) that the rejections containing the six new references which have been used by the examiner in the Examiner's Answer be designated as new grounds of rejection; (2) that the examiner provide a corrected Examiner's Answer which identifies the rejections as new grounds of rejection; and (3) that prosecution be reopened because of these new grounds of rejection.

BACKGROUND

On 30 July 2004 the examiner mailed to applicants a non-final Office action in which all pending claims 72 - 77 were rejected under 35 USC 101 and 112, first paragraph for lack of utility and lack of enablement and under 35 USC 103(a) as being obvious over several references.

On 29 October 2004 applicants filed an amendment in response to the first Office action on the merits mailed 30 July 2004. In this amendment applicants canceled claim 77 and amended claims 72 and 75.

On 25 January 2005 the examiner mailed to applicants a FINAL Office action in which all of the rejections in the first Office action were maintained.

On 22 March 2005 applicants filed an After Final amendment in response to the FINAL rejection of 25 January 2005.

On 03 June 2005 the examiner mailed an Advisory Action maintaining all of the rejections of record for the reasons already of record. On 23 June 2005 applicants filed a Notice of Appeal. On 16 September 2005 applicants filed an Appeal Brief.

On 29 November 2005 the examiner mailed to applicants an Examiner's Answer.

On 23 January 2006 applicants filed a Reply Brief.

On 23 January 2006 applicants filed this instant Petition under 37 C.F.R. 1.181 requesting that (1) the grounds of rejection involving six new references be designation a new grounds of rejection; (2) a corrected Examiner's Answer be sent out indicating these new grounds of rejection; and (3) prosecution be reopened.

DISCUSSION

In his Examiner's Answer the examiner relied extensively on six new references in order to support the lack of utility and lack of enablement rejections. These new references are:

Saito-Hisaminato et al., 202 DNA Res. 9 : 35 - 45.
Bustin, 2002, TRENDS in Molec. Med. 8(6): 269 - 272.
Anderson et al, 1997, Electrophoresis 18 : 533 - 537.
Kawamoto et al., 1996, Mole Cell. Biol. 174:151 - 158.
Lian et al., 2001, Blood 98: 513 - 537.
Fessler et al., 2003, J. Biol. Chem. 277: 31391 - 31302.

The statutory basis of the rejections (35 U.S.C. 101 and 112, first paragraph) in the Examiner's Answer did not change from the FINAL office action mailed to applicants on 25 January 2005. However, it is clear that the examiner used the additional six new references to reinforce these rejections and rebut more thoroughly applicants' arguments. While the applicants did respond to these new arguments based on the new references used by the examiner in the Examiner's Answer in their Reply Brief, they argue that they have been placed at a disadvantage because they have not been able to present additional substantive evidence of their own for the record.

DECISION

For the above reasons, the petition under 37 C.F.R. 1.181 requesting (1) that the rejections containing the six new references which have been used in the Examiner's Answer be designated as new grounds of rejection; (2) that the Examiner provide a corrected Examiner's Answer which identifies the rejections as new grounds of rejections; and (3) that the FINALITY be withdrawn and that prosecution be reopened because of these new grounds of rejection is **GRANTED-IN-PART.**

Applicants' first request that the rejections in the Examiner's Answer be designated "new grounds of rejection" is **GRANTED**.

Applicants' second request has been effectively granted by this Decision on Petition designating the rejections in the Examiner's Answer to be "new grounds of rejection." The further request for the corrected Examiner's Answer is deemed to be moot in view of this Decision on Petition and therefore, **DISMISSED**.

Applicants' third request to have the FINALITY of the application withdrawn and prosecution reopened is **GRANTED**.

Applicants are given a ONE MONTH (non-extendable) time period from the mailing date of this Decision on Petition in which to submit any additional exhibits or affidavits necessary in order to rebut the examiner's new grounds of rejection presented in the Examiner's Answer.

This application is being returned to the examiner so that he can issue a new Office action responding to the arguments in the Reply Brief and any additional evidence which may be timely provided by applicants. The Reply Brief along with any subsequent evidence submitted will be considered as a response to the new grounds of rejection in the Examiner's Answer which will be treated effectively as a non-final rejection.

Applicants have been charged a fee of $130.00 for this petition. However, since there should be no charge for this petition, this $130.00 will be credited to applicants' Deposit Account No. 08-1641.

Should there by any questions regarding this decision, please contact Special Program Examiner, William R. Dixon, Jr. by letter addressed to Director, TC 1600, at the address listed above, or by telephone at 571-272-0519 or by facsimile sent to the general Office facsimile number, 571-273-8300.

George C. Elliott

George C. Elliott
Director, Technology Center 1600

UNITED STATES PATENT AND TRADEMARK OFFICE

Commissioner for Patents
United States Patent and Trademark Office
P.O. Box 1450
Alexandria, VA 22313-1450
www.uspto.gov

MAIL

SEP 22 2005

DIRECTOR OFFICE
TECHNOLOGY CENTER 2600

SUPERVISOR, PATENT PROSECUTION SERVICES
PIPER RUDNICK LLP
1200 NINETEENTH STREET, N.W.
WASHINGTON, D.C. 20036-2412

In re Application of)
Galia Steinbach, et al.)
Application No. 10/123,218)
Filed: April 17, 2002)
For: BEYONDGUIDE TM METHOD AND)
SYSTEM

DECISION ON REQUEST TO WITHDRAW FROM RECORD

This is a decision on the Request for Withdrawal as attorney or agent and change of address filed on August 16, 2005.

A grantable request to withdraw as attorney/agent of record must:
(1) indicate the present mailing address of the attorney(s)/agent(s) who seek(s) to withdraw, and
(2) be signed by each attorney/agent seeking to withdraw or clearly be signed on their behalf, and
(3) be *approved* at least thirty (30) days prior to the maximum extendable period for response to any outstanding Office Action, and
(4) indicate the address to which future correspondence should be mailed.

Petitioner has not met item (3) above.

Accordingly, the request is **DENIED**.

All attorneys of record remain of record.

A courtesy copy of this decision will be sent to the address listed below which was provided by the attorneys requesting withdraw. However, all future communications from the Office will continue to be directed to the above-listed address until otherwise notified by applicant. Applicant is reminded of the obligation to promptly notify the Patent and Trademark Office of any change in correspondence address to ensure receipt of all communications from the office.

Kenneth A. Wieder

Kenneth Wieder
Special Program Examiner
Technology Center 2600
Communications
(571) 272-2986

CC: YECHIAM HALEVY
BEYONDGUIDE, INC.
17 H'PRACHIM STREET
RA'ANANA ISRAEL 43399

SCANI **Please forward case and paper to address shown below.**

SPE RESPONSE FOR CERTIFICATE OF CORRECTION

DATE : 10/29/08 Paper No.: _____

TO SPE OF : ART UNIT 2856 Hezron Williams (Spe)

SUBJECT : Request for Certificate of Correction for Appl. No.: 10/123220 Patent No.: RE40347

Please respond to this request for a certificate of correction within 7 days.

Please review the requested changes/corrections as shown in the attached certificate of correction. Please complete this form (see below) and forward it with the file to:

Certificates of Correction Branch (CofC)
South Tower - 9A22
Palm Location 7580

HENRY RANDALL
Certificates of Correction Branch
703-308-9390 ext. _____

Thank You For Your Assistance

The request for issuing the above-identified correction(s) is hereby:

Note your decision on the appropriate box.

- [X] Approved — All changes apply.
- [ ] Approved in Part — Specify below which changes do not apply.
- [ ] Denied — State the reasons for denial below.

Comments: _____

HEZRON WILLIAMS
SUPERVISORY PATENT EXAMINER
TECHNOLOGY CENTER 2800

Hezron E. Williams — SPE

2856 — Art Unit

PTOL-306 (REV. 7/03)

U.S. DEPARTMENT OF COMMERCE Patent and Trademark Office

UNITED STATES PATENT AND TRADEMARK OFFICE

COMMISSIONER FOR PATENTS
UNITED STATES PATENT AND TRADEMARK OFFICE
P.O. BOX 1450
ALEXANDRIA, VA 22313-1450
www.uspto.gov

MAIL Paper No.10

OBLON, SPIVAK, MCCLELLAND, MAIER & NEUSTADT, P.C.
1940 DUKE STREET
ALEXANDRIA VA 22314

MAY 07 2004

DIRECTOR OFFICE
TECHNOLOGY CENTER 2600

In re Application of
Fujise, et al.
Application No. 10/123,254
Filed: April 17, 2002
For: **MULTIMODE SERVICE RADIO COMMUNICATION METHOD AND APPARATUS**

DECISION ON PETITION
TO WITHDRAW HOLDING OF
ABANDONMENT

This is a decision on request to withdraw holding of abandonment which is treated as a Petition to Withdraw Holding of Abandonment pursuant to MPEP § 711.03(c)(l) and 37 C.F.R.§ 1.181(a), filed November 18, 2003. No fee is required.

The petition is **GRANTED**.

This application became abandonment for failure to timely file a proper response to the non-final Office action mailed April 24, 2003 which set a shortened statutory period of three (3) months to reply. That period lapsed without reply, rendering this application abandoned as July 24, 2003. A Notice of Abandonment was mailed on November 18, 2003.

Petitioner alleges to have timely filed a response to the non-final Office action on July 24, 2003. To support this position, Petitioner has included with the instant petition, a copy of a postcard receipt date stamped as received on July 24, 2003 and which itemizes among other items, an amendment, terminal disclaimer and a check for $110.00. Copies of the documents have also been submitted. The $110.00 has been recorded in the as fees paid to the application file. An associate power of attorney is also submitted with the petition.

The original correspondence filed was not matched with the file and cannot be located. However, M.P.E.P. § 503 states, "[a] post card receipt which itemizes and properly identifies the papers which are being filed serves as *prima facie* evidence of receipt in the U.S.PTO of all the items listed thereon on the date stamped thereon by the PTO." Accordingly, it is concluded that the response was timely filed in the Patent and Trademark Office but not matched with the application file.

In view of the above stated reasons, the Notice of Abandonment is hereby vacated and the holding of abandonment withdrawn.

The application file is being forwarded to the Technology Center's technical support staff for entry of the copy of the amendment, formal drawings, extension of time and associate power of attorney submitted with the petition. From there, the application file will be forwarded to the examiner for appropriate action in due course.

Dwayne D. Bost
Special Program Examiner
Technology Center 2600
Communications

UNITED STATES PATENT AND TRADEMARK OFFICE

COMMISSIONER FOR PATENTS
UNITED STATES PATENT AND TRADEMARK OFFICE
P.O. BOX 1450
ALEXANDRIA, VA 22313-1450
www.uspto.gov

#13

OBLON, SPIVAK, MCCLELLAND, MAIER & NEUSTADT, P.C.
1940 DUKE STREET
ALEXANDRIA VA 22314

MAIL

NOV 05 2004

DIRECTOR OFFICE
TECHNOLOGY CENTER 2600

In Re Application:
FUJISE, MASAYUKI, et al
Appl No. 10/123,254
Filed: April 17, 2002
Title: **MULTIMODE SERVICE RADIO COMMUNICATION METHOD AND APPARATUS**

WITHDRAW FROM ISSUE
FEE PAID

?

The above-identified application is withdrawn from issue after payment of the issue fee due to the proper filing of a Request for Continued Examination. See 37 CFR 1.313(c)(2).

The above-identified application is hereby withdrawn from issue.

The issue fee is refundable upon written request. If, however, the application is again found allowable, the issue fee can be applied toward payment of the issue fee in the amount identified on the new Notice of Allowance and Issue Fee Due upon written request. This request and any balance due must be received on or before the due date noted in the new Notice of Allowance in order to prevent abandonment of the application.

Telephone inquiries should be directed to Edward Urban 703-305-4385.

The above-identified application is being forwarded to the examiner for prompt appropriate action, including notifying applicant of the new status of this application.

Reinhard Eisenzopf
Acting, Director TC 2600
Communications

#14

UNITED STATES PATENT AND TRADEMARK OFFICE

COMMISSIONER FOR PATENTS
UNITED STATES PATENT AND TRADEMARK OFFICE
P.O. BOX 1450
ALEXANDRIA, VA 22313-1450
www.uspto.gov

MAIL

NOV 23 2004

DIRECTOR OFFICE
TECHNOLOGY CENTER 2600

(Remailed)

OBLON, SPIVAK, MCCLELLAND, MAIER & NEUSTADT, P.C.
1940 DUKE STREET
ALEXANDRIA VA 22314

In Re Application:
FUJISE, MASAYUKI, et al
Appl No. 10/123,254
Filed: April 17, 2002
Title: **MULTIMODE SERVICE RADIO COMMUNICATION METHOD AND APPARATUS**

WITHDRAW FROM ISSUE
FEE PAID

The above-identified application is withdrawn from issue after payment of the issue fee due to unpatentability of one or more claims. See 37 CFR 1.313(b)(3).

The above-identified application is hereby withdrawn from issue.

The issue fee is refundable upon written request. If, however, the application is again found allowable, the issue fee can be applied toward payment of the issue fee in the amount identified on the new Notice of Allowance and Issue Fee Due upon written request. This request and any balance due must be received on or before the due date noted in the new Notice of Allowance in order to prevent abandonment of the application.

Telephone inquiries should be directed to Edward Urban 703-305-4385.

The above-identified application is being forwarded to the examiner for prompt appropriate action, including notifying applicant of the new status of this application.

Reinhard Eisenzopf

Reinhard Eisenzopf
Acting, Director TC 2600
Communications

SPE RESPONSE FOR CERTIFICATE OF CORRECTION

Paper No.: —

DATE : 1/25/08

TO SPE OF : ART UNIT 2685

SUBJECT : Request for Certificate of Correction for Appl. No.: 10/123254 Patent No: 6973304 B2

A response is requested with respect to a request for a certificate of correction.

With respect to the change(s) requested to correct Office and/or Applicant's errors, should the patent read as shown in the certificate of correction attached herewith or the COCIN document(s), in IFW images for the above-identified patented application? No new matter should be introduced, nor should the scope or meaning of the claims be changed.

If the response is for an IFW, within 7 days, please complete and forward the response, to the employee (named below) via scanning into application images, using document code **COCX**.

If the response is for a paper file wrapper, please complete the response and forward the response with the paper file wrapper, to the employee (named below), within 7 days, to:

Certificates of Correction Branch (CofC)
South Tower - 9A22
Palm Location 7580

VIRGINIA TOLBERT
Certificates of Correction Branch
703-308-9390 ext. 113

Thank You For Your Assistance

The request for issuing the above-identified correction(s) is hereby:
Note your decision on the appropriate box.

- ☒ **Approved** — All changes apply.
- ☐ **Approved in Part** — Specify below which changes **do not** apply.
- ☐ **Denied** — State the reasons for denial below.

Comments: OK to enter. No new matter presented.

/DUC NGUYEN/ — **SPE**

2618 — **Art Unit**

UNITED STATES PATENT AND TRADEMARK OFFICE

COMMISSIONER FOR PATENTS
UNITED STATES PATENT AND TRADEMARK OFFICE
P.O. BOX 1450
ALEXANDRIA, VA 22313-1450
WWW.USPTO.GOV

Paper No. 10

Guy R. Gosnell
Alston & Bird LLP
Bank of America Plaza
101 South Tryon Street, Suite 4000
Charlotte, NC 28280-4000

COPY MAILED

JUN 19 2003

OFFICE OF PETITIONS

In re Application of
Erland Wittkotter et al.
Application No. 10/123,266
Filed: May 2, 2002

ON PETITION

This is a decision on the petition filed February 20, 2003 under 37 CFR 1.78(a)(3), to accept an unintentionally delayed claim under 35 U.S.C. § 365(c) for the benefit of prior-filed International Application No. PCT/EP00/10256 filed October 18, 2000.

The petition is **DISMISSED.**

A petition for acceptance of a claim for late priority under 37 CFR 1.78(a)(3) is only applicable to those applications filed on or after November 29, 2000. Further, the petition is appropriate only after the expiration of the period specified in 37 CFR 1.78(a)(2). In addition, the petition under 37 CFR 1.78(a)(3) must be accompanied by:

(1) the reference required by 35 U.S.C. § 120 and 37 CFR 1.78(a)(2) of the prior-filed application, unless previously submitted;[1]

(2) the surcharge set forth in §1.17(t); and

(3) a statement that the entire delay between the date the claim was due under 37 CFR 1.78(a)(2) and the date the claim was filed was unintentional. The Commissioner may require additional information where there is a question whether the delay was unintentional.

The instant pending application was filed on April 16, 2002 and was copending with the above-noted, prior filed international application, at the time of filing, for which priority is

[1]Any nonprovisional application or international application designating the United States of America claiming the benefit of one or more prior-filed copending applications or international applications designating the United States of America must contain or be amended to contain a reference (amendment to the first line of the specification following the title or in an application data sheet (ADS)) to each such prior filed application, identifying it by application number (consisting of the series code and serial number) or international application number and international filing date and indicating the relationship of the applications. Cross references to others related applications may be made when appropriate (see § 1.14).

claimed. A reference to the above-noted, prior-filed international application has been included in an amendment to the first sentence of the specification following the title which was filed concurrently with the instant petition under 37 CFR 1.78(a)(3).

The above reference to the above-noted, prior-filed international application was not included in the manner specified in 37 CFR 1.78(a)(2) (i.e. , in an ADS or in an amendment to the first sentence following the title of the specification) or filed within the period specified in 37 CFR 1.78(a)(2).

A reference to add the above-noted, prior-filed applications on page one following the first sentence of the specification has been included in an amendment filed on February 20, 2003. However, the amendment is not acceptable as drafted since it improperly incorporates by reference the prior application. Petitioner's attention is directed to Dart Industries v. Banner, 636 F.2d 684, 207 USPQ 273 (C.A.D.C. 1980), where the court drew a distinction between a permissible 35 U.S.C. § 120 statement and the impermissible introduction to new matter by way of incorporation by reference in a 35 U.S.C. § 120 statement. The court specifically stated"

> Section 120 merely provides a mechanism whereby an application becomes entitled to benefit of the filing date of an earlier application disclosing the same subject matter. Common subject matter must be disclosed, in both applications, either specifically, or by an express incorporation-by-reference of prior disclosed subject matter. Nothing in section 120 itself operates to carry forward any disclosure from an earlier application. In re deSeversky, supra at 674, 177 USPQ at 146-147. Section 120 contains no magical disclosure-augmenting powers able to pierce new matter barriers. It cannot, therefore, "limit" the absolute and express prohibition against new matter contained in section 251.

Accordingly, before the petition under 37 CFR 1.78(a)(3) can be granted, a substitute amendment deleting the incorporation by reference statement is required.

Additionally, there is no indication that petitioner herein was ever empowered to prosecute the instant application. If petitioner desires to receive future correspondence regarding this application, the appropriate power of attorney documentation must be submitted. A courtesy copy of this decision will be mailed to petitioner. However, all future correspondence will be directed to the address of record until such time as appropriate instructions are received to the contrary.

Further correspondence with respect to this matter should be addressed as follows:

By mail: Mail Stop Petitions
Commissioner for Patents
P.O. Box 1450
Alexandria VA 22313-1450

By FAX: (703) 308-6916
Attn: Office of Petitions

By hand: Crystal Plaza Four, Suite 3C23
2201 S. Clark Place
Arlington, VA

Telephone inquiries concerning this matter may be directed to Senior Petitions Attorney Patricia Faison-Ball in the Office of Petitions at (703) 305-4497.

Beverly Flanagan
Supervisory Petitions Examiner
Office of Petitions

cc:
Guy R. Gosnell
Alston & Bird LLP
Bank of America Plaza
101 South Tryon Street, Suite 4000
Charlotte, NC 28280-4000

UNITED STATES PATENT AND TRADEMARK OFFICE

COMMISSIONER FOR PATENTS
UNITED STATES PATENT AND TRADEMARK OFFICE
P.O. BOX 1450
ALEXANDRIA, VA 22313-1450
WWW.USPTO.GOV

Paper No. 9

Alston & Bird LLP
Bank of America Plaza
101 South Tryon Street, Suite 4000
Charlotte, NC 28280-4000

COPY MAILED

JUL 0 9 2003

OFFICE OF PETITIONS

In re Application of
Erland Wittkotter et al.
Application No. 10/123,266
Filed: May 2, 2002
Attorney Docket No. 047347/259573

ON PETITION

This is a decision on the renewed petition filed June 30, 2003, by facsimile transmission, under 37 CFR 1.78(a)(3), to accept an unintentionally delayed claim under 35 U.S.C. § 365(c) for the benefit of prior-filed International Application No. PCT/EP00/10256 filed October 18, 2000.

The petition is **GRANTED.**

A petition for acceptance of a claim for late priority under 37 CFR 1.78(a)(3) is only applicable to those applications filed on or after November 29, 2000. Further, the petition is appropriate only after the expiration of the period specified in 37 CFR 1.78(a)(2). In addition, the petition under 37 CFR 1.78(a)(3) must be accompanied by:

(1) the reference required by 35 U.S.C. § 120 and 37 CFR 1.78(a)(2) of the prior-filed application, unless previously submitted;[1]

(2) the surcharge set forth in §1.17(t); and

(3) a statement that the entire delay between the date the claim was due under 37 CFR 1.78(a)(2) and the date the claim was filed was unintentional. The Commissioner may require additional information where there is a question whether the delay was unintentional.

---

[1]Any nonprovisional application or international application designating the United States of America claiming the benefit of one or more prior-filed copending applications or international applications designating the United States of America must contain or be amended to contain a reference (amendment to the first line of the specification following the title or in an application data sheet (ADS)) to each such prior filed application, identifying it by application number (consisting of the series code and serial number) or international application number and international filing date and indicating the relationship of the applications. Cross references to others related applications may be made when appropriate (see § 1.14).

The instant pending application was filed on April 16, 2002 and was copending with the above-noted, prior filed international application, at the time of filing, for which priority is claimed. A reference to the above-noted, prior-filed international application has been included in an amendment to the first sentence of the specification following the title which was filed concurrently with the instant renewed petition under 37 CFR 1.78(a)(3).

The instant nonprovisional application was filed after November 29, 2000, and the claim for priority herein is submitted after expiration of the period specified in 37 CFR 1.78(a)(2). Also, the reference to the prior-filed International Application was submitted during the pendency of the International application for which the benefit is sought. *See* 35 U.S.C. § 120. Accordingly, having found that the instant petition satisfies the conditions of 37 CFR 1.78(a)(3) for acceptance of an unintentionally delayed claim for priority under 35 U.S.C. § 120, the petition to accept an unintentionally delayed claim of benefit to prior-filed International Application No. PCT/EP00/10256

A corrected Filing Receipt which includes the priority claim to the above-noted prior-filed international application, and the publication date of October 16, 2003, for the instant application accompanies this decision on petition.

Telephone inquiries concerning this matter may be directed to Senior Petitions Attorney Patricia Faison-Ball in the Office of Petitions at (703) 305-4497.

Beverly Flanagan
Supervisory Petitions Examiner
Office of Petitions

UNITED STATES PATENT AND TRADEMARK OFFICE

Commissioner for Patents
United States Patent and Trademark Office
P.O. Box 1450
Alexandria, VA 22313-1450
www.uspto.gov

ALSTON & BIRD LLP
BANK OF AMERICA PLAZA
101 SOUTH TRYON STREET, SUITE 4000
CHARLOTTE NC 28280-4000

COPY MAILED

OCT 20 2004

OFFICE OF PETITIONS

ON PETITION

In re Application of :
Erland Wittkotter :
Application No. 10/123,266 :
Filed: April 16, 2002 :
Attorney Docket No. 047347/259573 :

This is a decision on the petition filed under 37 CFR 1.137(a)[1] on July 23, 2004, to revive the above-identified application.

The petition is **GRANTED**.

This application became abandoned for failure to timely file a proper reply to the non-Final Office Action mailed September 25, 2003. This application became abandoned December 26, 2003. Accordingly, a Notice of Abandonment was mailed June 8, 2004.

Petitioner claims that the response was in fact timely filed with a request for a 3 month extension of time. In support of petitioner's claim is a copy of petitioner's request for a 3 month extension of time, an amendment, post card receipt date-stamped by the USPTO on March 29, 2004 acknowledging receipt of the Petition for Extension of Time and Amendment, and the cancelled check in the amount of $475.00 for the extension of time request.

A review of the file reveals that the request for a 3 month extension of time was properly docketed in the USPTO and the fee applied to the finance records, but that the Amendment must have become separated from the other documents. Additionally, the reply included a certificate of mail dated March 25, 2004, pursuant to 37 CFR 1.8.

This application is being forwarded to Technology Center 3621 for appropriate action on the amendment filed March 25, 2004 in response to the non-Final Office Action mailed September 25, 2003.

Telephone inquiries concerning this matter may be directed to the undersigned Petitions Attorney at (571) 272-3212.

Patricia Faison-Ball
Senior Petitions Attorney
Office of Petitions

---

[1] A grantable petition under 37 CFR 1.137(a) must be accompanied by:

(1) the required reply, unless previously filed; In a nonprovisional application abandoned for failure to prosecute, the required reply may be met by the filing of a continuing application. In a nonprovisional utility or plant application filed on or after June 8, 1995, and abandoned for failure to prosecute, the required reply may also be met by the filing of a request for continued examination in compliance with § 1.114. In an application or patent, abandoned or lapsed for failure to pay the issue fee or any portion thereof, the required reply must be the payment of the issue fee or any outstanding balance thereof.

(2) the petition fee as set forth in 37 CFR 1.17(l);

(3) a showing to the satisfaction of the Commissioner that the entire delay in filing the required reply from the due date for the reply until the filing of a grantable petition pursuant to 37 CFR 1.137(a) was unavoidable; and

(4) any terminal disclaimer (and fee as set forth in 37 CFR 1.20(d)) required pursuant to 37 CFR 1.137(c)).

UNITED STATES PATENT AND TRADEMARK OFFICE

UNITED STATES DEPARTMENT OF COMMERCE
United States Patent and Trademark Office
Address: COMMISSIONER FOR PATENTS
P.O. Box 1450
Alexandria, Virginia 22313-1450
www.uspto.gov

FROMMER LAWRENCE & HAUG
745 FIFTH AVENUE- 10TH FL.
NEW YORK, NY 10151

Mail Date: 04/21/2010

Applicant	: Jiro Kitayama	: DECISION ON REQUEST FOR
Patent Number	: 7590586	: RECALCULATION of PATENT
Issue Date	: 09/15/2009	: TERM ADJUSTMENT IN VIEW
Appliction No	: 10/123,267	: OF WYETH AND NOTICE OF INTENT TO
Filed	: 04/15/2002	: ISSUE CERTIFICATE OF CORRECTION
		:

The Request for Recalculation is **GRANTED** to the extent indicated.

The patent term adjustment has been determined to be **1626** days. The USPTO will *sua sponte* issue a certificate of correction reflecting the amount of PTA days determined by the recalculation.

Prior to the issuance of the certificate of correction, the USPTO will afford patentee an opportunity to be heard and request reconsideration. Accordingly, patentee has **one month or thirty (30) days**, whichever is longer, to file a request for reconsideration of this patent term adjustment calculation. See 35 U.S.C. 154(b)(3)(B)(ii) and 37 CFR 1.322(a)(4). No extensions of time will be granted under 37 CFR 1.136.

Patentee should use document code PET.OP if electronically filing a request for reconsideration of this patent term adjustment calculation. The patentee must also include the information required by 37 CFR 1.705(b)(2) and the fee required by 37 CFR 1.18(e). If patentee does not file a timely request for reconsideration of this patent term adjustment calculation including the information required by 37 CFR 1.705(b)(2) and the fee required by 37 CFR 1.18(e), the USPTO will issue a certificate of correction reflecting the PTA determination noted above.

Patentee should be aware that in order to preserve the right to review in the United States District Court for the District of Columbia of the USPTO patent term adjustment determination, patentee must ensure that he or she also take the steps required under 35 U.S.C. 154(b)(4)(A) in a timely manner. Nothing in the request for recalculation should be construed as providing an alternative time frame for commencing a civil action under 35 U.S.C. 154(b)(4)(A).

Any questions concerning this decision should be directed to the Office of Patent Legal Administration at 571-272-7702.

UNITED STATES PATENT AND TRADEMARK OFFICE

Commissioner for Patents
United States Patent and Trademark Office
P.O. Box 1450
Alexandria, VA 22313-1450
www.uspto.gov

MCDERMOTT WILL & EMERY LLP
600 13TH STREET, N.W.
WASHINGTON DC 20005-3096

COPY MAILED
AUG 12 2008

In re Application of	:	
Fukuda et al.	:	
Application No. 10/123,285	:	DECISION ON PETITION
Filed: April 17, 2002	:	
Patent No. 6,897,230	:	
Issued: May 24, 2005	:	
Attorney Docket No. 50193-115	:	

This is a decision on the request under 37 CFR 3.81(b)[1] filed March 15, 2007 to correct the name of the assignee on the front page of the above-identified patent by way of a Certificate of Correction.

The request is **GRANTED**.

Petitioner indicates that the correct assignees are both Kyorin Pharmaceutical Co., LTD. and Merck & Co., Inc., and that Merck & Co., Inc. was incorrectly omitted from the Fee(s) Transmittal form PTOL-85(b) at the time of payment of the issue fee. Accordingly, petitioner requests that a certificate of correction be issued to reflect the correct assignees on the front page of the Letters Patent in the patent to be issued from the application.

37 CFR 3.81(b), effective June 25, 2004, reads:

> *After payment of the issue fee:* Any request for issuance of an application in the name of the assignee submitted after the date of payment of the issue fee, and any request for a patent to be corrected to state the name of the assignee, must state that the assignment was submitted for recordation as set forth in § 3.11 before issuance of the patent, and must include a request for a certificate of correction under § 1.323 of this chapter (accompanied by the fee set forth in § 1.20(a) and the processing fee set forth in § 1.17(i) of this chapter.

[1] *See* MPEP 1309, subsection II; and Official Gazette of June 22, 2004.

The request was accompanied by a certificate of correction (and fee) as required by 3.81(b). Further, Office assignment records reflect that Kyorin Pharmaceutical Co., LTD. and Merck & Co., Inc. are the assignees of record, which assignment was submitted for recordation as set forth in § 3.11 before issuance of the patent. Accordingly, as the request complies with the provisions of 37 CFR 3.81(b), it would be appropriate for a certificate of correction to be processed after issuance of this application into a patent.

Telephone inquiries concerning this decision should be directed to Christopher Bottorff at (571) 272-6692. Inquiries regarding the issuance of a certificate of correction should be directed to the Certificate of Correction Branch at (571) 272-4200.

The Certificates of Correction Branch will be notified of this decision granting the petition under 37 CFR 3.81(b) and directing issuance of the requested Certificate of Correction.

David Bucci
Petitions Examiner
Office of Petitions

23 MAR 2005

UNITED STATES PATENT AND TRADEMARK OFFICE

Commissioner for Patents
United States Patent and Trademark Office
P.O. Box 1450
ALEXANDRIA, VA 22313-1450
www.uspto.gov

Olga Hinds
P.O. Box 155
Paso Robles, CA 93446

In re Application of	:	
Milanich	:	
Application No.: 10/123,286	:	
Correspondence Receipt Date: 17 April 2002	:	COMMUNICATION
Attorney Docket No.: N/A	:	
For: Refractometer (Milanich's Tester)	:	

This is in response to the papers filed on 09 April 2004 and 17 April 2002.

DISCUSSION

The inventor states that

21 Jan 2001 my ownership in Moscow, address Nagornaya Street 6 (building 500 m2) was fired. In April 2001 it was a deadline for pending my patent, but I have no interest, no ability to do it. I spend a lot time for reconstruction my building, because it was only walls after a fire. I apply a copy (sorry, Russian and my translation) about that.
That was not the best time, but now I try to have U.S. patent. I try do it myself (*pro se*), because Russian patent agents have not experience to do this job (they re-send it to American agent).
I'll be glad to know that it is possible to consider this as revival unavoidable. I include some penalty in fee myself (as I understand from instructions).

It is not clear from the information currently of record whether these comments are made with respect to a particular patent application, since none of the component parts of a patent application (e.g., specification, claims, drawings or abstract) are present in the application file, and since the inventor has not specifically made reference to an existing patent application (e.g., by application number). Furthermore, the inventor has not specifically explained his reasons for stating that a "deadline for pending my patent" occurred in April 2001. The inventor is advised that U.S. law provides for revival of abandoned patent applications under certain circumstances, but it is not known whether any of these circumstances pertain to this particular situation. As such, it would be inappropriate to take any specific action at this time.

RECOMMENDATION

Applicant may wish to consider filing a petition to the Commissioner under 37 CFR 1.137(a) or (b) requesting that the application be revived.

A petition under 37 CFR 1.137(a) requesting that the application be revived on the grounds of unavoidable delay must be filed promptly after applicant becomes aware of the abandonment and such petition must be accompanied (1) by an adequate showing that the entire delay in filing the required reply from the due date for the reply until the filing of a grantable petition was unavoidable, (2) by a proper reply, and (3) by the petition fee required by law (37 CFR 1.17(l)). The small entity petition fee required by law is $250.00.

A petition under 37 CFR 1.137(b) requesting that the application be revived on the grounds of unintentional delay must be filed promptly after applicant becomes aware of the abandonment and such petition must be accompanied by (1) a statement that the "entire delay in filing the required reply from the due date for the reply until the filing of a grantable petition was unintentional," (2) a proper reply unless it has been previously submitted, and (3) the fee required by law for revival of an unintentionally abandoned application (1.17(m)). In this instance, the small entity fee required by law for revival of an unintentionally abandoned application is $750.

The filing of a petition under the unintentional standard cannot be intentionally delayed and therefore should be filed promptly. A person seeking revival due to unintentional delay cannot make a statement that the delay was unintentional unless the entire delay, including the delay from the date it was discovered that the application was abandoned until the filing of a grantable petition to revive under 37 CFR 1.137(b), was unintentional. A statement that the entire delay was unintentional is not appropriate if petitioner intentionally delayed the filing of a petition for revival under 37 CFR 1.137(b).

If the international filing date of the international application is before June 8, 1995, any petition to revive either under 37 CFR 1.137(a) or (b) must be accompanied by a terminal disclaimer and small entity fee of $55.

Applicant may wish to amend the first sentence of the specification to indicate that this application is a continuation or continuation-in-part of international application PCT/RU99/00356, filed on 28 September 1999, which designated the United States. The time period to make such an amendment expired as of 17 August 2002. Therefore, in order to make such an amendment, applicant must petition under 37 CFR 1.78(a)(3), which requires: (1) The reference required by 35 U.S.C. 120 and paragraph (a)(2) of this section to the prior-filed application, unless previously submitted; (2) The surcharge set forth in §§ 1.17(t) (currently $1370.00); and (3) A statement that the entire delay between the date the claim was due under paragraph (a)(2)(ii) of this section and the date the claim was filed was unintentional. The Commissioner may require additional information where there is a question whether the delay was unintentional.

CONCLUSION

The request is **DISMISSED**, without prejudice.

Please direct any further correspondence with respect to this matter to Mail Stop PCT, Commissioner for Patents, Office of PCT Legal Administration, P.O. Box 1450, Alexandria, VA 22313-1450.

Leonard Smith
PCT Legal Examiner
PCT Legal Office

George Dombroske
PCT Legal Examiner
PCT Legal Office
Tel: (571) 272-3282
Fax: (571) 273-0459

PTO/SB/64/PCT (12-04)
Approved for use through 03/31/2007. OMB 0651-0021
U.S. Patent and Trademark Office; U.S. DEPARTMENT OF COMMERCE
Under the Paperwork Reduction Act of 1995, no persons are required to respond to a collection of information unless it displays a valid OMB control number.

PETITION FOR REVIVAL OF AN INTERNATIONAL APPLICATION FOR PATENT DESIGNATING THE U.S. ABANDONED UNINTENTIONALLY UNDER 37 CFR 1.137(b)	Docket Number (Optional)

First Named Inventor:

International (PCT) Application No.: U.S. Application No.: (if known)

Filed:

Title:

Attention: PCT Legal Staff
Mail Stop PCT
Commissioner for Patents
P.O. Box 1450
Alexandria, VA 22313-1450

The above-identified application became abandoned as to the United States because the fees and documents required by 35 U.S.C. 371(c) were not filed prior to the expiration of the time set in 37 CFR 1.495(b) or (c) as applicable. The date of abandonment is the day after the date on which the 35 U.S.C. 371(c) requirements were due. See 37 CFR 1.495(h).

APPLICANT HEREBY PETITIONS FOR REVIVAL OF THIS APPLICATION

NOTE: A grantable petition requires the following items:
(1) Petition fee
(2) Proper reply
(3) Terminal disclaimer with disclaimer fee which is required for all international applications having an international filing date before June 8, 1995; and
(4) Statement that the entire delay was unintentional.

1. Petition fee

☐ Small entity - fee $_____(37 CFR 1.17(m)). Applicant claims small entity status. See 37 CFR 1.27.

☐ Other than small entity - fee $_____(37 CFR 1.17(m))

2. Proper reply

A. The proper reply (the missing 35 U.S.C. 371(c) requirement(s)) in the form of _____ (identify type of reply):

☐ has been filed previously on _____.

☐ is enclosed herewith.

This collection of information is required by 37 CFR 1.137(b). The information is required to obtain or retain a benefit by the public which is to file (and by the USPTO to process) an application. Confidentiality is governed by 35 U.S.C. 122 and 37 CFR 1.11 and 1.14. This collection is estimated to take 1.0 hour to complete, including gathering, preparing, and submitting the completed application form to the USPTO. Time will vary depending upon the individual case. Any comments on the amount of time you require to complete this form and/or suggestions for reducing this burden, should be sent to the Chief Information Officer, U.S. Patent and Trademark Office, U.S. Department of Commerce, P.O. Box 1450, Alexandria, VA 22313-1450. DO NOT SEND FEES OR COMPLETED FORMS TO THIS ADDRESS. **SEND TO: Mail Stop PCT, Commissioner for Patents, P.O. Box 1450, Alexandria, VA 22313-1450.**

If you need assistance in completing the form, call 1-800-PTO-9199 and select option 2.

Under the Paperwork Reduction Act of 1995, no persons are required to respond to a collection of information unless it displays a valid OMB control number.

3. Terminal disclaimer with disclaimer fee

☐ Since this international application has an international filing date on or after June 8, 1995, no terminal disclaimer is required.

☐ A terminal disclaimer (and disclaimer fee (37 CFR 1.20(d)) of $ _____ for a small entity or $_____ for other than a small entity) disclaiming the required period of time is enclosed herewith (see PTO/SB/63).

4. Statement. The entire delay in filing the required reply from the due date for the required reply until the filing of a grantable petition under 37 CFR 1.137(b) was unintentional.

WARNING: Information on this form may become public. Credit card information should not be included on this form. Provide credit card information and authorization on PTO-2038.

Signature	Date
Typed or Printed Name	Registration Number, if applicable
Address	Telephone Number
Address	

Enclosures: ☐ Response
☐ Fee Payment
☐ Terminal Disclaimer
☐ Other (please identify):

Privacy Act Statement

The **Privacy Act of 1974 (P.L. 93-579)** requires that you be given certain information in connection with your submission of the attached form related to a patent application or patent. Accordingly, pursuant to the requirements of the Act, please be advised that: (1) the general authority for the collection of this information is 35 U.S.C. 2(b)(2); (2) furnishing of the information solicited is voluntary; and (3) the principal purpose for which the information is used by the U.S. Patent and Trademark Office is to process and/or examine your submission related to a patent application or patent. If you do not furnish the requested information, the U.S. Patent and Trademark Office may not be able to process and/or examine your submission, which may result in termination of proceedings or abandonment of the application or expiration of the patent.

The information provided by you in this form will be subject to the following routine uses:

1. The information on this form will be treated confidentially to the extent allowed under the Freedom of Information Act (5 U.S.C. 552) and the Privacy Act (5 U.S.C 552a). Records from this system of records may be disclosed to the Department of Justice to determine whether disclosure of these records is required by the Freedom of Information Act.
2. A record from this system of records may be disclosed, as a routine use, in the course of presenting evidence to a court, magistrate, or administrative tribunal, including disclosures to opposing counsel in the course of settlement negotiations.
3. A record in this system of records may be disclosed, as a routine use, to a Member of Congress submitting a request involving an individual, to whom the record pertains, when the individual has requested assistance from the Member with respect to the subject matter of the record.
4. A record in this system of records may be disclosed, as a routine use, to a contractor of the Agency having need for the information in order to perform a contract. Recipients of information shall be required to comply with the requirements of the Privacy Act of 1974, as amended, pursuant to 5 U.S.C. 552a(m).
5. A record related to an International Application filed under the Patent Cooperation Treaty in this system of records may be disclosed, as a routine use, to the International Bureau of the World Intellectual Property Organization, pursuant to the Patent Cooperation Treaty.
6. A record in this system of records may be disclosed, as a routine use, to another federal agency for purposes of National Security review (35 U.S.C. 181) and for review pursuant to the Atomic Energy Act (42 U.S.C. 218(c)).
7. A record from this system of records may be disclosed, as a routine use, to the Administrator, General Services, or his/her designee, during an inspection of records conducted by GSA as part of that agency's responsibility to recommend improvements in records management practices and programs, under authority of 44 U.S.C. 2904 and 2906. Such disclosure shall be made in accordance with the GSA regulations governing inspection of records for this purpose, and any other relevant (*i.e.*, GSA or Commerce) directive. Such disclosure shall not be used to make determinations about individuals.
8. A record from this system of records may be disclosed, as a routine use, to the public after either publication of the application pursuant to 35 U.S.C. 122(b) or issuance of a patent pursuant to 35 U.S.C. 151. Further, a record may be disclosed, subject to the limitations of 37 CFR 1.14, as a routine use, to the public if the record was filed in an application which became abandoned or in which the proceedings were terminated and which application is referenced by either a published application, an application open to public inspection or an issued patent.
9. A record from this system of records may be disclosed, as a routine use, to a Federal, State, or local law enforcement agency, if the USPTO becomes aware of a violation or potential violation of law or regulation.

28 JUL 2005

UNITED STATES PATENT AND TRADEMARK OFFICE

COMMISSIONER FOR PATENTS
UNITED STATES PATENT AND TRADEMARK OFFICE
P.O. BOX 1450
ALEXANDRIA, VA 22313-1450
www.uspto.gov

Alexander Milanich
Studenetskij per. 6-51
Moscow 123100
Russia

In re Application of	:
MILANICH	: REQUEST FOR
Application No.: 10/123,286	:
Filing Date: April 17, 2002	: REFUND
Attorney's Docket No.: None	:
For: REFRACTOMETER (MILANICH'S TESTER)	: UNDER 37 CFR 1.26

This communication is in response to applicant's communication filed 27 June 2005, seeking a refund of publication fee of $940.00 paid on 14 April 2005. The paper has been treated as a petition for a refund under 37 CFR 1.26. The petition is **GRANTED.**

A final rejection was mailed on 05 April 2005. No issue fee or publication fee was required at that time. Accordingly, the $300 publication fee and $640 issue fee will be refunded in due course.

Any further question with reqards to this matter should be addressed to Mail Stop PCT, Commissioner for Patents, Office of PCT Legal Administration, P.O. Box 1450, Alexandria, VA 22313-1450, with the contents of the letter marked to the attention of the Office of PCT Legal Administration.

Leonard E. Smith
PCT Legal Examiner
PCT Legal Affairs
Office of Patent Cooperation Treaty
Legal Administration

Telephone: (571) 272-3297
Facsimile: (571) 273-0459

UNITED STATES PATENT AND TRADEMARK OFFICE

Commissioner for Patents
United States Patent and Trademark Office
P.O. Box 1450
Alexandria, VA 22313-1450
www.uspto.gov

TOWNSEND AND TOWNSEND AND CREW, LLP
TWO EMBARCADERO CENTER
EIGHTH FLOOR
SAN FRANCISCO CA 94111-3834

COPY MAILED

MAR 2 3 2007

OFFICE OF PETITIONS

In re Application of	:	
Jonathan B. Houze, et al.	:	
Application No. 10/123,298	:	DECISION ON PETITION
Filed: Aril 15, 2002	:	
Attorney Docket No. 018781-002130US	:	

This is a decision on the petition under the unintentional provisions of 37 CFR 1.137(b), filed November 20, 2006, to revive the above-identified application.

The petition is **GRANTED**.

The application became abandoned for failure to reply in a timely manner to the non-final Office action mailed, August 29, 2005, which set a shortened statutory period for reply of three (3) months. No extensions of time under the provisions of 37 CFR 1.136(a) were obtained. Accordingly, the application became abandoned on November 30, 2005.

The petition satisfies the requirements of 37 CFR 1.137(b) in that petitioner has supplied (1) the reply in the form of an amendment, (2) the petition fee of $750; and (3) a proper statement of unintentional delay.

An extension of time under 37 CFR 1.136 must be filed prior to the expiration of the maximum extendable period for reply. See In re Application of S., 8 USPQ2d 1630, 1631 (Comm'r Pats. 1988). Accordingly, since the $510 extension of time submitted with the petition on November 20, 2006 was subsequent to the maximum extendable period for reply, this fee is unnecessary and will be credited to petitioner's deposit account.

It is not apparent whether the person signing the statement of unintentional delay was in a position to have firsthand or direct knowledge of the facts and circumstances of the delay at issue. Nevertheless, such statement is being treated as having been made as the result of a reasonable inquiry into the facts and circumstances of such delay. See 37 CFR 10.18(b) and Changes to Patent Practice and Procedure; Final Rule Notice, 62 Fed. Reg. 53131, 53178 (October 10, 1997), 1203 Off. Gaz. Pat. Office 63, 103 (October 21, 1997). In the event that such an inquiry has not been made, petitioner must make such an inquiry. If such inquiry results in the discovery that it is not correct that the entire delay in filing the required reply from the due

date for the reply until the filing of a grantable petition pursuant to 37 CFR 1.137(b) was unintentional, petitioner must notify the Office.

There is no indication that the person signing the petition was ever given a power of attorney to prosecute the application. If the person signing the petition desires to receive future correspondence regarding this application, the appropriate power of attorney document must be submitted. While a courtesy copy of this decision is being mailed to the person signing the petition, all future correspondence will be directed to the address currently of record until appropriate instructions are received.

Telephone inquiries concerning this decision should be directed to April Wise at (571) 272-1642.

This application is being referred to Technology Center AU 1625 for appropriate action by the Examiner in the normal course of business on the reply received November 20, 2006.

Irvin Dingle
Petitions Examiners
Office of Petitions

cc: DAVID C. PAULING
JONES DAY
222 EAST 41ST STREET
NEW YORK, NY 10017

UNITED STATES PATENT AND TRADEMARK OFFICE

COMMISSIONER FOR PATENTS
UNITED STATES PATENT AND TRADEMARK OFFICE
P.O. BOX 1450
ALEXANDRIA, VA 22313-1450
www.uspto.gov

YOUNG & THOMPSON
745 SOUTH 23RD STREET 2ND FLOOR
ARLINGTON VA 22202

COPY MAILED
MAR 1 0 2004
OFFICE OF PETITIONS

Applicant: Sternad et al.
Appl. No.: 10/123,318
Filing Date: April 17, 2002
Title: DIGITAL AUDIO PRECOMPENSATION
Attorney Docket No.: 1503-1006
Pub. No.: US 2003/01897965 A1
Pub. Date: October 23, 2003

This is a decision on the request for corrected patent application publication under 37 CFR 1.221(b), filed on December 18, 2003 for the above-identified application.

The request is granted.

The corrected patent application publication will be published in due course.

Inquires concerning this communication should be directed to Mark Polutta at (703) 308-8122 (voice) or (703) 746-3465 (facsimile).

Mark O. Polutta
Office of Patent Legal Administration
Office of the Deputy Commissioner
for Patent Examination Policy

UNITED STATES PATENT AND TRADEMARK OFFICE

COMMISSIONER FOR PATENTS
UNITED STATES PATENT AND TRADEMARK OFFICE
P.O. BOX 1450
ALEXANDRIA, VA 22313-1450
www.uspto.gov

COPY MAILED

JAN 11 2007

OFFICE OF PETITIONS

PHILIPS INTELLECTUAL PROPERTY & STANDARDS
P.O. BOX 3001
BRIARCLIFF MANOR, NY 10510

In re Application of Tomas Brodsky Application No. 10/123,330 Filed: April 16, 2002 Attorney Docket No. US010205	: : : : :	ON PETITION

This is a decision on the petition under 37 CFR 1.137(b) to revive the above-identified application, filed June 20, 2006.

The petition is **GRANTED**.

The application became abandoned for failure to pay the issue fee on or before May 30, 2006. A Notice of Abandonment was mailed on July 5, 2006. However, on June 20, 2006, the present petition was filed.

The petition satisfies the requirements of 37 CFR 1.137(b) in that petitioner has supplied (1) the reply in the form of the requisite issue/publication fee; (2) the petition fee of $1,500; and (3) an adequate statement of unintentional delay.

The application is being referred to the Office of Publications to be processed into a patent.

Telephone inquires related to this decision should be directed to the undersigned at (571) 272-3204. Telephone inquiries related to processing at Publishing Division should be directed to (571) 272-4200.

Sherry D. Brinkley
Petitions Examiner
Office of Petitions

UNITED STATES PATENT AND TRADEMARK OFFICE

Commissioner for Patents
United States Patent and Trademark Office
P.O. Box 1450
Alexandria, VA 22313-1450
www.uspto.gov

PETER J GORDON PATENT COUNSEL
AVID TECHNOLOGY INC
ONE PARK WEST
TEWKSBURY MA 01876

COPY MAILED

OCT 3 1 2008

OFFICE OF PETITIONS

In re Application of	:	
Franke, et al.	:	
Application No. 10/123,332	:	DECISION ON PETITION
Filed: April 15, 2002	:	
Attorney Docket No. A2002010	:	

This is a decision on the petition to withdraw the holding of abandonment under 37 CFR 1.181, filed October 17, 2008.

The petition is **GRANTED.**

The above-identified application was held abandoned for failure to timely file a response to the non-final Office action mailed January 22, 2008. This Office action set a shortened statutory period for reply of three (3) months. Therefore, the last day a reply could have been timely filed, with a three month extension of time, would have been July 22, 2008. The Office mailed a Notice of Abandonment on August 20, 2008.

A review of the application file reveals the presence of an Amendment, filed on July 22, 2008, made timely by obtaining a three month extension of time. A review of Office finance records confirms that the Office received and processed the fee for the three month extension of time on July 22, 2008. Accordingly, it is obvious that the Notice of Abandonment was mailed in error.

In view thereof, **the holding of abandonment is withdrawn.**

The matter is being forwarded to Group Art Unit 2153 for consideration of the Amendment, timely filed with a three month extension of time on July 22, 2008.

Telephone inquiries regarding this decision should be directed to the undersigned at (571)272-3207.

Cliff Congo
Petitions Attorney
Office of Petitions

UNITED STATES PATENT AND TRADEMARK OFFICE

COMMISSIONER FOR PATENT
UNITED STATES PATENT AND TRADEMARK OFFIC
WASHINGTON, D.C. 20231
www.uspto.go

Paper No. 7

JOHN C. POKOTYLO
STRAUB & POKOTYLO
1 BETHANY ROAD
SUITE 83, BUILDING 6
HAZLET, NJ 07730

COPY MAILED

OCT 2 4 2002

OFFICE OF PETITIONS

NOTICE

In re Application of :
Yakov Rekhter :
Application No. 10/123,353 :
Filed: April 16, 2002 :
Attorney Docket No. Juniper-14 (JNP-0156) :

This is a notice regarding your request for acceptance of a fee deficiency submission under 37 CFR 1.28. On September 1, 1998, the Court of Appeals for the Federal Circuit held that 37 CFR 1.28(c) is the sole provision governing the time for correction of the erroneous payment of the issue fee as a small entity. **See DH Technology v. Synergystex International, Inc. 154 F.3d 1333, 47 USPQ2d 1865 (Fed. Cir. Sept. 1, 1998).**

The Office no longer investigates or rejects original or reissue applications under 37 CFR 1.56. **1098 Off. Gaz. Pat. Office 502 (January 3, 1989)**. Therefore, nothing in this Notice is intended to imply that an investigation was done.

Your fee deficiency submission under 37 CFR 1.28 is hereby **ACCEPTED**.

Inquiries related to this communication should be directed to the Office of Petitions Staff at (703) 305-9285.

This file is being forwarded to Technology Center 2800.

Irvin Dingle
Petitions Examiner
Office of Petitions
Office of the Deputy Commissioner
for Patent Examination Policy

UNITED STATES PATENT AND TRADEMARK OFFICE

COMMISSIONER FOR PATENTS
UNITED STATES PATENT AND TRADEMARK OFFICE
P.O. BOX 1450
ALEXANDRIA, VA 22313-1450
www.uspto.gov

MORGAN LEWIS & BOCKIUS LLP/RAMBUS INC.
2 PALO ALTO SQUARE
3000 EL CAMINO REAL
PALO ALTO, CA 94306

COPY MAILED
FEB 16 2005
OFFICE OF PETITIONS

In re Application of :
Jared L. Zerbe :
Application No. 10/123,370 :
Filed: April 15, 2002 :
Attorney Docket No. 9797-0096-999 :

ON PETITION

This is a decision on the petition, filed February 4, 2005, under 37 CFR 1.313(c)(2) to withdraw the above-identified application from issue after payment of the issue fee.

The petition is **GRANTED**.

The above-identified application is withdrawn from issue for consideration of a submission under 37 CFR 1.114 (request for continued examination). See 37 CFR 1.313(c)(2).

Petitioner is advised that the issue fee paid on September 23, 2004, in the above-identified application cannot be refunded. If, however, the above-identified application is again allowed, petitioner may request that it be applied towards the issue fee required by the new Notice of Allowance. [1]

Telephone inquiries relating to this decision should be directed to the undersigned at (571) 272-3204.

The application is being referred to Technology Center AU 2816 for further processing of the request for continued examination under 37 CFR 1.114.

Sherry D. Brinkley
Petitions Examiner
Office of Petitions
Office of the Deputy Commissioner
for Patent Examination Policy

[1]The request to apply the issue fee to the new Notice may be satisfied by completing and returning the new Issue Fee Transmittal Form PTOL-85(b), which includes the following language thereon: "Commissioner for Patents is requested to apply the Issue Fee and Publication Fee (if any) or re-apply any previously paid issue fee to the application identified above." Petitioner is advised that, whether a fee is indicated as being due or not, the Issue Fee Transmittal Form must be completed and timely submitted to avoid abandonment. Note the language in bold text on the first page of the Notice of Allowance and Fee(s) Due (PTOL-85).

UNITED STATES PATENT AND TRADEMARK OFFICE

Commissioner for Patents
United States Patent and Trademark Office
P.O. Box 1450
Alexandria, VA 22313-1450
www.uspto.gov

Paper No. 12

Baker & Botts
30 Rockefeller Plaza
New York, NY 10112

COPY MAILED

SEP 1 6 2003

OFFICE OF PETITIONS

In re Application of :
Frenette et al. :
Application No. 10/123,373 :
Filed: April 15, 2002 :
Attorney Docket No. AP34206 :

DECISION ON PETITION

This is a decision on the petition under 37 CFR 1.10, filed May 22, 2003, requesting that the above-identified application be accorded a filing date of April 15, 2002, rather than the presently accorded filing date of April 16, 2002.

Petitioner alleges that the application was deposited in Express Mail service on April 15, 2002. In support of the allegation, the petition is accompanied by a copy of Express Mail label No. EU206442727US. The "date-in" indicated on the Express Mail label is illegible. However, the Express Mail label contains a United States Postal Service (USPS) stamp of April 15, 2002. The same Express Mail label number was placed on the original application papers located in the official file.

In view of the above, the petition is **granted**. No petition fee is necessary.

This application file will be forwarded to the Office of Initial Patent Examination for correction of the filing date to April 15, 2002, and the mailing of a corrected filing receipt.

Telephone inquiries should be directed to the undersigned at (703) 306-5589.

Christina Tartera Donnell

Christina Tartera Donnell
Senior Petitions Attorney
Office of Petitions

#4
DW

UNITED STATES PATENT AND TRADEMARK OFFICE

UNDER SECRETARY OF COMMERCE FOR INTELLECTUAL PROPERTY AND
DIRECTOR OF THE UNITED STATES PATENT AND TRADEMARK OFFICE
WASHINGTON, DC 20231
www.uspto.gov

SEP 11 2003

Patent Docket Clerk
RYNDAK & SURI
Suite 2630
30 North LaSalle Street
Chicago IL 60602

MAILED

SEP 11 2003

OFFICE OF THE DIRECTOR
TC 3600

In re application of
Terrence J. Teichman
Application No.10/123,375
Filed: April 16, 2002
For: FLEXIBLE PLATEN IMAGE DISPLAY DEVICE AND METHOD

DECISION ON REQUEST FOR WITHDRAWAL OF ATTORNEY

This is a decision on the request filed on July 22, 2003, under 37 CFR 1.36 and MPEP 402.06, requesting permission to withdraw as the attorney of record in the above-identified application. There is no fee for this request.

The request is **NOT APPROVED**.

Under 37 CFR 1.36 an attorney may withdraw only upon application to and approval by the Commissioner. It should be noted that a withdrawal is effective when approved, not when filed. Besides giving due notice to his or her client and delivering to the client all papers and property to which the client is entitled as specified under 37 CFR 10.40, approval of such a request requires that the following conditions be met:

A) Each attorney of record must sign the notice of withdrawal, or <u>the notice must contain a clear indication of one attorney signing on behalf of another, because the Office does not recognize law firms;</u>

B) A proper reason for the withdrawal as enumerated in 37 CFR 10.40(b) or subsection (1)-(6) of 37 CFR 10.40(c) must be provided; and

C) If withdrawal is requested in accordance with 37 CFR 10.40(c) above, there must be at least 30 days between approval of the withdrawal and the later of the expiration date of a time period for reply or the expiration date of the period which can be obtained by a petition and fee for extension of time under 37 CFR 1.136(a).

The request to withdraw as attorney is not accepted in the above-identified application because the request lacks condition A) above.

All the attorneys given power in the original Declaration/Power of Attorney are not listed as being withdrawn in the Request for Withdrawal of Attorney. The Patent Office does not recognize law firms as entities since their complement changes over time. It is suggested that "all the of the attorneys of the law firm of Ryndak & Suri" be changed to "all the attorneys of record".

Steven N. Meyers
Special Programs Examiner
Patent Technology Center 3600
(703) 308-3868

SNM/ekn 9/10/03

UNITED STATES PATENT AND TRADEMARK OFFICE

Commissioner for Patents
United States Patent and Trademark Office
P.O. Box 1450
Alexandria, VA 22313-1450
www.uspto.gov

Paper No.6

GOWLING LAFLEUR HENDERSON
SUITE 2600
160 ELGIN STREET
OTTAWA ON KIP 1C3 CA CANADA

COPY MAILED

JUL 0 9 2004

OFFICE OF PETITIONS

In re Application of :
Ian Grier et al :
Application No. 10/123,419 : DECISION ON PETITION
Filed: April 17, 2002 : UNDER 37 CFR 1.78(a)(6)
Attorney Docket No. 08891025US1 :

This is a decision on the petition under 37 CFR 1.78(a)(6), filed November 10, 2003, to accept an unintentionally delayed claim under 35 U.S.C. §119(e) for the benefit of prior-filed provisional Application No. 60/284,196, filed April 18, 2001.

The petition is **Granted.**

A petition under 37 CFR 1.78(a)(6) is only applicable to those applications filed on or after November 29, 2000. Further, the petition is appropriate only after expiration of the period specified in 37 CFR 1.78(a)(5)(ii) and must be filed during the pendency of the nonprovisional application. In addition, the petition must be accompanied by:

(1) the surcharge set forth in 37 CFR 1.17(t);

(2) a statement that the entire delay between the date the claim was due under 37 CFR 1.78(a)(5)(ii) and the date the claim was filed was unintentional; and

(3) the reference to the prior-filed provisional application supplied in an application data sheet (ADS)(37 CFR 1.76) or as an amendment in the first sentence of the specification following the title. *See* 35 U.S.C. 119(e) and 37 CFR 1.78(a)(5)(iii). The Commissioner may require additional information where there is a question whether the delay was unintentional.

The instant pending nonprovisional application was filed on April 17, 2002, within twelve months of the filing date of the prior-filed provisional application, Application No. 60/284,196, which was filed on April 18, 2001, for which priority is claimed. A reference to the prior-filed provisional application has been included in an amendment to include the amended page one(1) of the specification submitted with the instant petition.

The instant nonprovisional application was filed after November 29, 2000, and the claim for priority herein is submitted after expiration of the period specified in 37 CFR 1.78(a)(5)(ii). Also, the reference to the prior-filed provisional application was submitted during the pendency of the nonprovisional application for which the benefit is sought. *See* 35 U.S.C. §119(e). Accordingly, having found that the instant petition satisfies the conditions of 37 CFR 1.78(a)(6) for acceptance of an unintentionally delayed claim for priority under 35 U.S.C. §119(e), the petition to accept an unintentionally delayed claim of benefit to prior-filed provisional Application No. 60/284,196 is granted.

The granting of the petition to accept the delayed benefit claim to the prior-filed application under 37 CFR 1.78(a)(6) should not be construed as meaning that the instant application is entitled to the benefit of the filing date of the prior-filed application. In order for the instant application to be entitled to the benefit of the prior-filed application, all other requirements under 35 U.S.C. §119(e) and 37 CFR 1.78(a)(4) and (a)(5) must be met. Similarly, the fact that the corrected Filing Receipt accompanying this decision on petition includes the prior-filed application should not be construed as meaning that applicant is entitled to the claim for benefit of priority to the prior-filed application noted thereon. Accordingly, the examiner will, in due course, consider this benefit claim and determine whether the instant application is entitled to the benefit of the earlier filing date.

A corrected Filing Receipt, which includes the priority claim to the prior-filed provisional application, accompanies this decision on petition.

Any inquiries concerning this decision may be directed to Karen Creasy at (703) 305-8859.

The application is being forwarded to Technology Center AU 2631 for consideration by the examiner of the claim under 35 U.S.C. §119(e) for the benefit of priority to prior-filed provisional Application No. 60/284,196, filed April 18, 2001.

Karen Creasy

Karen Creasy
Petitions Examiner
Office of Petitions
Office of the Deputy Commissioner
for Patent Examination Policy

ATTACHMENT: Corrected Filing Receipt

UNITED STATES PATENT AND TRADEMARK OFFICE

COMMISSIONER FOR PATENTS
UNITED STATES PATENT AND TRADEMARK OFFICE
P.O. BOX 1450
ALEXANDRIA, VA 22313-1450
www.uspto.gov

VOLENTINE FRANCOS, & WHITT PLLC
ONE FREEDOM SQUARE
11951 FREEDOM DRIVE SUITE 1260
RESTON, VA 20190

COPY MAILED

NOV 2 6 2004

OFFICE OF PETITIONS

In re Application of
Sangiun Choi, et al.
Application No. 10/123,431
Filed: April 17, 2002
Attorney Docket No. SEC.892

ON PETITION

This is a decision on the petition under 37 CFR 1.137(b) to revive the above-identified application, filed September 16, 2004.

The application became abandoned for failure to pay the issue fee on or before September 2, 2004. Receipt is acknowledged of the requisite issue fee on September 16, 2004.

The petition is **GRANTED**.

The application is being forwarded to Publishing Division.

Telephone inquires related to this decision should be directed to the undersigned at (571) 272-3204. Telephone inquiries related to processing at Publishing Division should be directed to (703) 305-8283.

Sherry D. Brinkley
Petitions Examiner
Office of Petitions
Office of the Deputy Commissioner
for Patent Examination Policy

UNITED STATES PATENT AND TRADEMARK OFFICE

Commissioner for Patents
United States Patent and Trademark Office
P.O. Box 1450
Alexandria, VA 22313-1450
www.uspto.gov

MAILED

JAN 1 1 2004

EDMUND P. ANDERSON
DELPHI TECHNOLOGIES, INC.
Legal Staff, Mail Code: 480-414-420
P.O. Box 5052
Troy, MI 48007-50502

In re Application of:
Richardson et al.
Serial No.: 10/123,437
Filed: April 16, 2002
Attorney Docket No.: **DP-304335**

DECISION *SUA SPONTE*
WITHDRAW NOTICE
OF ALLOWABILITY

This is a decision, *sua sponte*, withdrawing the Notice of Allowance of the above-identified application.

Applicant is advised that the Notice of Allowance mailed November 29, 2004 is vacated. If the issue fee has already been paid, applicant may request a refund or request that the fee be credited to a deposit account. However, applicant may wait until the application is either found allowable or held abandoned. If allowed, upon receipt of a new Notice of Allowance, applicant may request that the previously submitted issue fee be applied. If abandoned, applicant may request refund or credit to a specified Deposit Account.

The Notice of Allowability mailed November 29, 2004 was in error. The incorrect serial number was credited with the Notice of Allowability. The present application is currently under final rejection and the shortened statutory period continues to run from the mail date of July 28, 2004 of the Final Office Action.

Richard K. Seidel, Group Director
Technology Center 2800

UNITED STATES PATENT AND TRADEMARK OFFICE

Commissioner for Patents
United States Patent and Trademark Office
P.O. Box 1450
Alexandria, VA 22313-1450
www.uspto.gov

Foley Hoag, LLP
Patent Group
World Trade Center
155 Seaport Blvd
Boston, MA 02110

MAILED

AUG 2 6 2005

Technology Center 2100

In re Application of:	)	
Sherwin HAN	)	
Application No. 10/123,456	)	
Filed: August 25, 2003	)	**DECISION ON REQUEST FOR**
For: KNOWLEDGE ACQUISTION AND	)	**WITHDRAWAL AS ATTORNEY**
RETRIEVAL APPARATUS AND	)	
METHOD	)	

This is a decision on the Request To Withdraw from Representation filed June 2, 2005.

A grantable request to withdraw as attorney of record should indicate thereon the present mailing addresses of the attorney(s) who is/are withdrawing from the record and of the applicant. The request for withdrawal must be signed by every attorney seeking to withdraw or contain a clear indication that one attorney is signing on behalf of another/others. A request to withdraw will not be approved unless at least 30 (thirty) days would remain between the date of approval and the later of the expiration date of a time to file a response or the expiration date of the maximum time period which can be extended under 37 C.F.R. § 1.136(a). The effective date of withdrawal is the date of decision and not the date of request. See M.P.E.P. § 402.06. **37 C.F.R. § 10.40(a) further requires that the applicant or patent owner be notified of the withdrawal of the attorney or agent**.

There is no indication that Applicant has been notified of the request for withdrawal.

Accordingly, the request is **DENIED**.

All future communications from the United States Patent and Trademark Office (Office) will continue to be directed to the above-listed address until otherwise notified by applicant. Applicant is reminded of the obligation to promptly notify the Office of any change in correspondence address to ensure receipt of all communications from the Office.

Vincent N. Trans
Special Program Examiner
Technology Center 2100
Computer Architecture, Software, and
Information Security
571-272-3613

OIPE JC99
JAN 21 2003
PATENT & TRADEMARK OFFICE

3632 $
#2
DW

PA816-01 PATENT

IN THE UNITED STATES PATENT AND TRADEMARK OFFICE

Applicant	:	Andrew Dennis	Group 3632
Serial No.	:	10/123,476	
Filed	:	09/24/99	
Title	:	"C" SECTION STRUCTURAL CONNECTORS	
Examiner	:	Steven Marsh	

RECEIVED
JAN 27 2003
GROUP 3600

PETITION TO MAKE SPECIAL

Assistant Commissioner for Patents
Washington, D. C. 20231

Sir:

Impoverished people living in under developed countries frequently cannot afford suitable housing of any type. Those who can afford some housing, live in poorly constructed wooden structures made from panels that are bonded together to form either a wall, a floor or a roof. The bonded panels must be reinforced by studs in the panels' core. Additionally, support structures such as columns, beams, posts or rafters must be utilized.

The support structures are expensive. Moreover, the wood construction is fraught with problems such as warping, rot and insect infestation. Ideally, a low cost composite cement panel should be used to construct the wall, the floor and the roof of

01/23/2003 ZTUHAR1 00000046 10123476
01 FC:1460 130.00 OP

the low cost house because it does not warp or rot and is not subject to insect infestation.

The subject matter of the above-identified invention is a type of structural connector that can be used to connect together the cement composite panels of the walls, floor and roof of the house and obviate the need for the support structures. Like the composite panel, the structural connector does not warp or rot and is not subject to insect infestation.

This petition should be granted because the invention potentially serves a humanitarian purpose of providing decent housing in parts of the world where it is badly needed. Enclosed herewith is a check for $130 to cover the cost of filing the petition.

Respectfully submitted

Leonard Weiss
Attorney of Record

UNITED STATES PATENT AND TRADEMARK OFFICE

UNDER SECRETARY OF COMMERCE FOR INTELLECTUAL PROPERTY AND
DIRECTOR OF THE UNITED STATES PATENT AND TRADEMARK OFFICE
WASHINGTON, DC 20231
www.uspto.gov

MAILED

MAR 04 2003

DIRECTOR'S OFFICE
TECHNOLOGY CENTER 3600

Leonard Weiss
2300 W. Sahara Avenue, Box 34
Las Vegas, NV 89102

Paper No. 3

In re application of
Andrew Dennis
Application No. 10/123,476
Filed: April 17, 2002
For: "C" SECTION STRUCTURAL CONNECTORS

DECISION ON PETITION TO MAKE SPECIAL

This is a decision on the petition under 37 C.F.R §1.102(d) to make the above-identified application special that was filed on January 21, 2003.

The petition requests that the above-identified application be made special for the reason that the invention potentially serves a humanitarian purpose of providing decent housing in parts of the world where it is badly needed.

Currently, the grounds upon which the applicant endeavors to make his application special, humanitarian purpose, is not recognized as a valid reason for granting an application special status. The only acceptable reasons for requesting an application be awarded special status can be found in MPEP 708.02

For the above stated reasons, the petition is **DENIED**.

Any request for reconsideration must be filed within TWO MONTHS of the date of this decision. Extensions of time under 37 CFR 1.136(a) are permitted.

Applicant should promptly submit a renewed petition to the Commissioner of Patents and Trademarks, Washington, D.C. 20231. The envelope should indicate that the correspondence be brought to the attention of Technology Center 3600.

Until the renewed petition is submitted, the application will be returned to the examiner's docket to await treatment on the merits in the normal order of examination.

SUMMARY: Petition to Make Special **DENIED**.

Steven N. Meyers
Special Programs Examiner
Technology Center 3600
(703) 308-3868
(703) 605-0586

SNM/tpl: 2/27/03

#5
DW

UNITED STATES PATENT AND TRADEMARK OFFICE

UNDER SECRETARY OF COMMERCE FOR INTELLECTUAL PROPERTY AND
DIRECTOR OF THE UNITED STATES PATENT AND TRADEMARK OFFICE
WASHINGTON, DC 20231
www.uspto.gov

APR - 8 2003

MAILED

APR - 8 2003

OFFICE OF THE DIRECTOR
TC 3600

Leonard Weiss
2300 W. Sahara Avenue, Box 34
Las Vegas, NV 89102

Paper No. 5

In re application of Andrew Dennis Application No. 10/123,476 Filed: April 17, 2002 For: "C" SECTION STRUCTURAL CONNECTORS	: : : : :	**DECISION ON RENEWED PETITION TO MAKE SPECIAL**

This is a decision on the renewed petition under 37 C.F.R §1.102(d) to make the above-identified application special that was filed on March 24, 2003.

A petition was filed on January 21, 2003 requesting that the above-identified application be made special for the reason that the invention potentially serves a humanitarian purpose of providing decent housing in parts of the world where it is badly needed. The petition was denied in a decision mailed March 4, 2003 wherein it was held the grounds upon which the applicant endeavors to make his application special, humanitarian purpose, is not recognized as a valid reason for granting an application special status. The only acceptable reasons for requesting an application be awarded special status can be found in MPEP 708.02

In the renewed petition of March 24, 2003, the applicant asserts that paragraph (d) of 37 CFR 1.102 states that a "petition to make an application special on grounds other than those referred to in paragraph (c) must be accompanied by the fee." Furthermore, the applicant argues that since the petition fee was submitted in accordance with 37 CFR 1.102(d), the petition should be granted and that denial of the petition is arbitrary and capricious and not in accordance with 37 CFR 1.102.

Petitions to make special not requiring a fee are set forth in paragraph (c) of 37 CFR 1.102. All other petitions to make special on grounds other than those referred to in paragraph (c) must be accompanied by a fee. However, the grounds on which a petition to make special is based still must satisfy one of those set forth in MPEP 708.02, sections I-XII. Applicant's grounds of "humanitarian purposes" is not recognized as a valid reason since it does not fall within sections I-XII of MPEP 708.02.

For the above stated reasons, the petition is **DENIED**.

Any request for reconsideration must be filed within TWO MONTHS of the date of this decision. Extensions of time under 37 CFR 1.136(a) are permitted.

Applicant should promptly submit a renewed petition to the Commissioner of Patents, P.O. Box 1450, Alexandria, VA 22313-1450. The envelope should indicate that the correspondence be brought to the attention of Technology Center 3600.

Until the renewed petition is submitted, the application will be returned to the examiner's docket to await treatment on the merits in the normal order of examination.

SUMMARY: Petition to Make Special **DENIED**.

Randolph A. Reese
Special Programs Examiner
Technology Center 3600
(703) 308-2121
(703) 605-0586

RAR/tpl: 4/4/03

UNITED STATES PATENT AND TRADEMARK OFFICE

Commissioner for Patents
United States Patent and Trademark Office
P.O. Box 1450
Alexandria, VA 22313-1450
www.uspto.gov

Paper No. 10

LEONARD WEISS, ESQ.
2200 WEST SAHARA AVENUE, BOX 34
LAS VEGAS, NV 89102

COPY MAILED

JUN 0 9 2004

OFFICE OF PETITIONS
ON PETITION

In re Application of :
Dennis :
Application No. 10/123,476 :
Filed: April 17, 2002 :
Attorney Docket No. PA116-01 :

This decision concerns the May 20, 2004 "Petition to Revive." The petition asserts timely response to an Office action and is being properly treated as a petition under 37 CFR 1.181 to withdraw the holding of abandonment in the above-referenced application.[1]

The petition is **GRANTED.**

The application became abandoned as of January 9, 2004 for failure to timely submit a proper reply to the October 8, 2003 non-final Office Action.

The instant petition asserts timely response to this Office action. In support, the petition is accompanied by a copy of Applicant's postcard receipt, indicating receipt in the USPTO on January 2, 2004 of an amendment for Application No. 10/123,776, which should have been 10/123,476. Likewise, the incorrect application number was included in the amendment transmittal.

Petitioner argues, and the Office agrees, that despite the typographical errors in the application number, the amendment transmittal provides sufficient information (Applicant name; filing date; invention title) for the amendment to be matched with the proper file. In addition, the postcard specifies that the amendment is filed in response to an October 8, 2003 Office action, and includes counsel's name.

In view of the above, the amendment may be considered timely filed. The petition is thus granted. No petition fee is owed. The $55 petition fee enclosed with the petition and intended for a §1.137(a) petition has been refunded.

The file is being returned to Technology Center 3600 for continued examination.

Telephone inquiries should be directed to the undersigned at (703) 308-0763.

RC Tang
Petitions Attorney
Office of Petitions

---

[1] Although a Notice of Abandonment has not yet been mailed, the application would have become abandoned by statute as of 1/9/04, but for the 1/2/04 amendment. See discussion below.

UNITED STATES PATENT AND TRADEMARK OFFICE

COMMISSIONER FOR PATENTS
UNITED STATES PATENT AND TRADEMARK OFFICE
P.O. BOX 1450
ALEXANDRIA, VA 22313-1450
www.uspto.gov

HUMAN GENOME SCIENCES INC
INTELLECTUAL PROPERTY DEPT.
14200 SHADY GROVE ROAD
ROCKVILLE MD 20850

COPY MAILED
MAY 12 2004
OFFICE OF PETITIONS

Applicant: Greene et al.
Appl. No.: 10/123,481
Filing Date: April 17, 2002
Title: FIBROBLAST GROWTH FACTOR-13
Attorney Docket No.: PF171P1D1
Pub. No.: US 2003/0186253 A1
Pub. Date: October 2, 2003

This is a decision on the request for corrected patent application publication under 37 CFR 1.221(b), filed on November 25, 2003, for the above-identified application.

The request is DISMISSED.

Applicant requests that the application be republished because the patent application publication contains an error on the front page of the publication wherein PCT/US95/07108 is misprinted as PCT/US95/007108. Applicant argues that the mistake is material because the missing priority data affects the use of the published application as prior art under 35 U.S.C. § 102(e), as a member of the public would be unable to determine the correct effective date of the publication as a reference.

37 CFR 1.221(b) is applicable "only when the Office makes a material mistake which is apparent from Office records." A material mistake must affect the public's ability to appreciate the technical disclosure of the patent application publication, to determine the scope of the patent application publication, or to determine the scope of the provisional rights that an applicant may seek to enforce upon issuance of a patent.[1] The instant request does not identify a material mistake in the publication made by the Office:

The error in the benefit claim is an Office mistake, but it is not a material mistake as required by 37 CFR 1.221(b). The improper benefit claim is not a material mistake because it is an obvious typographical error as the number includes an extra digit and it does not affect the public's ability to appreciate the technical disclosure of the patent application publication, to determine the scope

[1] Changes to Implement Eighteen-Month Publication of Patent Applications, 65 FR 57023, 57038 (Sept. 20, 2000), 1239 Off. Gaz. Pat. Office Notices 63, 75 (Oct. 10, 2000) (final rule).

of the patent application publication or to determine the scope of the provisional rights that an applicant may seek to enforce upon issuance of a patent. The specification and claims were accurately published, thus one can read and understand the content of the application. The error also does not affect the use of the patent application publication as a prior art reference, because the earliest priority date is correctly published. While there is an error in the priority information anyone looking to determine the effective date of the publication as a reference would have to order the application files and would be reviewing PALM. Additionally, the parent application 08/976,315 issued as U.S. Patent No. 6,403,557 on June 11, 2002, therefore, the patent is usable as a reference.

Any questions or request for reconsideration of this decision, should be addressed as follows:

By mail to: Mail Stop PGPUB
Commissioner for Patents
P.O. Box 1450
Alexandria, VA 22313-1450

Inquiries relating to this matter may be directed to Mark Polutta at (703) 308-8122 (voice) or (703) 746-3465 (facsimile).

Mark Polutta
Legal Advisor
Office of Patent Legal Administration
Office of the Deputy Commissioner
for Patent Examination Policy

Enclosure: Corrected Filing Receipt

UNITED STATES PATENT AND TRADEMARK OFFICE

Commissioner for Patents
United States Patent and Trademark Office
P.O. Box 1450
Alexandria, VA 22313-1450
www.uspto.gov

MICHAEL S. GZYBOWSKI
BUTZEL LONG
350 SOUTH MAIN STREET
SUITE 300
ANN ARBOR MI 48104

COPY MAILED

FEB 22 2005

OFFICE OF PETITIONS

In re Application of :
Eikhoff, et al. :
Application No. 10/123,499 :
Filed: April 16, 2002 :
Attorney Docket No. 2008.0043 (57888-034 NEW) :

ON PETITION

This is a decision on the petitions under 37 CFR 1.181 and 37 CFR 1.137(a), filed August 27, 2004 (certificate of mailing date August 25, 2004).

The petition under 37 CFR 1.181 is **DISMISSED**.

The petition under 37 CFR 1.137(a) is **DISMISSED**.

Any further petition to revive the above-identified application must be submitted within TWO (2) MONTHS from the mail date of this decision. Extensions of time under 37 CFR 1.136(a) are permitted. The reconsideration request should include a cover letter entitled "Petition under 37 CFR 1.137." This is **not** final agency action within the meaning of 5 U.S.C. § 704.

The above-identified application became abandoned for failure to timely submit the issue fee in response to the Notice of Allowance and Fee(s) Due, mailed October 20, 2003, which set a statutory period for reply of three (3) months. Accordingly, the above-identified application became abandoned on January 21, 2004. A Notice of Abandonment was mailed on August 9, 2004.

The Office acknowledges receipt of a completed PTOL-85b and a $1,330.00 issue fee, both filed with the instant petition.

PETITION UNDER 37 CFR 1.181

The assignee of the present application is McKechnie Vehicle Components (USA) Inc.. Petitioner asserts that on or about August -September 2003 all of McKenchnie Vehichle Components' patent files were transferred from the law firm of Bliss McGlynn, P.C. to the law firm of Butzel Long, P.C. According to the petition, the arrangement was that the Bliss McGlynn firm would forward USPTO correspondence in the transferred McKechnie Vehicle Components' applications to the Butzel Long firm and the Butzel Long firm would handle prosecution. In December 2003 Attorney Gzybowski of the Butzel Long firm became aware that the Bliss McGlynn firm was no longer forwarding McKenchnie Vehicle Components' USPTO correspondence to the Butzel Long firm. As such, the October 20, 2003 Notice of Allowance and Fee(s) Due was never received by the Butzel Long firm.

Petitioner requests withdrawal of the holding of abandonment. However, the members of the Bliss McGlynn firm were the attorneys of record when the October 20, 2003 Notice of Allowance and Fee(s) Due was mailed. A review of the application file reveals that the October 20, 2003 Notice of Allowance and Fee(s) Due was properly mailed to the then-correspondence address of record – the Bliss McGlynn firm.

Petitioner has not provided persuasive evidence that the correspondence was not received at the correspondence address of record or that a reply was timely mailed/filed. Therefore, the application became abandoned by operation of law on January 21, 2004 for failure to reply to the October 20, 2003 Notice of Allowance and Fee(s) Due.

The petition under 37 CFR 1.181 is dismissed.

PETITION UNDER 37 CFR 1.137(a)

A grantable petition to revive an abandoned application under 37 CFR 1.137(a) must be accompanied by (1) the required reply, unless previously filed. In a nonprovisional application abandoned for failure to prosecute, the required reply may be met by the filing of a continuing application. In an application or patent, abandoned or lapsed for failure to pay the issue fee or any portion thereof, the required reply must be the payment of the issue fee or any outstanding balance thereof; (2) the petition fee as set forth in § 1.17(l); (3) a showing to the satisfaction of the Commissioner that the entire delay in filing the required reply from the due date for the reply until the filing of a grantable petition pursuant to this paragraph was unavoidable; and (4) any terminal disclaimer (and fee as set forth in § 1.20 (d)) required pursuant to paragraph (c) of this section. This petition does not satisfy requirement (3).

Regarding (3), the showing of record is inadequate to establish unavoidable delay within the meaning of 37 CFR 1.137(a). Specifically, an application is "unavoidably" abandoned only where petitioner, or counsel for petitioner, takes all action necessary for a proper response to the outstanding Office action, but through the intervention of unforeseen circumstances, such as failure of mail, telegraph, telefacsimile, or the negligence of otherwise reliable employees, the response is not timely received in the Office. Ex parte Pratt, 1887 Dec. Comm'r Pat. 31 (Comm'r Pat. 1887).

The Commissioner may revive an abandoned application if the delay in responding to the relevant outstanding Office requirement is shown to the satisfaction of the Commissioner to have been "unavoidable". 35 USC § 133. Decisions on reviving abandoned applications have adopted the reasonably prudent person standard in determining if the delay was unavoidable. Ex parte Pratt, 1887 Dec. Comm'r Pat. 31, 32-33 (Comm'r Pat. 1887)(the term 'unavoidable' "is applicable to ordinary human affairs, and requires no more or greater care or diligence than is generally used and observed by prudent and careful men in relation to their most important business"); In re Mattullath, 38 App. D.C. 497, 514-15 (D.C. Cir. 1912); Ex parte Henrich, 1913 Dec. Comm'r Pat. 139, 141 (Comm'r Pat. 1913). In addition, decisions on revival are made on a "case-by-case basis, taking all the facts and circumstances into account." Smith v. Mossinghoff, 671 F.2d 533, 538, 213 USPQ 977, 982 (D.C. Cir. 1982). Finally, a petition to revive an application as unavoidably abandoned cannot be granted where a petitioner has failed to meet his or her burden of establishing the cause of the unavoidable delay. Haines v. Quigg, 673 F. Supp. 314, 5 USPQ2d 1130 (N.D. Ind. 1987).

In the instant case, petitioner has failed to provide adequate evidence that the delay was unavoidable. Petitioner asserts that the delay in payment of the issue fee was unavoidable due to the Bliss McGlynn firm's failure to forward the correspondence at issue to the Butzel Long firm.

Because petitioner was represented by registered practitioners, the Office must rely on the actions or inactions of the duly authorized and voluntarily chosen representatives of the petitioner, and the petitioner is bound by the consequences of those actions or inactions. Link v. Wabash, 370 U.S. 626, 633-34 (1962). If the attorneys made any errors, petitioner is bound by such errors.[1]

An attorney must act reasonably and prudently.

> If [the] attorney somehow breach[es] his duty of care to plaintiff, then plaintiff may have certain other remedies available to him against his attorney. He cannot, however, ask the court to overlook [the attorney's] action or inaction with regard to the patent application. He hired the [attorney] to represent him. [The attorney's] actions must be imputed to him.[2]

The Seventh Circuit has stated,

> The other assumption is that, if the complainants failed in their application through the negligence of their attorney, the delay would be unavoidable, which is wholly unwarranted in the law. It is of the very nature of negligence that it should not be unavoidable, otherwise it would not be actionable. The negligence of the attorney would be the negligence of the [client]. The purpose of the statute was to put an end to such pleas, and there would be no limit to a renewal of these applications if every application, however remote, could be considered under the plea of negligence of attorneys, by whom their business is generally conducted.[3]

The United States Court of Appeals for the Federal Circuit has stated,

> If we were to hold that an attorney's negligence constitutes good cause for failing to meet a PTO requirement, the PTO's rules could become meaningless. Parties could regularly allege attorney negligence in order to avoid an unmet requirement.[4]

In the instant case, the attorneys responsible for the prosecution of this case did not act as reasonable and prudent persons in relation to their most important business. The empowered attorneys of the Bliss McGlynn firm were responsible for the prosecution of this application. They

---

[1] See California Med. Products v. Technol Med. Products, 921 F. Supp. 1219, 1259 (D. Del. 1995) (citing Smith v. Diamond, 209 U.S.P.Q. 1091, 1093 (D.D.C. 1981) (citing Link v. Walbash Railroad Co., 370 U.S. 626, 8 L. Ed. 2d 734, 82 S. Ct. 1386 (1962))).

[2] Haines v. Quigg, 673 F. Supp. 314, 317, 5 U.S.P.Q. 2d (BNA) 1130 (citing Link v. Walbash Railroad Co., 370 U.S. 626, 8 L. Ed. 2d 734, 82 S. Ct. 1386 (1962) ("Petitioner voluntarily chose his attorney as his representative in the action and he cannot now avoid the consequences of the acts or omissions of this freely selected agent ... Each party is deemed bound by the acts of his lawyer-agent and is considered to have 'notice of all facts, notice of which can be charged upon the attorney.'" (emphasis added); Inryco, Inc. v. Metropolitan Engineering Co., Inc., 708 F.2d 1225, 1233 (7th Cir. 1983) ("Courts hesitate to punish a client for its lawyers gross negligence, especially when the lawyer affirmatively misled the client" but "if the client freely chooses counsel, it should be bound to counsel's actions."); see also Wei v. State of Hawaii, 763 F. 2d 370, 372 (9th Cir. 1985); LeBlanc v. I.N.S., 715 F.2d 685, 694 (1st Cir. 1983)). See also Smith v. Diamond, 209 U.S.P.Q. (BNA) 1091 (D. D.C. 1981).

[3] Lay v. Indianapolis Brush & Broom Mfg. Co., 120 F. 831, 836 (1903).

[4] Huston v. Ladner, 973 F.2d 1564, 1567, 23 U.S.P.Q.2D (BNA) 1910 (Fed. Cir. 1992).

did not take care to ensure a timely reply to the Notice of Allowance and Fee(s) Due was filed.

The assignee must have been aware that their applications were being transferred from the Bliss McGlynn firm to the Butzel Long firm from August 2003 at the latest. The assignee did not take steps to change the correspondence address of record and revoke the prior power of attorney until February 2004. Instead of promptly notifying the USPTO of a change in power of attorney and correspondence address, the assignee relied on their attorneys of record to forward USPTO mail to the new firm. Unfortunately, the attorneys of record did not act as reasonable prudent people with respect to their most important business. Petitioner is bound by the actions/inactions of the attorneys of record.

The petition under 37 CFR 1.137(a) is dismissed.

ALTERNATIVE VENUE

The facts recited in the instant petition are those typically encountered in a petition to revive under an unintentional standard. Petitioner should consider filing a petition stating that the delay was unintentional. Public Law 97-247, § 3, 96 Stat. 317 (1982), which revised patent and trademark fees, amended 35 U.S.C. § 41(a)(7) to provide for the revival of an "unintentionally" abandoned application without a showing that the delay in prosecution or in late payment of an issue fee was "unavoidable." This amendment to 35 U.S.C. § 41(a)(7) has been implemented in 37 CFR 1.137(b). An "unintentional" petition under 37 CFR 1.137(b) must be accompanied by the $1,500.00 petition fee.

The filing of a petition under 37 CFR 1.137(b) cannot be intentionally delayed and therefore must be filed promptly. A person seeking revival due to unintentional delay can not make a statement that the delay was unintentional unless the entire delay, including the delay from the date it was discovered that the application was abandoned until the filing of the petition to revive under 37 CFR 1.137(b), was unintentional. A statement that the delay was unintentional is not appropriate if petitioner intentionally delayed the filing of a petition for revival under 37 CFR 1.137(b).

Further correspondence with respect to this matter should be addressed as follows:

By mail: Mail Stop PETITION
Commissioner for Patents
Post Office Box 1450
Alexandria, VA 22313-1450

By hand: U.S. Patent and Trademark Office
Customer Service Window, Mail Stop Petition
Randolph Building
401 Dulany Street
Alexandria, VA 22314

By FAX: (703) 872-9306 – ATTN: Office of Petitions

Telephone inquiries concerning this decision should be directed to the undersigned at (571) 272-3230.

E. Shirene Willis

E. Shirene Willis
Senior Petitions Attorney
Office of Petitions
Office of the Deputy Commissioner
for Patent Examination Policy

UNITED STATES PATENT AND TRADEMARK OFFICE

Commissioner for Patents
United States Patent and Trademark Office
P.O. Box 1450
Alexandria, VA 22313-1450
www.uspto.gov

MICHAEL S. GZYBOWSKI
BUTZEL LONG
350 SOUTH MAIN STREET
SUITE 300
ANN ARBOR MI 48104

COPY MAILED

APR 15 2005

OFFICE OF PETITIONS

In re Application of :
Eikhoff, et al. :
Application No. 10/123,499 :
Filed: April 16, 2002 :
Attorney Docket No. 2008.0043 (57888-034 NEW) :

ON PETITION

This is a decision on the petition under 37 CFR 1.137(b), filed March 7, 2005.

The above-identified application became abandoned for failure to timely submit the issue fee in response to the Notice of Allowance and Fee(s) Due, mailed October 20, 2003, which set a statutory period for reply of three (3) months. Accordingly, the above-identified application became abandoned on January 21, 2004. A Notice of Abandonment was mailed on August 9, 2004.

Applicants have submitted a reply in the form of the issue fee and completed PTOL-85b, an acceptable statement of the unintentional nature of the delay in responding to the October 20, 2003 Notice of Allowance and Fee(s) Due, and the petition fee.[1]

The petition under 37 CFR 1.137(b) is **GRANTED**.

After the mailing of this decision the application will be forwarded to Publications Division for processing into a patent.

Telephone inquiries concerning this decision should be directed to the undersigned at (571) 272-3230.

E. Shirene Willis
Senior Petitions Attorney
Office of Petitions
Office of the Deputy Commissioner
for Patent Examination Policy

---

[1] Pursuant to petitioners' authorization, deposit account no. 12-2136 will be charged the required $1,500.00 petition fee and the $70.00 balance due towards the issue fee.

UNITED STATES PATENT AND TRADEMARK OFFICE

Commissioner for Patents
United States Patent and Trademark Office
P.O. Box 1450
Alexandria, VA 22313-1450
www.uspto.gov

INTELLECTUAL PROPERTY GROUP
PILLSBURY WINTHROP LLP
1600 TYSONS BOULEVARD
MCLEAN, VA 22102

COPY MAILED

NOV 12 2004

OFFICE OF PETITIONS

ON PETITION

In re Application of
Trevor Graham Blease, et al.
Application No. 10/123,527
Filed: April 17, 2002
Attorney Docket No. P0282479

This is a decision on the petition under 37 CFR 1.137(b) to revive the above-identified application, filed September 13, 2004.

The petition is GRANTED.

The application became abandoned for failure to pay the issue fee on or before July 14, 2004. Receipt is acknowledged of the requisite issue fee on September 13, 2004.

37 CFR 1.137(b)(3) requires a statement that the entire delay in filing the required reply from the due date for the reply until the filing of a grantable petition pursuant to 37 CFR 1.137(b) was unintentional. While it is not apparent whether the person signing the statement of unintentional delay was in a position to have firsthand or direct knowledge of the facts and circumstances of the delay at issue, such statement is being treated as having been made as the result of a reasonable inquiry into the facts and circumstances of such delay. See 37 CFR 10.18(b) and Changes to Patent Practice and Procedure; Final Rule Notice, 62 Fed. Reg. 53131, 53178 (October 10, 1997), 1203 Off. Gaz. Pat. Office 63, 103 (October 21, 1997). In the event that such an inquiry has not been made, petitioner must make such an inquiry. If such inquiry results in the discovery that it is not correct that the entire delay in filing the required reply from the due date for the reply until the filing of a grantable petition pursuant to 37 CFR 1.137(b) was unintentional, petitioner must notify the Office.

The person signing the instant petition requests a change of correspondence address to the address given in the instant petition. There is, however, no indication that the person signing the instant petition was ever given a power of attorney or authorization of agent to prosecute the above-identified application. However, in accordance with 37 CFR 1.34(a), the signature of Paul L. Sharer appearing on the petition shall constitute a representation to the United States Patent and Trademark Office that he is authorized to represent the particular party on whose behalf he acts. A courtesy copy of this decision is being mailed to petitioner. If Mr. Sharer desires to receive future correspondence regarding this application, then the appropriate power of attorney or authorization of agent must be submitted. All future correspondence regarding this application file will be directed solely to the address of record.

The application is being forwarded to Publishing Division.

Telephone inquires related to this decision should be directed to the undersigned at (571) 272-3204. Telephone inquiries related to processing at Publishing Division should be directed to (703) 305-8283.

Sherry D. Brinkley
Petitions Examiner
Office of Petitions
Office of the Deputy Commissioner
for Patent Examination Policy

cc: PAUL L. SHARER
MAYER BROWN ROE & MAW LLP
1909 K STREET, NW
WASHINGTON, DC 20006

UNITED STATES PATENT AND TRADEMARK OFFICE

Commissioner for Patents
United States Patent and Trademark Office
P.O. Box 1450
Alexandria, VA 22313-1450
www.uspto.gov

FOLEY HOAG, LLP
PATENT GROUP, WORLD TRADE CENTER WEST
155 SEAPORT BLVD
BOSTON MA 02110

COPY MAILED

JUL 0 5 2006

OFFICE OF PETITIONS

In re Application of	:	
Susil et al.	:	DECISION ON PETITION
Application No. 10/123,534	:	TO WITHDRAW
Filed: April 15, 2002	:	FROM RECORD
Attorney Docket No. SUW-007.02	:	

This is a decision on the Request to Withdraw as attorney or agent of record under 37 C.F.R. § 1.36(b), filed January 27, 2006.

The request is **APPROVED**.

A grantable request to withdraw as attorney/agent of record must be signed by every attorney/agent seeking to withdraw or contain a clear indication that one attorney is signing on behalf of another/others. A request to withdraw will not be approved unless at least 30 (thirty) days would remain between the date of approval and the later of the expiration date of a time to file a response or the expiration date of the maximum time period which can be extended under 37 C.F.R. § 1.136(a).

The request was signed by Scott E. Kamholz on behalf of all attorneys of record who are associated with Customer Number 25181. All attorneys/agents associated with Customer Number 25181 have been withdrawn. Applicants are reminded that there is no attorney of record at this time.

The request to change the correspondence of record is not acceptable as the requested correspondence address is not that of: (1) the first named inventor; or (2) the assignee of the entire interest who has intervened in the instant application. Since the Post Office address of the first inventor is not listed in the Oath/Declaration, all future communications from the Office will continue to be directed to the *second* named inventor at the first below-listed address until otherwise properly notified by the applicants.

Telephone inquires concerning this decision should be directed to Petitions Examiner Liana Chase at (571) 272-3206. All other inquires concerning either the examination or status of the application should be directed to the Technology Center.

David Bucci
Petitions Examiner
Office of Petitions

Cc:

ERGIN ATALAR
5206 WOODSTOVE LANE
COLUMBIA, MD 21045

BRYANT GOLD
ADVANCED BIONICS CORPORATION
25129 RYE CANYON ROAD
VALENCIA, CA 91355

UNITED STATES PATENT AND TRADEMARK OFFICE

Commissioner for Patents
United States Patent and Trademark Office
P.O. Box 1450
Alexandria, VA 22313-1450
www.uspto.gov

COPY MAILED

MAY 2 2 2008

OFFICE OF PETITIONS

ERGIN ATALAR
5206 WOODSTOVE LANE
COLUMBIA MD 21045

In re Application of
SUSIL, Robert C. et al.
Application No. 10/123,534
Filed: April 15, 2002
Attorney Docket No.

DECISION ON PETITION
TO WITHDRAW
FROM RECORD

This is a decision on the Request to Withdraw as attorney or agent of record under 37 C.F.R. § 1.36(b), filed February 15, 2008.

The request is **NOT APPROVED**.

A grantable request to withdraw as attorney/agent of record must be signed by every attorney/agent seeking to withdraw or contain a clear indication that one attorney is signing on behalf of another/others. A request to withdraw will not be approved unless at least 30 (thirty) days would remain between the date of approval and the later of the expiration date of a time to file a response or the expiration date of the maximum time period which can be extended under 37 C.F.R. § 1.136(a).

The Office cannot approve the request at this time since the reasons provided do not meet any of the conditions under the mandatory or permissive categories enumerated in 37 CFR 10.40. Section 10.40 of Title 37 of the Code of Federal Regulation states, "[a] practitioner shall not withdraw from employment in a proceeding before the Office without permission from the Office[.]" More specifically, 37 CFR 10.40 states, "[i]f paragraph (b) of this section is not applicable, a practitioner may not request permission to withdraw in matter pending before the Office unless such request or such withdrawal is" for one the permissive reasons listed in 37 CFR 10.40(c). The reason set forth in the request, ownership transfer, does not meet any of the conditions set forth in 37 CFR 10.40.

In order to request or take action in a patent matter, the assignee must establish its ownership of the patent to the satisfaction of the Director. In this regard, a Statement under 37 CFR 3.73(b) must have either: (i) documentary evidence of a chain of title from the original owner to the assignee (*e.g.*, copy of an executed assignment), and a statement affirming that the documentary evidence of the chain of title from the original owner to the assignee was or concurrently is being submitted for recordation pursuant to § 3.11; or (ii) a statement specifying where documentary

evidence of a chain of title from the original owner to the assignee is recorded in the assignment records of the Office (*e.g.*, reel and frame number).

All future communications from the Office will continue to be directed to the above-listed address until otherwise notified by applicant.

Telephone inquiries concerning this decision should be directed to Tredelle Jackson at 571-272-2783.

Tredelle D. Jackson
Petitions Examiner
Office of Petitions

UNITED STATES PATENT AND TRADEMARK OFFICE

Commissioner for Patents
United States Patent and Trademark Office
P.O. Box 1450
Alexandria, VA 22313-1450
www.uspto.gov

ERGIN ATALAR
5206 WOODSTOVE LANE
COLUMBIA MD 21045

MAILED

JUN 30 2010

OFFICE OF PETITIONS

In re Application of	:	
SUSIL, Robert C. et al.	:	
Application No. 10/123,534	:	ON PETITION
Filed: April 15, 2002	:	
Attorney Docket No.	:	

This is a decision on the petition under 37 CFR 1.137(b), filed March 4, 2010 to revive the above-identified application.

The petition is **DISMISSED**.

Any request for reconsideration of this decision must be submitted within TWO (2) MONTHS from the mail date of this decision. Extensions of time under 37 CFR 1.136(a) are permitted. The reconsideration request should include a cover letter entitled "Renewed Petition under 37 CFR 1.137(b)." This is **not** a final agency action within the meaning of 5 U.S.C. § 704.

The above-identified application became abandoned for failure to submit the issue fee and publication fee in a timely manner in reply to the Notice of Allowance and Fee(s) Due, mailed November 18, 2009, which set a statutory period for reply of three (3) months. Accordingly, by operation of law, the above-identified application became abandoned on February 19, 2009.

A grantable petition under 37 CFR 1.137(b) must be accompanied by: (1) the required reply, unless previously filed; (2) the petition fee as set forth in 37 CFR 1.17(m); (3) a statement that the entire delay in filing the required reply from the due date for the reply until the filing of a grantable petition pursuant to 37 CFR 1.137(b) was unintentional; and (4) any terminal disclaimer (and fee as set forth in 37 CFR 1.20(d)) required by 37 CFR 1.137(d). Where there is a question as to whether either the abandonment or the delay in filing a petition under 37 CFR 1.137 was unintentional, the Director may require additional information. See MPEP 711.03(c)(II)(C) and (D). The instant petition lacks item(1). The issue and publication fee(s) not been received.

While the revival of applications abandoned for failure to timely prosecute and for failure to timely pay the issue fee are incorporated together in 37 CFR 1.137, the statutory

provisions for the revival of an application abandoned for failure to timely prosecute and for failure to timely submit the issue fee are mutually exclusive. See Brenner v. Ebbert, 398 F.2d 762, 157 USPQ 609 (D.C. Cir. 1968). 35 U.S.C. 151 authorizes the acceptance of a delayed payment of the issue fee, if the issue fee "is submitted ... and the delay in payment is shown to have been unavoidable." 35 U.S.C. 41(a)(7) likewise authorizes the acceptance of an "unintentionally delayed payment of the fee for issuing each patent." Thus, 35 U.S.C. 41(a)(7) and 151 each require payment of the issue fee as a condition of reviving an application abandoned or patent lapsed for failure to pay the issue fee. Therefore, the filing of a continuing application without payment of the issue fee or any outstanding balance thereof is not an acceptable reply in an application abandoned or patent lapsed for failure to pay the issue fee or any portion thereof.

The Notice of Allowance requires the timely payment of the issue fee in effect on the date of its mailing to avoid abandonment of the application. In instances in which there is an increase in the issue fee by the time of payment of the issue fee required in the Notice of Allowance, the Office will mail a notice requiring payment of the balance of the issue fee then in effect. See In re Mills, 12 USPQ2d 1847, 1848 (Comm'r Pat. 1989). The phrase "for failure to pay the issue fee or any portion thereof" applies to those instances in which the applicant fails to pay either the issue fee required in the Notice of Allowance or the balance of the issue fee required in a subsequent notice. In such instances, the reply must be the issue fee then in effect, if no portion of the issue fee was previously submitted, or any outstanding balance of the issue fee then in effect, if a portion of the issue fee was previously submitted. In an application abandoned for failure to pay the publication fee, the required reply must include payment of the publication fee. Even if an application abandoned for failure to pay the publication fee is being revived solely for purposes of continuity with a continuing application, the petition to revive under 37 CFR 1.137 must include payment of the publication fee.

There is no indication that the person signing the petition was ever given a power of attorney or authorization of agent to prosecute the application. If the person signing the petition desires to receive future correspondence regarding this application, the appropriate power of attorney or authorization of agent must be submitted. While a courtesy copy of this decision is being mailed to the person signing the petition, all future correspondence will be directed to the address currently of record until appropriate instructions are received.

Telephone inquiries concerning this decision should be directed to the undersigned at (571) 272-7099.

David A. Bucci
Petitions Examiner
Office of Petitions

CC: BRUCE E. BLACK
DARBY & DARBY P.C.
P.O. BOX 770
CHURCH STREET STATION
NEW YORK, NY 10008-0770

UNITED STATES PATENT AND TRADEMARK OFFICE

COMMISSIONER FOR PATENTS
UNITED STATES PATENT AND TRADEMARK OFFICE
P.O. BOX 1450
ALEXANDRIA, VA 22313-1450
www.uspto.gov

KLEINBERG & LERNER, L.L.P.
2049 CENTURY PARK EAST
SUITE 1080
LOS ANGELES, CA 90067

COPY MAILED

FEB 0 3 2006

OFFICE OF PETITIONS

In re Application of :
Paul M. Tsou : ON PETITION
Application No. 10/123,598 :
Filed: April 18, 2002 :
Attorney Docket Number: :
13,085 :

This is a decision on the petition under 37 CFR 1.137(b), filed March 14, 2005. The petition is being treated under the unintentional provisions of 37 CFR 1.137(f). The delay in treating this petition is regretted.

This Petition is hereby **granted**.

The above-identified application became abandoned pursuant to 35 USC 122 (b)(2)(B)(iii) for failure to timely notify the Office of the filing of an application in a foreign country, or under a multinational international agreement, the requires publication of applications 18 months after filing.

A petition under 37 CFR 1.137(f) must be accompanied by: (1) the reply, which is met by the notification of such filing in a foreign country or under a multinational treaty[1]; (2) the petition fee as set forth in 37 CFR 1.17(m); and (3) a statement that the entire delay in filing the required reply from the due date of the reply until the filing of a grantable petition was unintentional. The Commissioner may require additional information where there is a question whether the delay was unintentional.

[1] The filing of a petition under this section will not relieve application of the obligation to reply to any outstanding Office action.

The instant petition has been found in compliance with 37 CFR 1.137(f). Accordingly, the failure to timely notify the Office of a foreign or international filing within 45 days as provided by 35 USC 122(b)(2)(B)(iii) is accepted as having been unintentionally delayed.

The previous Request and Certification under 35 U.S.C. § 122(b)(2)(B)(I) has been rescinded.

The fee for a petition treated under the unintentional provisions of 37 CFR 1.137(f) is the same for a petition to revive an application under 37 CFR 1.137(b), here $750.00. Applicant's deposit account has been charged an additional $350.00 to cover the balance of the petition fee.

This application is being referred to the Publishing Division for publishing of the application in due course. The publication date of the application will be available after revival of the application and Office records have been updated. A decision on the petition to revive the application follows under separate cover.

Telephone inquiries concerning this matter should be directed to the undersigned at (571) 272-3232.

Derek L. Woods
Attorney
Office of Petitions

UNITED STATES PATENT AND TRADEMARK OFFICE

COMMISSIONER FOR PATENTS
UNITED STATES PATENT AND TRADEMARK OFFICE
P.O. BOX 1450
ALEXANDRIA, VA 22313-1450
www.uspto.gov

KLEINBERG & LERNER, L.L.P.
2049 CENTURY PARK EAST
SUITE 1080
LOS ANGELES, CA 90067

COPY MAILED

FEB 0 3 2006

OFFICE OF PETITIONS

In re Application of :
Paul M. Tsou : ON PETITION
Application No. 10/123,598 :
Filed: April 18, 2002 :
Attorney Docket Number: :
13,085 :

This is a decision on the Petition under 37 CFR 1.137(a), filed October 12, 2005 (Certificate of Mailing dated October 6, 2005, to revive the above-identified application.

This Petition is hereby **granted**.

The above-identified application became abandoned for failure to timely and properly reply to the non-final Office action, mailed December 3, 2004. The Notice set a non-extendable three (3) month period for reply. No response having been received, the application became abandoned March 4, 2005. A Notice of Abandonment was mailed June 13, 2005.

With the instant petition, Applicant has demonstrated that the abandonment of the application was unavoidable, thus satisfying the requirements of a grantable petition under 37 CFR 1.137(a). Applicant has also included a reply to the non-final Office action in the form of an Amendment and Response. Accordingly, the petition is granted.

This application is being referred to Technology Center 3732 for processing of the Amendment and Response filed with the instant petition on October 12, 2005.

Telephone inquiries concerning this decision should be directed to the undersigned at (571) 272-3232.

Derek L. Woods
Attorney
Office of Petitions

UNITED STATES PATENT AND TRADEMARK OFFICE

Commissioner for Patents
United States Patent and Trademark Office
P.O. Box 1450
Alexandria, VA 22313-1450
www.uspto.gov

MARVIN H. KLEINBERG, ESQ.
SUITE 1080
2049 CENTURY PARK EAST
LOS ANGELES, CA 90067

COPY MAILED

MAY 22 2008

In re Application of	:	
Paul M. Tsou	:	
Application No. 10/123,598	:	DECISION ON PETITION
Filed: April 16, 2002	:	
Attorney Docket No. 455770.13085	:	

This is a decision on the petition under the unintentional provisions of 37 CFR 1.137(b), filed August 29, 2007, to revive the above-identified application.

The petition is **GRANTED**.

The application became abandoned for failure to reply in a timely manner to the non-final Office action mailed, August 25, 2006, which set a shortened statutory period for reply of three (3) months. No extensions of time under the provisions of 37 CFR 1.136(a) were obtained. Accordingly, the application became abandoned on November 26, 2006.

The petition satisfies the requirements of 37 CFR 1.137(b) in that petitioner has supplied (1) the reply in the form of an amendment, (2) the petition fee of $750, and (3) a proper statement of unintentional delay.

Telephone inquiries concerning this decision should be directed to undersigned at (571)272-1642.

This application is being referred to Technology Center AU 3733 for appropriate action by the Examiner in the normal course of business on the reply received August 29, 2007.

April M. Wise
Petitions Examiner
Office of Petitions

UNITED STATES PATENT AND TRADEMARK OFFICE

Commissioner for Patents
United States Patent and Trademark Office
P.O. Box 1450
Alexandria, VA 22313-1450
www.uspto.gov

DAVID J ARCHER
9790 FOREST PRESERVE ROAD
DURAND IL 61024

COPY MAILED
JAN 17 2008
OFFICE OF PETITIONS

In re Application of :
Richard L. Feller :
Application No. 10/123,611 :
Filed: April 16, 2002 :
Attorney Docket No. 1147 :

NOTICE

This is a notice regarding your request for acceptance of a fee deficiency submission under 37 CFR 1.28. On September 1, 1998, the Court of Appeals for the Federal Circuit held that 37 CFR 1.28(c) is the sole provision governing the time for correction of the erroneous payment of the issue fee as a small entity. **See DH Technology v. Synergystex International, Inc. 154 F.3d 1333, 47 USPQ2d 1865 (Fed. Cir. Sept. 1, 1998).**

The Office no longer investigates or rejects original or reissue applications under 37 CFR 1.56. **1098 Off. Gaz. Pat. Office 502 (January 3, 1989)**. Therefore, nothing in this Notice is intended to imply that an investigation was done.

Your fee deficiency submission under 37 CFR 1.28 is hereby **ACCEPTED**.

This application is no longer entitled to small entity status. Accordingly, all future fees paid in this application must be paid at the large entity rate.

Inquiries related to this communication should be directed to the undersigned at (571)272-3213.

Cheryl Gibson-Baylor
Petitions Examiner
Office of Petitions

Irvin Dingle
Petitions Examiner

UNITED STATES PATENT AND TRADEMARK OFFICE

Commissioner for Patents
United States Patent and Trademark Office
P.O. Box 1450
Alexandria, VA 22313-1450
www.uspto.gov

WALKER DIGITAL MANAGEMENT LLC
2 HIGH RIDGE PARK
STAMFORD CT 06905

COPY MAILED

FEB 19 2008

OFFICE OF PETITIONS

In re Application of	:	
Walker, et al.	:	DECISION ACCORDING STATUS
Application No. 10/123,634	:	UNDER 37 CFR 1.47(a)
Filed: April 15, 2002	:	AND GRANTING REQUEST
Attorney Docket No. 00-116	:	UNDER 37 CFR 1.48(a)

This is in response to the petition under 37 CFR 1.47(a), and the request to correct inventorship pursuant to 37 CFR 1.48(a), both filed February 1, 2008.

The request under 37 CFR 1.48(a) is **GRANTED**.

The petition under 37 CFR 1.47(a) is **GRANTED**.

Petitioner has shown that added inventor (pursuant to the request under 37 CFR 1.48) Kevin Goldman has refused to execute the declaration after having been mailed the application papers to their last known address.

Office records have been changed to reflect that Kevin Goldman is an inventor in the above-identified application.

The above-identified application and papers have been reviewed and found to be in compliance with 37 CFR 1.47(a). Accordingly, the above-identified application is hereby accorded Rule 1.47(a) status. As provided in 37 CFR 1.47(c), this Office will forward notice of this application's filing to the non-signing inventor at the last known address provided on the declaration. Notice of the filing of this application will also be published in the Official Gazette.

Receipt of the $130 fee for the request under 37 CFR 1.48 is acknowledged.

A petition under 37 CFR 1.47 requires a fee of $200. As such, that amount has been charged to Deposit Account No. 50-0271, as authorized.

The matter is being forwarded to Group Art Unit 2167 for consideration of the Amendment filed July 6, 2007.

Telephone inquiries related to this decision may be directed to the undersigned at (571)272-3207.

Cliff Congo
Petitions Attorney
Office of Petitions

UNITED STATES PATENT AND TRADEMARK OFFICE

Commissioner for Patents
United States Patent and Trademark Office
P.O. Box 1450
Alexandria, VA 22313-1450
www.uspto.gov

KEVIN L GOLDMAN
7 HARCOURT RD
SCARSDALE NY 10583

COPY MAILED

FEB 19 2008

OFFICE OF PETITIONS

In re Application of :
Jay S. Walker, Jose A. Suarez, Norman :
A. Goldstein, James A. Jorasch, Kevin :
L. Goldman, Peter F. Burgess, Geoffrey:
M. Gelman, Steven M. Santisi : LETTER
Application No. 10/123,634 :
Filed: April 15, 2002 :
Title: Method and Apparatus for
Marketing Supplemental Information

Dear Mr. Goldman:

You are named as a joint inventor in the above-identified United States patent application filed under the provisions of 35 USC 116 (United States Code) and 37 CFR 1.47(a), Rules of Practice in Patent Cases. Should a patent be granted on the application you will be designated therein as a joint inventor.

As a joint inventor, you are entitled to inspect any paper in the file wrapper of the application, order copies of all or any part thereof (at a prepaid cost per 37 CFR 1.19) or make your position of record in the application. Alternatively, you may arrange to do any of the preceding through a registered patent attorney or agent presenting written authorization from you. If you care to join the application, agent of record would presumably assist you. Joining in the application would entail the filing of an appropriate oath or declaration by you pursuant to 37 CFR 1.63.

Telephone inquiries regarding this communication should be directed to Petitions Attorney Cliff Congo at (571)272-3207. Requests for information regarding your application should be directed to the File Information Unit at (703) 308-2733. Information regarding how to pay for and order a copy of the application, or a specific paper in the application, should be directed to the Certification Division at (703) 308-9726 or 1-800-972-6382 (outside the Washington D.C. area).

Cliff Congo
Petitions Attorney
Office of Petitions

UNITED STATES PATENT AND TRADEMARK OFFICE

COMMISSIONER FOR PATENTS
UNITED STATES PATENT AND TRADEMARK OFFICE
WASHINGTON, D.C. 20231
www.uspto.gov

Paper No. 4

COPY MAILED

AUG 2 6 2002

OFFICE OF PETITIONS

THE PROCTOR & GAMBLE COMPANY
INTELLECTUAL PROPERTY DIVISION
WINTON HILL TECHNICAL CENTER - BOX 161
6110 CENTER HILL AVENUE
CINCINNATI, OH 45224

In re Application of :
West, et al. :
Application No. 10/123,652 :
Filed: April 16, 2002 :
Attorney Docket No.: 8530 :
For: PRE-MOISTENED ANTIBACTERIAL :
WIPE :

DECISION DISMISSING PETITION UNDER 37 CFR 1.47(a)

This decision is in response to the petition under 37 CFR 1.47(a), filed July 2, 2002.

The above-identified application was filed April 16, 2002 without an executed oath or declaration. Accordingly, on May 29, 2002, a "Notice to File Missing Parts of Application" was mailed, requiring an executed oath or declaration, and a surcharge for its late filing.

A grantable petition under 37 CFR 1.47(a) requires: (1) proof that the non-signing inventor, or in the present case, the non-signing legal representative of the deceased inventor, cannot be reached or refuses to sign the oath or declaration after having been presented with the application papers (specification, claims and drawings); (2) an acceptable oath or declaration in compliance with 35 U.S.C. §§ 115 and 116; (3) the petition fee and, if applicable, surcharge; and (4) a statement of the last known address of the non-signing inventor.

Payment of the petition fee for consideration under Rule 47 is a prerequisite for treat on the merits of the instant petition. The Office will not reach the merits of any petition under 37 CFR 1.47 lacking the requisite fee. Accordingly, the instant petition is **DISMISSED**.

Any renewed petition must include the required petition fee, currently $130.00.

Rule 47 applicant is given **TWO MONTHS** from the mailing date of this decision to reply. Any reply should be entitled "Request for Reconsideration of Petition under 37 CFR 1.47(a)," and may include an oath or declaration executed by the deceased inventor's legal representative. Failure to respond will result in abandonment of the application. Any extensions of time will be governed by 37 CFR 1.136(a).

Further correspondence with respect to this matter should be addressed as follows:

By mail: Commissioner for Patents

Box DAC
Washington, DC 20231

By FAX: (703) 308-6916
Attn: Office of Petitions

By hand: Crystal Plaza Four, Suite 3C23
2201 S. Clark Place
Arlington, VA

Telephone inquiries related to this decision may be directed to the undersigned at (703) 305-0310.

Alesia M. Brown
Petitions Attorney
Office of Petitions
Office of the Deputy Commissioner
for Patent Examination Policy

UNITED STATES PATENT AND TRADEMARK OFFICE

COMMISSIONER FOR PATENTS
UNITED STATES PATENT AND TRADEMARK OFFICE
WASHINGTON, D.C. 20231
www.uspto.gov

Paper No. 7

THE PROCTOR & GAMBLE COMPANY
INTELLECTUAL PROPERTY DIVISION
WINTON HILL TECHNICAL CENTER - BOX 161
6110 CENTER HILL AVENUE
CINCINNATI, OH 45224

COPY MAILED

DEC 18 2002

OFFICE OF PETITIONS

In re Application of
West, et al.
Application No. 10/123,652
Filed: April 16, 2002
Attorney Docket No.: 8530
For: PRE-MOISTENED ANTIBACTERIAL WIPE

DECISION DISMISSING PETITION UNDER 37 CFR 1.47(a)

This decision is in response to the renewed petition under 37 CFR 1.47(a), filed November 4, 2002.

The above-identified application was filed April 16, 2002 without an executed oath or declaration. Accordingly, on May 29, 2002, a "Notice to File Missing Parts of Application" was mailed, requiring an executed oath or declaration, and a surcharge for its late filing. A petition under 37 CFR 1.47(a) was filed July 2, 2002 and dismissed August 26, 2002.

A grantable petition under 37 CFR 1.47(a) requires: (1) proof that the non-signing inventor, or in the present case, the non-signing legal representative of the deceased inventor, cannot be reached or refuses to sign the oath or declaration after having been presented with the application papers (specification, claims and drawings); (2) an acceptable oath or declaration in compliance with 35 U.S.C. §§ 115 and 116; (3) the petition fee and, if applicable, surcharge; and (4) a statement of the last known address of the non-signing inventor.

As to item (1), petitioner has failed to establish that the legal representative of the deceased inventor received the application papers (specification, claims, drawings, and oath or declaration) and thereafter refused to sign the oath or declaration. Petitioner indicates that a declaration and assignment were mailed to the legal representative of the deceased inventor on May 2, 2002 and that thereafter the legal representative of the deceased inventor verbally refused to sign formal documents.

Petitioner is reminded that before a refusal to sign an oath or declaration can be alleged, it must be demonstrated that a *bona fide* effort has been made to present a copy of the application papers (specification, including claims, drawings, and oath or declaration) to the legal representative of the deceased inventor. Petitioner has presented no evidence that the legal representative was ever presented with a copy of the complete application papers for the instant application. While petitioner references a verbal refusal to execute formal papers, there is no indication that the refusal occurred after such time as the legal representative had been presented with a complete copy of the application papers.

Any renewed petition should be accompanied by evidence to

sufficiently establish that the legal representative received a complete copy of the application papers and thereafter refused to execute the declaration. A copy of the application papers should be sent to the last known address of the legal representative, or, if the legal representative is represented by counsel, to the address of the legal representative's attorney. Petitioner may wish to provide the Office copies of letters sent to the legal representative indicating the enclosure of the application papers (specification, claims, drawings, and oath or declaration). If after the legal representative receives the application papers and requests to execute the oath or declaration are refused, these facts should be set forth in a statement of facts signed by the person to whom the refusals were made and detailing with specificity the exact manner of the refusals. If a written refusal has been made, a copy of the written refusal should be included on renewed petition.

As to item (3), the required petition fee and surcharge (and necessary extension of time fee) have been charged to deposit account No. 16-2480 as authorized in the instant petition.

Rule 47 applicant is given **TWO MONTHS** from the mailing date of this decision to reply. Any reply should be entitled "Request for Reconsideration of Petition under 37 CFR 1.47(a)," and may include an oath or declaration executed by the deceased inventor's legal representative. Failure to respond will result in abandonment of the application. Any extensions of time will be governed by 37 CFR 1.136(a).

Further correspondence with respect to this matter should be addressed as follows:

By mail: Commissioner for Patents
Box DAC
Washington, DC 20231

By FAX: (703) 308-6916
Attn: Office of Petitions

By hand: Crystal Plaza Four, Suite 3C23
2201 S. Clark Place
Arlington, VA

Telephone inquiries related to this decision may be directed to the undersigned at (703) 305-0310.

Alesia M. Brown
Petitions Attorney
Office of Petitions
Office of the Deputy Commissioner
for Patent Examination Policy

UNITED STATES PATENT AND TRADEMARK OFFICE

COMMISSIONER FOR PATENTS
UNITED STATES PATENT AND TRADEMARK OFFICE
P.O. BOX 1450
ALEXANDRIA, VA 22313-1450
www.uspto.gov

Paper No. 11

THE PROCTOR & GAMBLE COMPANY
INTELLECTUAL PROPERTY DIVISION
WINTON HILL TECHNICAL CENTER - BOX 161
6110 CENTER HILL AVENUE
CINCINNATI, OH 45224

COPY MAILED
OCT 3 0 2003
OFFICE OF PETITIONS

In re Application of	
West, et al.	
Application No. 10/123,652	DECISION NOTING JOINDER
Filed: April 16, 2002	OF INVENTOR AND PETITION
Attorney Docket No.: 8530	UNDER 37 CFR 1.47(a) MOOT
For: PRE-MOISTENED ANTIBACTERIAL WIPE	

This decision is in response to the petition under 37 CFR 1.181 to withdraw the holding of abandonment for the above-identified application as well as a decision on the renewed petition under 37 CFR 1.47(a), filed August 4, 2003.

The above-identified application was filed April 16, 2002 without an executed oath or declaration. Accordingly, on May 29, 2002, a "Notice to File Missing Parts of Application" was mailed, requiring an executed oath or declaration, and a surcharge for its late filing. A petition under 37 CFR 1.47(a) was filed July 2, 2002 and dismissed August 26, 2002. A renewed petition under 37 CFR 1.47(a) was filed November 4, 2002 and dismissed December 18, 2002. Notice of abandonment was mailed July 29, 2003.

DECISION UNDER 37 CFR 1.181

Petitioner states that a renewed petition and a petition for an extension of time were submitted via facsimile July 29, 2003 in accordance with 37 CFR 1.6(d). Petitioner has included as evidence of timely transmission a copy of the submission purportedly filed via facsimile July 29, 2003.

The renewed petition has not been located in the Office, however, the facsimile transmission will be considered timely as it complies with the requirements of 37 CFR 1.8(b) in that (1) the Office was promptly informed of the previous timely transmission, (2) a copy of the previously transmitted

correspondence with certificate of facsimile transmission thereon has been supplied, and (3) statements attesting to the previous timely transmission have been submitted.

In view of the above, the Notice of Abandonment is hereby VACATED and the holding of abandonment is WITHDRAWN. The renewed petition will be accepted as having been timely filed via certificate of facsimile transmission on July 29, 2003.

DECISION UNDER 37 CFR 1.47(a)

In view of the joinder of the inventor, further consideration under 37 CFR 1.47(a) is not necessary and the petition is considered to be moot. This application does not have any Rule 1.47(a) status and no such status should appear on the file wrapper. This application need not be returned to this Office for further consideration under 37 CFR 1.47(a).

This application is being forwarded to the Office of Initial Patent Examination for further processing.

Telephone inquiries related to this decision may be directed to the undersigned at (703) 305-0310.

Alesia M. Brown
Senior Petitions Attorney
Office of Petitions

UNITED STATES PATENT AND TRADEMARK OFFICE

Commissioner for Patents
United States Patent and Trademark Office
P.O. Box 1450
Alexandria, VA 22313-1450
www.uspto.gov

AGILENT TECHNOLOGIES, INC.
LEGAL DEPARTMENT, DL429
INTELLECTUAL PROPERTY ADMINISTRATION
P.O. BOX 7599
LOVELAND, CO 80537-0599

COPY MAILED

FEB 22 2005

OFFICE OF PETITIONS

ON PETITION

In re Application of :
Curt A. Flory :
Application No. 10/123,656 :
Filed: April 16, 2002 :
Attorney Docket No. 10011426 :

This is a decision on the petition under 37 CFR 1.137(b), filed January 31, 2005, to revive the above-identified application.

The petition is **GRANTED.**

The above-identified application became abandoned for failure to reply in a timely manner to the final Office action mailed June 3, 2004, which set a shortened statutory period for reply of three (3) months. No extensions of time under the provision of 37 CFR 1.136(a) were obtained. Accordingly, the above-identified application became abandoned on September 4, 2004.

The above-identified application is being revived solely for purposes of continuity with a Request For Continued Examination (RCE) filed on January 31, 2005.

The file does not indicate a change of address has been submitted, although the address given on the petition differs from the address of record. If appropriate, a change of address should be filed in accordance with MPEP 601.03. A courtesy copy of this decision is being mailed to the address given on the petition; however, the Office will mail all future correspondence solely to the address of record.

Telephone inquiries concerning this decision should be directed to Irvin Dingle at (571) 272-3210.

This file is being forwarded to Technology Center AU 2879 for further processing.

Irvin Dingle
Petitions Examiner
Office of Petitions
Office of the Deputy Commissioner
for Patent Examination Policy

cc:
Paul S. Dara
Thomas, Kayden, Horstemeyer & Risley LLP
100 Galleria Parkway
Suite 1750
Atlanta, GA 30339

MAILED

AUG 2 2 2002

DIRECTOR'S OFFICE
TECHNOLOGY CENTER 3600

UNITED STATES PATENT & TRADEMARK OFFICE

UNDER SECRETARY OF COMMERCE FOR INTELLECTUAL PROPERTY AND DIRECTOR OF THE UNITED STATES PATENT AND TRADEMARK OFFICE
Washington, D.C. 20231

Alex C. Chen
Skjerven Morrill LLP
Suite 700
25 Metro Drive
San Jose, CA 95110-1349

Paper No. 3

In re application of
Taleb Sabouni
Application No. 10/123,698
Filed: April 15, 2002
For: MASS TRANSIT SECURITY SECTOR

: **DECISION ON PETITION**
: **TO MAKE SPECIAL**
: **(COUNTERING TERRORISM)**

This is in response to the petition filed on April 15, 2002 to make the above-identified application special on the basis of special examining procedure for certain new applications – inventions for countering terrorism as set forth in MPEP § 708.02 XI.

The Patent and Trademark Office will accord "special" status to patent applications relating to counter-terrorism inventions. The types of technology for countering terrorism could include, but are not limited to systems for detecting/identifying explosives, aircraft sensors/security systems, and vehicular barricades/disabling systems. Petitioner states that applicant's invention is directed to the creation of a passenger security force that would work to avoid hijackings of mass transit vehicles. This invention is therefore seen to be the type of technology described above.

Since all of the requirements for special status under MPEP § 708.02 XI have been met, the petition is **GRANTED**.

The required petition fee of $130.00 has been charged to Deposit Account 19-2386

The examiner is directed (1) to make an interference search for possible interfering applications, (2) to promptly examine this application out of turn, and (3) if any interfering application is discovered, to examine such application simultaneously and state in the first official letter of such application that it is being taken out of turn because of a possible interference.

Rd. 130.00
Petitions
8/23/02

Petitioner is advised that this application will continue to be special, throughout its entire prosecution and pendency, including interference or appeal, if any, only if petitioner makes a prompt ***bona fide*** effort, in response to each Office action, to place the application in condition for allowance, even if it is necessary to conduct an interview with the examiner to accomplish this purpose.

SUMMARY: Petition to Make Special **GRANTED**.

Kenneth J. Dorner
Special Programs Examiner
Technology Center 3600
(703)308-0866

kjd: 8/20/02

#10
DW

UNITED STATES PATENT AND TRADEMARK OFFICE

JUN 17 2003

UNDER SECRETARY OF COMMERCE FOR INTELLECTUAL PROPERTY AND
DIRECTOR OF THE UNITED STATES PATENT AND TRADEMARK OFFICE
WASHINGTON, DC 20231
www.uspto.gov

MAILED

JUN 17 2003

OFFICE OF THE DIRECTOR
TC 3600

Fish & Richardson P.C.
4350 La Jolla Village Drive
Suite 500
San Diego, California 92122

In re application of
Taleb Sabouni
Application No.10/123,698
Filed: April 15, 2002
For: MASS TRANSIT SECURITY VECTOR

DECISION ON REQUEST FOR REVOCATION OF THE REQUEST FOR WITHDRAWAL OF ATTORNEY

The request filed April 28, 2003 to revoke the request to withdraw as attorney is acknowledged. However, no such request to withdraw as attorney has been received by USPTO. Since no request for withdrawal as attorney has been made, a revocation of the request is not possible. Therefore, the request to revoke a withdrawal of attorney is **DISMISSED as Moot**.

The Power of Attorney remains unchanged from the change requested August 29, 2002, and accepted September 23, 2002.

Steven N. Meyers
Special Programs Examiner
Patent Technology Center 3600
(703) 308-3868
Facsimile No.: (703) 605-0586

SNM/dxn: 6/11/03

#8
DW

UNITED STATES PATENT AND TRADEMARK OFFICE

MAILED

JAN 20 2004

COMMISSIONER FOR PATENTS
UNITED STATES PATENT AND TRADEMARK OFFICE
P.O. BOX 1450
ALEXANDRIA, VA 22313-1450
www.uspto.gov

JAN 20 2004

OFFICE OF THE DIRECTOR
TC 3600

CARLSON, GASKEY & OLDS, P.C.
400 WEST MAPLE ROAD
SUITE 350
BIRMINGHAM, MI 48009

Paper No. 8

In re Application of
James M. Barbison, et al.
Application No. 10/123,706
Filed: April 16, 2002
For: SHOCK ABSORBER WITH TOROIDAL SOLENOID ADJUSTABLE DAMPING

DECISION ON PETITION TO WITHDRAW THE HOLDING OF ABANDONMENT

This is a decision on applicant's petition to withdrawal the holding of abandonment filed on December 10, 2003.

The petition is **GRANTED** in view of the following evidence of timely filing :

☐ Postcard receipt being dated_____.

☐ USPTO return facsimile receipt dated _____ which identifies the application by serial number and the type of Response that was filed on that date.

☒ Certificate of Mailing/Transmission signed on July 30, 2003. and supported by a statement under 37 C.F.R. 1.8(b)(3).

☐ Hand Delivery Receipt of the specific documents submitted dated _____.

☐ Certificate of Transmission of CPA under 37 C.F.R. 1.6 filed on _____.

☐ Express Mail Receipt under 37 C.F.R. 1.10 dated _____.

This application is being forwarded to the Supervisory Legal Instruments Examiner for entry of the response filed with the petition, then to the examiner for prompt action on the response.

cps/1/14/04

KENNETH J. DORNER
SPECIAL PROGRAMS EXAMINER
TECHNOLOGY CENTER 3600

UNITED STATES PATENT AND TRADEMARK OFFICE

Commissioner for Patents
United States Patent and Trademark Office
P.O. Box 1450
Alexandria, VA 22313-1450
www.uspto.gov

DALLAS OFFICE OF FULBRIGHT & JAWORSKI L.L.P.
2200 ROSS AVENUE
SUITE 2800
DALLAS TX 75201-2784

COPY MAILED
JUL 24 2006
OFFICE OF PETITIONS

In re Application of	:	
LAMB et al.	:	DECISION ON APPLICATION
Application No. 10/123,710	:	FOR
Filed: April 15, 2002	:	PATENT TERM ADJUSTMENT
Atty Docket No. 46030/P021US/ 10407090	:	

This is a decision on the "APPLICATION FOR PATENT TERM ADJUSTMENT UNDER 37 C.F.R. § 1.705(b)," filed March 27, 2006. Applicants request that the patent term adjustment at the time of the mailing of the Notice of Allowance be corrected from three hundred sixty-one (361) days to four hundred forty-two (442) days.

The application for patent term adjustment is **DISMISSED**.

On March 7, 2006, the Office mailed the Determination of Patent Term Adjustment under 35 U.S.C. 154(b) in the above-identified application. The Notice stated that the patent term adjustment (PTA) to date is 361 days. The instant application for patent term adjustment was timely filed[1]. Applicants dispute the reduction of 81 days of PTA for applicant delay in filing a supplemental response on December 20, 2004. Applicants state that this response, an information disclosure statement, was filed within three (3) months of receiving a foreign search report.

37 CFR 1.704(d) states:

A paper containing only an information disclosure statement in compliance with §§ 1.97 and 1.98 will not be considered a failure to engage in reasonable efforts to conclude prosecution (processing or examination) of the application under paragraphs (c)(6), (c)(8), (c)(9), or (c)(10) of this section if it is accompanied by a statement that *each item of information contained in the information disclosure statement was first cited in any*

[1] PALM records indicate that the Issue Fee was received on May 23, 2006.

communication from a foreign patent office in a counterpart application and that this communication was not received by any individual designated in § 1.56(c) more than thirty days prior to the filing of the information disclosure statement. This thirty-day period is not extendable. (Emphasis added)

The record fails to support a conclusion that the supplemental response is a paper containing only an information disclosure statement accompanied by the required statement set forth in § 1.704(d) and thus that applicant engaged in reasonable efforts to conclude prosecution of the above-identified application. A review of the file indicates that the information disclosure statement filed December 20, 2004 includes a statement referencing § 1.704(d) and acknowledging that the information disclosure statement was not received by any individual designated in § 1.56(c) more than thirty days prior to the filing of the statement. However, the accompanying statement does not state that each item of information contained in the information disclosure statement was *first* cited in any communication from a foreign patent office in a counterpart application, as required by § 1.704(d). It is recommended that any statement submitted with a renewed application for patent term adjustment include the exact language found in § 1.704(d). Accordingly, the reduction is warranted.

Receipt of the $200.00 fee set forth in 37 CFR 1.18(e) is acknowledged. No additional fees are required.

The application is being forwarded to Office of Publications for processing.

Telephone inquiries specific to this matter should be directed to Denise Pothier, at (571) 272-4787.

Nancy Johnson
Senior Petitions Attorney
Office of Petitions

UNITED STATES PATENT AND TRADEMARK OFFICE

Commissioner for Patents
United States Patent and Trademark Office
P.O. Box 1450
Alexandria, VA 22313-1450
www.uspto.gov
DIW Mcp-06

GOODWIN PROCTOR LLP
ATTN: DAVID GARROD, PH.D., ESQ.
599 LEXINGTON AVENUE
NEW YORK NY 10022

COPY MAILED

MAR 07 2006

OFFICE OF PETITIONS

In re Application of	:	
McAuliffe et al.	:	
Application No. 10/123,758	:	DECISION ON PETITION
Filed: 16 April, 2002	:	
Atty Docket No. V3328-002	:	

This is a decision on the petition filed on 16 September, 2005, under 37 CFR 1.137(b),[1] to revive the above-identified application.

The petition is **GRANTED**.

The application became abandoned on 23 October, 2004, for failure to timely reply to the Notice of Drawing Inconsistency With Specification, mailed on 22 September, 2004, which set a one (1) month period for reply. Notice of Abandonment was mailed on 18 February, 2005.

Petitioners have filed correction(s) to the specification as the required reply.

---

[1] Effective December 1, 1997, the provisions of 37 CFR 1.137(b) now provide that where the delay in reply was unintentional, a petition may be filed to revive an abandoned application or a lapsed patent pursuant to 37 CFR 1.137(b). A grantable petition filed under the provisions of 37 CFR 1.137(b) must be accompanied by:

(1) the required reply, unless previously filed. In a nonprovisional application abandoned for failure to prosecute, the required reply may be met by the filing of a continuing application. In a nonprovisional utility or plant application filed on or after June 8, 1995, and abandoned for failure to prosecute, the required reply may also be met by the filing of a request for continuing examination in compliance with § 1.114. In an application or patent, abandoned or lapsed for failure to pay the issue fee or any portion thereof, the required reply must be the payment of the issue fee or any outstanding balance thereof. In an application, abandoned for failure to pay the publication fee, the required reply must include payment of the publication fee.

(2) the petition fee as set forth in 37 CFR 1.17(m);

(3) a statement that the entire delay in filing the required reply from the due date for the reply until the filing of a grantable petition pursuant to 37 CFR 1.137(b) was unintentional. The Commissioner may required additional information where there is a question whether the delay was unintentional; and

(4) any terminal disclaimer (and fee as set forth in 37 CFR 1.20(d)) required pursuant to 37 CFR 1.137(c)).

This application is being referred to the Publishing Division for further processing.

Telephone inquiries concerning this matter may be directed to the undersigned at (571) 272-3231.

Douglas I. Wood
Senior Petitions Attorney
Office of Petitions

UNITED STATES PATENT AND TRADEMARK OFFICE

COMMISSIONER FOR PATENTS
UNITED STATES PATENT AND TRADEMARK OFFICE
P.O. BOX 1450
ALEXANDRIA, VA 22313-1450
www.uspto.gov

LYONDELL CHEMICAL COMPANY
3801 WEST CHESTER PIKE
NEWTOWN SQUARE, PA 19073

COPY MAILED

OCT 0 3 2005

OFFICE OF PETITIONS

In re Patent No. 6,908,972 :
Issued: June 21, 2005 :
Application No. 10/123,774 : DECISION REGARDING PTA
Filed: April 16, 2002 :
Atty. Dkt. No.: 88-1068A :

This decision is in response to the "PETITION FOR PATENT TERM ADJUSTMENT UNDER 37 C.F.R. § 1.705(d)," filed August 5, 2005. This petition is being treated as an application for patent term adjustment under 37 C.F.R. § 1.705(d).

The request for reconsideration of patent term adjustment ("PTA") under 37 C.F.R. § 1.705(d) is **GRANTED TO THE EXTENT INDICATED HEREIN**.

The instant application issued as U.S. Pat. No. 6,908,972 on June 21, 2005 with a PTA of 66 days. The instant application for PTA was timely filed August 5, 2005. Applicants argue that the application should have been accorded a PTA of 281 days.

A review of the application history reveals that an adjustment of 32 days under 37 C.F.R. § 1.702(a)(1) can be attributed to the Office for failure to mail at least one of a notification under 35 U.S.C. 132 or a notice of allowance under 35 U.S.C. 151 not later than fourteen months after the date on which the application was filed. A further adjustment of 281 days can be attributed to the Office in accordance with 37 C.F.R. § 1.702(a)(4) for failure to issue the patent within four months of the date of issue fee payment.

Accordingly, the patent is entitled to an overall adjustment of 313 days as there was no failure by applicants to engage in reasonable efforts to conclude prosecution.

Applicants are advised that the Office is aware that the patent issued June 21, 2005, three years and 66 days after its filing date. *See*, 35 U.S.C. 154(b)(1)(B) and 37 C.F.R. §§ 1.702(b) and 1.703(b).

However, if an application is entitled to an adjustment under 35 U.S.C. 154(b)(1)(B), the entire period during which the application was pending before the Office (except for periods excluded under 35 U.S.C. 154(b)(1)(B)(i)-(iii)), and not just the period beginning three years after the actual filing date of the application, is the period of delay under 35 U.S.C. 154(b)(1)(B) in determining whether periods of delay overlap under 35 U.S.C. 154(b)(2)(A). Thus, any days of delay for Office issuance of the patent more than 3 years after the filing date of the application which overlap with the days of patent term adjustment accorded prior to the issuance of the patent will not result in any additional patent term adjustment. See 35 U.S.C. 154(b)(1)(B), 35 U.S.C. 154(b)(2)(A), and 37 CFR § 1.703(f). *See also, Revision of Patent Term Extension and Patent Term Adjustment Provisions; Final Rule*, 69 Fed. Reg. 21704 (April 22, 2004). In this instance, the period of delay totaling 313 days attributable to grounds specified in § 1.702(a)(1) and (a)(4) overlap with the 66 days attributable to the delay in the issuance of the patent. Thus, the period of adjustment cannot exceed the actual number of days of delay of 313 days.

Accordingly, the patent is entitled to an adjustment of 313 days.

The Office acknowledges receipt of the required application fee of $200.00.

This application file will be forwarded to the Certificate of Corrections branch for issuance of a certificate of correction to indicate that the term of this patent is extended or adjusted under 35 U.S.C. 154(b) by 313 days.

Telephone inquiries specific to this matter may be directed to Petitions Attorney Alesia M. Brown at (571) 272-3202.

Kery Fries

Kery Fries
Senior Legal Advisor
Office of Patent Legal Administration
Office of Deputy Commissioner
for Patent Examination Policy

Enclosure: Draft Certificate of Correction

UNITED STATES PATENT AND TRADEMARK OFFICE

Commissioner for Patents
United States Patent and Trademark Office
P.O. Box 1450
Alexandria, VA 22313-1450
www.uspto.gov

Parsons Hsue & De Runtz LLP
655 Montgomery Street
Suite 1800
San Francisco, CA 94111

MAILED

NOV 05 2004

Technology Center 2100

In re Application of:
Kenneth G. OETZEL
Application No. 10/123,816
Filed: April 15, 2002
For: INTERACTIVE MEDIA AUTHORING WITHOUT ACCESS TO ORIGINAL SOURCE MATERIAL

DECISION ON REQUEST TO WITHDRAW AS ATTORNEY OR AGENT

This is a decision on the Request For Withdrawal As Attorney Under 37 CFR § 1.36 and 0.40(c) filed May 25, 2004.

A Revocation And Substitution Of Power Of Attorney Under 37 CFR § 1.36 was filed on August 16, 2004. The Power Of Attorney revoked all prior Powers Of Attorney and appointed Fitch, Even, Tabin & Flannery as the attorney(s) of record of the instant application. The Power of Attorney of August 16, 2004 was accepted. Accordingly, all communications from the U.S. Patent and Trademark Office to applicant are to be conducted by Fitch, Even, Tabin & Flannery.

For the above stated reasons, the request is **DISMISSED AS MOOT**.

No further communication to you regarding this application will be made.

Vincent N. Trans
Special Program Examiner
Technology Center 2100
Computer Architecture, Software, and
Information Security
571-272-3613

UNITED STATES PATENT AND TRADEMARK OFFICE

COMMISSIONER FOR PATENTS
UNITED STATES PATENT AND TRADEMARK OFFICE
P.O. BOX 1450
ALEXANDRIA, VA 22313-1450
www.uspto.gov

Paper No.

Gerald P. Parsons
c/c PARSONS HSUE & DE RUNTZ LLP
655 Montgomery Street, Suite 1800
San Francisco, CA 94111

MAILED

NOV 0 5 2004

Technology Center 2100

In re Application of:
Kenneth G. Oetzel
Application No. 10/123,816
Filed: April 15, 2002
For: INTERACTIVE MEDIA AUTHORING WITHOUT ACCESS TO ORIGINAL SOURCE MATERIAL

DECISION ON REQUEST TO WITHDRAW AS ATTORNEY OR AGENT

This is a decision on the Request To Withdraw from Representation filed May 25, 2004.

A grantable request to withdraw as attorney of record should indicate thereon the present mailing addresses of the attorney(s) who is/are withdrawing from the record and of the applicant. The request for withdrawal must be signed by every attorney seeking to withdraw or contain a clear indication that one attorney is signing on behalf of another/others. A request to withdraw will not be approved unless at least 30 (thirty) days would remain between the date of approval and the later of the expiration date of a time to file a response or the expiration date of the maximum time period which can be extended under 37 C.F.R. § 1. 136(a). The effective date of withdrawal being the date of decision and not the date of request. See M.P.E.P. § 402.06. 37 C.F.R. § 1.36 further requires that the applicant or patent owner be notified of the withdrawal of the attorney or agent.

The request filed May 25, 2004 meets all the requirements. Accordingly the request is **GRANTED**.

All future communications from the Office will be directed to the below-listed address until otherwise notified by applicant. This correspondence address is provided by the withdrawn attorney(s). Applicant is reminded of the obligation to promptly notify the Patent and Trademark Office (Office) of any change in correspondence address to ensure receipt of all communications from the Office.

James R. Matthews

for Vincent N. Trans
Special Program Examiner
Technology Center 2100
Computer Architecture, Software, and
Information Security
703-305-9750

cc: Thomas F. Lebens
FITCH, EVEN, YABIN AND FLANNERY
1010 Peach Street
San Luis Obispo, CA 93401

UNITED STATES PATENT AND TRADEMARK OFFICE

Commissioner for Patents
United States Patent and Trademark Office
P.O. Box 1450
Alexandria, VA 22313-1450
www.uspto.gov

JUL -2 2004

In re Application of	:	
Gary F. Driscoll et al.	:	
Serial No. 10/123,819	:	DECISION ON PETITION
Filed: April 15, 2002	:	TO WITHDRAW AS ATTORNEY
For: SYSTEM AND METHOD FOR	:	
COMPUTER BASED CREATION	:	
OF TESTS FORMATTED TO	:	
FACILITATE COMPUTER	:	
BASED TESTING	:	

By papers filed on April 28, 2004, counsel has petitioned to withdraw as attorney of record in this application.

The petition is GRANTED.

Applicant is advised that the correspondence address for this application is:

W. Joseph Melnik, Esq.q
Pepper Hamilton, LLP
500 Grant Street, 50th Floor
Pittsburgh, PA 15219-2502

E. Rollins-Cross, Director
Technology Center 3700

Woodcock Washburn, LLP
One Liberty Place, 46th Floor
1650 Market Street
Philadelphia, PA 19103

UNITED STATES PATENT AND TRADEMARK OFFICE

Commissioner for Patents
United States Patent and Trademark Office
P.O. Box 1450
Alexandria, VA 22313-1450
www.uspto.gov

JUL -2 2004

In re Application of	:	
Gary F. Driscoll et al.	:	
Serial No. 10/123,819	:	DECISION ON PETITION
Filed: April 15, 2002	:	TO WITHDRAW AS ATTORNEY
For: SYSTEM AND METHOD FOR	:	
COMPUTER BASED CREATION	:	
OF TESTS FORMATTED TO	:	
FACILITATE COMPUTER	:	
BASED TESTING	:	

By papers filed on April 28, 2004, counsel has petitioned to withdraw as attorney of record in this application.

The petition is GRANTED.

Applicant is advised that the correspondence address for this application is:

W. Joseph Melnik, Esq.q
Pepper Hamilton, LLP
500 Grant Street, 50th Floor
Pittsburgh, PA 15219-2502

E. Rollins-Cross, Director
Technology Center 3700

Woodcock Washburn, LLP
One Liberty Place, 46th Floor
1650 Market Street
Philadelphia, PA 19103

UNITED STATES PATENT AND TRADEMARK OFFICE

Commissioner for Patents
United States Patent and Trademark Office
P.O. Box 1450
Alexandria, VA 22313-1450
www.uspto.gov

JAMES J. RALABATE
5792 MAIN STREET
WILLIAMSVILLE, NY 14221

COPY MAILED

NOV 18 2005

OFFICE OF PETITIONS

In re Application of :
Jeffrey E. Knight :
Application No. 10/123,845 :
Filed: April 16, 2002 :
Attorney Docket No. K0204A :

ON PETITION

This is a decision on the petition under 37 CFR 1.137(b), filed October 31, 2005, to revive the above-identified application.

The petition is **GRANTED**.

This application became abandoned for failure to timely file a proper reply to the non-final Office action mailed January 26, 2004. Accordingly, this application became abandoned on April 27, 2004. A Notice of Abandonment was mailed on August 6, 2004.

The file is being forwarded to Technology Center 3700 for review of the amendment filed October 31, 2005, *in due course*.

Telephone inquiries concerning this matter may be directed to the undersigned at (571) 272-3228.

Edward J. Tannouse
Petitions Attorney
Office of Petitions/Patent
Office of the Deputy Commissioner
for Patent Examination Policy

UNITED STATES PATENT AND TRADEMARK OFFICE

COMMISSIONER FOR PATENTS
UNITED STATES PATENT AND TRADEMARK OFFICE
P.O. BOX 1450
ALEXANDRIA, VA 22313-1450
www.uspto.gov

AFX INC.
47929 FREMONT BLVD
FREMONT, CA 94538

COPY MAILED

DEC 0 8 2005

OFFICE OF PETITIONS

In re Application of
Dany Berube, et al.
Application No. 10/123,849
Filed: April 15, 2002
Attorney Docket No. 23488-09160

ON PETITION

This is a decision on the petition under 37 CFR 1.313(c)(2), filed November 28, 2005 to withdraw the above-identified application from issue after payment of the issue fee.

It does not appear that the petition is signed by an attorney of record. However, in accordance with 37 CFR 1.34(a), the signature of Albert C. Smith appearing on the correspondence shall constitute a representation to the United States Patent and Trademark Office that he is authorized to represent the particular party on whose behalf he acts. However, if Mr. Smith desires to receive correspondence regarding this file, the appropriate power of attorney documentation must be submitted. A courtesy copy of this decision is being mailed to Mr. Smith, the petitioner herein. However, until otherwise instructed, all future correspondence regarding this application file will be directed solely to the above-noted correspondence address of record.

The petition is **GRANTED**.

The above-identified application is withdrawn from issue for consideration of a submission under 37 CFR 1.114 (request for continued examination). See 37 CFR 1.313(c)(2).

Petitioner is advised that the issue fee paid on August 30, 2005 in the above-identified application cannot be refunded. If, however, the above-identified application is again allowed, petitioner may request that it be applied towards the issue fee required by the new Notice of Allowance. [1]

Telephone inquiries relating to this decision should be directed to the undersigned at (571) 272-3204.

[1]The request to apply the issue fee to the new Notice may be satisfied by completing and returning the new Issue Fee Transmittal Form PTOL-85(b), which includes the following language thereon: "Commissioner for Patents is requested to apply the Issue Fee and Publication Fee (if any) or re-apply any previously paid issue fee to the application identified above." Petitioner is advised that, whether a fee is indicated as being due or not, the Issue Fee Transmittal Form **must** be completed and timely submitted to avoid abandonment. Note the language in bold text on the first page of the Notice of Allowance and Fee(s) Due (PTOL-85).

The application is being referred to Technology Center AU 3739 for further processing of the request for continued examination under 37 CFR 1.114 filed December 7, 2005

Sherry D. Brinkley
Petitions Examiner
Office of Petitions
Office of the Deputy Commissioner
for Patent Examination Policy

cc: ALBERT C. SMITH
FENWICK & WEST LLP
801 CALIFORNIA STREET
MOUNTAIN VIEW, CA 94041

UNITED STATES PATENT AND TRADEMARK OFFICE

Commissioner for Patents
United States Patent and Trademark Office
P.O. Box 1450
Alexandria, VA 22313-1450
www.uspto.gov

Date : December 7, 2005

TO : Director, Office of Patent Publication

FROM : Office of the Deputy Commissioner for Patent Examination Policy

SUBJECT : Withdrawal from Issue of

Applicant(s) : Dany Berube, et al.
Application No. : 10/123,849
Filed : April 15, 2002

The above-identified application has been assigned Patent No. 6,974,459 and an issue date of December 13, 2005.

It is hereby directed that this application be withdrawn from issue at the request of the applicant.

Do not refund the issue fee.

The following erratum should be published in the Official Gazette if the above-identified application is published in the OG of December 13, 2005:

> "All reference to Patent No. 6,974,459 to DANY BERUBE, ET AL. CALIFORNIA for DIRECTIONAL MICROWAVE ABLATION INSTRUMENT WITH OFF-SET ENERGY DELIVERY PORTION appearing in the Official Gazette of December 13, 2005, should be deleted since no patent was granted."

Sherry D. Brinkley
Petitions Examiner
Office of Petitions
Office of the Deputy Commissioner
for Patent Examination Policy

cc: Paul Harrison, Crystal Park 3-44l (FAX-306-2737)
Deneise Boyd, Crystal Park 2, Suite 1100 (FAX-308-5413)
Mary Louise McAskill, Crystal Park 3-910 (FAX 305-4372)
Niomi Farmer, Crystal Park 3-9l0 (FAX-305-4372)
Mary E. Johnson (Cookie), P/OCS, CM1-6D07
Duane K.Davis, P/OCS, CM1-6A07
Tamara K. Greene, PK3-910

UNITED STATES PATENT AND TRADEMARK OFFICE

UNITED STATES DEPARTMENT OF COMMERCE
United States Patent and Trademark Office
Address: COMMISSIONER FOR PATENTS
P.O. Box 1450
Alexandria, Virginia 22313-1450
www.uspto.gov

APPLICATION NO.	FILING DATE	FIRST NAMED INVENTOR	ATTORNEY DOCKET NO.	CONFIRMATION NO.
10/123,860	04/16/2002	Joerg C. Tiller	MTV-042.01	6884

25181 7590 05/31/2005

FOLEY HOAG, LLP
PATENT GROUP, WORLD TRADE CENTER WEST
155 SEAPORT BLVD
BOSTON, MA 02110

EXAMINER
REDDICK, MARIE L

ART UNIT	PAPER NUMBER
1713	

DATE MAILED: 05/31/2005

Please find below and/or attached an Office communication concerning this application or proceeding.

UNITED STATES PATENT AND TRADEMARK OFFICE

Commissioner for Patents
United States Patent and Trademark Office
P.O. Box 1450
Alexandria, VA 22313-1450
www.uspto.gov

5/27/05

In re Application of	:	
TILLER, JOERG C, et. al	:	NOTICE OF WITHDRAWAL
Serial No.10/123860	:	FROM ISSUE
Filed: April 16, 2002	:	UNDER 37 CFR 1.313(b)
For: ANTIMICROBIAL POLYMERIC SURFACES	:	

The above-identified application is withdrawn from issue after payment of the issue fee due to reopening of prosecution. See 37 CFR 1.313 (b).

The above-identified application is hereby withdrawn from issue.

The issue fee is refundable upon written request. If, however, the application is again found allowable, the issue fee can be applied toward payment of the issue fee in the amount identified on the new Notice of Allowance and Issue Fee Due upon written request. This request and any balance due must be received on or before the due date noted in the new Notice of Allowance in order to prevent abandonment of the application.

Telephone inquiries should be directed to David Wu at (571) 272-1114.

The above-identified application is being forwarded to the examiner for prompt appropriate action, including notifying applicant of the new status of this application.

JMStone

Jacqueline Stone, Director
Technology Center 1700
Chemical and Materials Engineering

FOLEY HOAG, LLP
PATENT GROUP, WORLD TRADE CENTER WEST
155 SEAPORT BLVD
BOSTON MA 02110

S.N.: 10/123,860

Patent No.: 7,151,139

SPE RESPONSE FOR CERTIFICATE OF CORRECTION

DATE : 9/27/07

Paper No.: ____

TO SPE OF : ART UNIT 1713

SUBJECT : Request for Certificate of Correction on Patent No.: 7151139

A response is requested with respect to the accompanying request for a certificate of correction.

Please complete this form and return with file, within 7 days to:
Palm location **7580, Certificates of Correction Branch – South Tower – 9A22**
If response is for an IFW, **return to employee (named below) via PUBSCofC Team in MADRAS.**
With respect to the change(s) requested, correcting Office and/or Applicant's errors, should the patent read as shown in the certificate of correction (COCIN)? No new matter should be introduced, nor should the scope or meaning of the claims be changed.

Valerie Jackson

Thank You For Your Assistance

Certificates of Correction Branch
Tel. No. 703-308-9390 ext. 114

The request for issuing the above-identified correction(s) is hereby:
Note your decision on the appropriate box.

- ☑ **Approved** — All changes apply.
- ☐ **Approved in Part** — Specify below which changes do not apply.
- ☐ **Denied** — State the reasons for denial below.

Comments:

Correction of Typos - No change in scope or new matter

SPE

1796
Art Unit

UNITED STATES PATENT AND TRADEMARK OFFICE

Commissioner for Patents
United States Patent and Trademark Office
P.O. Box 1450
Alexandria, VA 22313-1450
www.uspto.gov

APP 18 2006

HELLER EHRMAN LLP
275 MIDDLEFIELD ROAD
MENLO PARK CA 94025-3506

In re Application of	:
Goddard et al.	:
Serial No.: 10/123,905	: PETITION DECISION
Filed: April 16, 2002	:
Attorney Docket No.: P3330R1C48	:

This letter is in response to the Petition under 37 CFR 1.181, filed February 13, 2006 requesting (1) that the rejections containing the six new references which have been used by the examiner in the Examiner's Answer be designated as new grounds of rejection; (2) that the examiner provide a corrected Examiner's Answer which identifies the rejections as new grounds of rejection; and (3) that prosecution be reopened because of these new grounds of rejection.

BACKROUND

On February 25, 2005, the examiner issued a Final Office action. Applicants filed a Notice of Appeal on August 29, 2005 and an Appeal Brief on September 27, 2005. The examiner mailed to applicants an Examiner's Answer on December 20, 2005. Applicants filed a Reply Brief on February 13, 2006 along with a request for an Oral Hearing and this petition.

DISCUSSION

In the Examiner's Answer, the examiner relied extensively on six new references in order to support the lack of utility and/or lack of enablement rejections. These new references are:

Saito-Hisaminato et al. ; 2002, DNA Res. 9:35-45 ;
Bustin ; 2002, Trends in Molec. Med. 8(6):269-272.
Anderson et al.; 1997, Electrophoresis 18:533-537.
Kawamoto et al. ; 1996, Mot. Cell. Biol. 174:151-158.
Lian et al.; 2001, Blood 98:513-524 ; and
Fessler et al.; 2002, J. Biol. Chem. 277:31291-31302.

The statutory basis of the rejections 35 USC 101 and 112, first paragraph) in the Examiner's Answer did not change from the FINAL office action mailed to applicants on February 25, 2005. However, it is clear that the examiner used the additional six new references to reinforce these rejections and rebut more thoroughly applicants' arguments. While the applicants did respond to

these new arguments and new references raised by the examiner in the Examiner's Answer in their Reply Brief, they argue that they have been placed at a disadvantage because they are limited in their ability to present substantive evidence of their own in response to these new references and arguments without the reopening of prosecution being granted.

DECISION

For the above reason, the petition under 37 CFR 1.181 requesting (1) that the rejections containing the six new references which have been used by the examiner in the Examiner's Answer be designated as new grounds of rejection; (2) that the examiner provide a corrected Examiner's Answer which identifies the rejections as new grounds of rejection; and (3) that the FINALITY be withdrawn and that prosecution be reopened because of these new grounds of rejection is **GRANTED-IN-PART**.

Applicants' first request that the rejections in the Examiner's Answer be designated "new grounds of rejection" is **GRANTED**.

Applicants' second request has been effectively granted by this Decision on Petition designating the rejections in the Examiner's Answer to be "new grounds of rejection." The further request for the corrected Examiner's Answer is deemed to be moot in view of the Decision on Petition and therefore, **DISMISSED**.

Applicants' third request to have the FINALITY of the application withdrawn and prosecution reopened is **GRANTED** as this is a proper request under the Rules of Prosecution when a new ground of rejection is advanced in an Examiner's Answer. (Alternatively, applicants may rely solely on their Reply Brief and proceed to the Board.)

In view of applicants' expressed limited ability to present new evidence, as noted above, applicants are given TWO MONTHS from the mailing date of this Decision within which to submit any additional arguments, exhibits, affidavits or other evidence which they consider necessary in order to rebut the examiner's new grounds of rejection set forth in the Examiner's Answer. Failure to make any submission will be taken as applicants' agreement to rely solely on the already submitted Reply Brief.

This application is being returned to the examiner for consideration of the Reply Brief which will be treated as a reply to a new "Non-Final" rejection set forth in the Examiner's Answer and further action not inconsistent with this decision.

Applicants have been charged a fee of $130.00 for this petition. However, since there should be no charge for this petition, this $130.00 will be credited to applicants' Deposit Account No. 08-1641.

Should there be any questions about this decision please contact Marianne C. Seidel, by letter addressed to Director, TC 1600, at the address listed above, or by telephone at 571-272-0584 or by facsimile sent to the general Office facsimile number, 703-872-9306.

George C. Elliott

George Elliott
Director, Technology Center 1600

UNITED STATES PATENT AND TRADEMARK OFFICE

COMMISSIONER FOR PATENTS
UNITED STATES PATENT AND TRADEMARK OFFICE
WASHINGTON, D.C. 20231
www.uspto.gov
DIW 12-02

Paper No. 8

KNOBBE, MARTENS, OLSON & BEAR, LLP
2040 MAIN STREET
FOURTEENTH FLOOR
IRVINE CA 92614

COPY MAILED

DEC 0 6 2002

OFFICE OF PETITIONS

In re Application of :
Baker et al. :
Application No. 10/123,907 :
Filed: 16 April, 2002 :
Attorney's Docket No. P3330R1C50 :

ON PETITION

This is a decision on the petition styled under 37 CFR 1.182 and filed on 25 October, 2002, which is treated as a petition under 37 CFR 1.53 requesting that the Notice of Omitted Item(s) in a Nonprovisional Application mailed on 19 August, 2002, be withdrawn.

The petition is granted.

The application was filed on 16 April, 2002. However, on 19 August, 2002, Initial Patent Examination Division mailed a "Notice" stating, *inter alia*, that the application had been accorded a filing date but that Pages 49, 52, 54, 58, 60, 68, 70, 72, 74, and 78 of the specification (description and claims) appeared to have been omitted.

In response, on 25 October, 2002, the present petition was filed. Petitioners argue that Pages 49, 52, 54, 58, 60, 68, 70, 72, 74, and 78 were filed with the other application papers on 16 April, 2002, but were subsequently misplaced in the U.S. Patent and Trademark Office (Office).

Upon a review of the application file, Pages 49, 52, 54, 58, 60, 68, 70, 72, 74, and 78 have been located among the application papers filed on 16 April, 2002.

The petition is **granted**. The "Notice" mailed on 19 August, 2002, is vacated.

The petition fee of $130.00 will be refunded to counsel's deposit account, No. 11-1410 as authorized in the present petition.

The application is being forwarded to the Office of Initial Patent Examination for further processing.

Any inquiries related to this decision should be directed to the undersigned at (703) 308-6918.

Douglas I. Wood
Senior Petitions Attorney
Office of Petitions
Office of the Deputy Commissioner
for Patent Examination Policy

SPE RESPONSE FOR CERTIFICATE OF CORRECTION

Paper No.: _____

DATE : 10-18-06

TO SPE OF : ART UNIT 1646

SUBJECT : Request for Certificate of Correction on Patent No.: 7084258 B2 (10/123907

A response is requested with respect to the accompanying request for a certificate of correction.

Please complete this form and return with file, within 7 days to:
Palm location **7580, Certificates of Correction Branch – South Tower – 9A22**
If response is for an IFW, **return to employee (named below) via PUBSCofC Team in MADRAS.**
With respect to the change(s) requested, correcting Office and/or Applicant's errors, should the patent read as shown in the certificate of correction (COCIN)? No new matter should be introduced, nor should the scope or meaning of the claims be changed.

Eva James

Thank You For Your Assistance

Certificates of Correction Branch
Tel. No. 703-305-8309

The request for issuing the above-identified correction(s) is hereby:
Note your decision on the appropriate box.

- [x] **Approved** — **All** changes apply.
- [ ] **Approved in Part** — Specify below which changes **do not** apply.
- [ ] **Denied** — State the reasons for denial below.

Comments:

Gary B Nickel
SPE

1646
Art Unit

UNITED STATES PATENT AND TRADEMARK OFFICE

Commissioner for Patents
United States Patent and Trademark Office
P.O. Box 1450
Alexandria, VA 22313-1450
www.uspto.gov

JUN 20 2006

HELLER EHRMAN LLP
275 MIDDLEFIELD ROAD
MENLO PARK, CA 94025

In re Application of	:
Audrey Goddard et al	:
Serial No.: 10/123,908	: DECISION ON PETITION
Filed: April 16, 2002	:
Attorney Docket No.: 39780-3330R1C44	:

This letter is in response to the Petition under 37 C.F.R. 1.181, filed April 6, 2006 requesting (1) that the rejections containing the six new references which have been used by the examiner in the Examiner's Answer be designated as new grounds of rejection; (2) that the examiner provide a corrected Examiner's Answer which identifies the rejections as new ground of rejection; and (3) that prosecution be reopened because of these new grounds of rejection.

BACKGROUND

On April 19, 2005, the examiner mailed a Final Office action to applicants, setting a three month shortened statutory period for reply. In the Office action claims 72-79 and 82-84 were rejected under 35 U.S.C. 101 as lacking a substantial credible utility and lack of enablement and under 35 U.S.C. 112, first paragraph, for the same reasons and lack of written description. The affidavits provided were also discussed as non-persuasive.

Applicants filed an argument after final rejection on June 13, 2005, extensively arguing the rejections of record. The examiner in an Advisory Action mailed July 6, 2005, denied entry thereof on the basis that the amendments raised new issues and that the arguments were unpersuasive. Applicants filed a Notice of Appeal on September 19, 2005, and an Appeal Brief on November 14, 2005.

The examiner prepared and mailed to applicants an Examiner's Answer on February 7, 2006. In the Answer the examiner maintained all of the rejections of record

Applicants filed this petition on April 6, 2006, asking that the Examiner's Answer be designated as having a new ground of rejection therein. Applicants filed concurrently a Reply Brief directed to the new grounds of rejection.

DISCUSSION

In the Examiner's Answer the examiner relied extensively on six new references in order to support the lack of utility and lack of enablement rejections set forth in the Final Office action. These new references are:

Saito-Hisaminato et al, 2002, DNA Res. 9:35-45;
Bustin, 2002, TRENDS in Molec. Med. 8(6):269-272;
Anderson et al, 1997, Electrophoresis 18:533-537;
Kawamoto et al, 1996, Mol. Cell. Biol. 174:151-158;
Lian et al; 2001. Blood 98:513-524; and
Fessler et al, 2002, J. Biol. Chem. 277:31291-31302.

The statutory basis of the rejections (35 U.S.C. 101 and 112, first paragraph) in the Examiner's Answer did not change from the FINAL office action mailed to applicants on April 18, 2005. However, it is clear that the examiner used the additional six new references to reinforce these rejections and rebut more thoroughly applicants' arguments. The Answer did not designate the arguments based on these new references as a new ground of rejection. It is also noted that an Answer containing a new ground of rejection must be concurred in and signed by a Group Director. This was not done in this instance.

Applicants have responded to these new arguments and new references raised by the examiner in the Examiner's Answer in their Reply Brief. However, they argue that they have been placed at a disadvantage because they are limited in their ability to present substantive evidence of their own in response to these new references and arguments without reopening of prosecution being granted.

Applicants' points of argument are well taken and are addressed by the decision below.

DECISION

For the above reasons, the petition under 37 C.F.R. 1.181 requesting (1) that the rejections containing the six new references which have been used in the Examiner's Answer be designated as new grounds of rejection; (2) that the Examiner provide a corrected Examiner's Answer which identifies the rejections as new grounds of rejections; and (3) that the FINALITY be withdrawn and that prosecution be reopened because of these new grounds of rejection are **GRANTED-IN-PART.**

Applicants' first request that the rejections in the Examiner's Answer be designated "new grounds of rejection" is **GRANTED**.

Applicants' second request has been effectively granted by this Decision on Petition designating the rejections in the Examiner's Answer to be "new grounds of rejection." The further request for the corrected Examiner's Answer is deemed moot in view of the above Decision and is therefore, **DISMISSED**.

Applicants' third request to have the FINALITY of the application withdrawn and prosecution reopened is **GRANTED** as this is a proper request under the Rules of Prosecution when a new ground of rejection is advanced in an Examiner's Answer. (Alternatively, applicants may rely solely on their Reply Brief and proceed to the Board.)

In view of applicants' expressed limited ability to present new evidence, as noted above, applicants are given TWO MONTHS from the mailing date of this Decision within which to submit any additional arguments, exhibits, affidavits or other evidence which they consider necessary in order to rebut the examiner's new grounds of rejection set forth in the Examiner's Answer. Failure to make any submission will be taken as applicants' agreement to rely solely on the already submitted Reply Brief. No extension of this time period will be permitted.

This application is being returned to the examiner for consideration of the Reply Brief which will be treated as a reply to new "Non-Final" rejections set forth in the Examiner's Answer and further action not inconsistent with this decision.

There is no fee for this petition and the petition fee paid of $130.00 will be credited to applicants' Deposit Account No. 08-1641, as directed.

Should there by any questions regarding this decision, please contact Special Program Examiner, William R. Dixon, Jr. by letter addressed to Director, TC 1600, at the address listed above, or by telephone at 571-272-0519 or by facsimile sent to the general Office facsimile number, 571-273-8300.

John L. LeGuyader
Director, Technology Center 1600

SPE RESPONSE FOR CERTIFICATE OF CORRECTION

Paper No.: X

DATE : April 09, 2008

TO SPE OF : ART UNIT 1646

SUBJECT : Request for Certificate of Correction for Appl. No.: 10/123909 Patent No.: 7193049 B2

A response is requested with respect to a request for a certificate of correction.

With respect to the change(s) requested to correct Office and/or Applicant's errors, should the patent read as shown in the certificate of correction attached herewith or the COCIN document(s), in IFW images for the above-identified patented application? No new matter should be introduced, nor should the scope or meaning of the claims be changed.

If the response is for an IFW, within **7** days, please complete and forward the response, to the employee (named below) via scanning into application images, using document code **COCX**.

DO NOT SENT TO ATTORNEY

If the response is for a paper file wrapper, please complete the response and forward the response with the paper file wrapper, to the employee (named below), within **7** days, to:

Certificates of Correction Branch (CofC)
South Tower - 9A22
Palm Location 7580

You can fax the Directors/SPE response to 571-270-9990

LAMONTE NEWSOME
Certificates of Correction Branch
703-308-9390 ext. 112

Thank You For Your Assistance

The request for issuing the above-identified correction(s) is hereby:
Note your decision on the appropriate box.

- ☑ **Approved** — **All** changes apply.
- ☐ **Approved in Part** — Specify below which changes **do not** apply.
- ☐ **Denied** — State the reasons for denial below.

Comments: _____

_____

_____

_____

_____

[signature] **SPE** 1646 **Art Unit**

UNITED STATES PATENT AND TRADEMARK OFFICE

Commissioner for Patents
United States Patent and Trademark Office
P.O. Box 1450
Alexandria, VA 22313-1450
www.uspto.gov

APR 18 2006

HELLER EHRMAN LLP
275 MIDDLEFIELD ROAD
MENLO PARK CA 94025-3506

In re Application of	:
Goddard et al.	:
Serial No.: 10/123,910	: PETITION DECISION
Filed: April 16, 2002	:
Attorney Docket No.: P330R1C45	:

This letter is in response to the Petition under 37 CFR 1.181, filed March 2, 2006 requesting (1) that the rejections containing the six new references which have been used by the examiner in the Examiner's Answer be designated as new grounds of rejection; (2) that the examiner provide a corrected Examiner's Answer which identifies the rejections as new grounds of rejection; and (3) that prosecution be reopened because of these new grounds of rejection.

BACKROUND

On March 9, 2005, the examiner issued a Final Office action. Applicants filed a Notice of Appeal on August 8, 2005 and an Appeal Brief on October 7, 2005. The examiner mailed to applicants an Examiner's Answer on January 3, 2006. Applicants filed a Reply Brief on March 2, 2006 along with a request for an Oral Hearing and this petition.

DISCUSSION

In the Examiner's Answer, the examiner relied extensively on six new references in order to support the lack of utility and/or lack of enablement rejections. These new references are:

Saito-Hisaminato et al. ; 2002, DNA Res. 9:35-45 ;
Bustin ; 2002, Trends in Molec. Med. 8(6):269-272.
Anderson et al.; 1997, Electrophoresis 18:533-537.
Kawamoto et al. ; 1996, Mot. Cell. Biol. 174:151-158.
Lian et al.; 2001, Blood 98:513-524 ; and
Fessler et al.; 2002, J. Biol. Chem. 277:31291-31302.

The statutory basis of the rejections 35 USC 101 and 112, first paragraph) in the Examiner's Answer did not change from the FINAL office action mailed to applicants on March 9, 2005. However, it is clear that the examiner used the additional six new references to reinforce these rejections and rebut more thoroughly applicants' arguments. While the applicants did respond to

these new arguments and new references raised by the examiner in the Examiner's Answer in their Reply Brief, they argue that they have been placed at a disadvantage because they are limited in their ability to present substantive evidence of their own in response to these new references and arguments without the reopening of prosecution being granted.

DECISION

For the above reason, the petition under 37 CFR 1.181 requesting (1) that the rejections containing the six new references which have been used by the examiner in the Examiner's Answer be designated as new grounds of rejection; (2) that the examiner provide a corrected Examiner's Answer which identifies the rejections as new grounds of rejection; and (3) that the FINALITY be withdrawn and that prosecution be reopened because of these new grounds of rejection is **GRANTED-IN-PART**.

Applicants' first request that the rejections in the Examiner's Answer be designated "new grounds of rejection" is **GRANTED**.

Applicants' second request has been effectively granted by this Decision on Petition designating the rejections in the Examiner's Answer to be "new grounds of rejection." The further request for the corrected Examiner's Answer is deemed to be moot in view of the Decision on Petition and therefore, **DISMISSED**.

Applicants' third request to have the FINALITY of the application withdrawn and prosecution reopened is **GRANTED** as this is a proper request under the Rules of Prosecution when a new ground of rejection is advanced in an Examiner's Answer. (Alternatively, applicants may rely solely on their Reply Brief and proceed to the Board.)

In view of applicants' expressed limited ability to present new evidence, as noted above, applicants are given TWO MONTHS from the mailing date of this Decision within which to submit any additional arguments, exhibits, affidavits or other evidence which they consider necessary in order to rebut the examiner's new grounds of rejection set forth in the Examiner's Answer. Failure to make any submission will be taken as applicants' agreement to rely solely on the already submitted Reply Brief.

This application is being returned to the examiner for consideration of the Reply Brief which will be treated as a reply to a new "Non-Final" rejection set forth in the Examiner's Answer and further action not inconsistent with this decision.

Applicants have been charged a fee of $130.00 for this petition. However, since there should be no charge for this petition, this $130.00 will be credited to applicants' Deposit Account No. 08-1641.

Should there be any questions about this decision please contact Marianne C. Seidel, by letter addressed to Director, TC 1600, at the address listed above, or by telephone at 571-272-0584 or by facsimile sent to the general Office facsimile number, 703-872-9306.

George C. Elliott

George Elliott
Director, Technology Center 1600

UNITED STATES PATENT AND TRADEMARK OFFICE

Commissioner for Patents
United States Patent and Trademark Office
P.O. Box 1450
Alexandria, VA 22313-1450
www.uspto.gov

JUN 20 2006

HELLER EHRMAN LLP
275 MIDDLEFIELD ROAD
MENLO PARK, CA 94025

In re Application of	:
Kevin P. Baker et al	:
Serial No.: 10/123,912	: DECISION ON PETITION
Filed: April 16, 2002	:
Attorney Docket No.: 39780-3330R1C55	:

This letter is in response to the Petition under 37 C.F.R. 1.181, filed April 18, 2006 requesting (1) that the rejections containing the six new references which have been used by the examiner in the Examiner's Answer be designated as new grounds of rejection; (2) that the examiner provide a corrected Examiner's Answer which identifies the rejections as new ground of rejection; and (3) that prosecution be reopened because of these new grounds of rejection.

BACKGROUND

On May 10, 2005, the examiner mailed a Final Office action to applicants, setting a three month shortened statutory period for reply. In the Office action claims 72-79 and 82-84 were rejected under 35 U.S.C. 101 as lacking a substantial credible utility and lack of enablement and under 35 U.S.C. 112, first paragraph, for the same reasons and lack of written description and under 35 U.S.C. 112, second paragraph, as indefinite. The affidavits provided were also discussed as non-persuasive.

Applicants filed an argument after final rejection on July 11, 2005, extensively arguing the rejections of record. The examiner in an Advisory Action mailed August 30, 2005, denied entry thereof on the basis that the amendments raised new issues and that the arguments were unpersuasive. Applicants filed a Notice of Appeal on October 11, 2005, and an Appeal Brief and new amendment on December 6, 2005.

The examiner entered the amendment and then prepared and mailed to applicants an Examiner's Answer on February 23, 2006. In the Answer the examiner maintained all of the rejections of record

Applicants filed this petition on April 18, 2006, asking that the Examiner's Answer be designated as having a new ground of rejection therein. Applicants filed concurrently a Reply Brief directed to the new grounds of rejection.

DISCUSSION

In the Examiner's Answer the examiner relied extensively on six new references in order to support the lack of utility and lack of enablement rejections set forth in the Final Office action. These new references are:

Saito-Hisaminato et al, 2002, DNA Res. 9:35-45;
Bustin, 2002, TRENDS in Molec. Med. 8(6):269-272;
Anderson et al, 1997, Electrophoresis 18:533-537;
Kawamoto et al, 1996, Mol. Cell. Biol. 174:151-158;
Lian et al, 2001. Blood 98:513-524; and
Fessler et al, 2002, J. Biol. Chem. 277:31291-31302.

The statutory basis of the rejections (35 U.S.C. 101 and 112, first paragraph) in the Examiner's Answer did not change from the FINAL office action mailed to applicants on April 18, 2005. However, it is clear that the examiner used the additional six new references to reinforce these rejections and rebut more thoroughly applicants' arguments. The Answer did not designate the arguments based on these new references as a new ground of rejection. It is also noted that an Answer containing a new ground of rejection must be concurred in and signed by a Group Director. This was not done in this instance.

Applicants have responded to these new arguments and new references raised by the examiner in the Examiner's Answer in their Reply Brief. However, they argue that they have been placed at a disadvantage because they are limited in their ability to present substantive evidence of their own in response to these new references and arguments without reopening of prosecution being granted.

Applicants' points of argument are well taken and are addressed by the decision below.

DECISION

For the above reasons, the petition under 37 C.F.R. 1.181 requesting (1) that the rejections containing the six new references which have been used in the Examiner's Answer be designated as new grounds of rejection; (2) that the Examiner provide a corrected Examiner's Answer which identifies the rejections as new grounds of rejections; and (3) that the FINALITY be withdrawn and that prosecution be reopened because of these new grounds of rejection are **GRANTED-IN-PART.**

Applicants' first request that the rejections in the Examiner's Answer be designated "new grounds of rejection" is **GRANTED**.

Applicants' second request has been effectively granted by this Decision on Petition designating the rejections in the Examiner's Answer to be "new grounds of rejection." The further request for the corrected Examiner's Answer is deemed moot in view of the above Decision and is therefore, **DISMISSED**.

Applicants' third request to have the FINALITY of the application withdrawn and prosecution reopened is **GRANTED** as this is a proper request under the Rules of Prosecution when a new ground of rejection is advanced in an Examiner's Answer. (Alternatively, applicants may rely solely on their Reply Brief and proceed to the Board.)

In view of applicants' expressed limited ability to present new evidence, as noted above, applicants are given TWO MONTHS from the mailing date of this Decision within which to submit any additional arguments, exhibits, affidavits or other evidence which they consider necessary in order to rebut the examiner's new grounds of rejection set forth in the Examiner's Answer. Failure to make any submission will be taken as applicants' agreement to rely solely on the already submitted Reply Brief. No extension of this time period will be permitted.

This application is being returned to the examiner for consideration of the Reply Brief which will be treated as a reply to new "Non-Final" rejections set forth in the Examiner's Answer and further action not inconsistent with this decision.

There is no fee for this petition and the petition fee paid of $130.00 will be credited to applicants' Deposit Account No. 08-1641, as directed.

Should there by any questions regarding this decision, please contact Special Program Examiner, William R. Dixon, Jr. by letter addressed to Director, TC 1600, at the address listed above, or by telephone at 571-272-0519 or by facsimile sent to the general Office facsimile number, 571-273-8300.

John L. LeGuyader
Director, Technology Center 1600

UNITED STATES
PATENT AND
TRADEMARK OFFICE

Commissioner for Patents
Washington, DC 20231
www.uspto.gov

6/30/03

Fitch Even Tabin and Flannery
Suite 1600
120 South LaSalle Street
Chicago IL 60603

Dear Applicant:

The Box PGPub replacement drawings for application number 10/123,923 received on 5/16/03 by the U. S. Patent and Trademark Office will be included for patent publication.

Telephone inquiries should be directed to Customer Service, Office of Initial Patent Examination, at 703-308-1202.

UNITED STATES
PATENT AND
TRADEMARK OFFICE

Commissioner for Patents
Washington, DC 20231
www.uspto.gov

Signature of Reviewer, Office of Initial Patent Examination

UNITED STATES PATENT AND TRADEMARK OFFICE

Commissioner for Patents
United States Patent and Trademark Office
P.O. Box 1450
Alexandria, VA 22313-1450
www.uspto.gov

WESTERMAN, HATTORI, DANIELS & ADRIAN, LLP
1250 CONNECTICUT AVENUE, NW
SUITE 700
WASHINGTON DC 20036

COPY MAILED

JAN 1 0 2008

OFFICE OF PETITIONS

In re Patent No. 7,193,670	:	
Issued: March 20, 2007	:	
Application No. 10/123,936	:	ON PETITION
Filed: April 17, 2002	:	
Attorney Docket No. 063513	:	

This is a decision on the petition under 37 CFR 1.182, filed December 6, 2007, requesting issuance of a duplicate Letters Patent for the above-identified application.

The petition is **GRANTED**.

The Publishing Division is directed to issue a duplicate Letters Patent.

Any questions concerning this matter may be directed to the undersigned at (571) 272-3206. Any questions concerning issuance of the duplicate Letters Patent should be directed to Krystal Paige at (703) 308-9250.

A copy of this decision is being forwarded to Publishing Division for issuance of a duplicate Letters Patent.

Liana Walsh
Petitions Examiner
Office of Petitions

cc: Krystal Paige, P/OPPD, South Tower 8C41 (FAX 571-273-9756)

#10
DW

UNITED STATES PATENT AND TRADEMARK OFFICE

JUN - 7 2004

COMMISSIONER FOR PATENTS
UNITED STATES PATENT AND TRADEMARK OFFICE
P.O. BOX 1450
ALEXANDRIA, VA 22313-1450
www.uspto.gov

FAY, SHARPE, FAGAN, MINNICH & McKEE, LLP
Suite 700
1100 Superior Avenue
Cleveland, OH 44114-2518

MAILED

JUN - 7 2004

OFFICE OF THE DIRECTOR
TC 3600

In re Application of
James D. Young
Application No. 10/123,940
Filed: April 16, 2002
For: ROLLER CHAIN SPROCKET WITH SYMMETRIC CUSHION RINGS

DECISION ON PETITION TO WITHDRAW THE HOLDING OF ABANDONMENT

This is a decision on applicant's petition to withdrawal the holding of abandonment filed on February 27, 2004.

The petition is **GRANTED** in view of the following evidence of timely filing :

☐ Postcard receipt being dated_____.

☒ USPTO return facsimile receipt dated July 30, 2003 which identifies the application by serial number and the type of Response that was filed on that date.

☒ Certificate of Mailing/Transmission signed on July 30, 2003 . and supported by a statement under 37 C.F.R. 1.8(b)(3).

☐ Hand Delivery Receipt of the specific documents submitted dated _____.

☐ Certificate of Transmission of CPA under 37 C.F.R. 1.6 filed on _____.

☐ Express Mail Receipt under 37 C.F.R. 1.10 dated _____.

This application is being forwarded to the Supervisory Legal Instruments Examiner for entry of the response filed with the petition, then to the examiner for prompt action on the response.

RAR/mjz: 5/17/04

Randolph A. Reese
Special Programs Examiner
Group 3600

UNITED STATES PATENT AND TRADEMARK OFFICE

Commissioner for Patents
United States Patent and Trademark Office
P.O. Box 1450
Alexandria, VA 22313-1450
www.uspto.gov

PACESETTER INC
15900 VALLEY VIEW COURT
SYLMAR CA 91392-9221

COPY MAILED

AUG 21 2006

OFFICE OF PETITIONS

In re Application of	:	
Silvian, et al.	:	
Application No. 10/123,944	:	DECISION ON
Filed: April 16, 2002	:	PETITION
Attorney Docket No. A02P1032	:	

This is in response to the petition to revive under 37 CFR 1.137(b), filed January 20, 2006.

The petition under 37 CFR 1.137(b) is **GRANTED**.

The above-identified application became abandoned for failure to timely submit a replacement drawing Figure 1 as required by the Notice of Allowability mailed on August 25, 2005. This notice set a non extendable period for reply of three months. No corrected drawings having been received, the above-identified application became abandoned on November 26, 2005. A Notice of Abandonment was mailed on January 9, 2006.

With the instant petition, petition paid the petition fee, submitted a replacement drawing Figure 1, and made the proper statement of unintentional delay.

The application file is being forwarded to Group Art Unit 3762 for consideration of the replacement drawing figure.

Telephone inquiries related to this decision should be directed to the undersigned at 571-272-3207.

Cliff Congo
Petitions Attorney
Office of Petitions

UNITED STATES PATENT AND TRADEMARK OFFICE

UNITED STATES DEPARTMENT OF COMMERCE
United States Patent and Trademark Office
Address: COMMISSIONER FOR PATENTS
P.O. Box 1450
Alexandria, Virginia 22313-1450
www.uspto.gov

HUNTON & WILLIAMS LLP
INTELLECTUAL PROPERTY DEPARTMENT
1900 K STREET, N.W.
SUITE 1200
WASHINGTON, DC 20006-1109

Mail Date: 04/21/2010

Applicant	: Joseph P. Blauvelt	: DECISION ON REQUEST FOR
Patent Number	: 7596526	: RECALCULATION of PATENT
Issue Date	: 09/29/2009	: TERM ADJUSTMENT IN VIEW
Appliction No	: 10/123,946	: OF WYETH AND NOTICE OF INTENT TO
Filed	: 04/16/2002	: ISSUE CERTIFICATE OF CORRECTION
		:

The Request for Recalculation is **GRANTED** to the extent indicated.

The patent term adjustment has been determined to be **1485** days. The USPTO will *sua sponte* issue a certificate of correction reflecting the amount of PTA days determined by the recalculation.

Prior to the issuance of the certificate of correction, the USPTO will afford patentee an opportunity to be heard and request reconsideration. Accordingly, patentee has **one month or thirty (30) days**, whichever is longer, to file a request for reconsideration of this patent term adjustment calculation. See 35 U.S.C. 154(b)(3)(B)(ii) and 37 CFR 1.322(a)(4). No extensions of time will be granted under 37 CFR 1.136.

Patentee should use document code PET.OP if electronically filing a request for reconsideration of this patent term adjustment calculation. The patentee must also include the information required by 37 CFR 1.705(b)(2) and the fee required by 37 CFR 1.18(e). If patentee does not file a timely request for reconsideration of this patent term adjustment calculation including the information required by 37 CFR 1.705(b)(2) and the fee required by 37 CFR 1.18(e), the USPTO will issue a certificate of correction reflecting the PTA determination noted above.

Patentee should be aware that in order to preserve the right to review in the United States District Court for the District of Columbia of the USPTO patent term adjustment determination, patentee must ensure that he or she also take the steps required under 35 U.S.C. 154(b)(4)(A) in a timely manner. Nothing in the request for recalculation should be construed as providing an alternative time frame for commencing a civil action under 35 U.S.C. 154(b)(4)(A).

Any questions concerning this decision should be directed to the Office of Patent Legal Administration at 571-272-7702.

UNITED STATES PATENT AND TRADEMARK OFFICE

UNITED STATES DEPARTMENT OF COMMERCE
United States Patent and Trademark Office
Address: COMMISSIONER FOR PATENTS
P.O. Box 1450
Alexandria, Virginia 22313-1450
www.uspto.gov

HUNTON & WILLIAMS LLP
INTELLECTUAL PROPERTY DEPARTMENT
1900 K STREET, N.W.
SUITE 1200
WASHINGTON, DC 20006-1109

Mail Date: 05/18/2010

Applicant : Joseph P. Blauvelt
Patent Number : 7596526
Issue Date : 09/29/2009
Application No : 10/123,946
Filed : 04/16/2002

: NOTICE CONCERNING IMPROPER
: CALCULATION OF PATENT TERM
: ADJUSTMENT BASED UPON USPTO
: IMPROPERLY MEASURING REDUCTION
: PERIOD UNDER 37 CFR 1.704(c)(10).

The United States Patent and Trademark Office (USPTO) discovered that in processing the recent recalculation decisions mailed in response to patentee's filed Request for Recalculation of Patent Term Adjustment in view of Wyeth, the USPTO improperly measured the reduction period for reductions under 37 CFR 1.704(c)(10). Pursuant to 37 CFR 1.704(c)(10), patentee's reduction begins on the date of filing the amendment under 37 CFR 1.312 ("1.312 amendment") or other related paper and ends on the date that the Office mails a response to the filing of the 1.312 amendment or other paper. It has been discovered that during the recalculation, the calculation failed to the limit the reduction to the mail date of the response to the 1.312 amendment or other paper. Accordingly, patentee's reductions were greater than warranted.

This notice **VACATES** the previous GRANTED request for recalculation and provides patentee with a revised GRANTED recalculation.

The patent term adjustment has been determined to be **1524** days. The USPTO will *sua sponte* issue a certificate of correction reflecting the amount of patent term adjustment (PTA) days determined by the recalculation.

Prior to the issuance of the certificate of correction, the USPTO will afford patentee an opportunity to be heard and request reconsideration. Accordingly, patentee has **one month or thirty (30) days** from the mail date of this notice, whichever is longer, to file a request for reconsideration of this PTA calculation. See 35 U.S.C. § 154(b)(3)(B)(ii) and 37 CFR 1.322(a)(4).

Patentee should use document code PET.OP if electronically filing a request for reconsideration of this PTA calculation. The patentee must also include the information required by 37 CFR 1.705(b)(2), and the fee required by 37 CFR 1.18(e). If patentee does not file a timely request for reconsideration of this PTA calculation, including the information required by 37 CFR 1.705(b)(2) and the fee required by 37 CFR 1.18(e), the USPTO will issue a certificate of correction reflecting the PTA determination noted above.

Patentee should be aware that in order to preserve the right of review of the USPTO's PTA determination in the United States District Court for the District of Columbia, patentee must ensure that the steps required under 35 U.S.C. § 154 (b)(4) are taken in a timely manner. Nothing in the request for recalculation should be construed as providing an alternative time frame for commencing a civil action under 35 U.S.C. § 154(b)(4).

UNITED STATES PATENT AND TRADEMARK OFFICE

COMMISSIONER FOR PATENTS
UNITED STATES PATENT AND TRADEMARK OFFICE
WASHINGTON, DC 20231
www.uspto.gov

Paper No. 5
MAIL

DEC 3 0 2003

DIRECTOR OFFICE
TECHNOLOGY CENTER 2600

ZIOLKOWSKI PATENT SOLUTIONS GROUP, LLC (ZPS)
14135 NORTH CEDARBURG ROAD
MEQUON, WI 53097

In re Application of :
ROTH, DAVID A. :
Application No. 10/123,949 :
Filed: April 16, 2002 :
For: **SYSTEM AND METHOD FOR MODIFYING BROADCAST SIGNALS IN CLOSED CIRCUIT SYSTEMS** :

DECISION ON REQUEST TO WITHDRAW AS ATTORNEY

This is a decision on the request to withdraw as attorney/agent of record filed on November 25, 2002.

A grantable request to withdraw as attorney/agent of record must do the following:
(1) indicate the present mailing address of the attorney(s)/agent(s) who seek(s) to withdraw, and
(2) be signed by each attorney/agent seeking to withdraw or clearly be signed on their behalf, and
(3) be *approved* at least thirty (30) days prior to the maximum extendable period for response to any outstanding Office Action, and
(4) indicate the address to which future correspondence should be mailed.

Petitioner has met all of the above.

Accordingly, the request is **GRANTED**.

All attorneys/agents associated with Customer No. 26,629 are granted the request for withdraw as attorney/agent.

All future communications from the Office will be directed to the address listed below until otherwise notified by applicant. Applicant is reminded of the obligation to promptly notify the Patent and Trademark Office of any change in correspondence address to ensure receipt of all communications from the Office.

Kenneth Wieder
Special Program Examiner
Technology Center 2600
Communications
(703) 305-4710

cc: DAVID A. ROTH
4990 LAKE DRIVE
WEST BEND, WI 53095

UNITED STATES PATENT AND TRADEMARK OFFICE

Commissioner for Patents
United States Patent and Trademark Office
P.O. Box 1450
Alexandria, VA 22313-1450
www.uspto.gov

MAILED

DEC 08 2009

OFFICE OF PETITIONS

FISH & RICHARDSON PC
P.O. BOX 1022
MINNEAPOLIS MN 55440-1022

In re Patent No. 7,178,149	:	
Issue Date: February 13, 2007	:	
Application No. 10/123,960	:	NOTICE
Filed: April 17, 2002	:	
Attorney Docket No. 11333-015001	:	

This is a notice regarding your request for acceptance of a fee deficiency submission under 37 CFR 1.28 filed September 28, 2009. On September 1, 1998, the Court of Appeals for the Federal Circuit held that 37 CFR 1.28(c) is the sole provision governing the time for correction of the erroneous payment of the issue fee as a small entity. **See DH Technology v. Synergystex International, Inc. 154 F.3d 1333, 47 USPQ2d 1865 (Fed. Cir. Sept. 1, 1998).**

The Office no longer investigates or rejects original or reissue applications under 37 CFR 1.56. **1098 Off. Gaz. Pat. Office 502 (January 3, 1989)**. Therefore, nothing in this Notice is intended to imply that an investigation was done.

Your fee deficiency submission under 37 CFR 1.28 is hereby accepted. The petition is **GRANTED**.

This application is no longer entitled to small entity status. Accordingly, all future fees paid in this application must be paid at the large entity rate.

This file is being forwarded to Files Repository.

Telephone inquiries related to this decision should be directed to the Kimberly Inabinet at (571) 272-4618.

Carl Friedman
Petitions Examiner
Office of Petitions

UNITED STATES PATENT AND TRADEMARK OFFICE

COMMISSIONER FOR PATENTS
UNITED STATES PATENT AND TRADEMARK OFFICE
P.O. BOX 1450
ALEXANDRIA, VA 22313-1450
www.uspto.gov

PETERS, VERNY, JONES & SCHMITT
SUITE 6
385 SHERMAN AVENUE
PALO ALTO, CA 94306-1827

COPY MAILED

APR 2 2 2004

OFFICE OF PETITIONS

In re Application of	:	
Joseph Y. Sahyoun et al	:	
Application No. 10/123,963	:	ON PETITION
Filed: April 16, 2002	:	
Attorney Docket No. 3607.10-1	:	

This is a decision on the petition under 37 CFR 1.78(a)(6), filed February 23, 2004, to accept an unintentionally delayed claim under 35 U.S.C.§ 119(e) for the benefit of prior-filed provisional Application No. 60/284,260, filed April 17, 2001.

The petition is **DISMISSED AS MOOT**.

A petition under 37 CFR 1.78(a)(6) is only applicable to those applications filed on or after November 29, 2000.

Petitioner has submitted on February 23, 2004, an amendment to the first sentence of the specification following the title to include a reference to prior-filed provisional Application No. 60/284,260, filed April 17, 2001.

The instant pending nonprovisional application was filed on April 16, 2002, and was pending at the time of filing of the instant petition. While a reference to the prior-filed provisional application was not included in an ADS or in the first sentence of the specification following the title, reference nevertheless was made in the transmittal letter filed with the above-identified application.

The current procedure where a claim for priority under 37 CFR 1.78(a)(6) is not included in the first sentence of the specification or in an ADS but does appear either in the oath or declaration or a transmittal letter filed with the application and the Office notes the claim for priority, no petition will be required to accept a late claim for priority. This is because the application would have been scheduled for publication on the basis of the information concerning the claim submitted elsewhere in the application within the time period set forth in 37 CFR 1.78(a)(5). However, on the other hand, if the USPTO does not note the claim for priority to the provisional application in the oath or declaration or transmittal letter submitted with the

application, a petition will be required to accept a late claim for priority under 37 CFR 1.78(a)(6).[1] In the instant case, the Office noted the claim for priority of provisional Application No. 60/284,260 in the declaration filed with the application, as shown by its inclusion on the filing receipt.

In view of the above, the $1330 petition fee submitted is unnecessary and will be refunded to petitioner's deposit account in due course.

Any questions concerning this decision on petition may be directed to Karen Creasy at (703)305-8859. All other inquiries concerning either the examination procedures or status of the application should be directed to the Technology Center.

The examiner of Technology Center AU 2837 will consider the claim under 35 U.S.C. § 119(e) and 37 CFR 1.78(a)(6) for the benefit of prior-filed provisional Application No. 60/284,260, filed on April 17, 2001.

Karen Creasy

Karen Creasy
Petitions Examiner
Office of Petitions
Office of the Deputy Commissioner
for Patent Examination Policy

[1] Note 66 Federal Register 67087 at 67089 (Dec. 28, 2001), effective December 28, 2001.

UNITED STATES PATENT AND TRADEMARK OFFICE

COMMISSIONER FOR PATENTS
UNITED STATES PATENT AND TRADEMARK OFFICE
P.O. BOX 1450
ALEXANDRIA, VA 22313-1450
www.uspto.gov

PETERS, VERNY, JONES & SCHMITT
SUITE 6
385 SHERMAN AVENUE
PALO ALTO, CA 94306-1827

COPY MAILED

APR 22 2004

OFFICE OF PETITIONS

In re Application of	:	
Joseph Y. Sahyoun et al	:	
Application No. 10/123,963	:	ON PETITION
Filed: April 16, 2002	:	
Attorney Docket No. 3607.10-1	:	

This is a decision on the petition under 37 CFR 1.78(a)(6), filed February 23, 2004, to accept an unintentionally delayed claim under 35 U.S.C.§ 119(e) for the benefit of prior-filed provisional Application No. 60/284,260, filed April 17, 2001.

The petition is **DISMISSED AS MOOT**.

A petition under 37 CFR 1.78(a)(6) is only applicable to those applications filed on or after November 29, 2000.

Petitioner has submitted on February 23, 2004, an amendment to the first sentence of the specification following the title to include a reference to prior-filed provisional Application No. 60/284,260, filed April 17, 2001.

The instant pending nonprovisional application was filed on April 16, 2002, and was pending at the time of filing of the instant petition. While a reference to the prior-filed provisional application was not included in an ADS or in the first sentence of the specification following the title, reference nevertheless was made in the transmittal letter filed with the above-identified application.

The current procedure where a claim for priority under 37 CFR 1.78(a)(6) is not included in the first sentence of the specification or in an ADS but does appear either in the oath or declaration or a transmittal letter filed with the application and the Office notes the claim for priority, no petition will be required to accept a late claim for priority. This is because the application would have been scheduled for publication on the basis of the information concerning the claim submitted elsewhere in the application within the time period set forth in 37 CFR 1.78(a)(5). However, on the other hand, if the USPTO does not note the claim for priority to the provisional application in the oath or declaration or transmittal letter submitted with the

application, a petition will be required to accept a late claim for priority under 37 CFR 1.78(a)(6).[1] In the instant case, the Office noted the claim for priority of provisional Application No. 60/284,260 in the declaration filed with the application, as shown by its inclusion on the filing receipt.

In view of the above, the $1330 petition fee submitted is unnecessary and will be refunded to petitioner's deposit account in due course.

Any questions concerning this decision on petition may be directed to Karen Creasy at (703)305-8859. All other inquiries concerning either the examination procedures or status of the application should be directed to the Technology Center.

The examiner of Technology Center AU 2837 will consider the claim under 35 U.S.C. § 119(e) and 37 CFR 1.78(a)(6) for the benefit of prior-filed provisional Application No. 60/284,260, filed on April 17, 2001.

Karen Creasy

Karen Creasy
Petitions Examiner
Office of Petitions
Office of the Deputy Commissioner
for Patent Examination Policy

[1] Note 66 Federal Register 67087 at 67089 (Dec. 28, 2001), effective December 28, 2001.

UNITED STATES PATENT AND TRADEMARK OFFICE

Commissioner for Patents
United States Patent and Trademark Office
P.O. Box 1450
Alexandria, VA 22313-1450
www.uspto.gov

LOCKHEED MARTIN CORPORATION
MS U2F26
3333 PILOT KNOB ROAD
EAGAN, MN 55121-2034

COPY MAILED
JUN 23 2004
OFFICE OF PETITIONS

In re Application of	:	
Trevor J. McCollough et al	:	
Application No. 10/123,970	:	ON PETITION
Filed: April 16, 2002	:	
Attorney Docket No. EA-00208	:	

This is a decision on the petition under 37 CFR 1.137(b), filed June 1, 2004, to revive the above-identified application.

The petition is **GRANTED**.

The above-identified application became abandoned for failure to submit the issue fee/publication fee in a timely manner in reply to the Notice of Allowance mailed February 18, 2004, which set a statutory period for reply of three (3) months. Accordingly, the above-identified application became abandoned on May 19, 2004.

Telephone inquiries concerning this decision should be directed to Wan Laymon at (703) 306-5685.

The matter is being referred to Publishing Division.

Wan Laymon
Petitions Examiner
Office of Petitions
Office of the Deputy Commissioner
for Patent Examination Policy

UNITED STATES PATENT AND TRADEMARK OFFICE

COMMISSIONER FOR PATENTS
UNITED STATES PATENT AND TRADEMARK OFFICE
P.O. BOX 1450
ALEXANDRIA, VA 22313-1450
www.uspto.gov

Paper No. 15

Vedder, Price, Kaufman & Kammholz, P.C.
222 N. LaSalle Street
Chicago, IL 60601

COPY MAILED

JAN 14 2004

OFFICE OF PETITIONS

In re Application of
Oleg Drapkin, et. al.
Application No. 10/123,983
Filed: April 16, 2002
Attorney Docket No. 00100.02.0018

ON PETITION

This is a decision on the petition under 37 CFR 1.137(b), filed December 15, 2003, to revive the above-identified application.

The above-identified application became abandoned for failure to reply within the meaning of 37 CFR 1.113 in a timely manner to the final Office action mailed April 8, 2003, which set a shortened statutory period for reply of three (3) months. No extensions of time under the provisions of 37 CFR 1.136(a) were obtained. Accordingly, the above-identified application became abandoned after midnight July 8, 2003.

In response to the final Office action, petitioner submitted with the instant petition $1,330 for the petition to revive fee, $770 for the Request for Continued Examination (RCE) fee, $86 for an independent claim fee, $950 for a three (3) months extension of time, and an amendment.

An extension of time under 37 CFR 1.136 must be filed prior to the expiration of the maximum extendable period for reply. See In re Application of S., 8 USPQ2d 1630, 1631 (Comm'r Pats. 1988). Accordingly, since the $950 extension of time submitted with the petition on December 15, 2003 was subsequent to the maximum extendable period for reply, this fee is unnecessary and will be credited to petitioner's deposit account.

Since the requirements for a grantable petition have been met, the petition is **GRANTED**.

The application file is being forwarded to Technology Center 2800, for processing the Request for Continued Examination under 37 CFR 1.114 filed with the instant petition.

Telephone inquiries concerning this decision should be directed to Andrea Smith at (703) 308-6711.

Andrea Smith
Petitions Examiner
Office of Petitions
Office of the Deputy Commissioner
for Patent Examination Policy

UNITED STATES PATENT AND TRADEMARK OFFICE

COMMISSIONER FOR PATENTS
UNITED STATES PATENT AND TRADEMARK OFFICE
P.O. BOX 1450
ALEXANDRIA, VA 22313-1450
www.uspto.gov

Paper No. 8

KRIS FREDRICK
HONEYWELL INC., LAW DEPARTMENT
MN65-3500
3660 TECHNOLOGY DRIVE
MINNEAPOLIS, MN 55418

COPY MAILED

MAR 2 9 2004

OFFICE OF PETITIONS

In re Application of :
Faltesek et al. :
Application No. 10/123,985 :
Filed: April 17, 2002 :
Attorney Docket No. H0002520 (1100.1156101) :

ON PETITION

This decision concerns the March 12, 2004 petition under 37 CFR 1.137(b).

The petition is **GRANTED.**

The application became abandoned on July 18, 2002 for failure to timely submit substitute drawings as required by the May 17, 2002 "Notice to File Corrected Application Papers."

The instant petition encloses a set of substitute drawings, which have been approved by the draftsperson, and the $1,330 petition fee; and states that the entire delay in filing these drawings was unintentional. The petition is thus granted. The application is now complete.

In addition, the practitioner signing the instant petition is one of the attorneys-of-record, but uses a correspondence address different from that in the USPTO record for this application. While a courtesy copy of this decision is being sent to the address indicated in the petition, all future correspondence on this application will be mailed to the current address-of-record unless the USPTO is properly instructed otherwise.

The file is being forwarded to Technology Center 2100 for examination in due course.

Telephone inquiries should be directed to the undersigned at (703) 308-0763.

RC Tang
Petitions Attorney
Office of Petitions

cc: John G. Shudy, Jr., Esq.
Crompton, Seager & Tufte
1221 Nicollet Ave., Suite 800
Minneapolis, MN55403

UNITED STATES
PATENT AND
TRADEMARK OFFICE

Commissioner for Patents
Washington, DC 20231
www.uspto.gov

7/11/03

Fish and Neave
50th Floor
1251 Avenue of the Americas
New York NY 10020-1105

Dear Applicant:

The Box PGPub replacement drawings for application number 10/123,990 received on 6/16/03 by the U. S. Patent and Trademark Office will be included for patent publication.

Telephone inquiries should be directed to Customer Service, Office of Initial Patent Examination, at 703-308-1202.

UNITED STATES
PATENT AND
TRADEMARK OFFICE

Commissioner for Patents
Washington, DC 20231
www.uspto.gov

Signature of Reviewer, Office of Initial Patent Examination

UNITED STATES PATENT AND TRADEMARK OFFICE

Commissioner for Patents
United States Patent and Trademark Office
P. O. Box 1450
Alexandria, VA 22313-1450
www.uspto.gov

Paper No. 10

Thomas M. Isaacson
AT & T Corporation
P.O. Box 4110
Middletown, NJ 07748

COPY MAILED

MAY 23 2003

OFFICE OF PETITIONS

In re Application of
Adriana DUMITRAS et al.
Application No. 10/123,993
Filed: April 16, 2002
Attorney Docket No. 2001-0527

DECISION GRANTING PETITION
UNDER 37 CFR 1.137(f)

This is a decision on the petition, filed May 14, 2003, to revive the instant nonprovisional application under the unintentional provisions of 37 CFR 1.137(f).

The petition is **GRANTED**.

Petitioner states that the instant nonprovisional application is the subject of an application filed in a foreign country on January 23, 2003. However, the U.S. Patent and Trademark Office was unintentionally not notified of this filing within 45 days subsequent to the filing of the subject application in a foreign country.

In view of the above, this application became abandoned pursuant to 35 U.S.C. § 122(b)(2)(B)(iii) and 37 CFR 1.213(c) for failure to timely notify the Office of the filing of an application in a foreign country, or under a multilateral international agreement, that requires publication of applications 18 months after filing.

A petition under 37 CFR 1.137(f) must be accompanied by:

(1) the reply which is met by the notification of such filing in a foreign country or under a multinational treaty;

(2) the petition fee as set forth in 37 CFR 1.17(m); and

(3) a statement that the entire delay in filing the required reply from the due date of the reply until

the filing of a grantable petition was unintentional.

The instant petition has been found to be in compliance with 37 CFR 1.137(f). Accordingly, the failure to timely notify the Office of a foreign or international filing within 45 days after the date of filing of such foreign or international application as provided by 35 U.S.C. § 122(b)(2)(B)(iii) and 37 CFR 1.213(c) is accepted as having been unintentionally delayed.

The previous Request and Certification under 35 U.S.C. § 122(b)(2)(B)(i) has been rescinded. A Notice Regarding Rescission of Nonpublication Request which sets forth the projected publication date of August 28, 2003 was mailed on May 22, 2003.

Any inquiries concerning this decision may be directed to B. Dayoan at (703) 308-3865 or, in her absence, to the undersigned at (703) 305-8680.

This application is being forwarded to Technology Center Art Unit 2614 for examination in due course.

Frances Hicks

Frances Hicks
Petitions Examiner
Office of Petitions
Office of the Deputy Commissioner
for Patent Examination Policy

UNITED STATES PATENT AND TRADEMARK OFFICE

Commissioner for Patents
United States Patent and Trademark Office
P.O. Box 1450
Alexandria, VA 22313-1450
www.uspto.gov

Paper No. 8

KNOBBE MARTENS OLSON & BEAR LLP
2040 MAIN STREET
FOURTEENTH FLOOR
IRVINE CA 92614

COPY MAILED

JUN 3 0 2004

OFFICE OF PETITIONS

In re Application of	:	
Leonard Forbes	:	
Application No. 10/124,019	:	ON PETITION
Filed: April 16, 2002	:	
Attorney Docket No. MICRON.154DV1	:	

This is a decision on the petition under 37 CFR 1.78(a)(3), filed December 29, 2003, to accept an unintentionally delayed claim under 35 U.S.C.§ 120 for the benefit of prior-filed nonprovisional Application No. 09/939,417, filed August 24, 2001.

The petition is **DISMISSED AS MOOT**.

A petition under 37 CFR 1.78(a)(3) is only applicable to those applications filed on or after November 29, 2000.

The instant pending nonprovisional application was filed on April 16, 2002, and was pending at the time of filing of the instant petition. While a reference to the prior-filed nonprovisional application was not included in an ADS or in the first sentence of the specification following the title, reference nevertheless was made in the transmittal letter filed with the above-identified application.

The current procedure where a claim for priority under 37 CFR 1.78(a)(3) is not included in the first sentence of the specification or in an ADS but does appear either in the oath or declaration or a transmittal letter filed with the application and the Office notes the claim for priority, no petition will be required to accept a late claim for priority. This is because the application would have been scheduled for publication on the basis of the information concerning the claim submitted elsewhere in the application within the time period set forth in 37 CFR 1.78(a)(2). However, on the other hand, if the USPTO does not note the claim for priority to the nonprovisional application in the oath or declaration or transmittal letter submitted with the application, a petition will be required to accept a late claim for priority under 37 CFR 1.78(a)(3).[1] In the instant case, the Office noted the claim for priority of nonprovisional Application No. 09/939,417 in the transmittal letter filed with the application, as shown by its inclusion on the filing receipt.

---

[1] Note 66 Federal Register 67087 at 67089 (Dec. 28, 2001), effective December 28, 2001.

In view of the above, the $1,330 petition fee submitted is unnecessary and will be refunded to petitioner's deposit account in due course.

Petitioner is reminded that *"Since different matters may be considered by different branches or sections of the Patent and Trademark Office, each distinct subject, inquiry or order should be contained in a separate letter to avoid confusion and delay in answering letters dealing with different subjects."* **See 37 CFR 1.4(c).**

Any questions concerning this decision on petition may be directed to Karen Creasy at (703)305-8859. All other inquiries concerning either the examination procedures or status of the application should be directed to the Technology Center.

This application is being forwarded to Technology Center AU 2813 for processing the amendment filed December 29, 2003 and for consideration by the examiner of the claim under 35 U.S.C. § 120 and 37 CFR 1.78(a)(2) for the benefit of the prior-filed nonprovisional Application No. 09/939,417, filed on August 24, 2001.

Karen Creasy

Karen Creasy
Petitions Examiner
Office of Petitions
Office of the Deputy Commissioner
for Patent Examination Policy

UNITED STATES PATENT AND TRADEMARK OFFICE

COMMISSIONER FOR PATENTS
UNITED STATES PATENT AND TRADEMARK OFFICE
WASHINGTON, D.C. 20231
www.uspto.gov

Paper No. 4

COPY MAILED

AUG 23 2002

OFFICE OF PETITIONS

THORP REED & ARMSTRONG, LLP
ONE OXFORD CENTRE
301 GRANT STREET, 14TH FLOOR
PITTSBURGH PA 15219-1425

In re Application of
Jones
Application No.: 10/124,021
Filed: April 16, 2002
Attorney Docket No.: DB000929-000
For: METHOD OF DETERMINING LIBRARY PARAMETERS USING TIMING SURFACE PLANARITY

DECISION REFUSING STATUS UNDER 37 CFR 1.47(b)

This is a decision on the petition under 37 CFR 1.47(b), filed April 16, 2002.

The petition is **DISMISSED**.

Any request for reconsideration of this decision must be submitted within TWO (2) MONTHS from the mail date of this decision. Extensions of time under 37 CFR 1.136(a) are permitted. Any response should be entitled "Request for Reconsideration of Petition Under 37 CFR 1.47(a)" and may include an oath or declaration executed by the inventor. **Failure to respond will result in abandonment of the application.**

A grantable petition under 37 CFR 1.47(b) requires:

(1) proof that the non-signing inventor cannot be reached or refuses to sign the oath or declaration;
(2) an acceptable oath or declaration;
(3) the petition fee;
(4) a statement of the last known address of the non-signing inventor;
(5) proof of proprietary interest; and
(6) proof of irreparable damage.

Applicant lacks item (2) set forth above.

As to item (2), an oath or declaration for the patent application in compliance with 37 CFR 1.63 and 1.64 still has not been presented. The declaration has not been signed by a properly empowered representative of the Rule 1.47 applicant. **No one** has signed the declaration. An oath or declaration in compliance with 37 CFR 1.63 and 1.64 signed by the Rule 1.47(b) applicant on behalf of Mark Anthony Jones is REQUIRED. See MPEP 409.03(b).

The individual signing the declaration should include information pertaining to him/her. The Office requires a new declaration with the signer's name, title, the address where he/she normally receives mail, his/her residence, and his/her citizenship listed thereon in addition to the information pertaining to the inventor. As stated in the MPEP 409.03(b), where an oath is signed by a registered attorney on behalf of a corporation, either proof of the attorney's authority in the form of a statement signed by an appropriate corporate officer must be submitted, or the attorney

may simply state that he is authorized to sign on behalf of the corporation.

Further correspondence with respect to this matter should be addressed as follows:

By mail:	Commissioner for Patents Box DAC Washington, D.C. 20231
By facsimile:	(703) 308-6916 Attn: Office of Petitions
By hand:	Office of Petitions 2201 South Clark Place Crystal Plaza 4, Suite 3C23 Arlington, VA 22202

Telephone inquiries should be directed to the undersigned at (703) 308-6712.

E. Shirene Willis

E. Shirene Willis
Petitions Attorney
Office of Petitions
Office of the Deputy Commissioner
for Patent Examination Policy

I hereby certify that this correspondence is being deposited in the United States Postal Services as First Class Mail in an envelope address to:

Commissioner for Patents
Box DAC
Washington, D.C. 20231

Attorney for Applicant

Date: 3 October 2002

OIPE JC87 OCT 0 7 2002 PATENT & TRADEMARK OFFICE

DAC

#5

PATENT

Attorney Docket No.: DB000929-000

IN THE UNITED STATES PATENT AND TRADEMARK OFFICE

Applicant:	Jones	)		
		)	**Examiner:**	Not yet assigned
Serial No.:	Not yet assigned	)		
		)	**Art Unit:**	Not yet assigned
Filed:	16 April 2002	)		

Entitled: METHOD OF DETERMINING LIBRARY PARAMETERS USING TIMING SURFACE PLANARITY

REQUEST FOR RECONSIDERATION OF PETITION UNDER 37 CFR §1.47

Commissioner for Patents
Box DAC
Washington, DC 20231

RECEIVED
OCT 0 9 2002
OFFICE OF PETITIONS

Dear Sir:

Micron Technology, Inc. ("Micron") hereby submits a "Request for Reconsideration of Petition Under 37 CFR 1.47(a)." The original "Petition Pursuant to 37 CFR §1.47(b)" was filed concurrently with the patent application on 16 April 2002. The original petition was Dismissed for failing to present an acceptable oath or declaration pursuant to 37 CFR 1.63 and 1.64.

After receiving the Petition Decision, Applicant's attorneys contacted E. Shirene Willis (the USPTO's Petitions Attorney) on 28 August 2002. Ms. Willis instructed Applicant's attorneys to submit a Form PTO/SB/01, containing all pertinent information related to the non-cooperating inventor (less his signature), and an addendum containing the signature of a representative properly empowered to sign on behalf of the Applicant (see copy of Micron Technology, Inc. Certified Copy of Resolutions).

OIPE JC87
OCT 0 7 2002
PATENT & TRADEMARK OFFICE

PATENT

Attorney Docket No.: DB000929-000

IN THE UNITED STATES PATENT AND TRADEMARK OFFICE

Applicant:	Jones	)		
		)	**Examiner:**	Not yet assigned
Serial No.:	10/124,021	)		
		)	**Art Unit:**	Not yet assigned
Filed:	16 April 2002	)		

Entitled: METHOD OF DETERMINING LIBRARY PARAMETERS USING TIMING SURFACE PLANARITY

ADDENDUM -- Properly Empowered Representative of the Rule 1.47 Applicant

Name:	Michael L. Lynch
Residence:	
City:	Boise
State:	Idaho
Country:	USA
Citizenship:	USA
Mailing Address:	Micron Technology, Inc. 8000 S. Federal Way Mail Stop 525, P.O. Box 6 Boise, ID 83707-0006

RECEIVED
OCT 0 9 2002
OFFICE OF PETITIONS

Michael L. Lynch (Signature)
Chief Patent Counsel
Reg. No. 30,871
Micron Technology, Inc.

9-24-02
(Date)

Enclosed herewith, please find:

- a copy of the Decision Refusing Status Under 37 CFR 1.47(b) mailed on 23 August 2002;
- a completed Form PTO/SB/01 containing all pertinent information related to Mr. Anthony Mark Jones (i.e., the non-cooperating inventor), less his signature;
- an addendum signed by Michael L. Lynch, the Applicant's Chief Patent Counsel, who is a properly empowered representative of the Applicant;
- a copy of Micron Technology, Inc. Certified Copy of Resolutions; and
- a copy of the original "Petition Pursuant to 37 CFR §1.47(b)" and Exhibits A – F.

It is respectfully submitted that enclosed items, identified above, comply with the requirements of 37 CFR 1.63 and 1.64. Thus, it is respectfully requested that Micron's petition under 37 CFR § 1.47(b) be reconsidered and granted.

Respectfully Submitted,

Edward L. Pencoske
Reg. No. 29,688
THORP REED & ARMSTRONG, LLP
One Oxford Centre
301 Grant Street, 14th Floor
Pittsburgh, PA 15219-1425
(412) 394-7789

Dated: 3 October 2002

Attorney for Applicants

RECEIVED
OCT 0 9 2002
OFFICE OF PETITIONS

UNITED STATES PATENT AND TRADEMARK OFFICE

AUG 2 6 2002

COMMISSIONER FOR PATENTS
UNITED STATES PATENT AND TRADEMARK OFFICE
WASHINGTON, D.C. 20231
www.uspto.gov

OIPE JC87
OCT 0 7 2002
PATENT & TRADEMARK OFFICE

COPY

Paper No. 4

COPY MAILED

AUG 2 3 2002

OFFICE OF PETITIONS

THORP REED & ARMSTRONG, LLP
ONE OXFORD CENTRE
301 GRANT STREET, 14TH FLOOR
PITTSBURGH PA 15219-1425

In re Application of
Jones
Application No.: 10/124,021
Filed: April 16, 2002
Attorney Docket No.: DB000929-000
For: METHOD OF DETERMINING LIBRARY PARAMETERS USING TIMING SURFACE PLANARITY

DECISION REFUSING STATUS UNDER 37 CFR 1.47(b)

RECEIVED

OCT 0 9 2002

OFFICE OF PETITIONS

This is a decision on the petition under 37 CFR 1.47(b), filed April 16, 2002.

The petition is **DISMISSED**.

Any request for reconsideration of this decision must be submitted within TWO (2) MONTHS from the mail date of this decision. Extensions of time under 37 CFR 1.136(a) are permitted. Any response should be entitled "Request for Reconsideration of Petition Under 37 CFR 1.47(a)" and may include an oath or declaration executed by the inventor. **Failure to respond will result in abandonment of the application.**

A grantable petition under 37 CFR 1.47(b) requires:

(1) proof that the non-signing inventor cannot be reached or refuses to sign the oath or declaration;
(2) an acceptable oath or declaration;
(3) the petition fee;
(4) a statement of the last known address of the non-signing inventor;
(5) proof of proprietary interest; and
(6) proof of irreparable damage.

Applicant lacks item (2) set forth above.

As to item (2), an oath or declaration for the patent application in compliance with 37 CFR 1.63 and 1.64 still has not been presented. The declaration has not been signed by a properly empowered representative of the Rule 1.47 applicant. **No one** has signed the declaration. An oath or declaration in compliance with 37 CFR 1.63 and 1.64 signed by the Rule 1.47(b) applicant on behalf of Mark Anthony Jones is REQUIRED. See MPEP 409.03(b).

The individual signing the declaration should include information pertaining to him/her. The Office requires a new declaration with the signer's name, title, the address where he/she normally receives mail, his/her residence, and his/her citizenship listed thereon in addition to the information pertaining to the inventor. As stated in the MPEP 409.03(b), where an oath is signed by a registered attorney on behalf of a corporation, either proof of the attorney's authority in the form of a statement signed by an appropriate corporate officer must be submitted, or the attorney

may simply state that he is authorized to sign on behalf of the corporation.

Further correspondence with respect to this matter should be addressed as follows:

By mail:	Commissioner for Patents Box DAC Washington, D.C. 20231
By facsimile:	(703) 308-6916 Attn: Office of Petitions
By hand:	Office of Petitions 2201 South Clark Place Crystal Plaza 4, Suite 3C23 Arlington, VA 22202

Telephone inquiries should be directed to the undersigned at (703) 308-6712.

E. Shirene Willis

E. Shirene Willis
Petitions Attorney
Office of Petitions
Office of the Deputy Commissioner
for Patent Examination Policy

RECEIVED
OCT 0 9 2002
OFFICE OF PETITIONS

UNITED STATES PATENT AND TRADEMARK OFFICE

COMMISSIONER FOR PATENTS
UNITED STATES PATENT AND TRADEMARK OFFICE
WASHINGTON, D.C. 20231
www.uspto.gov

Paper No. 7

THORP REED & ARMSTRONG, LLP
ONE OXFORD CENTRE
301 GRANT STREET, 14TH FLOOR
PITTSBURGH PA 15219-1425

COPY MAILED

NOV 0 5 2002

OFFICE OF PETITIONS

In re Application of
Jones
Application No.: 10/124,021
Filed: April 16, 2002
Attorney Docket No.: DB000929-000
For: METHOD OF DETERMINING LIBRARY PARAMETERS USING TIMING SURFACE PLANARITY

DECISION ACCORDING STATUS UNDER 37 CFR 1.47(b)

This is in response to the reconsideration petition under 37 CFR 1.47(b), filed October 7, 2002.

The petition is granted.

Petitioner has shown that the non-signing inventor, Mr. Anthony Mark Jones has constructively refused to join in the filing of the above-identified application after having been presented with the application papers. Specifically, the exhibits to the petition establish that the inventor was mailed the application papers, including the specification, claims and drawings, received them, but failed to respond to the request that he sign the declaration. In addition, petitioner has shown that Micron Technology, Inc. has a proprietary interest in the above-identified application with a signed assignment document. Lastly, petitioner has submitted a declaration in compliance with 37 CFR 1.63 and 1.64 and petitioner has shown that such action is necessary to prevent irreparable damage.

This application and papers have been reviewed and found in compliance with 37 CFR 1.47(b). This application is hereby accorded Rule 1.47(b) status.

As provided in Rule 1.47(c), this Office will forward notice of this application's filing to the non-signing inventor at the address given in the petition. Notice of the filing of this application will also be published in the Official Gazette.

After this decision is mailed, the above-identified application will be forwarded to Technology Center 2800 for examination in due course.

Telephone inquiries should be directed to the undersigned at (703) 308-6712.

E. Shirene Willis

E. Shirene Willis
Senior Petitions Attorney
Office of Petitions
Office of the Deputy Commissioner
for Patent Examination Policy

UNITED STATES PATENT AND TRADEMARK OFFICE

COMMISSIONER FOR PATENTS
UNITED STATES PATENT AND TRADEMARK OFFICE
P.O. BOX 1450
ALEXANDRIA, VA 22313-1450
www.uspto.gov

Paper No. 10

GEORGE O. SAILE & ASSOCIATES
28 DAVIS AVENUE
POUGHKEEPSIE, NY 12603

COPY MAILED

OCT 3 1 2003

OFFICE OF PETITIONS

ON PETITION

In re Application of
Eberlein, Matthias
Application No. 10/124,053
Filed: April 17, 2002
Attorney Docket No. DS01-035

This is a decision on the petition under 37 C.F.R. § 1.137(b), filed October 1, 2003, to revive the above-identified application.

The petition is **granted.**

The above-identified application became abandoned for failure to reply in a timely manner to the Office action under Ex parte Quayle, 1935 Dec. Comm'r Pat. 11 (1935), mailed November 6, 2002, which set a shortened statutory period for reply of two (2) months. No extensions of time under the provisions of 37 CFR 1.136(a) were obtained. Accordingly, the above-identified application became abandoned on January 7, 2003. A Notice of Abandonment was mailed on July 28, 2003.

Petitioner has met the requirements to revive the above-identified application pursuant to 37 CFR 1.137(b).

The file is now being forwarded to Technology Center 2800 for further processing on the merits.

Telephone inquiries should be directed to Paralegal Liana Chase at (703) 306-0482.

Frances Hicks
Petitions Examiner
Office of Petitions
Office of the Deputy Commissioner
for Patent Examination Policy

UNITED STATES PATENT AND TRADEMARK OFFICE

Under Secretary of Commerce for Intellectual Property and
Director of the United States Patent and Trademark Office
Washington, D.C. 20231
www.uspto.gov

Paper No. 6

Frederick W. Gibb, III
McGinn & Gibb, PLLC
2568-A Riva Road, Suite 304
Annapolis, Maryland 21401

COPY MAILED

APR 1 7 2003

OFFICE OF PETITIONS

In re Application of
Souheng SUN
Application No. 10/124,078
Filed: April 17, 2002
Attorney Docket No. YOR920020091

DECISION
ON PETITION
37 CFR 1.10(c)

This decision is in response to the Request for Corrected Filing Receipt, filed June 11, 2002, which is being treated as a petition under 37 CFR 1.10(c) to accord a filing date to the instant application of April 17, 2002 based upon the date of deposit with the United States Postal Service, rather than the presently accorded date of April 16, 2002.

Petitioner requests the later filing date on the basis that the application was purportedly deposited with the U.S. Postal Service on April 17, 2002, pursuant to 37 CFR 1.10. The request is accompanied by a copy of petitioner's Express Mail receipt showing a date of receipt in Express Mail service of April 17, 2002 at the Legion Avenue Station, Annapolis, Maryland, and a certificate of mailing under 37 CFR 1.10 also bearing a date of April 17, 2002 and the same Express Mail label number thereon.

In view of the above, the application is entitled to a filing date of April 17, 2002. The petition is granted.

No petition fee is required and none has been charged.

The application is being returned to the Office of Initial Patent Examination for correction of the filing date to April 17, 2002.

Thereafter, the application will be returned to Technology Center 1700 for examination on the merits in due course.

Inquiries regarding this communication may be directed to B. Dayoan at (703) 308-3865 or, in her absence, to the undersigned at (703) 305-1820.

Brian Hearn
Senior Petitions Examiner
Office of Petitions
Office of the Deputy Commissioner
for Patent Examination Policy

UNITED STATES PATENT AND TRADEMARK OFFICE

UNITED STATES DEPARTMENT OF COMMERCE
United States Patent and Trademark Office
Address: COMMISSIONER FOR PATENTS
P.O. Box 1450
Alexandria, Virginia 22313-1450
www.uspto.gov

APPLICATION NO.	FILING DATE	FIRST NAMED INVENTOR	ATTORNEY DOCKET NO.	CONFIRMATION NO.
10/124,081	04/16/2002	John A. Devos	100110104	6724

22879 7590 06/04/2009
HEWLETT PACKARD COMPANY
P O BOX 272400, 3404 E. HARMONY ROAD
INTELLECTUAL PROPERTY ADMINISTRATION
FORT COLLINS, CO 80527-2400

EXAMINER
LEUNG, JENNIFER A

ART UNIT	PAPER NUMBER
1797	

NOTIFICATION DATE	DELIVERY MODE
06/04/2009	ELECTRONIC

Please find below and/or attached an Office communication concerning this application or proceeding.

The time period for reply, if any, is set in the attached communication.

Notice of the Office communication was sent electronically on above-indicated "Notification Date" to the following e-mail address(es):

JERRY.SHORMA@HP.COM
ipa.mail@hp.com
jessica.l.fusek@hp.com

UNITED STATES PATENT AND TRADEMARK OFFICE

Commissioner for Patents
United States Patent and Trademark Office
P.O. Box 1450
Alexandria, VA 22313-1450
www.uspto.gov

wk

Mailed : JUN 04 2009

In re Application of
John A. Devos et al.
Serial No. 10/124,081
Filed: April 16, 2002
For: Hydrogen Production System

DECISION ON PETITION

This is a decision on Applicants' request for supervisory review under 37 C.F.R. 1.181 to have a Terminal Disclaimer entered into the application.

On December 30, 2008, applicant along with a Reply Brief in the appeal of application 10/124,081 filed a Terminal Disclaimer. The filing was made to obviate a double patenting rejection thereby reducing the issues remaining on appeal. The Examiner refused to consider or enter the Terminal Disclaimer.

DECISION

The petition is **GRANTED**.

The Examiner is directed to have the Terminal disclaimer entered and considered.

/Gregory L Mills/
Gregory L. Mills, Acting Director
Technology Center 1700
Chemical and Materials Engineering

Steven L. Nichols
HEWLETT PACKARD COMPANY
P O BOX 272400, 3404 E. HARMONY ROAD
INTELLECTUAL PROPERTY ADMINISTRATION
FORT COLLINS CO 80527-2400

UNITED STATES PATENT AND TRADEMARK OFFICE

COMMISSIONER FOR PATENTS
UNITED STATES PATENT AND TRADEMARK OFFICE
WASHINGTON, D.C. 20231
www.uspto.gov

APPLICATION NUMBER	FILING/RECEIPT DATE	FIRST NAMED APPLICANT	ATTORNEY DOCKET NUMBER
10/124,113	04/16/2002	J. Gordon Foulkes	1919/26134-C3AAA/JPW/MVM

CONFIRMATION NO. 7943

FORMALITIES LETTER

OC000000008620663

John P. White, Esq.
Cooper & Dunham, LLP
1185 Avenue of the Americas
New York, NY 10036

OIPE JC176
OCT 1 8 2002
PATENT & TRADEMARK OFFICE

Date Mailed: 08/14/2002

NOTICE TO FILE CORRECTED APPLICATION PAPERS

Filing Date Granted

This application has been accorded an Application Number and Filing Date. The application, however, is informal since it does not comply with the regulations for the reason(s) indicated below. Applicant is given **TWO MONTHS** from the date of this Notice within which to correct the informalities indicated below. Extensions of time may be obtained by filing a petition accompanied by the extension fee under the provisions of 37 CFR 1.136(a)

The required item(s) identified below must be timely submitted to avoid abandonment:

- A substitute specification in compliance with 37 CFR 1.52 because:
  - The specification cannot be scanned or properly stored. Page(s)
    - Papers must be legibly written either by a typewriter or mechanical printer in permanent ink or its equivalent in portrait orientation on flexible, strong, smooth, non-shiny, durable, and white paper. Application papers must be presented in a form having sufficient clarity and contrast between the paper and the writing thereon to permit the direct reproduction of readily legible copies in any number by use of photographic, electrostatic, photo-offset, and microfilming processes and electronic reproduction by use of digital imaging and optical character recognition. Pages **135-142** are not in compliance with 37 CFR 1.52(a). *The drawings filed are unacceptable because:*
      Replacement page(s), together with a statement that the replacement page(s) contain no new matter, are required.
- Substitute drawings in compliance with 37 CFR 1.84 because:
  - drawings submitted to the Office are not electronically reproducible. Drawing sheets must be submitted on paper which is flexible, strong, white, smooth, non-shiny, and durable (see 37 CFR 1.84(e));
- This application clearly fails to comply with the requirements of 37 C.F.R. 1.821-1.825. Applicant's attention is directed to the final rulemaking notice published at 55 FR 18230 (May 1, 1990), and 1114 OG 29 (May

15, 1990). If the effective filing date is on or after July 1, 1998, see the final rulemaking notice published at 63 FR 29620 (June 1, 1998) and 1211 OG 82 (June 23, 1998). If the effective filing date is on or after September 8, 2000, see the final rulemaking notice published in the Federal Register at 65 FR 54604 (September 8, 2000) and 1238 OG 145 (September 19, 2000). Applicant must provide an initial computer readable form (CRF) copy of the "Sequence Listing", an initial paper or compact disc copy of the "Sequence Listing", as well as an amendment directing its entry into the application. Applicant must also provide a statement that the content of the sequence listing information recorded in computer readable form is identical to the written (on paper or compact disc) sequence listing and, where applicable, includes no new matter, as required by 37 CFR 1.821(e), 1.821(f), 1.821(g), 1.825(b), or 1.825(d). If applicant desires the sequence listing in the instant application to be identical with that of another application on file in the U.S. Patent and Trademark Office, such request in accordance with 37 CFR 1.821(e) may be submitted in lieu of a new CRF.

For questions regarding compliance to these requirements, please contact:

- **For Rules Interpretation, call (703) 308-4216**
- **To Purchase PatentIn Software, call (703) 306-2600**
- **For PatentIn Software Program Help, call (703) 306-4119 or e-mail at patin21help@uspto.gov or patin3help@uspto.gov**

A copy of this notice MUST be returned with the reply.

Customer Service Center
Initial Patent Examination Division (703) 308-1202
PART 2 - COPY TO BE RETURNED WITH RESPONSE

UNITED STATES PATENT AND TRADEMARK OFFICE

COMMISSIONER FOR PATENTS
UNITED STATES PATENT AND TRADEMARK OFFICE
WASHINGTON, D.C. 20231
www.uspto.gov
DW 09-02

Paper No. 3

MICHAEL H. GURIN
4132 COVE LANE, UNIT A
GLENVIEW IL 60025

COPY MAILED

SEP 30 2002

OFFICE OF PETITIONS

In re Application of Michael Gurin Application No. 10/124,131 Filed: 18 April, 2002 For: CHEWING GUM COMPOSITIONS AND METHOD OF USE	: : : : : :	ON PETITION

This is a decision on the paper filed on 20 May, 2002, concerning the filing date assigned to Application No. 10/124,131.

The petition is dismissed.

Petitioner asserts that the application was filed on 11 April, 2002, rather than the currently accorded filing date of 18 April, 2002. Petitioner also states that the specification is being "resubmitted" "to address the 'apparent' incorrect recordation of this specification as a continuation of U.S. Provisional Patent 60/286,233."

Any petition relating to the filing date of an application must be accompanied by the petition fee set forth in 37 CFR 1.17(h) (currently $130.00).[1] Patent and trademark fees and charges payable to the Patent and Trademark Office are required to be paid in advance, that is, at the time of requesting any action by the Office for which a fee or charge is payable.[2] As such, the petition fee is a prerequisite to the filing of the present petition, and the Office will not reach the merits of the petition unless and until the petition fee is submitted. Any request for reconsideration of this petition must be accompanied by the petition fee.

---

[1] MPEP 506.02 and 37 CFR 1.53(e).

[2] 37 CFR 1.22(a).

Additionally, it is noted that petitioner has provided no evidence (e.g. an itemized postcard receipt) supporting petitioners' assertion that the present provisional application was filed on 11 April, 2002.

Although it is unclear what relief petitioner is requesting in resubmitting the specification, petitioner should also note that no petition is needed to amend the specification of an application. Should petitioner wish to have a later-filed specification treated as the original disclosure, the application would be accorded the filing date of the later-filed application papers.

The petition is dismissed.

Further correspondence with respect to this matter should be addressed as follows:

By mail: Assistant Commissioner for Patents
Box DAC
Washington, D.C. 20231

By FAX: (703) 308-6916
Attn: Office of Petitions

By hand: Crystal Plaza Four, Suite 3C23
2201 S. Clark Place
Arlington, VA

The application is being forwarded to Technology Center 1700 for examination in due course.

Telephone inquiries concerning this matter may be directed to the undersigned at (703)308-6918.

D Wood

Douglas I. Wood
Senior Petitions Attorney
Office of Petitions
Office of the Deputy Commissioner
for Patent Examination Policy

UNITED STATES PATENT AND TRADEMARK OFFICE

Commissioner for Patents
United States Patent and Trademark Office
P.O. Box 1450
Alexandria, VA 22313-1450
www.uspto.gov

PFIZER INC
150 EAST 42ND STREET
5TH FLOOR - STOP 49
NEW YORK NY 10017-5612

COPY MAILED

JUL 0 6 2006

OFFICE OF PETITIONS

In re Application of	:	
Singer et al.	:	
Application No. 10/124,135	:	ON PETITION
Filed: April 17, 2002	:	
Attorney Docket No. PC11063A	:	

This is a decision on the petition under 37 C.F.R. § 1.137(b), filed April 26, 2006, to revive the above-identified application.

The petition is **GRANTED.**

The petition satisfies the conditions for revival pursuant to the provisions of 37 CFR 1.137(b) in that (1) the reply in the form of the Issue Fee Transmittal with payment of the issue/publication fees; (2) the petition fee; and (3) the required statement of unintentional delay have been received. Accordingly, the response has been accepted as having been unintentionally delayed.

This matter is being referred to the Publishing Division for processing into a patent.

Telephone inquiries regarding this decision should be directed to the undersigned at (571) 272-3282.

Liana Chase
Petitions Examiner
Office of Petitions

UNITED STATES PATENT AND TRADEMARK OFFICE

Commissioner for Patents
United States Patent and Trademark Office
P.O. Box 1450
Alexandria, VA 22313-1450
www.uspto.gov

PHARMACIA & UPJOHN
301 HENRIETTA ST
0228-32-LAW
KALAMAZOO, MI 49007

COPY MAILED

NOV 0 2 2004

OFFICE OF PETITIONS

ON PETITION

In re Application of	:
Jacobsen et al	:
Application No. 10/124,145	:
Filed: April 17, 2002	:
Attorney Docket No. 00419.US1	:

This is a decision on the petition under 37 CFR 1.137(b), filed August 19, 2004, to revive the above-identified application.

The petition is **GRANTED**.

The above-identified application became abandoned for failure to submit the issue fee in a timely manner in reply to the Notice of Allowance mailed March 24, 2004, which set a statutory period for reply of three (3) months. Accordingly, the above-identified application became abandoned on June 25, 2004.

There is no indication that the person signing the instant petition was ever given a power of attorney or authorization of agent to prosecute the above-identified application. If the person signing the instant petition desires to receive future correspondence regarding this application, the appropriate power of attorney or authorization of agent must be submitted. While a courtesy copy of this decision is being mailed to the person signing the instant petition, all future correspondence will be directed to the address currently of record until such time as appropriate instructions are received to the contrary.

Telephone inquiries concerning this decision should be directed to the undersigned at (571) 272-3208.

The application file is being forwarded to the Office of Patent Publication.

Karen Creasy

Karen Creasy
Petitions Examiner
Office of Petitions
Office of the Deputy Commissioner
for Patent Examination Policy

cc:
ANDREA DORIGO
PFIZER INC.
PATENT DEPARTMENT
150 EAST 42ND STREET - 5TH FLOOR
NEW YORK, NY 10017-5755

UNITED STATES PATENT AND TRADEMARK OFFICE

UNITED STATES DEPARTMENT OF COMMERCE
United States Patent and Trademark Office
Address: COMMISSIONER FOR PATENTS
P.O. Box 1450
Alexandria, Virginia 22313-1450
www.uspto.gov

LERNER, DAVID, LITTENBERG,
KRUMHOLZ & MENTLIK
600 SOUTH AVENUE WEST
WESTFIELD, NJ 07090

Mail Date: 04/21/2010

Applicant	: Christian Baccelli	: DECISION ON REQUEST FOR
Patent Number	: 7637950	: RECALCULATION of PATENT
Issue Date	: 12/29/2009	: TERM ADJUSTMENT IN VIEW
Appliction No	: 10/124,153	: OF WYETH AND NOTICE OF INTENT TO
Filed	: 04/17/2002	: ISSUE CERTIFICATE OF CORRECTION
		:

The Request for Recalculation is **GRANTED** to the extent indicated.

The patent term adjustment has been determined to be **0** days. The USPTO will *sua sponte* issue a certificate of correction reflecting the amount of PTA days determined by the recalculation.

Prior to the issuance of the certificate of correction, the USPTO will afford patentee an opportunity to be heard and request reconsideration. Accordingly, patentee has **one month or thirty (30) days**, whichever is longer, to file a request for reconsideration of this patent term adjustment calculation. See 35 U.S.C. 154(b)(3)(B)(ii) and 37 CFR 1.322(a)(4). No extensions of time will be granted under 37 CFR 1.136.

Patentee should use document code PET.OP if electronically filing a request for reconsideration of this patent term adjustment calculation. The patentee must also include the information required by 37 CFR 1.705(b)(2) and the fee required by 37 CFR 1.18(e). If patentee does not file a timely request for reconsideration of this patent term adjustment calculation including the information required by 37 CFR 1.705(b)(2) and the fee required by 37 CFR 1.18(e), the USPTO will issue a certificate of correction reflecting the PTA determination noted above.

Patentee should be aware that in order to preserve the right to review in the United States District Court for the District of Columbia of the USPTO patent term adjustment determination, patentee must ensure that he or she also take the steps required under 35 U.S.C. 154(b)(4)(A) in a timely manner. Nothing in the request for recalculation should be construed as providing an alternative time frame for commencing a civil action under 35 U.S.C. 154(b)(4)(A).

Any questions concerning this decision should be directed to the Office of Patent Legal Administration at 571-272-7702.

UNITED STATES PATENT AND TRADEMARK OFFICE

Commissioner for Patents
United States Patent and Trademark Office
P.O. Box 1450
Alexandria, VA 22313-1450
www.uspto.gov

MEDTRONIC, INC.
710 MEDTRONIC PARK
MINNEAPOLIS, MN 55432-9924

COPY MAILED

DEC 0 2 2005

OFFICE OF PETITIONS

In re Application of :
Thomas C. Bischoff :
Application No. 10/124,160 :
Filed: April 17, 2002 :
Attorney Docket No. P-10013.00 :

ON PETITION

This is a decision on the petition under 37 CFR 1.137(b), filed November 4, 2005, to revive the above-identified application.

The petition is **DISMISSED**.

Any request for reconsideration of this decision must be submitted within TWO (2) MONTHS from the mail date of this decision. Extensions of time under 37 CFR 1.136(a) are permitted. The reconsideration request should include a cover letter entitled "Renewed Petition under 37 CFR 1.137(b)." This is **not** a final agency action within the meaning of 5 U.S.C. § 704.

A grantable petition under 37 CFR 1.137(b) must be accompanied by: (1) the required reply, unless previously filed; (2) the petition fee as set forth in 37 CFR 1.17(m); (3) a statement that the entire delay in filing the required reply from the due date for the reply until the filing of a grantable petition pursuant to 37 CFR 1.137(b) was unintentional; and (4) any terminal disclaimer (and fee as set forth in 37 CFR 1.20(d)) required by 37 CFR 1.137(c). Where there is a question as to whether either the abandonment or the delay in filing a petition under 37 CFR 1.137 was unintentional, the Commissioner may require additional information. See MPEP 711.03(c)(III)(C) and (D). The instant petition lacks item (1).

The application became abandoned for failure to file a reply within the meaning of 37 CFR 1.113 to the final rejection of April 6, 2005, within the time period for reply. The amendment filed on October 6, 2005 did not *prima facie* place the application in condition for allowance, as noted in the Advisory Action mailed October 19, 2005. Therefore, the proposed reply required for consideration of a petition to revive must be a Notice of Appeal (and fee required by law); an amendment under 37 CFR 1.116 that cancels all the rejected claims or otherwise *prima facie* places the application in condition for allowance; the filing of a request for continued examination

(RCE) (accompanied by a submission and the requisite fee) under 37 CFR 1.114; or the filing of a continuing application under 37 CFR 1.53(b).

The petition was not accompanied by the reply to the outstanding final Office action of April 6, 2005 or, if filed, did not reference the type of reply filed. If the reply was the filing of a continuing application, in order to facilitate action, the petition to revive should include a reference to the filing of a continuing application and a letter of express abandonment conditional upon the granting of the petition and of a filing date to the continuing application. Therefore, before revival of this application can be effected, petitioner must either submit the required reply to the final Office action of April 6, 2005 or state the nature of the reply filed; i.e., continuation application under 37 CFR 1.53(b).

An extension of time under 37 CFR 1.136 must be filed prior to the expiration of the maximum extendable period for reply. See In re Application of S., 8 USPQ2d 1630, 1631 (Comm'r Pats. 1988). Accordingly, since the request for extension of time submitted with the petition was subsequent to the maximum extendable period for reply, no fee is necessary. Therefore, the assessed $120 extension of time fee will be refunded to petitioner's deposit account.

Further correspondence with respect to this matter should be addressed as follows:

By mail: Mail Stop PETITIONS
Commissioner for Patents
Post Office Box 1450
Alexandria, VA 22313-1450

By hand: Customer Service Window
Mail Stop Petitions
Randolph Building
401 Dulany Street
Alexandria, VA 22314

By fax: (571) 273-8300
ATTN: Office of Petitions

Any questions concerning this matter may be directed to the undersigned at (571) 272-3218.

Frances Hicks

Frances Hicks
Petitions Examiner
Office of Petitions

UNITED STATES PATENT AND TRADEMARK OFFICE

Commissioner for Patents
United States Patent and Trademark Office
P.O. Box 1450
Alexandria, VA 22313-1450
www.uspto.gov

MEDTRONIC, INC.
710 MEDTRONIC PARK
MINNEAPOLIS, MN 55432-9924

COPY MAILED

DEC 0 2 2005

OFFICE OF PETITIONS

In re Application of :
Thomas C. Bischoff :
Application No. 10/124,160 :
Filed: April 17, 2002 :
Attorney Docket No. P-10013.00 :

ON PETITION

This is a decision on the petition under 37 CFR 1.137(b), filed November 4, 2005, to revive the above-identified application.

The petition is **DISMISSED**.

Any request for reconsideration of this decision must be submitted within TWO (2) MONTHS from the mail date of this decision. Extensions of time under 37 CFR 1.136(a) are permitted. The reconsideration request should include a cover letter entitled "Renewed Petition under 37 CFR 1.137(b)." This is **not** a final agency action within the meaning of 5 U.S.C. § 704.

A grantable petition under 37 CFR 1.137(b) must be accompanied by: (1) the required reply, unless previously filed; (2) the petition fee as set forth in 37 CFR 1.17(m); (3) a statement that the entire delay in filing the required reply from the due date for the reply until the filing of a grantable petition pursuant to 37 CFR 1.137(b) was unintentional; and (4) any terminal disclaimer (and fee as set forth in 37 CFR 1.20(d)) required by 37 CFR 1.137(c). Where there is a question as to whether either the abandonment or the delay in filing a petition under 37 CFR 1.137 was unintentional, the Commissioner may require additional information. See MPEP 711.03(c)(III)(C) and (D). The instant petition lacks item (1).

The application became abandoned for failure to file a reply within the meaning of 37 CFR 1.113 to the final rejection of April 6, 2005, within the time period for reply. The amendment filed on October 6, 2005 did not *prima facie* place the application in condition for allowance, as noted in the Advisory Action mailed October 19, 2005. Therefore, the proposed reply required for consideration of a petition to revive must be a Notice of Appeal (and fee required by law); an amendment under 37 CFR 1.116 that cancels all the rejected claims or otherwise *prima facie* places the application in condition for allowance; the filing of a request for continued examination

(RCE) (accompanied by a submission and the requisite fee) under 37 CFR 1.114; or the filing of a continuing application under 37 CFR 1.53(b).

The petition was not accompanied by the reply to the outstanding final Office action of April 6, 2005 or, if filed, did not reference the type of reply filed. If the reply was the filing of a continuing application, in order to facilitate action, the petition to revive should include a reference to the filing of a continuing application and a letter of express abandonment conditional upon the granting of the petition and of a filing date to the continuing application. Therefore, before revival of this application can be effected, petitioner must either submit the required reply to the final Office action of April 6, 2005 or state the nature of the reply filed; i.e., continuation application under 37 CFR 1.53(b).

An extension of time under 37 CFR 1.136 must be filed prior to the expiration of the maximum extendable period for reply. See In re Application of S., 8 USPQ2d 1630, 1631 (Comm'r Pats. 1988). Accordingly, since the request for extension of time submitted with the petition was subsequent to the maximum extendable period for reply, no fee is necessary. Therefore, the assessed $120 extension of time fee will be refunded to petitioner's deposit account.

Further correspondence with respect to this matter should be addressed as follows:

By mail: Mail Stop PETITIONS
Commissioner for Patents
Post Office Box 1450
Alexandria, VA 22313-1450

By hand: Customer Service Window
Mail Stop Petitions
Randolph Building
401 Dulany Street
Alexandria, VA 22314

By fax: (571) 273-8300
ATTN: Office of Petitions

Any questions concerning this matter may be directed to the undersigned at (571) 272-3218.

Frances Hicks

Frances Hicks
Petitions Examiner
Office of Petitions

Petition Maintenance

File Edit View Show

Application

Application No: 10124160 Patent No: Clear

Title of Invention: Apparatus for transferring traction forces exerted on an implantable medical lead

Filing Date: 04/17/2002 Issue Date:

Inventor Name: BISCHOFF, THOMAS C.

Mailroom Date	Match	Initial Type	Decided Type	Decision	Decision Date
11/04/2005	Y	502			

Petition Detail

Mailroom Date *: 110405

Cert. of Mail Date:

Initial Petition Type *: 502 TO REVIVE AN ABANDONED

Initial Deciding * Office: OFFICE OF PETITIONS

☑ Matched to Application

☐ Reconsidered/Renewed

Decision: <NONE>

Decision Date: ☐ Next Business Day

Decided Petition Type:

Final Deciding Office:

Petitions Examiner: HICKS, FRANCES M

Add | Update | Delete Decision | Reprint

Print current window. kdiep

IFW Petition

UNITED STATES PATENT AND TRADEMARK OFFICE

Commissioner for Patents
United States Patent and Trademark Office
P.O. Box 1450
Alexandria, VA 22313-1450
www.uspto.gov

MEDTRONIC, INC.
710 MEDTRONIC PARK
MINNEAPOLIS, MN 55432-9924

COPY MAILED
JUL 25 2006
OFFICE OF PETITIONS

In re Application of	:
Thomas C. Bischoff	:
Application No. 10/124,160	:DECISION GRANTING PETITION
Filed: April 17, 2002	: UNDER 37 CFR 1.137(b)
Attorney Docket No. P-10013.00	:

This is a decision on the renewed petition under 37 CFR 1.137(b), filed January 6, 2006, to revive the above-identified application.

The petition is **GRANTED**.

The above-identified application became abandoned for failure to reply within the meaning of 37 CFR 1.113 in a timely manner to the final Office action mailed April 6, 2005, which set a shortened statutory period for reply of three (3) months. Extensions of time under the provisions of 37 CFR 1.136(a) were obtained. Accordingly, the above-identified application became abandoned on October 7, 2005.

The petition satisfies the conditions for revival pursuant to the provisions of 37 CFR 1.137(b) in that (1) the reply (Request for Continued Examination under 37 CFR 1.114 and submission, which, in this case, would be the unentered amendment of October 6, 2005); (2) the $1,500 petition fee; and (3) the required statement of unintentional delay have been received. Accordingly, the reply to the final Office action of April 6, 2005 is accepted as having been unintentionally delayed.

Telephone inquiries concerning this decision should be directed to the undersigned at (571) 272-3218.

This matter is being referred to Technology Center AU 3762 for appropriate processing of the Request for Continued Examination filed on January 6, 2006.

Frances Hicks
Petitions Examiner
Office of Petitions

UNITED STATES PATENT AND TRADEMARK OFFICE

Commissioner for Patents
United States Patent and Trademark Office
P.O. Box 1450
Alexandria, VA 22313-1450

AUG 25 2006

Price Henevekld Cooper Dewitt & Litton, LLP
695 Kenmoor, S.E.
P.O. Box 2567
Grand Rapids, MI 49501

In re Application of: SANAE UEDA Serial No.: 10/124,165 Filed: April 17, 2002 Docket: Tak03-P-318 Title: Language Learning Materials and Preparing Method Therefor	DECISION ON PETITION TO REINSTATE APPEAL UNDER 37 CFR 1.181

This is a decision on the petition filed July 5, 2005 to reinstate appeal.

The petition is **dismissed**.

The applicant filed a Request for Reinstatement of the Appeal and Supplemental Appeal Brief in this application. The request has been treated as a petition to reinstate appeal. In the petition, the applicant requested the earlier appeal be reinstated. With the petition, a supplemental appeal brief was filed in response to the outstanding non-final Office action of March 9, 2005. It appears to be the applicant's intention to further pursue the appeal instead of continuing prosecution before the examiner.

The record shows that:

1) On April 30, 2004 the examiner issued a final Office Action rejecting all claims.
2) On Nov. 30, 2004 the applicant filed an appeal brief appealing all rejected claims to the Board of Appeals and Interferences.
3) On March 9, 2005 the examiner re-opened prosecution in response to the appeal brief filed on Nov. 30, 2004 and introduced new ground of rejection.
4) In response to the examiner non-final Office action of March 9, 2005, the applicant filed the supplemental Appeal Brief on July 5, 2005.
5) On July 5, 2005, the present petition to request reinstatement of appeal was filed. The applicant requests that the earlier appeal be reinstated.

Applicable Rules and Statutes

MPEP 1204.01 Reinstatement of Appeal
If an appellant wishes to reinstate an appeal after prosecution is reopened, appellant must file a new notice of appeal in compliance with 37 CFR 41.31 and a complete new appeal brief in compliance with 37 CFR 41.37. Any previously paid appeal fees set forth in 37 CFR 41.20 for filing a notice of appeal, filing an appeal brief, and requesting an oral hearing (if applicable) will be applied to the new appeal on the same application as long as a final Board decision has not been made on the prior appeal. If, however, the appeal fees have increased since they were previously paid, then appellant must pay the difference between the current fee(s) and the amount previously paid. Appellant must file a complete new appeal brief in compliance with the format and content requirements of 37 CFR 41.37(c) within two months from the date of filing the new notice of appeal. See MPEP § 1205.

Analysis

On July 5, 2005, the applicant filed a new supplemental appeal brief, which properly addressed all new grounds of rejections as set forth in the non-final Office action of March 9, 2005. According to MPEP 1204.01, if an appellant wishes to reinstate an appeal after prosecution is reopened, he/she is required to file a new notice of appeal. The record shows no new Notice of Appeal was filed prior to or accompany with the Appeal Brief filed on July 5, 2005. This application is now considered abandoned for failure to file a new notice of appeal.

Accordingly, the appeal in this application is dismissed. Since there is no allowable claims found in the application, then this application is deemed abandoned for failure to file a new notice of appeal.

The application is being forwarded to the Supervisory Patent Examiner of Art Unit 3714 for further processing. Any request for reconsideration of this decision must be submitted within TWO (2) MONTHS from the mail date of this decision, 37 CFR 1.181(f). No extension of time under 37 CFR 1. 136(a) is permitted. The reconsideration request should include a cover letter entitled "Renewed Petition under 37 CFR 1.181." Alternatively, applicant may wish to consider filing a petition to revive under 37 CFR 1.137. The rules and MPEP sections cited may be found on the USPTO website at: www.uspto.gov. Any inquiry regarding this decision should be directed to Henry Yuen, Special Program Examiner, at (571) 272-4856.

PETITION DISMISSED

Karen M. Young

Karen M. Young, Director
Technology Center 3700

UNITED STATES PATENT AND TRADEMARK OFFICE

Commissioner for Patents
United States Patent and Trademark Office
P.O. Box 1450
Alexandria, VA 22313-1450
www.uspto.gov

7/13/07

Price Henevekld Cooper Dewitt & Litton, LLP
695 Kenmoor, S.E.
P.O. Box 2567
Grand Rapids, MI 49501

In re Application of: SANAE UEDA Serial No.: 10/124,165 Filed: April 17, 2002 Docket: Tak03-P-318 Title: Language Learning Materials and Preparing Method Therefor	DECISION ON PETITION TO REINSTATE APPEAL UNDER 37 CFR 1.181

This is a decision on the request for reconsideration on petition to reinstate appeal filed by facsimile on Sept. 18, 2006.

The petition to reinstate appeal is **granted**.

On September 18, 2006, the applicant filed the current request for reconsideration on the decision on the petition to reinstate appeal. In the request, the applicant noted that the appeal brief was filed on July 5, 2005. The MPEP provisions 1204.01 and 1207.04, requiring a new Notice of Appeal, were not applicable when the appeal brief was filed on July 5, 2005. The MPEP sections 1204.01 and 1207.04 only became effective in August of 2005. The applicable section of the MPEP at the time the appeal brief was filed was section 1208.02 of the Eight Edition, First Revision of the MPEP that became effect in February 2003.

With respect to the reopening of prosecution after appeal, the MPEP § 1208.02 stated:

> If reinstatement of the appeal is requested, the request must be accompanied by a supplemental appeal brief; however no new amendments, affidavits, or other evidence is permitted.
>
> After reopening of prosecution, appellant must exercise one of the following options to avoid abandonment of the application: (A) file a reply under 37 CFR 1.111, if the Office action is non-final;

(B) file a reply under 37 CFR 1.113, if the Office action is final; or
(C) request for reinstatement of the appeal.

The MPEP § 1208.02 did not require the filing of a new notice of appeal where prosecution had been reopened after appeal. The filing of a request for reinstatement of appeal itself was sufficient.

Additionally, the rule change to 37 CFR §41.31 that became effective on August 12, 2004 did not include a specific provision requiring a new notice of appeal where the appellant wished to reinstate an appeal after prosecution was reopened. Instead, §41.31 refers only to the notice of appeal requirement for those applicants whose claims have been twice rejected. The applicant complied with the requirements of §41.31 by filing a Notice of Appeal on November 5, 2004. Therefore, a new notice of appeal was not required at the time the latest appeal brief was filed.

The applicant filed the new appeal brief on July 5, 2005, which properly addressed all new grounds of rejection as set forth in the non-final Office action of March 9, 2005. As shown on the record, it is the applicant's intention to appeal the non-final rejection of claims rather than to continue with further prosecution. A notice of appeal was previously filed on Oct. 5, 2004. Therefore, no new notice of appeal was necessary under the old section of MPEP § 1208.02.

The holding of the abandonment is vacated. The applicant's request for reinstatement of the appeal with only the supplemental appeal brief is granted in view of the present appeal brief's filing under the transitional period.

The application is being forwarded to the Supervisory Patent Examiner of Art Unit 3714 for further process. Should petitioner have any further questions, he is invited to contact TC 3700 SPRE Henry Yuen at 571-272-4856.

PETITION GRANTED

Karen M. Young

Karen M. Young, Director
Technology Center 3700

UNITED STATES PATENT AND TRADEMARK OFFICE

Commissioner for Patents
United States Patent and Trademark Office
P.O. Box 1450
Alexandria, VA 22313-1450
www.uspto.gov

INTELLECTUAL PROPERTY LAW GROUP
12 SOUTH FIRST STREET, SUITE 1205
SAN JOSE, CA 95113

COPY MAILED

DEC 28 2005

OFFICE OF PETITIONS

In re Application of :
Francis M. Anton Jr. et al :
Application No. 10/124,172 : ON PETITION
Filed: April 16, 2002 :
Attorney Docket No. HEREUR.PT3 :

This is a decision on the petition under 37 CFR 1.137(b), filed November 28, 2005, to revive the above-identified application.

The petition is **GRANTED**.

The above-identified application became abandoned for failure to reply within the meaning of 37 CFR 1.113 in a timely manner to the final Office action mailed June 2, 2004, which set a shortened statutory period for reply of three (3) months. No extensions of time under the provisions of 37 CFR 1.136(a) were obtained. Accordingly, the above-identified application became abandoned on September 3, 2004.

The petition satisfies the conditions for revival pursuant to the provisions of 37 CFR 1.137(b) in that (1) the reply in the form of a Request for Continued Examination (RCE); (2) the petition fee; and (3) the required statement of unintentional delay have been received. Accordingly, the reply to the final Office action of June 2, 2004 is accepted as having been unintentionally delay.

Telephone inquiries concerning this decision should be directed to Wan Laymon at (571) 272-3220.

This matter is being referred to Technology Center AU 3624.

Wan Laymon

Wan Laymon
Petitions Examiner
Office of Petitions

UNITED STATES PATENT AND TRADEMARK OFFICE

Commissioner for Patents
United States Patent and Trademark Office
P.O. Box 1450
Alexandria, VA 22313-1450
www.uspto.gov

BLAKELY SOKOLOFF TAYLOR & ZAFMAN
12400 WILSHIRE BOULEVARD
SEVENTH FLOOR
LOS ANGELES, CA 90025-1030

COPY MAILED
JUN 15 2006
OFFICE OF PETITIONS

In re Application of	:	
Andrew Augustine Wajs	:	
Application No. 10/124,177	:	DECISION ON PETITION
Filed: April 16, 2002	:	TO WITHDRAW
Attorney Docket No. 5683P029	:	FROM RECORD
	:	

This is a decision on the Request to Withdraw as attorney or agent of record under 37 C.F.R. § 1.36(b), filed November 12, 2004.[1]

The request is **NOT APPROVED** as moot.

A review of the file record indicates that the power of attorney to Tarek N. Fahmi and all the attorneys/agents of record have been revoked by the assignee of the patent application on December 14, 2005. Accordingly, the request to withdraw under 37 C.F.R. § 1.36(b) is moot.

All future communications from the Office will continue to be directed to the below-listed address until otherwise notified by applicants.

This application is being referred to Technology Center AU 2623.

Telephone inquires concerning this decision should be directed to Wan Laymon at 571-272-3220.

Denise Pothier
Petitions Examiner
Office of Petitions

cc: SCHWEGMAN LUNDBERG WOESSNER & KLUTH/IMPINJ
PO BOX 2938
MINNEAPOLIS, MN 55402

---

[1] The instant request was only recently brought to the attention of the deciding official. The Office sincerely apologizes for the delay in responding to the instant petition and the inconvenience caused petitioner by this delay.

UNITED STATES PATENT AND TRADEMARK OFFICE

Commissioner for Patents
United States Patent and Trademark Office
P.O. Box 1450
Alexandria, VA 22313-1450
www.uspto.gov

FISH & RICHARDSON PC
P.O. BOX 1022
MINNEAPOLIS MN 55440-1022

COPY MAILED
JAN 15 2010

In re Application of	:	
James R. Hansen	:	
Application No. 10/124,181	:	DECISION GRANTING PETITION
Filed: April 17, 2002	:	UNDER 37 CFR 1.313(c)(2)
Attorney Docket No. 11333-016001	:	

This is a decision on the petition under 37 CFR 1.313(c)(2), filed January 15, 2010, to withdraw the above-identified application from issue after payment of the issue fee.

The petition is **GRANTED**.

The above-identified application is withdrawn from issue for consideration of a submission under 37 CFR 1.114 (request for continued examination). *See* 37 CFR 1.313(c)(2).

Petitioner is advised that the issue fee paid on December 16, 2009 cannot be refunded. If, however, this application is again allowed, petitioner may request that it be applied towards the issue fee required by the new Notice of Allowance.[1]

Telephone inquiries should be directed to Terri Johnson at (571) 272-2991.

This application is being referred to Technology Center AU 2456 for processing of the request for continued examination under 37 CFR 1.114 and for consideration of the concurrently filed information disclosure statement.

Terri Johnson
Petitions Examiner
Office of Petitions

---

[1] *The request to apply the issue fee to the new Notice may be satisfied by completing and returning the new Part B – Fee(s) Transmittal Form (along with any balance due at the time of submission). Petitioner is advised that the Issue Fee Transmittal Form* ***must*** *be completed and timely submitted to avoid abandonment of the application.*

UNITED STATES PATENT AND TRADEMARK OFFICE

COMMISSIONER FOR PATENTS
UNITED STATES PATENT AND TRADEMARK OFFICE
P.O. BOX 1450
ALEXANDRIA, VA 22313-1450
www.uspto.gov

NOV 22 2004

Medtronic, Inc.
710 Medtronic Parkway NE
MS-LC340
Minneapolis, MN 55432-5604

#8

In re Application of Thomas C. Bischoff Serial No. : 10/124,185 Filed : April 17, 2002 For : Drive Shaft Seal for a Medical Electrical Lead	: DECISION ON PETITION : TO WITHDRAW : HOLDING OF : ABANDONMENT :

This is a decision on petitioner's request filed via facsimile transmission on September 9, 2004, to review the holding of abandonment mailed August 20, 2004 for failure to respond to the Office action mailed December 29, 2003. There is no fee required for this petition.

In support of the request, petitioner has submitted a copy of a response that was submitted via facsimile transmission on February 19, 2004. The response included a certificate of facsimile transmission dated February 19, 2004. Petitioner has also included a copy of a facsimile transmission report confirming transmission of the papers in question on February 19, 2004. It is noted that the communication received February 19, 2004 did not include the correct Serial Number of the application. However, the communication included sufficient additional information that should have resulted in the matching of the papers with the correct file.

In view of the above, the Notice of Abandonment mailed August 20, 2004 is in error and is hereby vacated. The holding of abandonment is withdrawn. Upon the mailing of this decision, the application will be forwarded to the Examiner via the Legal Instruments Examiner for entry and consideration of the response filed February 19, 2004.

Summary: Holding of Abandonment Withdrawn.

John E. Kittle, Director
Groups 3730 and 3760
Phone: (703) 308-0873

ak/10/14/04

UNITED STATES PATENT AND TRADEMARK OFFICE

Commissioner for Patents
United States Patent and Trademark Office
P.O. Box 1450
Alexandria, VA 22313-1450
www.uspto.gov

APPLIED MATERIALS, INC.
2881 SCOTT BLVD. M/S 2061
SANTA CLARA, CA 95050

COPY MAILED

JAN 2 1 2005

OFFICE OF PETITIONS

In re Application of	:	
Steven C. Shannon, et. al.	:	
Application No. 10/124,191	:	ON PETITION
Filed: April 16, 2002	:	
Attorney Docket No. 6648/ETCH/DRIE	:	

This is a decision on the petition under 37 CFR 1.137(b), filed by facsimile transmission on September 24, 2004, to revive the above-identified application.

The above-identified application became abandoned for failure to submit the issue fee and publication fee in a timely manner in reply to the Notice of Allowance mailed April 20, 2004, which set a statutory period for reply of three (3) months. Accordingly, the above-identified application became abandoned after midnight July 20, 2004.

In response, petitioner submitted with the instant petition an authorization to charge the listed deposit account $1,330 for the petition to revive fee, $1,330 for the issue fee, $300 for the publication fee, and $6 for two (2) advance soft copies. As authorized, the above fees have been charged to petitioner's deposit account.

The petition is **GRANTED**.

The application file is being referred to the Office of Publications, for further processing into a patent.

Telephone inquiries concerning this decision should be directed to the undersigned at (571) 272-3226.

Andrea Smith
Petitions Examiner
Office of Petitions
Office of the Deputy Commissioner
for Patent Examination Policy

UNITED STATES PATENT AND TRADEMARK OFFICE

COMMISSIONER FOR PATENTS
UNITED STATES PATENT AND TRADEMARK OFFICE
P.O. BOX 1450
ALEXANDRIA, VA 22313-1450
www.uspto.gov

Paper No.

FITZPATRICK, CELLA, HARPER & SCINTO
30 ROCKEFELLER PLAZA
NEW YORK, NY 10112-3801

COPY MAILED

APR 21 2004

OFFICE OF PETITIONS

In re Application of:	
Sellinger et al.	
Application No. 10/124,236	DECISION DISMISSING
Filed: April 18, 2002	PETITION UNDER
Title of Invention: SEMICONDUCTING	37 CFR 1.47(a) and
HOLE INJECTING MATERIALS FOR	37 CFR 1.48
ORGANIC LIGHT EMITTING DEVICES	

This is in response to the petition under 37 CFR 1.47(a), to allow the other inventor(s) to proceed with the application on behalf of himself or herself and the nonsigning inventor(s).

The petition is **dismissed**.

Rule 47 applicant is given TWO (2) MONTHS from the mailing date of this decision to reply, correcting the below-noted deficiencies. Any reply should be entitled "Request for Reconsideration of Petition Under 37 CFR 1.47(a)"; should only address the deficiencies noted below, except that the reply may include an oath or declaration executed by the non-signing inventor, AND BE ADDRESSED TO petitions Attorney Derek L. Woods. Failure to respond will result in abandonment of the application. Any extensions of time will be governed by 37 CFR 1.136(a).

Applicant seeks to correct the inventorship in the above-identified application. A grantable petition under 37 CFR 1.48 requires (1) a request to correct the inventorship that sets forth the desired inventorship; (2) A statement from each person being added as an inventor and from each person being deleted as an inventor that the error in inventorship occurred without deceptive intention on his or her part; (3) An oath or declaration by the actual inventor or inventors as required by §1.63 or as permitted by §§ 1.42, 1.43 or 1.47; (4) The processing fee as set forth in §1.17(i); and (5) If an assignment has been executed by any of the original named inventors, the written consent of the assignee.

Applicant lacks item (3) above. The oath or declaration presented fails to list all inventors. The nonsigning inventor has not been included in the oath or declaration presented.

> While each inventor need not execute the same oath or declaration, each oath or declaration executed must contain a complete listing of all inventors so as to clearly indicate what each inventor believes to be the appropriate inventive entity. Where individual declarations are executed, they must be submitted as individual declarations rather than combined into one declaration. MPEP § 201.03.

Further as to item (3), an oath or declaration as permitted by 37 CFR 1.47(a) has not been presented. A grantable petition under 37 CFR 1.47(a) requires: (1) proof that the non-signing inventor cannot be reached or refuses to sign the oath or declaration after having been presented with the application papers (specification, claims and drawings); (2) an acceptable oath or declaration in compliance with 35 U.S.C. §§ 115 and 116; (3) the petition fee; and (4) a statement of the last known address of the non-signing inventor. Applicant lacks items (1) and (2) set forth above.

As to item (1), where it is alleged that an applicant refuses to join an application, the applicant must establish that the nonsigning inventor was presented with the application for signature. The Manual of Patent Examining Procedure ("MPEP") states that

> A refusal by an inventor to sign an oath or declaration when the inventor has not been presented with the application papers does not itself suggest that the inventor is refusing to join the application unless it is clear that the inventor understands exactly what he or she is being asked to sign and refuses to accept the application papers. A copy of the application papers should be sent to the last known address of the nonsigning inventor, or, if the

nonsigning inventor is represented by counsel, to the address of the nonsigning inventor's attorney.

MPEP 409.03(d).

As to item (2), the oath or declaration must list all inventors.

Conclusion

Applicant must mail the application and oath or declaration to the nonsigning inventor, and present an oath or declaration listing all inventors, signed by the available inventors. Further correspondence with respect to this matter should be addressed as follows:

By mail: Commissioner for Patents
PO Box 1450
Alexandria, VA 22313-1450

By FAX: (703) 872-9306
Attn: Office of Petitions

By hand: 2201 South Clark Place
Customer Window
Crystal Plaza Two, Lobby Room 1B03
Arlington, VA 22202

Telephone inquiries concerning this decision should be directed to the undersigned at (703) 305-0014.

Derek L. Woods
Petitions Attorney
Office of Petitions

UNITED STATES PATENT AND TRADEMARK OFFICE

COMMISSIONER FOR PATENTS
UNITED STATES PATENT AND TRADEMARK OFFICE
P.O. BOX 1450
ALEXANDRIA, VA 22313-1450
www.uspto.gov

#12

FITZPATRICK CELLA HARPER & SCINTO
30 ROCKEFELLER PLAZA
NEW YORK, NY 10112-3801

COPY MAILED

FEB 06 2004

OFFICE OF PETITIONS

In re Application of
Bing R. Hsieh et al
Application No. 10/124,236
Filed: April 18, 2002
Attorney Docket No. 03650.001014

ON PETITION

This is a decision on the petition, filed January 29, 2004, under 37 CFR 1.313(c)(2) to withdraw the above-identified application from issue after payment of the issue fee.

The petition is **GRANTED**.

The above-identified application is withdrawn from issue for consideration of a submission under 37 CFR 1.114 (request for continued examination). See 37 CFR 1.313(c)(2).

Petitioner is advised that the issue fee paid on January 13, 2004 in the above-identified application cannot be refunded. If, however, the above-identified application is again allowed, petitioner may request that it be applied towards the issue fee required by the new Notice of Allowance.[1]

Telephone inquiries should be directed to Irvin Dingle at (703) 306-5684.

After receipt of the file in the Office of Petitions, the file will be forwarded to Technology Center AU 1774 for processing of the request for continued examination under 37 CFR 1.114 and for consideration of the concurrently filed amendment.

Irvin Dingle
Petitions Examiner
Office of Petitions
Office of the Deputy Commissioner
for Patent Examination Policy

---

[1] The request to apply the issue fee to the new Notice may be satisfied by completing and returning the new Issue Fee Transmittal Form PTOL-85(b), which includes the following language thereon: "Commissioner for Patents is requested to apply the Issue Fee and Publication Fee (if any) or re-apply any previously paid issue fee to the application identified above." Petitioner is advised that, whether a fee is indicated as being due or not, the Issue Fee Transmittal Form **must** be completed and timely submitted to avoid abandonment. Note the language in bold text on the first page of the Notice of Allowance and Fee(s) Due (PTOL-85).

UNITED STATES PATENT AND TRADEMARK OFFICE

COMMISSIONER FOR PATENTS
UNITED STATES PATENT AND TRADEMARK OFFICE
P.O. BOX 1450
ALEXANDRIA, VA 22313-1450
www.uspto.gov

Paper No.

FITZPATRICK, CELLA, HARPER & SCINTO
30 ROCKEFELLER PLAZA
NEW YORK, NY 10112-3801

COPY MAILED
JUL 0 8 2004
OFFICE OF PETITIONS

In re Application of:	:	
Hseih et al.	:	
Application No. 10/124,236	:	DECISION GRANTING
Filed: April 18, 2002	:	PETITION UNDER
Title of Invention: SEMICONDUCTING	:	37 CFR 1.183
HOLE INJECTING MATERIALS FOR	:	
ORGANIC LIGHT EMITTING DEVICES	:	

This is in response to the Request for Reconsideration of Petition under 37 CFR 1.47(a), filed June 21, 2004, to change the inventive entity in the above application. Applicant seeks waiver of 37 CFR 1.48(a)(3), to allow the other inventor(s) to proceed with the application on behalf of himself or herself and the nonsigning inventor(s). The petition is properly treated under 37 CFR 1.183.

The petition is **granted**.

Applicant asserts that through error, and without deceptive intent, that inventor Ghassan E. Jabbour was not joined in the original application. Applicant further asserts that inventor Bing R. Hseih refuses to execute the oath or declaration as required by 37 CFR 1.48(a)(3), and petitions for waiver of that rule to the extent that it requires an oath or declaration executed by the actual inventors. In support of this request, Applicant files a grantable petition under 37 CFR 1.47(a), demonstrating that inventor Hseih refuses to execute the oath or declaration after having been presented with the application for signature.

Office records have been corrected to reflect the addition of inventor Ghassan E. Jabbour.

The application is an image file wrapper and, as such, no forwarding of the file is required. Office records reflect the application has been withdrawn from issue and that a Request for Continued Examination ("RCE") has been filed. Notice of this Decision will be sent to Technology Center Art Unit 1774 and

continued examination of the application will proceed in due course.

Telephone inquiries concerning this decision should be directed to the undersigned at (703) 305-0014.

Derek L. Woods
Petitions Attorney
Office of Petitions

UNITED STATES PATENT AND TRADEMARK OFFICE

Commissioner for Patents
United States Patent and Trademark Office
P. O. Box 1450
Alexandria, VA 22313-1450
www.uspto.gov

Paper No. 9

ARENT FOX KINTNER PLOTKIN & KAHN PLLC
1050 CONNECTICUT AVENUE
SUITE 400
WASHINGTON DC 20036-5339

COPY MAILED

SEP 05 2003

OFFICE OF PETITIONS

In re Application of
Shigeharu Matsushita
Application No. 10/124,262
Filed: April 18, 2002
Attorney Docket No. 024808-00006

DECISION GRANTING PETITION
UNDER 37 CFR 313(c)(2)

This is a decision on the petition, filed September 4, 2003, under 37 CFR 1.313(c)(2) to withdraw the above-identified application from issue after payment of the issue fee.

The petition is **GRANTED**.

The above-identified application is withdrawn from issue for consideration of a submission under 37 CFR 1.114 (request for continued examination). See 37 CFR 1.313(c)(2).

Petitioner is advised that the issue fee paid on June 27, 2003 in the above-identified application cannot be refunded. If, however, the above-identified application is again allowed, petitioner may request that it be applied towards the issue fee required by the new Notice of Allowance.[1]

Telephone inquiries should be directed to the undersigned at (703) 305-8680.

Upon receipt of the file in the Office of Petitions, the file will be forwarded to Technology Center AU 2818 for processing of the request for continued examination under 37 CFR 1.114 and for consideration of the concurrently filed Information Disclosure Statement.

Frances Hicks
Petitions Examiner
Office of Petitions
Office of the Deputy Commissioner
for Patent Examination Policy

---

[1] The request to apply the issue fee to the new Notice may be satisfied by completing and returning the new Issue Fee Transmittal Form PTOL-85(b), which includes the following language thereon: "Commissioner for Patents is requested to apply the Issue Fee and Publication Fee (if any) or re-apply any previously paid issue fee to the application identified above." Petitioner is advised that, whether a fee is indicated as being due or not, the Issue Fee Transmittal Form **must** be completed and timely submitted to avoid abandonment. Note the language in bold text on the first page of the Notice of Allowance and Fee(s) Due (PTOL-85).

PART B - FEE(S) TRANSMITTAL

Complete and send this form, together with applicable fee(s), to: Mail Box ISSUE FEE
Commissioner for Patents
Washington, D.C. 20231
Fax (703)746-4000

INSTRUCTIONS: This form should be used for transmitting the ISSUE FEE and PUBLICATION FEE (if required). Blocks 1 through 4 should be completed where appropriate. All further correspondence including the Patent, advance orders and notification of maintenance fees will be mailed to the current correspondence address as indicated unless corrected below or directed otherwise in Block 1, by (a) specifying a new correspondence address; and/or (b) indicating a separate "FEE ADDRESS" for maintenance fee notifications.

CURRENT CORRESPONDENCE ADDRESS (Note: Legibly mark-up with any corrections or use Block 1)

7590 04/08/2003

ARENT FOX KINTNER PLOTKIN & KAHN, PLLC
Suite 400
1050 Connecticut Avenue, N.W.
Washington, DC 20036-5339

OIPE JC98 JUN 27 2003 PATENT & TRADEMARK OFFICE

Note: A certificate of mailing can only be used for domestic mailings of the Fee(s) Transmittal. This certificate cannot be used for any other accompanying papers. Each additional paper, such as an assignment or formal drawing, must have its own certificate of mailing or transmission.

Certificate of Mailing or Transmission

I hereby certify that this Fee(s) Transmittal is being deposited with the United States Postal Service with sufficient postage for first class mail in an envelope addressed to the Box Issue Fee address above, or being facsimile transmitted to the USPTO, on the date indicated below.

(Depositor's name)
(Signature)
(Date)

APPLICATION NO.	FILING DATE	FIRST NAMED INVENTOR	ATTORNEY DOCKET NO.	CONFIRMATION NO.
10/124,262	04/18/2002	Shigeharu Matsushita	024808-00006	9277

TITLE OF INVENTION: FERROELECTRIC MEMORY AND OPERATING METHOD THEREFOR

APPLN. TYPE	SMALL ENTITY	ISSUE FEE	PUBLICATION FEE	TOTAL FEE(S) DUE	DATE DUE
nonprovisional	NO	$1300	$300	$1600	07/08/2003

EXAMINER	ART UNIT	CLASS-SUBCLASS
NGUYEN, TAN	2818	365-145000

1. Change of correspondence address or indication of "Fee Address" (37 CFR 1.363).

☐ Change of correspondence address (or Change of Correspondence Address form PTO/SB/122) attached.

☐ "Fee Address" indication (or "Fee Address" Indication form PTO/SB/47; Rev 03-02 or more recent) attached. **Use of a Customer Number is required.**

2. For printing on the patent front page, list (1) the names of up to 3 registered patent attorneys or agents OR, alternatively, (2) the name of a single firm (having as a member a registered attorney or agent) and the names of up to 2 registered patent attorneys or agents. If no name is listed, no name will be printed.

1 ARENT FOX KINTNER
2 ~~PLOTKIN & KAHN~~, PLLC
3

3. ASSIGNEE NAME AND RESIDENCE DATA TO BE PRINTED ON THE PATENT (print or type)

PLEASE NOTE: Unless an assignee is identified below, no assignee data will appear on the patent. Inclusion of assignee data is only appropriate when an assignment has been previously submitted to the USPTO or is being submitted under separate cover. Completion of this form is NOT a substitute for filing an assignment.

(A) NAME OF ASSIGNEE: Sanyo Electric Co., Ltd.

(B) RESIDENCE: (CITY and STATE OR COUNTRY): Osaka, JAPAN

Please check the appropriate assignee category or categories (will not be printed on the patent) ☐ individual ☐ corporation or other private group entity ☐ government

4a. The following fee(s) are enclosed:

XX ☐ Issue Fee
X ☐ Publication Fee
X ☐ Advance Order - # of Copies Ten (10)

4b. Payment of Fee(s):

XX ☐ A check in the amount of the fee(s) is enclosed.
☐ Payment by credit card. Form PTO-2038 is attached.
XX ☐ The Commissioner is hereby authorized by charge the required fee(s), or credit any overpayment, to Deposit Account Number 01-2300 (enclose an extra copy of this form).

Commissioner for Patents is requested to apply the Issue Fee and Publication Fee (if any) or to re-apply any previously paid issue fee to the application identified above.

(Authorized Signature) (Date)
Charles N. Mammelstein Reg.No.25,895 27 June 2003

NOTE: The Issue Fee and Publication Fee (if required) will not be accepted from anyone other than the applicant; a registered attorney or agent; or the assignee or other party in interest as shown by the records of the United States Patent and Trademark Office.

This collection of information is required by 37 CFR 1.311. The information is required to obtain or retain a benefit by the public which is to file (and by the USPTO to process) an application. Confidentiality is governed by 35 U.S.C. 122 and 37 CFR 1.14. This collection is estimated to take 12 minutes to complete, including gathering, preparing, and submitting the completed application form to the USPTO. Time will vary depending upon the individual case. Any comments on the amount of time you require to complete this form and/or suggestions for reducing this burden, should be sent to the Chief Information Officer, U.S. Patent and Trademark Office, U.S. Department of Commerce, Washington, D.C. 20231. DO NOT SEND FEES OR COMPLETED FORMS TO THIS ADDRESS. SEND TO: Commissioner for Patents, Washington, DC 20231.

Under the Paperwork Reduction Act of 1995, no persons are required to respond to a collection of information unless it displays a valid OMB control number.

06/30/2003 SLUANG2 00000055 10124262

01 FC:1501 1300.00 OP
02 FC:1504 300.00 OP
03 FC:8001 30.00 OP

TRANSMIT THIS FORM WITH FEE(S)

UNITED STATES PATENT AND TRADEMARK OFFICE

COMMISSIONER FOR PATENTS
UNITED STATES PATENT AND TRADEMARK OFFICE
P. O. BOX 1450
ALEXANDRIA, VA 22313-1450
www.uspto.gov

Paper No. 10

Date : September 5, 2003

TO : Director, Office of Patent Publication

FROM : Office of the Deputy Commissioner for Patent Examination Policy

SUBJECT : Withdrawal from Issue of **Application No. 10/124,262**

Applicant(s) : Shigeharu Matsushita
Application No. : 10/124,262
Filed : April 18, 2002

The above-identified application has been assigned Patent No. 6,618,285 and an issue date of September 9, 2003.

It is hereby directed that this application be withdrawn from issue at the request of the applicant. Do not refund the issue fee.

The following erratum should be published in the Official Gazette if the above-identified application is published in the OG of September 9, 2003:

> **"All reference to Patent No. 6,618,285 to Shigeharu Matsushita of Japan for FERROELECTRIC MEMORY AND OPERATING METHOD THEREFOR appearing in the Official Gazette of September 9, 2003 should be deleted since no patent was granted."**

Frances Hicks
Frances Hicks
Petitions Examiner
Office of Petitions
Office of the Deputy Commissioner
for Patent Examination Policy

cc: Geraldine Dozier, Crystal Park 3-441 (FAX-306-2737)
Deneise Boyd, Crystal Park 2, Suite 1100 (FAX-308-5413)
Mary Louise McAskill, Crystal Park 3-910 (FAX 305-4372)
Niomi Farmer, Crystal Park 3-910 (FAX-305-4372)
Mary E. Johnson (Cookie), P/OCS, CM1-6D07
Duane Davis (CDS), CM1-6A07
Tamara K. Greene, PK3-910

UNITED STATES PATENT AND TRADEMARK OFFICE

Commissioner for Patents
United States Patent and Trademark Office
P.O. Box 1450
Alexandria, VA 22313-1450
www.uspto.gov

Blakely Sokoloff Taylor & Zafman LLP
12400 Wilshire Boulevard
7th Floor
Los Angeles, CA 90025

MAILED

APR 1 5 2005

Technology Center 2100

In re Application of:
Andrew Augustine WAJS
Application No.:10/124,287
Filed: April 16, 2002
For: METHOD FOR DISTRIBUTING KEYS AMONG A NUMBER OF SECURE DEVICES, METHOD FOR COMMUNICATING WITH A NUMBER OF SECURE DEVICES, SECURITY SYSTEM, AND SET OF SECURE DEVICES

DECISION ON REQUEST TO WITHDRAW AS ATTORNEY OR AGENT

This is a decision on the Request to Withdraw from Representation filed November 12, 2004.

A grantable request to withdraw as attorney of record should indicate thereon the present mailing addresses of the attorney(s) who is/are withdrawing from the record and of the applicant. The request for withdrawal must be signed by every attorney seeking to withdraw or contain a clear indication that one attorney is signing on behalf of another/others. A request to withdraw will not be approved unless at least 30 (thirty) days would remain between the date of approval and the later of the expiration date of a time to file a response or the expiration date of the maximum time period which can be extended under 37 C.F.R. § 1.136(a). The effective date of withdrawal being the date of decision and not the date of request. See M.P.E.P. § 402.06. 37 C.F.R. § 1.36 further requires that the applicant or patent owner be notified of the withdrawal of the attorney or agent.

The request is **GRANTED**.

All future communications from the Office will be directed to the below-listed address until otherwise notified by applicant. This correspondence address is provided by the withdrawn attorney(s). Applicant is reminded of the obligation to promptly notify the Patent and Trademark Office (Office) of any change in correspondence address to ensure receipt of all communications from the Office.

For Vincent N. Trans
Special Program Examiner
Technology Center 2100
Computer Architecture, Software, and
Information Security
571-272-3613

cc: Schwegman, Lundberg, Woessner & Kluth, P.A.
121 South Eighth Street
Suite 1600
Minneapolis, MN 55402

UNITED STATES PATENT AND TRADEMARK OFFICE

COMMISSIONER FOR PATENTS
UNITED STATES PATENT AND TRADEMARK OFFICE
P.O. BOX 1450
ALEXANDRIA, VA 22313-1450
www.uspto.gov

Paper No. 8

ROCHE DIAGNOSTICS CORPORATION
9115 HAGUE ROAD, BLDG. D
P.O. BOX 50457
INDIANAPOLIS, IN 46250-0457

COPY MAILED

MAR 1 7 2004

OFFICE OF PETITIONS

In re Application of
Watzele et al.
Application No. 10/124,294
Filed: April 17, 2002
Attorney Docket No. RDID01045US

ON PETITION

This is a decision on the petition under 37 C.F.R. § 1.137(b), filed March 5, 2004, to revive the above-identified application.

The petition is **granted.**

The above-identified application became abandoned for failure to reply in a timely manner to the Notice to File Missing Parts of Application (Notice) mailed May 29, 2002. The Notice set a period for reply of two (2) months from the mail date of the Notice. No extensions of time under the provisions of 37 CFR 1.136(a) were obtained. Accordingly, the above-identified application became abandoned on July 30, 2002. A Notice of Abandonment was mailed on January 14, 2004.

Petitioner has met the requirements to revive the above-identified application pursuant to 37 CFR 1.137(b).

The file is now being forwarded to the Office of Initial Patent Examination for further processing.

Telephone inquiries should be directed to the undersigned at (703) 306-0482.

Liana Chase
Petitions Examiner
Office of Petitions
Office of the Deputy Commissioner
for Patent Examination Policy

UNITED STATES PATENT AND TRADEMARK OFFICE

UNITED STATES DEPARTMENT OF COMMERCE
United States Patent and Trademark Office
Address: COMMISSIONER FOR PATENTS
P.O. Box 1450
Alexandria, Virginia 22313-1450
www.uspto.gov

HARNESS, DICKEY & PIERCE, P.L.C.
P.O. BOX 8910
RESTON, VA 20195

Mail Date: 04/21/2010

Applicant	: Kenneth C. Budka	: DECISION ON REQUEST FOR
Patent Number	: 7577227	: RECALCULATION of PATENT
Issue Date	: 08/18/2009	: TERM ADJUSTMENT IN VIEW
Appliction No	: 10/124,298	: OF WYETH AND NOTICE OF INTENT TO
Filed	: 04/18/2002	: ISSUE CERTIFICATE OF CORRECTION
		:

The Request for Recalculation is **GRANTED** to the extent indicated.

The patent term adjustment has been determined to be **2160** days. The USPTO will *sua sponte* issue a certificate of correction reflecting the amount of PTA days determined by the recalculation.

Prior to the issuance of the certificate of correction, the USPTO will afford patentee an opportunity to be heard and request reconsideration. Accordingly, patentee has **one month or thirty (30) days**, whichever is longer, to file a request for reconsideration of this patent term adjustment calculation. See 35 U.S.C. 154(b)(3)(B)(ii) and 37 CFR 1.322(a)(4). No extensions of time will be granted under 37 CFR 1.136.

Patentee should use document code PET.OP if electronically filing a request for reconsideration of this patent term adjustment calculation. The patentee must also include the information required by 37 CFR 1.705(b)(2) and the fee required by 37 CFR 1.18(e). If patentee does not file a timely request for reconsideration of this patent term adjustment calculation including the information required by 37 CFR 1.705(b)(2) and the fee required by 37 CFR 1.18(e), the USPTO will issue a certificate of correction reflecting the PTA determination noted above.

Patentee should be aware that in order to preserve the right to review in the United States District Court for the District of Columbia of the USPTO patent term adjustment determination, patentee must ensure that he or she also take the steps required under 35 U.S.C. 154(b)(4)(A) in a timely manner. Nothing in the request for recalculation should be construed as providing an alternative time frame for commencing a civil action under 35 U.S.C. 154(b)(4)(A).

Any questions concerning this decision should be directed to the Office of Patent Legal Administration at 571-272-7702.

UNITED STATES PATENT AND TRADEMARK OFFICE

COMMISSIONER FOR PATENTS
UNITED STATES PATENT AND TRADEMARK OFFICE
P.O. BOX 1450
ALEXANDRIA, VA 22313-1450
www.uspto.gov

Paper No.

SUGHRUE MION, PLLC
2100 PENNSYLVANIA AVENUE, N.W.
SUITE 800
WASHINGTON DC 20037

COPY MAILED

OCT 0 1 2007

OFFICE OF PETITIONS

In re Patent No. 7,146,173	:	
Takeshi Ando	:	
Issue Date: December 5, 2006	:	DECISION ON
Application No. 10/124,330	:	REQUEST FOR RECONSIDERATION
Filed: April 18, 2002	:	OF
Atty Docket No. Q69681	:	PATENT TERM ADJUSTMENT

This is a decision on the "REQUEST FOR RECONSIDERATION OF PATENT TERM ADJUSTMENT UNDER 37 C.F.R. § 1.705(b)," filed February 5, 2007. This request is properly treated under § 1.705(d). Patentee requests that the revised patent term adjustment indicated on the patent be corrected from two hundred forty-three (243) days to at least three hundred forty-nine (349) days.

This decision is made in light of the "SUPPLEMENTAL REQUEST FOR RECONSIDERATION OF PATENT TERM ADJUSTMENT UNDER 37 C.F.R. § 1.705(b)" filed March 2, 2007. Therein, patentee requests, in the alternative, that the adjusted patent term be corrected to not less than three hundred thirty-five (335) days.

The request for reconsideration of the patent term adjustment under § 1.705(d) is **GRANTED to the extent indicated herein**.

The patent term adjustment indicated in the patent is to be corrected by issuance of a certificate of correction showing a revised Patent Term Adjustment of three hundred thirty-four **(334)** days.

Patentee is given TWO (2) MONTHS from the mail date of this decision to respond. No extensions of time will be granted under § 1.136.

On December 5, 2006, the above-identified application matured into U.S. Patent No. 7,146,173. The instant request for reconsideration filed February 5, 2007, was timely filed within 2 months of the date the patent issued. See § 1.705(d). The patent issued with a revised Patent Term Adjustment of 243 days. The PTA of 349 days was reduced by 106 days pursuant to 37 C.F.R. § 1.704(c)(10) for the submission of a request for refund after the mailing of the notice of allowance.

The reduction of 106 days is at issue. Petitioner contends that applicant did not engage in behavior that reasonably would be considered as failing in efforts to conclude prosecution of the application by filing a request for refund on August 22, 2006. Applicant submits that the request for refund was not made in response to a notice from the Office making a rejection, objection, argument or any other request, the criteria under 35 U.S.C. § 154(2)(C)(ii) for decreasing the applicant's patent term. Further, it is argued that applicant acted quickly and responsively to respond to an erroneous USPTO charge and should not be penalized when timely asking the USPTO to correct its error. Finally, applicant submits that the filing of a request for refund did not interfere with the patent issue process as the patent issued within four months of payment of the issue fee.

On supplemental request, patentee states that alternatively, if there is any reduction, the adjusted patent term should be reduced by fourteen (14) days, the difference between the date of the request for refund and the USPTO's response to that request. Patentee supplies a copy of their monthly deposit statement to show that the relevant $180 was refunded on September 5, 2006.

The reduction has been considered and a reduction is found to be warranted. It is undisputed that a request for refund was filed after the mailing of the Notice of Allowance. This was properly a basis for reduction of patent term adjustment pursuant to § 1.704(c)(10)(not § 1.704(b) as referenced by petitioner).

37 CFR § 1.704(c)(10) provides that:

> Submission of an amendment under § 1.312 or other paper after a notice of allowance has been given or mailed, in which case the period of adjustment set forth in § 1.703 shall be reduced by the lesser of:
>
> (i) The number of days, if any, beginning on the date the amendment under § 1.312 or other paper was filed and ending on the mailing date of the Office action or notice in response to the amendment under § 1.312 or such other paper;
>
> or
>
> (ii) Four months;

As stated in MPEP 2732:

> 37 CFR 1.704(c)(10) establishes submission of an amendment under 37 CFR 1.312 or other paper after a notice of allowance has been given or mailed as a circumstance that constitutes a failure of an applicant to engage in reasonable efforts to conclude processing or examination of an application. The submission of amendments (or other papers) after an application is allowed may cause substantial interference with the patent issue process.
>
> Certain papers filed after allowance are not considered to be a failure to engage in reasonable efforts to conclude processing or examination of an application. See *Clarification of 37 CFR 1.704(c)(10) - Reduction of Patent Term Adjustment for Certain Types of Papers Filed After a Notice of Allowance has been Mailed*, 1247 Off. Gaz. Pat. Office 111 (June 26, 2001). The submission of the following papers after a "Notice of Allowance" is not considered a failure to engage in reasonable efforts to conclude processing or examination of an application: (1) Fee(s) Transmittal (PTOL-85B); (2) Power of Attorney; (3) Power to Inspect; (4) Change of Address; (5) Change of Status (small/not small entity status); (6) a response to the examiner's reasons for allowance or a request to correct an error or omission in the "Notice of Allowance" or "Notice of Allowability;" and (7) letters related to government interests (e.g., those between NASA and the

> Office). Papers that will be considered a failure to engage in reasonable efforts to conclude processing or examination of an application include: (1) a request for a refund; (2) a status letter; (3) amendments under 37 CFR 1.312; (4) late priority claims; (5) a certified copy of a priority document; (6) drawings; (7) letters related to biologic deposits; and (8) oaths or declarations.

A request for a refund is clearly stated as a failure to engage. It is undisputed that such a request was filed. The fact that the patent issued within four months of the payment of the issue fee does not negate the fact that applicant by definition both failed to engage in reasonable efforts to conclude examination and interfered with the patent issuance process by filing a request for refund. In the future, patentee may want to consider filing a request for refund of the type filed, which is timely filed if filed within 2 years, after the issuance of the patent. It is noted that in this instance, the relevant $180 charge was made on May 6, 2005, but applicant did not file a request for refund until August 22, 2006. Applicant could have avoided entry of a period of reduction by either promptly filing the request for refund with their response filed on September 15, 2005 (before the mailing of the notice of allowance on July 28, 2006) or after issuance of the patent on December 5, 2006.

Nonetheless, patentee is correct that the period of reduction of 106 days is not warranted. Under the circumstances, the period of reduction is properly calculated as fifteen (15) days, counting the number of days in the period beginning on the date the request for refund was filed, August 22, 2006 and ending on September 5, 2006. The period is calculated as 15 days not 14 days because it is beginning on August 22, 2006. As stated in MPEP 2731:

> When a period is indicated (in 37 CFR 1.703 or 1.704) as "beginning" on a particular day, that day is included in the period, in that such day is "day one" of the period and not "day zero." For example, a period beginning on April 1 and ending on April 10 is ten (and not nine) days in length. 35 U.S.C. 154(b)(1)(A) and (B) provide for an adjustment of one day for each day after the end of the period set forth in 35 U.S.C. 154(b)(1)(A)(i), (ii), (iii), (iv), and (B) until the prescribed action is taken, whereas 35 U.S.C. 154(b)(1)(C) provides for an adjustment of

one day for each day of the pendency of the proceeding, order, or review prescribed in 35 U.S.C. 154(b)(1)(C)(i) through (iii). Therefore, the end of the period set forth in 37 CFR 1.703(a) and 1.703(b) (which correspond to 35 U.S.C. 154(b)(1)(A) and (B)) is "day zero" (not "day one") as to the period of adjustment, whereas the first day of the proceeding, order, or review set forth in 37 CFR 1.703(c), 1.703(d), and 1.703(e)(which correspond to 35 U.S.C. 154(b)(1)(C)(i) through (iii)) is "day one" of the period of adjustment.

In view thereof, it is concluded that the patent should have issued with a revised Patent Term Adjustment of three hundred thirty-four (334) days.

Receipt is acknowledged of the $200.00 fee set forth in 37 CFR 1.18(e). No additional fees are required.

The application file is being forwarded to the Certificates of Correction Branch for issuance of a certificate of correction in order to rectify this error. The Office will issue a certificate of correction indicating that the term of the above-identified patent is extended or adjusted by three hundred thirty-four **(334)** days.

Telephone inquiries specific to this matter should be directed to the undersigned at (571) 272-3219.

Nancy Johnson
Senior Petitions Attorney
Office of Petitions

Enclosure: Copy of DRAFT Certificate of Correction

UNITED STATES PATENT AND TRADEMARK OFFICE

CERTIFICATE OF CORRECTION

PATENT : 7,146,173 B2

DATED : December 5, 2006

INVENTOR(S) : Ando

DRAFT

It is certified that error appears in the above-identified patent and that said Letters Patent is hereby corrected as shown below:

On the cover page,

[*] Notice: Subject to any disclaimer, the term of this patent is extended or adjusted under 35 USC 154(b) by (243) days

Delete the phrase "by 243" and insert – by 334 days--

SPE RESPONSE FOR CERTIFICATE OF CORRECTION

Paper No.: _____

DATE : November 14, 2005

TO SPE OF : ART UNIT 3754

SUBJECT : Request for Certificate of Correction on Patent No.: 6,845,965

A response is requested with respect to the accompanying request for a certificate of correction.

Please complete this form and return with file, within **7** days to:
Palm location **7580, Certificates of Correction Branch – South Tower – 9A22**
If response is for an IFW, **return to employee (named below) via PUBSCofC Team in MADRAS.**
With respect to the change(s) requested, correcting Office and/or Applicant's errors, should the patent read as shown in the certificate of correction (COCIN)? No new matter should be introduced, nor should the scope or meaning of the claims be changed.

Magdalene Talley

Thank You For Your Assistance

Certificates of Correction Branch
Tel. No. 703-308-9309 ext. 116

The request for issuing the above-identified correction(s) is hereby:
Note your decision on the appropriate box.

- ☒ **Approved** — All changes apply.
- ☐ **Approved in Part** — Specify below which changes **do not** apply.
- ☐ **Denied** — State the reasons for denial below.

Comments:

The typo in assignee name is the Office's fault. The indentations in the claims is not the office's fault, but it does not change the scope of the claims. Charge the deposit acct. because the formatting is a result of applicant's amendment of 6-14-2004. I'd call this a C of C of applicant's mistake

Michael Y Mar
SPE

3754
Art Unit

PTOL-306 (REV. 7/03)

U.S. DEPARTMENT OF COMMERCE Patent and Trademark Office

PTO/SB/44 (04-05)
Approved for use through 04/30/2007. OMB 0651-0033
U.S. Patent and Trademark Office; U.S. DEPARTMENT OF COMMERCE
Under the Paperwork Reduction Act of 1995, no persons are required to respond to a collection of information unless it displays a valid OMB control number.
(Also Form PTO-1050)

UNITED STATES PATENT AND TRADEMARK OFFICE
CERTIFICATE OF CORRECTION

PATENT NO. : 6,845,965 B2

APPLICATION NO.: 10/124,404

ISSUE DATE : 01/25/2005

INVENTOR(S) : Henry A. Lanting and Po P. Woo

It is certified that an error appears or errors appear in the above-identified patent and that said Letters Patent is hereby corrected as shown below:

In the Assignee name, replace "GPI" with - - GFI - -.

At Column 9, line 10, Claim 1 is replaced with the following:

--1. A valve for controlling a fluid, the fluid exerting a fluid pressure, the valve comprising:

a body, the body including:

a fluid passage;

a valve seat defining an orifice, and including:

a sealing gland including a support surface, the support surface including a notch;

a resilient valve seat member disposed within the sealing gland;

a valve sealing member disposed within the fluid passage and configured to seat against the valve seat member to effect sealing of the valve sealing member to the valve seat and thereby close the orifice;

the notch being configured to facilitate the application of the fluid pressure on the valve seat member to prevent leakage through the orifice and between the valve sealing member and the sealing gland when the valve sealing member is seated against the valve seat member;

the valve seat member including:

a first pressure responsive surface, exposed to the fluid passage, and including a valve engaging surface portion, wherein the valve engaging surface portion is configured to engage the valve sealing member to effect sealing of the valve sealing member to the valve seat;

a second pressure responsive surface configured to receive the application of the fluid pressure;

the notch being positioned to face the second pressure responsive surface; and

the notch being configured to facilitate the application of the fluid pressure on the second pressure responsive surface to counterbalance applications of forces on the first pressure responsive surface. --

MAILING ADDRESS OF SENDER (Please do not use customer number below):

This collection of information is required by 37 CFR 1.322, 1.323, and 1.324. The information is required to obtain or retain a benefit by the public which is to file (and by the USPTO to process) an application. Confidentiality is governed by 35 U.S.C. 122 and 37 CFR 1.14. This collection is estimated to take 1.0 hour to complete, including gathering, preparing, and submitting the completed application form to the USPTO. Time will vary depending upon the individual case. Any comments on the amount of time you require to complete this form and/or suggestions for reducing this burden, should be sent to the Chief Information Officer, U.S. Patent and Trademark Office, U.S. Department of Commerce, P.O. Box 1450, Alexandria, VA 22313-1450. DO NOT SEND FEES OR COMPLETED FORMS TO THIS ADDRESS. SEND TO: Attention Certificate of Corrections Branch, Commissioner for Patents, P.O. Box 1450, Alexandria, VA 22313-1450.

If you need assistance in completing the form, call 1-800-PTO-9199 and select option 2.

OCT 31 2006

PTO/SB/44 (04-05)
Approved for use through 04/30/2007. OMB 0651-0033
U.S. Patent and Trademark Office; U.S. DEPARTMENT OF COMMERCE
Under the Paperwork Reduction Act of 1995, no persons are required to respond to a collection of information unless it displays a valid OMB control number.
(Also Form PTO-1050)

UNITED STATES PATENT AND TRADEMARK OFFICE
CERTIFICATE OF CORRECTION

PATENT NO. : 6,845,965 B2

APPLICATION NO.: 10/124,404

ISSUE DATE : 01/25/2005

INVENTOR(S) : Henry A. Lanting and Po P. Woo

It is certified that an error appears or errors appear in the above-identified patent and that said Letters Patent is hereby corrected as shown below:

At Column 10, line 1, Claim 10 is replaced with the following:

--10. A valve for controlling a fluid, the fluid exerting a fluid pressure, the valve comprising:
a body, the body including:
a fluid passage;
a valve seat defining an orifice, including:
a sealing gland;
a resilient valve seat member disposed within the sealing gland, and including a notch;
a valve sealing member disposed within the fluid passage and configured to seat against the valve seat member to effect sealing of the valve sealing member to the valve seat and thereby close the orifice;
the notch being configured to facilitate the application of the fluid pressure on the valve seat member to prevent leakage through the orifice and between the valve sealing member and the sealing gland when the valve sealing member is seated against the valve seat member;
the valve seat member including:
a first pressure responsive surface, exposed to the fluid passage, and including a valve engaging surface portion, wherein the valve engaging surface portion is configured to engage the valve sealing member to effect sealing of the valve sealing member to the valve seat; and
a second pressure responsive surface configured to receive the application of the fluid pressure;
wherein the notch is configured to facilitate the application of the fluid pressure on the second pressure responsive surface to maintain engagement of the valve seat member to the sealing gland upstream of the valve engaging surface. --

MAILING ADDRESS OF SENDER (Please do not use customer number below):

This collection of information is required by 37 CFR 1.322, 1.323, and 1.324. The information is required to obtain or retain a benefit by the public which is to file (and by the USPTO to process) an application. Confidentiality is governed by 35 U.S.C. 122 and 37 CFR 1.14. This collection is estimated to take 1.0 hour to complete, including gathering, preparing, and submitting the completed application form to the USPTO. Time will vary depending upon the individual case. Any comments on the amount of time you require to complete this form and/or suggestions for reducing this burden, should be sent to the Chief Information Officer, U.S. Patent and Trademark Office, U.S. Department of Commerce, P.O. Box 1450, Alexandria, VA 22313-1450. DO NOT SEND FEES OR COMPLETED FORMS TO THIS ADDRESS. SEND TO: **Attention Certificate of Corrections Branch, Commissioner for Patents, P.O. Box 1450, Alexandria, VA 22313-1450.**

If you need assistance in completing the form, call 1-800-PTO-9199 and select option 2.

OCT 3 1 2005

PTO/SB/44 (04-05)
Approved for use through 04/30/2007. OMB 0651-0033
U.S. Patent and Trademark Office; U.S. DEPARTMENT OF COMMERCE
Under the Paperwork Reduction Act of 1995, no persons are required to respond to a collection of information unless it displays a valid OMB control number.
(Also Form PTO-1050)

UNITED STATES PATENT AND TRADEMARK OFFICE
CERTIFICATE OF CORRECTION

PATENT NO. : 6,845,965 B2

APPLICATION NO.: 10/124,404

ISSUE DATE : 01/25/2005

INVENTOR(S) : Henry A. Lanting and Po P. Woo

It is certified that an error appears or errors appear in the above-identified patent and that said Letters Patent is hereby corrected as shown below:

At Column 11, line 1, Claim 21 is replaced with the following:

–21. A valve for controlling a fluid, the fluid exerting a fluid pressure, the valve comprising:
a body, the body including:
a fluid passage;
a valve seat defining an orifice, including:
a sealing gland including a cavity;
a resilient valve seat member disposed within the sealing gland;
a valve sealing member disposed within the fluid passage and configured to seat against the valve seat member to effect sealing of the valve sealing member to the valve seat and thereby close the orifice;
the sealing gland including at least two spaced apart apertures, configured to distribute fluid pressure within the cavity to act upon the valve seat member to prevent leakage through the orifice when the valve sealing member is seated against the valve seat member; and
said at least two spaced apart apertures being configured to facilitate the application of the distributed fluid pressure on the valve seat member to prevent leakage through the orifice and between the valve sealing member and the sealing gland when the valve sealing member is seated against the valve seat member. –

MAILING ADDRESS OF SENDER (Please do not use customer number below):
Valentine A. Cottrill
Gowling Lafleur Henderson LLP
50 Queen Street North, Suite 1020
Kitchener, Ontario N2H 6M2 CANADA

This collection of information is required by 37 CFR 1.322, 1.323, and 1.324. The information is required to obtain or retain a benefit by the public which is to file (and by the USPTO to process) an application. Confidentiality is governed by 35 U.S.C. 122 and 37 CFR 1.14. This collection is estimated to take 1.0 hour to complete, including gathering, preparing, and submitting the completed application form to the USPTO. Time will vary depending upon the individual case. Any comments on the amount of time you require to complete this form and/or suggestions for reducing this burden, should be sent to the Chief Information Officer, U.S. Patent and Trademark Office, U.S. Department of Commerce, P.O. Box 1450, Alexandria, VA 22313-1450. DO NOT SEND FEES OR COMPLETED FORMS TO THIS ADDRESS. SEND TO: **Attention Certificate of Corrections Branch, Commissioner for Patents, P.O. Box 1450, Alexandria, VA 22313-1450.**

If you need assistance in completing the form, call 1-800-PTO-9199 and select option 2.

OCT 31 2005

SPE RESPONSE FOR CERTIFICATE OF CORRECTION

Paper No.: _____

DATE : 8-17-07

TO SPE OF : ART UNIT 4700

SUBJECT : Request for Certificate of Correction for Appl. No. 6259817 (10/124434

Please respond to this request for a certificate of correction within 7 days.

Please review the requested changes/corrections as shown in the **COCIN** document(s) in the IFW application image. No new matter should be introduced, nor should the scope or meaning of the claims be changed.

Please complete the response (see below) and forward the completed response to scanning using document code **COCX**.

Term Pat. Adjustment A/S/A/P. 2 time

E M James
Certificates of Correction Branch
703-308-9390 ext. 116

Thank You For Your Assistance

The request for issuing the above-identified correction(s) is hereby:
Note your decision on the appropriate box.

- ☐ **Approved** — **All** changes apply.
- ☐ **Approved in Part** — Specify below which changes **do not** apply.
- ☑ **Denied** — State the reasons for denial below.

Comments: The ~~tem~~ PTA correctly appears on the face of the patent but it is also 0 days, so it is moot.

Mark Polath
SPE OPLA

Art Unit

US006759817B2

(12) **United States Patent**
Mersch

(10) **Patent No.: US 6,759,817 B2**
(45) **Date of Patent: Jul. 6, 2004**

(54) **WINDOW LIFTER SYSTEM AND METHOD OF CONTROLLING A PLURALITY OF WINDOW LIFTERS**

(75) Inventor: **Gerhard Mersch**, Uetze (DE)

(73) Assignee: **ArvinMeritor GmbH** (DE)

(*) Notice: Subject to any disclaimer, the term of this patent is extended or adjusted under 35 U.S.C. 154(b) by 0 days.

(21) Appl. No.: **10/124,434**

(22) Filed: **Apr. 17, 2002**

(65) **Prior Publication Data**

US 2002/0171384 A1 Nov. 21, 2002

(30) **Foreign Application Priority Data**

Apr. 18, 2001 (DE) 101 18 982

(51) **Int. Cl.**[7] **H02P 7/74**

(52) **U.S. Cl.** **318/34**; 318/596; 318/599; 318/684

(58) **Field of Search** 318/599, 596, 318/684, 34

(56) **References Cited**

U.S. PATENT DOCUMENTS

4,328,451 A * 5/1982 Barge 318/596
5,329,525 A * 7/1994 Sakagami 370/389
5,577,043 A * 11/1996 Guo et al. 370/449
6,404,158 B1 * 6/2002 Boisvert et al. 318/469
6,431,153 B2 * 8/2002 Ganser et al. 123/480
6,515,377 B1 * 2/2003 Ubelein et al. 307/10.1
6,560,511 B1 * 5/2003 Yokoo et al. 700/245

FOREIGN PATENT DOCUMENTS

DE 199 34 880 1/2001
JP 0511795 A1 * 4/1992
JP 06351067 A * 10/1993 ..... B60J/1/17
JP 06351067 12/1994

* cited by examiner

Primary Examiner—Rita Leykin
(74) *Attorney, Agent, or Firm*—Carlson, Gaskey & Olds

(57) **ABSTRACT**

A window lifter system comprises a first window lifter motor and a master control device for the first window lifter motor. The master control device is able to detect a position of a window pane driven by the first window lifter motor and to drive the first window lifter motor at a variable speed. The system further comprises at least one second window lifter motor and a slave control device for the second window lifter motor. The slave control device is able to detect a position of a window pane driven by the second window lifter motor and to drive the second window lifter motor at a variable speed. A bus system is provided by means of which the master and slave control devices are able to communicate with each other. There is also proposed a method of controlling such a window lifter system.

17 Claims, 4 Drawing Sheets

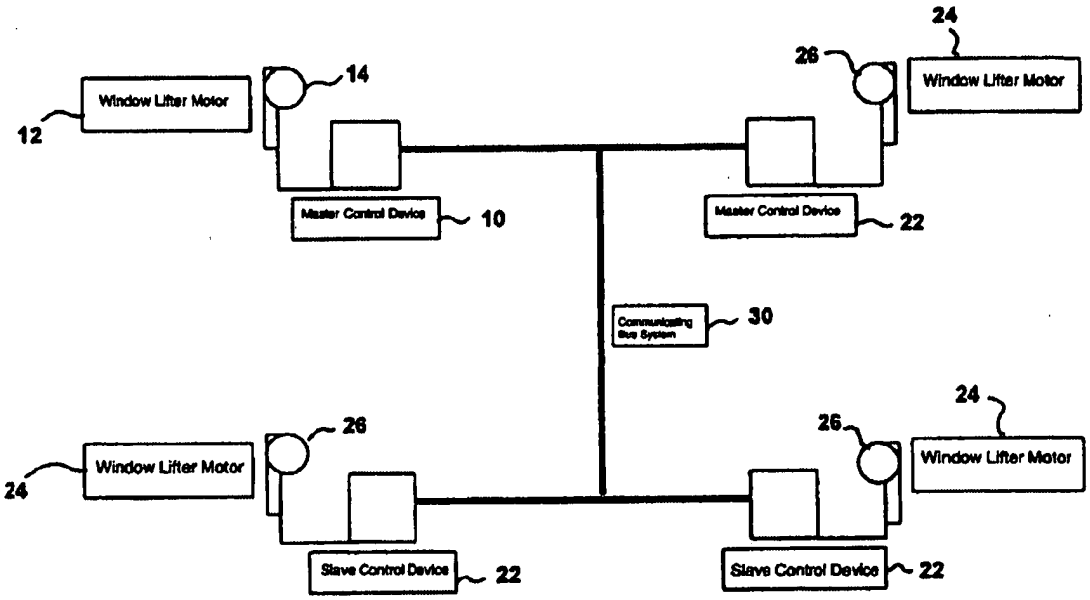

PTO/SB/44 (07-03)
Approved for use through 01/31/2004. OMB 0651-0033
U.S. Patent and Trademark Office; U.S. DEPARTMENT OF COMMERCE
Under the Paperwork Reduction Act of 1995, no persons are required to respond to a collection of information unless it displays a valid OMB control number.
(Also Form PTO-1050)

UNITED STATES PATENT AND TRADEMARK OFFICE
CERTIFICATE OF CORRECTION

PATENT NO. : 6,759,817 B2
APPL. NO. : 10/734,434
DATED : July 6, 2004
INVENTOR(S) : Mersch

It is certified that error appears in the above-identified patent and that said Letters Patent is hereby corrected as shown below:

ON THE COVER PAGE:

In the section titled, "Notice" of the issued patent, it should read as follows:

[*] Notice: Subject to any disclaimer, the term of this patent is extended or adjusted under 35 U.S.C. 154(b) by 0 days.

MAILING ADDRESS OF SENDER:

PATENT NO. *6,759,817*

Carlson, Gaskey & Olds, P.C.
400 West Maple Road, Suite 350
Birmingham, Michigan 48009
(248) 988-8360

No. of additional copies

This collection of information is required by 37 CFR 1.322, 1.323, and 1.324. The information is required to obtain or retain a benefit by the public which is to file (and by the USPTO to process) an application. Confidentiality is governed by 35 U.S.C. 122 and 37 CFR 1.14. This collection is estimated to take 1.0 hour to complete, including gathering, preparing, and submitting the completed application form to the USPTO. Time will vary depending upon the individual case. Any comments on the amount of time you require to complete this form and/or suggestions for reducing this burden, should be sent to the Chief Information Officer, U.S. Patent and Trademark Office, U.S. Department of Commerce, P.O. Box 1450, Alexandria, VA 22313-1450. DO NOT SEND FEES OR COMPLETED FORMS TO THIS ADDRESS. **SEND TO: Attention Certificate of Corrections Branch, Commissioner for Patents, P.O. Box 1450, Alexandria, VA 22313-1450.**

If you need assistance in completing the form, call 1-800-PTO-9199 and select option 2.

Best Available Copy

19 JUL 2004

OIPE JC139
JUN 2 1 2004
PATENT & TRADEMARK OFFICE

Docket No.: 222171US-2
Date Allowed: 04/27/04

OBLON
SPIVAK
McCLELLAND
MAIER
&
NEUSTADT
P.C.

ATTORNEYS AT LAW

GREGORY J. MAIER
(703) 413-3000
GMAIER@OBLON.COM

RAYMOND F. CARDILLO, JR.
(703) 413-3000
RCARDILLO@OBLON.COM

COMMISSIONER FOR PATENTS
ALEXANDRIA, VIRGINIA 22313

Re: Group Art Unit: 2852
Serial No.: 10/124.461
Filed: APRIL 18, 2002
Applicant: YOSHIAKI MIYASHITA
For: IMAGE FORMING APPARATUS FOR ADJUSTING PREDETERMINED DEVELOPER DENSITY VALUES...

SIR:

Attached hereto for filing are the following papers:

PETITION UNDER 37 CFR §1.181(a)(3)
COPY OF FILED IDS FILED 08/22/03

Our check in the amount of **$ -0-** is attached covering any required fees. In the event any variance exists between the amount enclosed and the Patent Office charges for filing the above-noted documents, including any fees required under 37 C.F.R. 1.136 for any necessary Extension of Time to make the filing of the attached documents timely, please charge or credit the difference to our Deposit Account No. 15-0030. Further, if these papers are not considered timely filed, then a petition is hereby made under 37 C.F.R. 1.136 for the necessary extension of time. A duplicate of this sheet is enclosed.

Respectfully submitted,

OBLON, SPIVAK, McCLELLAND
MAIER & NEUSTADT, P.C.

Gregory J. Maier
Registration No. 25,599
Attorney of Record
Raymond F. Cardillo, Jr.
Registration No. 40,440

Customer Number
22850
Tel. No. (703) 413-3000
Fax No. (703) 413-2220
GJM/RFC/jmp

COPY

DOCKET NO.: 222171US-2

OIPE JC139
JUN 2 1 2004
PATENT & TRADEMARK OFFICE

IN THE UNITED STATES PATENT & TRADEMARK OFFICE

IN RE APPLICATION OF	: DATE ALLOWED: 04/27/04
YOSHIAKI MIYASHITA	: EXAMINER: GRAINGER, Q.M.
SERIAL NO: 10/124,461	:
FILED: APRIL 18, 2002	: GROUP ART UNIT: 2852
FOR: IMAGE FORMING APPARATUS FOR ADJUSTING PREDETERMINED DEVELOPER DENSITY VALUES...	:

PETITION UNDER 37 CFR §1.181(a)(3)

COMMISSIONER FOR PATENTS
Alexandria, Virginia 22313

SIR:

This is a Petition pursuant to 37 CFR §1.181(a)(3) requesting that the examiner be provided the Application file in order to supply Applicants a copy of the below noted Form PTO-1449 that indicates consideration of the references listed thereon.

STATEMENT OF FACTS

On August 22, 2003, Information Disclosure Statement (IDS) papers were filed that included a Form PTO-1449 listing four references for consideration as documented by the attached copy of these IDS papers including the Form PTO-1449 and the associated date-stamped mail room filing receipt.

COPY

Upon review of this Application after the allowance thereof, it was noted that there was no indication of receipt or consideration of the Form PTO 1449 listed four references.

ACTION REQUESTED

It is respectfully requested that the Examiner be supplied with the application file so that he can provide Applicant a copy of the above-noted Form PTO-1449 indicating proper consideration of the listed four references.

Respectfully submitted,

OBLON, SPIVAK, McCLELLAND,
MAIER & NEUSTADT, P.C.

Gregory J. Maier
Registration No. 25,599
Attorney of Record
Raymond F. Cardillo
Registration No. 40,440

Customer Number

22850

(703) 413-3000
(703) 413-2220 (fax)
GJM:RFC/jmp

COPY

OIPE JC139
JUN 2 1 2004
PATENT & TRADEMARK OFFICE

BEST AVAILABLE COPY

IWE

Dept.: PP

OSMM&N File No. 222171US2

By: MJS/phh

Serial No. 10/124,461

In the matter of the Application of: Yoshiaki MIYASHITA

For: IMAGE FORMING APPARATUS

Due Date: 08/28/2003

The following has been received in the U.S. Patent Office on the date stamped hereon:

- Dep. Acct. Order Form
- Information Disclosure Statement
- PTO-1449
- Cited References (4)
- Search Report EUROPEAN

OIPE JC
AUG 2 2 2003
PATENT & TRADEMARK OFFICE

Docket No. 222171US2/phh

OIPE JC135
JUN 2 1 2004
PATENT & TRADEMARK OFFICE

IN THE UNITED STATES PATENT AND TRADEMARK OFFICE

IN RE APPLICATION OF: Yoshiaki MIYASHITA

SERIAL NO: 10/124,461 GAU: 2852

FILED: April 18, 2002 EXAMINER:

FOR: IMAGE FORMING APPARATUS

INFORMATION DISCLOSURE STATEMENT UNDER 37 CFR 1.97

COMMISSIONER FOR PATENTS
ALEXANDRIA, VIRGINIA 22313

BEST AVAILABLE COPY

SIR:
Applicant(s) wish to disclose the following information.

REFERENCES

■ The applicant(s) wish to make of record the references cited in the attached European Search Report listed on the attached form PTO-1449. Copies of the listed references are attached, where required, as are either statements of relevancy or any readily available English translations of pertinent portions of any non-English language references.

☐ A check is attached in the amount required under 37 CFR §1.17(p).

RELATED CASES

☐ Attached is a list of applicant's pending application(s) or issued patent(s) which may be related to the present application. A copy of the patent(s), together with a copy of the claims and drawings of the pending application(s) is attached along with PTO 1449.

☐ A check is attached in the amount required under 37 CFR §1.17(p).

CERTIFICATION

■ Each item of information contained in this information disclosure statement was first cited in a communication from a foreign patent office in a counterpart foreign application not more than three months prior to the filing of this statement.

☐ No item of information contained in this information disclosure statement was cited in a communication from a foreign patent office in a counterpart foreign application or, to the knowledge of the undersigned, having made reasonable inquiry, was known to any individual designated in 37 CFR §1.56(c) more than three months prior to the filing of this statement.

DEPOSIT ACCOUNT

■ Please charge any additional fees for the papers being filed herewith and for which no check or credit card payment form is enclosed herewith, or credit any overpayment to deposit account number 15-0030. A duplicate copy of this sheet is enclosed.

Respectfully submitted,

OBLON, SPIVAK, McCLELLAND,
MAIER & NEUSTADT, P.C.

Marvin J. Spivak
Registration No. 24,913

22850

Tel. (703) 413-3000
Fax. (703) 413-2220
(OSMMN 05/03)

BEST AVAILABLE COPY

Form PTO 1449 (Modified)

U.S. DEPARTMENT OF COMMERCE
PATENT AND TRADEMARK OFFICE

LIST OF REFERENCES CITED BY APPLICANT

OIPE JC68
JUN 2 1 2004
PATENT & TRADEMARK OFFICE

ATTY DOCKET NO.	SERIAL NO.
222171US2	10/124,461
APPLICANT	
Yoshiaki MIYASHITA	
FILING DATE	GROUP
April 18, 2002	2852

U.S. PATENT DOCUMENTS

EXAMINER INITIAL		DOCUMENT NUMBER	DATE	NAME	CLASS	SUB CLASS	FILING DATE IF APPROPRIATE
	AA	6,055,011	04/25/2000	K. NISHIMURA			
	AB	5,873,011	02/16/99	S. TAKEMOTO, et al.			
	AC	5,198,852	03/30/93	T. MIKAMI			
	AD						
	AE						
	AF						
	AG						
	AH						
	AI						
	AJ						
	AK						
	AL						
	AM						
	AN						

FOREIGN PATENT DOCUMENTS

		DOCUMENT NUMBER	DATE	COUNTRY	TRANSLATION YES	TRANSLATION NO
	AO					
	AP					
	AQ					
	AR					
	AS					
	AT					
	AU					
	AV					

OTHER REFERENCES (Including Author, Title, Date, Pertinent Pages, etc.)

	AW	Patent Abstracts of Japan, JP 04-101170, April 2, 1992
	AX	
	AY	
	AZ	

☐ Additional References sheet(s) attached

Examiner

Date Considered

*Examiner: Initial if reference is considered, whether or not citation is in conformance with MPEP 609; Draw line through citation if not in conformance and not considered. Include copy of this form with next communication to applicant.

OIPE JC139
JUN 2 1 2004
PATENT & TRADEMARK OFFICE

Dept.: E/M

OSMM&N File No. 222171US2

By: GJM/RFC/jmp

Serial No. 10/124,461

In the matter of the Application of: Yoshiaki MIYASHITA

For: IMAGE FORMING APPARATUS FOR ADJUSTING PREDETERMINED DEVELOPER DENSITY VALUES...

Due Date: N/A

The following has been received in the U.S. Patent Office on the date stamped hereon:

- Dep. Acct. Order Form
- Cover Letter
- Petition under 37 CFR 1.181(a)(3)
- Copy of Filed IDS filed 08/22/03

OIPE JC174
MAY 2 8 2004
PATENT & TRADEMARK OFFICE

BEST AVAILABLE COPY

JMJ

[redacted]

COPY

UNITED STATES PATENT AND TRADEMARK OFFICE

Commissioner for Patents
United States Patent and Trademark Office
P.O. Box 1450
Alexandria, VA 22313-1450
www.uspto.gov

Patent No. : 7,449,914 B2
Serial No. : 10/124,462
Inventor(s) : Jacoben
Issued : October 21, 2008
Title : **METHOD AND APPARATUS FOR FULLY INSURING LARGE BANK DEPOSITS**
Docket No. : **10837-3US**

Re: Request for Reconsideration

Consideration has been given your request for the issuance of a certificate of correction for the above-identified patent under the provisions of 37 CFR 1.322 and/or 1.323.

A petition under 37 CFR 3.81 must be filed and granted to fulfill your request, to date, there is no petition on record to consider your request to add Assignee.

Furthermore, Assignees' and/ or Co-assignees' names and addresses (assignment data) printed in a patent are based *solely* on information supplied in the appropriate space for identifying the assignment data, i.e., item 3 of the Fee(s) Transmittal Form PTOL-85B. After payment of the issue fee, correction of assignment data submitted on the PTOL-85B can only be done by Certificate of Correction under 37 CFR 1.323, which requires petition under 37 CFR 3.81(b).

A request for a patent to be corrected to state the name of the assignee must:

A. state that the assignment was submitted for recordation as set forth in 37 CFR 3.11 before issuance of the patent;
B. include a request for a certificate of correction under 37 CFR 1.323 along with the fee set forth in 37 CFR 1.20(a); and
C. include the processing fee set forth in 37 CFR 1.17(i).

If the request is granted, Certificates of Correction Branch will be notified that a Certificate of Correction may be issued.

See Manual of Patent Examining Procedure, Section 1481.01 (Rev. 3) (Oct. 2005).

Applicant has not included items B and or C above, accordingly, the request for Certificate of Correction to add or change the assignee data is dismissed.
Any request under 37 CFR 3.81(b) should be directed to the following address or facsimile number:

By mail: Mail Stop PETITIONS
Commissioner for Patents
Post Office Box 1450
Alexandria, VA 22313-1450

By hand: Customer Service Window
Mail Stop Petitions
Randolph Building
401 Dulany Street
Alexandria, VA 22314

By fax: 571-273-8300 ATTN: Office of Petitions

If, the petition under 37 CFR 1.182 (required fee currently $130), is filed and granted, the patentee would be entitled to a certificate of correction under 37 CFR 1.323 (required fee currently $100), which has been received.

Ernest C. White, *LIE*
For Mary F. Diggs (703) 308-9390 x 125
Decisions & Certificates
of Correction Branch
(703) **308-9390 x 122**

PANITCH SCHWARZE BELISARIO & NADEL LLP
ONE COMMERCE SQUARE
2005 MARKET STREET, SUITE 2200
PHILADELPHIA PA 19103

ecw

EW

RECEIVED
CENTRAL FAX CENTER
JUL 0 7 2009

PANITCH SCHWARZE BELISARIO & NADEL LLP

CERTIFICATE OF FACSIMILE TRANSMISSION UNDER 37 CFR 1.8

July 7, 2009

I hereby certify that this paper is being facsimile transmitted to the U.S. Patent and Trademark Office on the date shown below.

Signature: Donna Marks

Name of Person Signing Certificate: Donna Marks

Date July 7, 2009

To	Company	Fax	Phone
Office of Petitions	Attn: Ernest C. White/Mary F. Diggs	571.273.8300	

From: Clark A. Jablon, Esq.

Total Pages: 6

Direct Dial: 215.965.1293

Re: U.S. Patent No. 7,440,914/Application No. 10/124,462
Attorney Docket No.: 10837-3US

Title of Paper(s) being sent
1. Petition Under 37 CFR § 3.81
2. 2nd Request for Certificate of Correction of Patent for Applicant's Mistake
3. Certificate of Correction

Message: Please process these papers immediately.

The information contained in this facsimile message is attorney-client privileged and confidential, and is intended only for the use of the individual or entity named above. If the reader of this message is not the intended recipient, or the employee or agent responsible to deliver it to the intended recipient, you are hereby notified that any dissemination, distribution or copying of this communication is strictly prohibited. If you have received this communication in error, please notify us immediately by telephone, and return the original message to us by mail at the address below.

One Commerce Square / 2005 Market Street, Suite 2200 / Philadelphia, Pennsylvania 19103-7013 / 215.965.1330 / fax: 215.965.1331 / www.panitchlaw.com

143062 v1

RECEIVED
CENTRAL FAX CENTER
JUL 0 7 2009

IN THE UNITED STATES PATENT AND TRADEMARK OFFICE

In re:	Patent Application of Mark P. Jacobsen	
Patent No.:	7,440,914 B2	Issued: October 21, 2008
Appln. No.:	10/124,462	Filing Date: April 17, 2002
For:	METHOD AND APPARATUS FOR FULLY INSURING LARGE BANK DEPOSITS	Attorney Docket No. 10837-3US

PETITION UNDER 37 C.F.R. § 3.81

This Petition is being filed in response to the Communication received July 1, 2009 from the U.S. Patent and Trademark Office in connection with a Request for Certificate of Correction filed by Patentee on June 18, 2009. The Communication states that items (B) and (C) below were not included in the originally filed Request for Certificate of Correction, and thus the correction request was dismissed.

In response, patentee submits herewith items (B)[1] and (C) and requests that a Certificate of Correction be issued to correct the name of the assignee on the issued patent. Patentee states as follows:

(A) The assignment as recorded on February 3, 2003 at Reel 013713, Frame 0095 reflects the correct assignee. The assignment was submitted for recordation as set forth in 37 C.F.R. § 3.11 before issuance of the patent.

(B) A Request for Certificate of Correction under 37 CFR 1.323 is attached. The fee under 37 CFR 1.20(a) of **$100.00** was submitted with the Request for Certificate of Correction filed on June 18, 2009.

(C) The fee required by 37 CFR 1.17(i) of **$130.00** is being paid as follows:

[X] Authorization is hereby made to charge to Deposit Account No. 50-1017 (Billing No. 080934.0002).

[X] Charge any additional fees required by this paper or credit any overpayment in the above deposit account.

[1] Item (B) was submitted with the original request.

07/08/2009 PSOUVANN 00000033 501017 10124462
01 FC:1464 130.00 DA

PAGE 2/6 * RCVD AT 7/7/2009 4:26:10 PM [Eastern Daylight Time] * SVR:USPTO-EFXRF-5/33 * DNIS:2738300 * CSID:sent from 2159651331 * DURATION (mm-ss):01-54

It is respectfully requested that this Petition be granted and a Certificate of Correction be issued.

Respectfully submitted,

By:

July 7, 2009
(Date)

Clark Jablon

CLARK A. JABLON
Registration No. 35,039
PANITCH SCHWARZE BELISARIO & NADEL LLP
One Commerce Square
2005 Market Street, Suite 2200
Philadelphia, PA 19103-7013
Telephone: 215.965.1330
Direct Dial: 215.965.1293
Facsimile: 215.965.1331
E-Mail: cjablon@panitchlaw.com

CAJ/DCM
Enclosures

143032 v1

PAGE 3/6 * RCVD AT 7/7/2009 4:26:10 PM [Eastern Daylight Time] * SVR:USPTO-EFXRF-5/33 * DNIS:2738300 * CSID:sent from 2159651331 * DURATION (mm-ss):01-54

RECEIVED
CENTRAL FAX CENTER
JUL 0 7 2009

IN THE UNITED STATES PATENT AND TRADEMARK OFFICE

In re:	Patent Application of Mark P. Jacobsen	:
Patent No.:	7,440,914 B2	: Issued: October 21, 2008
Appln. No.:	10/124,462	: Filing Date: April 17, 2002
For:	METHOD AND APPARATUS FOR FULLY INSURING LARGE BANK DEPOSITS	: Attorney Docket No. 10837-3US

2nd REQUEST FOR CERTIFICATE OF CORRECTION OF PATENT FOR APPLICANT'S MISTAKE (37 C.F.R. § 1.323)

This 2nd Request for Certificate of Correction is filed in response to the Communication received from the U.S. Patent and Trademark Office on July 1, 2009.

Attached is PTO/SB/44 (also Form PTO-1050) in connection with the above issued patent.

The assignee information on the issued patent contains a typographical error due to Applicant's error. The name of the assignee is Promontory Interfinancial Network, LLC and not Promontory Interfinancial Networks, LLC. Applicant inadvertently typed the incorrect name on the issue fee transmittal form PTOL-85B. The assignment as recorded on February 3, 2003 at Reel 013713, Frame 0095 reflects the correct assignee.

Correction of the above-identified mistake does not involve changes in the patent as would constitute new matter or which would require reexamination. Accordingly, it is believed that a Certificate of Correction is appropriate and is respectfully solicited.

The fee required by 37 CFR 1.20(a) of **$100.00** was paid with the Request for Certificate of Correction filed on June 18, 2009. Accordingly, no additional fee is believed to be due. However, if any fee is due, charge the fee to Deposit Account No. 50-1017.

PAGE 4/6 * RCVD AT 7/7/2009 4:26:10 PM [Eastern Daylight Time] * SVR:USPTO-EFXRF-5/33 * DNIS:2738300 * CSID:sent from 2159651331 * DURATION (mm-ss):01-54

Respectfully submitted,

By:

July 7, 2009
(Date)

Clark Jablon

CLARK A. JABLON
Registration No. 35,039
PANITCH SCHWARZE BELISARIO & NADEL LLP
One Commerce Square
2005 Market Street, Suite 2200
Philadelphia, PA 19103-7013
Telephone: 215.965.1330
Direct Dial: 215.965.1293
Facsimile: 215.965.1331
E-Mail: cjablon@panitchlaw.com

CAJ/DCM
Enclosures

143040 v1

PAGE 5/8 * RCVD AT 7/7/2009 4:26:10 PM [Eastern Daylight Time] * SVR:USPTO-EFXRF-5/33 * DNIS:2738300 * CSID:sent from 2159651331 * DURATION (mm-ss):01-54

PTO/SB/44 (09-07)
Approved for use through 08/31/2010. OMB 0651-0033
U.S. Patent and Trademark Office; U.S. DEPARTMENT OF COMMERCE
Under the Paperwork Reduction Act of 1995, no persons are required to respond to a collection of information unless it displays a valid OMB control number.
(Also Form PTO-1050)

UNITED STATES PATENT AND TRADEMARK OFFICE
CERTIFICATE OF CORRECTION

Page 1 of 1

PATENT NO. : 7,440,914 B2

APPLICATION NO.: 10/124,462

ISSUE DATE : October 21, 2008

INVENTOR(S) : Mark P. Jacobsen

It is certified that an error appears or errors appear in the above-identified patent and that said Letters Patent is hereby corrected as shown below:

Title Page, Section (73):

The Assignee should read: -- Promontory Interfinancial Network, LLC, Arlington, VA (US) --.

MAILING ADDRESS OF SENDER (Please do not use customer number below):

Clark A. Jablon
Panitch Schwarze Belisario & Nadel LLP
2005 Market Street, Suite 2200
Philadelphia, PA 19103-7013

This collection of information is required by 37 CFR 1.322, 1.323, and 1.324. The information is required to obtain or retain a benefit by the public which is to file (and by the USPTO to process) an application. Confidentiality is governed by 35 U.S.C. 122 and 37 CFR 1.14. This collection is estimated to take 1.0 hour to complete, including gathering, preparing, and submitting the completed application form to the USPTO. Time will vary depending upon the individual case. Any comments on the amount of time you require to complete this form and/or suggestions for reducing this burden, should be sent to the Chief Information Officer, U.S. Patent and Trademark Office, U.S. Department of Commerce, P.O. Box 1450, Alexandria, VA 22313-1450. DO NOT SEND FEES OR COMPLETED FORMS TO THIS ADDRESS. **SEND TO: Attention Certificate of Corrections Branch, Commissioner for Patents, P.O. Box 1450, Alexandria, VA 22313-1450.**

If you need assistance in completing the form, call 1-800-PTO-9199 and select option 2.

UNITED STATES PATENT AND TRADEMARK OFFICE

COMMISSIONER FOR PATENTS
UNITED STATES PATENT AND TRADEMARK OFFICE
WASHINGTON, D.C. 20231
www.uspto.gov

Paper No. 4

COPY MAILED

SEP 1 0 2002

OFFICE OF PETITIONS

BIRCH STEWART KOLASCH & BIRCH
PO BOX 747
FALLS CHURCH VA 22040-0747

In re Application of
Park
Application No. 10/124,477
Filed: April 18, 2002
Attorney Docket No. 2332-0114P
For: METHOD OF FABRICATING CAPACITOR IN SEMICONDUCTOR DEVICE AND THE CAPACITOR

DECISION GRANTING PETITION

This is a decision on the petition entitled, "PETITION IN REPLY TO NOTICE OF OMITTED ITEMS IN A NONPROVISIONAL APPLICATION," filed July 16, 2002, requesting, in effect, withdrawal of the Notice of Omitted Items in a Nonprovisional Application Papers (Notice), mailed May 29, 2002. The petition will be treated under 37 CFR 1.53(e).

The application was filed on April 18, 2002. On May 29, 2002, the Office of Initial Patent Examination mailed a Notice informing petitioner that pages 15 and 16 of the specification appeared to have been omitted.

In response to the Notice, petitioner timely filed the present petition. Petitioner requests that pages 15 and 16 be accorded a filing date of April 18, 2002 on the basis that the allegedly missing pages were received in the Patent and Trademark Office (PTO) on April 18, 2002. In support, the petition is accompanied by a copy of applicant's itemized postcard receipt showing an Office of Initial Patent Examination generated barcode and date stamp citing April 18, 2002 as the date of receipt. The postcard lists, *inter alia*, that the filing included 21 pages of specification.

The return postcard constitutes *prima facie* evidence that pages 15 and 16 were filed on April 18, 2002. MPEP 503. Accordingly, the request is **granted**.

Pursuant to petitioner's authorization, deposit account no. 02-2448 will be credited the $130.00 petition fee submitted on July 16, 2002.

The application is being returned to Office of Initial Patent Examination for further processing, with a filing date of **April 18, 2002**, using the copies of pages 15 and 16 submitted with the instant petition.

Any inquiries pertaining to this matter may be directed to the undersigned at (703) 308-6712.

E. Shirene Willis

E. Shirene Willis
Senior Petitions Attorney
Office of Petitions
Office of the Deputy Commissioner
for Patent Examination Policy

UNITED STATES PATENT AND TRADEMARK OFFICE

Commissioner for Patents
United States Patent and Trademark Office
P.O. Box 1450
Alexandria, VA 22313-1450
www.uspto.gov

H. John Rizvi
Gold & Rizvi, P.A.
Suite 450
600 N. Pine Island Rd.
Plantation FL 33324

COPY MAILED

AUG 2 3 2005

OFFICE OF PETITIONS

In re Application of
Einstein
Application No. 10/124,517
Filed: July 13, 2005
Attorney Docket No. 1022.0100

DECISION
ON PETITION

This is a decision on the petition under 37 CFR 1.137(b), filed July 13, 2005, to revive the above-identified application.

The petition is **GRANTED**.

The application became abandoned for failure to submit the issue fee in a timely manner in reply to the Notice of Allowance and Fee(s) Due, mailed March 10, 2005, which set a statutory period for reply of three (3) months. Accordingly, the application became abandoned on June 11, 2005.

The petition satisfies the conditions for revival pursuant to the provisions of 37 CFR 1.137(b) in that (1) the reply in the form of the issue fee of $700; (2) the petition fee of $750; and (3) the required statement of unintentional delay have been received. Accordingly, the issue fee payment is accepted as having been unintentionally delayed.

Telephone inquiries concerning this decision should be directed to Denise Pothier at (571) 272-4787.

The application matter is being forwarded to Office of Patent Publication.

Frances Hicks
Petitions Examiner
Office of Petitions

UNITED STATES PATENT AND TRADEMARK OFFICE

Commissioner for Patents
United States Patent and Trademark Office
P.O. Box 1450
Alexandria, VA 22313-1450
www.uspto.gov

BERKELEY LAW & TECHNOLOGY GROUP
5250 NE ELAM YOUNG PARKWAY
SUITE 850
HILLSBORO, OR 97124

COPY MAILED

JUN 27 2005

OFFICE OF PETITIONS

In re Application of :
Hovers, et al. :
Application No. 10/124,522 :
Filed: April 16, 2002 :
Attorney Docket No. 012-P4019 :

ON PETITION

This is a decision on the petition under 37 C.F.R. 1.137(b), filed April 21, 2005, to revive the above-identified application.

The petition is **dismissed**.

Any request for reconsideration of this decision must be submitted within TWO (2) MONTHS from the mail date of this decision. Extensions of time under 37 CFR 1.136(a) are permitted. The reconsideration request should include a cover letter entitled "Renewed Petition under 37 CFR 1.137(b)."

This application became abandoned for failure to timely pay the issue fee and publication fee, if applicable, on or before January 24, 2005. Accordingly, this application became abandoned on January 25, 2005. A Notice of Abandonment was mailed on March 3, 2005.

Effective December 1, 1997, the provisions of 37 CFR 1.137(b) now provide that where the delay in reply was unintentional, a petition may be filed to revive an abandoned application pursuant to 37 CFR 1.137(b). A grantable petition pursuant to 37 CFR 1.137(b) must be accompanied by:

(1) the required reply, unless previously filed. In a nonprovisional application abandoned for failure to prosecute, the required reply may be met by the filing of a continuing application. In an application, abandoned or lapsed for failure to pay the issue fee or any portion thereof, the required reply must be the payment of the issue fee or any outstanding balance thereof.

(2) the petition fee as set forth in 37 CFR 1.17(m);

(3) a statement that the **entire** delay in filing the required reply from the due date for the reply until the filing of a grantable petition pursuant to 37 CFR 1.137(b) was unintentional. The Commissioner may require additional information where there is a question whether the delay was unintentional; and

(4) any terminal disclaimer (and fee set forth in 37 CFR 1.20(d)) required pursuant to 37 CFR 1.137(d).

The instant petition does not satisfy requirement (1) above.

The issue fee has not been submitted.

Please note, MPEP 711.03(c):

> "35 U.S.C. 41(a)(7) and 151 each require payment of the issue fee as a condition of reviving an application abandoned or patent lapsed for failure to pay the issue fee. Therefore, the filing of a continuing application without payment of the issue fee or any outstanding balance thereof is not an acceptable reply in an application abandoned or patent lapsed for failure to pay the issue fee or any portion thereof."

Accordingly, the petition must be dismissed.

Furthermore, please note, it appears that the submission required under 37 CFR 1.114 which must accompany the Request for Continued Examination (RCE) has not been submitted. As such, the RCE, filed April 21, 2005, is considered improper.

Further correspondence with respect to this matter should be addressed as follows:

By mail: Mail Stop Petition
Commissioner for Patents
Box 1450
Alexandria, VA 22313

By FAX: (703) 872-9306
Attn: Office of Petitions

By hand: Customer Service Window
Randolph Building
401 Dulany Street
Alexandria, VA 22314

Telephone inquiries should be directed to the undersigned at (571) 272-3228.

Edward J. Tannouse
Petitions Attorney
Office of Petitions/Patent
United States Patent and Trademark Office

UNITED STATES PATENT AND TRADEMARK OFFICE

Commissioner for Patents
United States Patent and Trademark Office
P.O. Box 1450
Alexandria, VA 22313-1450
www.uspto.gov

BERKELEY LAW & TECHNOLOGY GROUP
1700NW 167TH PLACE
SUITE 240
BEAVERTON, OR 97006

COPY MAILED

SEP 14 2005

OFFICE OF PETITIONS

In re Application of	:	
Hovers, et al.	:	
Application No. 10/124,522	:	ON PETITION
Filed: April 16, 2002	:	
Attorney Docket No. 012-P4019	:	

This is a decision on the renewed petition under 37 CFR 1.137(b), filed August 31, 2005 (Certificate of Mailing Date: August 29, 2005), to revive the above-identified application.

The petition is **GRANTED**.

This application became abandoned for failure to timely pay the issue fee and publication fee, if applicable, on or before January 24, 2005. Accordingly, this application became abandoned on January 25, 2005. A Notice of Abandonment was mailed on March 3, 2005.

The application shall be withdrawn from issue and forwarded to Technology Center 2600 for review of the RCE submitted April 21, 2005, and the amendment and IDS, submitted at later date.

The issue fee, submitted August 31, 2005, may be applied to any later Notice of Allowance that may be issued in the above-identified application.

Telephone inquiries concerning this matter may be directed to the undersigned at (571) 272-3228.

Edward J. Tannouse
Petitions Attorney
Office of Petitions
Office of the Deputy Commissioner
for Patent Examination Policy

UNITED STATES PATENT AND TRADEMARK OFFICE

Commissioner for Patents
United States Patent and Trademark Office
P.O. Box 1450
Alexandria, VA 22313-1450
www.uspto.gov

Paper No.

MCDONNELL BOEHNEN HULBERT &
BERGHOFF LLP
300 S. WACKER DRIVE
32ND FLOOR
CHICAGO IL 60606

COPY MAILED

MAR 26 2009

OFFICE OF PETITIONS

In re Application of	:	
Hovers et al.	:	
Application No. 10/124,522	:	ON APPLICATION FOR
Filed: April 16, 2002	:	PATENT TERM ADJUSTMENT
Atty Docket No. 012-P4019	:	

This is in response to the REQUEST FOR RECONSIDERATION OF THE PATENT TERM ADJUSTMENT filed October 22, 2008. Applicants request that the determination of patent term adjustment be corrected from six hundred thirty-eight (638) days to one thousand five hundred forty-five (1545) days[1]. Applicant requests this correction on the basis that the Office will take in excess of three years to issue this patent and in light of the recent court decision in Wyeth v. Dudas, No. 07-1492 (D.D.C. September 30, 2008).

As the instant application for patent term adjustment requests reconsideration of the patent term adjustment as it relates to the Office's failure to issue the patent within 3 years of the filing date, a decision is being **held in abeyance** until after the actual patent date. Knowledge of the actual date the patent issues is required to calculate the amount, if any, of additional patent term patentee is entitled to for Office failure to issue the patent within 3 years. See § 1.703(b). (This is true even in this instance where a request for continued examination (RCE) was filed. The computer will not undertake the § 1.703(b) calculation until the actual date of issuance of the patent has been determined. Accordingly, it is still too soon to make a determination as to the correctness of

[1] This calculation assumes a patent issue date of January 29, 2009.

any period of adjustment that will or will not be entered pursuant to § 1.703(b)).

Applicant is given TWO (2) MONTHS from the issue date of the patent to file a written request for reconsideration of the patent term adjustment for Office failure to issue the patent within 3 years. A copy of this decision should accompany the request. Applicant may seek such consideration without payment of an additional fee. However, as to all other bases for seeking reconsideration of the patent term adjustment indicated in the patent, all requirements of § 1.705(d) must be met. Requests for reconsideration on other bases must be timely filed and must include payment of the required fee.

Rather than file the request for reconsideration of Patent Term Adjustment at the time of the mailing of the notice of allowance, applicant is advised that they may wait until the time of the issuance of the patent and file a request for reconsideration of the patent term pursuant to 37 CFR 1.705(d). The USPTO notes that it does not calculate the amount of time earned pursuant to 37 CFR 1.702(b) until the time of the issuance of the patent and accordingly, the Office will consider any request for reconsideration of the patent term adjustment due to an error in the calculation of 37 CFR 1.702(b) to be timely if the request for reconsideration is filed within two months of the issuance of the patent.

It is noted that applicants request fails to recognize that a request for continued examination (RCE) was filed in this application on April 21, 2005, three years and 5 days after the actual filing date. Applicants are advised that any period of adjustment will be entered in light of 35 U.S.C. 154(B) GUARANTEE OF NO MORE THAN 3-YEAR APPLICATION PENDENCY, which provides that:

> Subject to the limitations under paragraph (2), if the issue of an original patent is delayed due to the failure of the United States Patent and Trademark Office to issue a patent within 3 years after the actual filing date of the application in the United States, not including —
>
> (i) any time consumed by continued examination of the application requested by the applicant under section 132(b);

Accordingly, no further patent term adjustment for the Office taking in excess of three years to issue the patent is accumulated as of the filing of the RCE.

The Office acknowledges submission of the $200.00 fee set forth in 37 CFR 1.18(e). No additional fees are required.

The application is being forwarded to the Office of Data Management for issuance of the patent. The patent term adjustment indicated on the patent (as shown on the Issue Notification mailed about three weeks prior to patent issuance) will include any additional adjustment accrued both for Office delay in issuing the patent more than four months after payment of the issue fee and satisfaction of all outstanding requirements, and for the Office taking in excess of three years to issue the patent (to the extent that the three-year period does not overlap with periods already accorded).

Telephone inquiries specific to this decision should be directed to the undersigned at (571) 272-3219.

Nancy Johnson
Senior Petitions Attorney
Office of Petitions

UNITED STATES PATENT AND TRADEMARK OFFICE

Commissioner for Patents
United States Patent and Trademark Office
P.O. Box 1450
Alexandria, VA 22313-1450
www.uspto.gov

BERKELEY LAW & TECHNOLOGY GROUP
5250 NE ELAM YOUNG PARKWAY
SUITE 850
HILLSBORO OR 97124

COPY MAILED

JUL 0 8 2005

OFFICE OF PETITIONS

In re Application of :
Omri Hovers et al :
Application No. 10/124,540 : ON PETITION
Filed: April 16, 2002 :
Attorney Docket No. 012-P4018 :

This is a decision on the petition under 37 CFR 1.137(b), filed April 21, 2005, to revive the above-identified application.

The petition is **DISMISSED**.

Any request for reconsideration of this decision must be submitted within TWO (2) MONTHS from the mail date of this decision. Extensions of time under 37 CFR 1.136(a) are permitted. The reconsideration request should include a cover letter entitled "Renewed Petition under 37 CFR 1.137(b)." This is **not** a final agency action within the meaning of 5 U.S.C. § 704.

A grantable petition under 37 CFR 1.137(b)[1] must be accompanied by: (1) the required reply,[2] unless previously filed; (2) the petition fee as set forth in 37 CFR 1.17(m); (3) a statement that the entire delay in filing the required reply from the due date for the reply until the filing of a grantable petition pursuant

---

[1] As amended effective December 1, 1997. See Changes to Patent Practice and Procedure; Final Rule Notice, 62 Fed. Reg. 53131, 53194-95 (October 10, 1997), 1203 Off. Gaz. Pat. Office 63, 119-20 (October 21, 1997).

[2] In a nonprovisional application abandoned for failure to prosecute, the required reply may be met by the filing of a continuing application. In an application or patent, abandoned or lapsed for failure to pay the issue fee or any portion thereof, the required reply must be the payment of the issue fee or any outstanding balance thereof.

to 37 CFR 1.137(b) was unintentional; and (4) any terminal disclaimer (and fee as set forth in 37 CFR 1.20(d)) required by 37 CFR 1.137(c). Where there is a question as to whether either the abandonment or the delay in filing a petition under 37 CFR 1.137 was unintentional, the Commissioner may require additional information. See MPEP 711.03(c)(III)(C) and (D). The instant petition lacks item(s) (1).

The issue fee have not been paid as required by the Notice of Allowance mailed December 9, 2004. The filing of an RCE is not proper if not submitted prior to or on the due date of the issue fee.

Additionally, the filing of an RCE requires an submission also.

Further correspondence with respect to this matter should be addressed as follows:

By mail: Mail Stop PETITIONS
Commissioner for Patents
Post Office Box 1450
Alexandria, VA 22313-1450

By hand: Customer Window located at:

Randolph Building
401 Dulany Street
Alexandria, VA 22314

By fax: (703) 872-9306
ATTN: Office of Petitions

Telephone inquiries concerning this decision should be directed to Karen Creasy at (571) 272-3208.

Karen Creasy

Karen Creasy
Petitions Examiner
Office of Petitions
Office of the Deputy Commissioner
for Patent Examination Policy

UNITED STATES PATENT AND TRADEMARK OFFICE

Commissioner for Patents
United States Patent and Trademark Office
P.O. Box 1450
Alexandria, VA 22313-1450
www.uspto.gov

BERKELEY LAW & TECHNOLOGY GROUP
1700 NW 16TH PLACE
SUITE 240
BEAVERTON OR 97006

COPY MAILED

MAR 24 2006

OFFICE OF PETITIONS

In re Application of	:
Omri Hovers et al	:
Application No. 10/124,540	: DECISION GRANTING PETITION
Filed: April 16, 2002	: UNDER 37 CFR 1.137(b)
Attorney Docket No. 012-P4018	:

This is a decision on the renewed petition under 37 CFR 1.137(b), filed October 13, 2005, to revive the above-identified application.

The petition is **GRANTED.**

The power of attorney submitted with the instant petition is not complete because no new attorneys were appointed.

Further, a Two Month Extension of Time fee ($450) is being charged to deposit account no. 50-3130 as authorized.

Petitioner is advised that the issue fee paid may be applied towards the issue fee required by the new Notice of Allowance.[1]

Telephone inquiries should be directed to the undersigned at (571) 272-3208.

---

[1] The request to apply the issue fee to the new Notice may be satisfied by completing and returning the new Issue Fee Transmittal Form PTOL-85(b), which includes the following language thereon: "Commissioner for Patents is requested to apply the Issue Fee and Publication Fee (if any) or re-apply any previously paid issue fee to the application identified above." Petitioner is advised that, whether a fee is indicated as being due or not, the Issue Fee Transmittal Form **must** be completed and timely submitted to avoid abandonment. Note the language in bold text on the first page of the Notice of Allowance and Fee(s) Due (PTOL-85).

The examiner of Technology Center AU 2617 will consider the request for continued examination under 37 CFR 1.114.

Karen Creasy

Karen Creasy
Petitions Examiner
Office of Petitions
Office of the Deputy Commissioner
for Patent Examination Policy

UNITED STATES PATENT AND TRADEMARK OFFICE

Commissioner for Patents
United States Patent and Trademark Office
P.O. Box 1450
Alexandria, VA 22313-1450
www.uspto.gov

Paper No.

BERKELEY LAW & TECHNOLOGY
GROUP, LLP
17933 NW Evergreen Parkway
Suite 250
BEAVERTON OR 97006

COPY MAILED

FEB 0 5 2008

OFFICE OF PETITIONS

In re Application of	:	
Hovers et al.	:	
Application No. 10/124,540	:	LETTER REGARDING
Filed: April 16, 2002	:	PATENT TERM ADJUSTMENT
Atty Docket No. 012.P4018	:	

This letter is in response to the "REQUEST TO CORRECT THE PATENT TERM ADJUSTMENT" filed November 9, 2007. Pursuant to their duty of good faith and candor to the Office, applicants disclose that the correct patent term adjustment at the time of the mailing of the notice of allowance is 281 days, not 403 days.

The request for review of the initial determination of patent term adjustment (PTA) is **GRANTED to the extent indicated herein.**

The Office has updated the PAIR screen to reflect that the correct Patent Term Adjustment determination at the time of the mailing of the Notice of Allowance is TWP HUNDRED EIGHTY (280) days. A copy of the updated PALM INTRANET screen, showing the correct determination, is enclosed.

On August 9, 2007, the Office mailed the Determination of Patent Term Adjustment under 35 U.S.C. 154(b) in the above-identified application. The Notice stated that the patent term adjustment to date is 403 days. Applicants disclose that a reduction of 340 days, not 218 days, should have resulted from the abandonment and subsequent revival of this application.

Applicants are correct that the period of reduction of 218 days is incorrect. 37 CFR 1.704(c) provides, in pertinent part:

> (3) Abandonment of the application or late payment of the issue fee, in which case the period of adjustment set forth in §1.703 shall be reduced by the number of days, if any, beginning on the date of abandonment or the date after the date the issue fee was due and ending on the earlier of:
>
> (i) The date of mailing of the decision reviving the application or accepting late payment of the issue fee; or
> (ii) The date that is four months after the date the grantable petition to revive the application or accept late payment of the issue fee was filed;

In this instance, the period of reduction is 341 days, counting the number of days beginning on March 10, 2005, the date after the date the issue fee was due, and ending on February 13, 2006, the earlier date four months after October 13, 2005, the date a grantable renewed petition to revive was filed. Applicants are reminded that when a period is indicated (in 37 CFR 1.703 or 1.704) as "beginning" on a particular day, that day is included in the period, in that such day is "day one" of the period and not "day zero." For example, a period beginning on April 1 and ending on April 10 is ten (and not nine) days in length. See MPEP 2731. Thus, March 10, 2005 is counted and the period of reduction is 341 days, not 340 days.

In view thereof, the patent term adjustment at the time of the mailing of the notice of allowance is TWO HUNDRED EIGHTY (280) days.

As this letter was submitted as an advisement to the Office of an error in applicants' favor, the Office will not assess the $200.00 fee under 37 CFR 1.18(e). The Office thanks applicants for their good faith and candor in bringing this to the attention of the Office.

The Office of Patent Publication has been advised of this decision. The application is, thereby, forwarded to the Office of Patent Publication for issuance of the application. The patent term adjustment indicated on the patent (as shown on the Issue Notification mailed about three weeks prior to patent issuance) will include any additional adjustment accrued both for Office delay in issuing the patent more than four months

after payment of the issue fee and satisfaction of all outstanding requirements, and for the Office taking in excess of three years to issue the patent (to the extent that the three-year period does not overlap with periods already accorded and considering any periods not counted due to the filing of a request for continued examination).

Telephone inquiries specific to this matter should be directed to the undersigned at (571) 272-3219.

Nancy Johnson
Senior Petitions Attorney
Office of Petitions

Enclosure: Copy of revised PALM PTA calculation

PALM INTRANET

Day : Friday
Date: 2/1/2008
Time: 11:27:02

PTA Calculations for Application: 10/124540			
Application Filing Date:	04/16/2002	PTO Delay (PTO):	686
Issue Date of Patent:		Three Years:	0
Pre-Issue Petitions:	0	Applicant Delay (APPL):	283
Post-Issue Petitions:	0	Total PTA (days):	280
PTO Delay Adjustment:	-123		

File Contents History

Number	Date	Contents Description	PTO	APPL	START
82	02/01/2008	ADJUSTMENT OF PTA CALCULATION BY PTO	218		
81	02/01/2008	ADJUSTMENT OF PTA CALCULATION BY PTO		341	
77	08/09/2007	MAIL NOTICE OF ALLOWANCE	24		66
76	08/08/2007	ISSUE REVISION COMPLETED			
75	08/08/2007	DOCUMENT VERIFICATION			
74	08/06/2007	NOTICE OF ALLOWANCE DATA VERIFICATION COMPLETED			
73	08/06/2007	NOTICE OF ALLOWABILITY			
72	03/16/2007	INFORMATION DISCLOSURE STATEMENT CONSIDERED			
71	03/16/2007	REFERENCE CAPTURE ON IDS			
70.7	03/16/2007	INFORMATION DISCLOSURE STATEMENT (IDS) FILED			
70	03/16/2007	INFORMATION DISCLOSURE STATEMENT (IDS) FILED			
69	05/09/2007	DATE FORWARDED TO EXAMINER			
68	03/16/2007	AMENDMENT SUBMITTED/ENTERED WITH FILING OF CPA/RCE			
67	05/09/2007	DATE FORWARDED TO EXAMINER			
66	03/16/2007	REQUEST FOR CONTINUED EXAMINATION (RCE)			
65	05/09/2007	DISPOSAL FOR A RCE/CPA/129 (EXPRESS ABANDONMENT IF CPA)			
64	03/16/2007	WORKFLOW - REQUEST FOR RCE - BEGIN			
63	02/15/2007	FINISHED INITIAL DATA CAPTURE			
62	01/16/2007	EXPORT TO INITIAL DATA CAPTURE			
61	01/11/2007	MAIL NOTICE OF ALLOWANCE			
60	01/08/2007	ISSUE REVISION COMPLETED			

59	01/08/2007	NOTICE OF ALLOWANCE DATA VERIFICATION COMPLETED			
58	01/08/2007	NOTICE OF ALLOWABILITY			
57	12/01/2006	DATE FORWARDED TO EXAMINER			
56	11/17/2006	RESPONSE AFTER NON-FINAL ACTION		65	54
55	11/17/2006	REQUEST FOR EXTENSION OF TIME - GRANTED			
54	06/13/2006	MAIL NON-FINAL REJECTION	120		47
53	06/12/2006	NON-FINAL REJECTION			
52	10/13/2005	INFORMATION DISCLOSURE STATEMENT CONSIDERED			
50	04/03/2006	DATE FORWARDED TO EXAMINER			
49	10/13/2005	AMENDMENT SUBMITTED/ENTERED WITH FILING OF CPA/RCE			
48	04/03/2006	DATE FORWARDED TO EXAMINER			
47	10/13/2005	REQUEST FOR CONTINUED EXAMINATION (RCE)		218	17
46	04/03/2006	DISPOSAL FOR A RCE/CPA/129 (EXPRESS ABANDONMENT IF CPA)			
45	03/24/2006	MAIL-RECORD PETITION DECISION OF GRANTED TO ACCEPT DELAYED PAYMENT OF ISSUE FEE			
44	10/13/2005	PETITION ENTERED			
43	03/21/2006	CASE DOCKETED TO EXAMINER IN GAU			
42	10/13/2005	REFERENCE CAPTURE ON IDS			
41.7	10/13/2005	INFORMATION DISCLOSURE STATEMENT (IDS) FILED			
41	10/13/2005	INFORMATION DISCLOSURE STATEMENT (IDS) FILED			
33	10/13/2005	WORKFLOW - REQUEST FOR RCE - BEGIN			
32	10/13/2005	ISSUE FEE PAYMENT RECEIVED			
31	07/08/2005	MAIL-PETITION DECISION - DISMISSED			
30	04/21/2005	PETITION ENTERED			
24	04/15/2005	MAIL ABANDONMENT FOR FAILURE TO PAY ISSUE FEE			
23	04/15/2005	ABANDONMENT FOR FAILURE TO PAY ISSUE FEE			
22	03/03/2005	RECEIPT INTO PUBS			
21	12/17/2004	EXPORT TO INITIAL DATA CAPTURE			
20	01/06/2005	CORRESPONDENCE ADDRESS CHANGE			

19	01/07/2005	CHANGE IN POWER OF ATTORNEY (MAY INCLUDE ASSOCIATE POA)			
18	12/28/2004	WORKFLOW - FILE SENT TO CONTRACTOR			
17	12/09/2004	MAIL NOTICE OF ALLOWANCE	542		-1
16	12/08/2004	NOTICE OF ALLOWANCE DATA VERIFICATION COMPLETED			
15	10/19/2004	ISSUE REVISION COMPLETED			
14	10/18/2004	NOTICE OF ALLOWABILITY			
13	09/22/2004	CASE DOCKETED TO EXAMINER IN GAU			
12	08/19/2004	CASE DOCKETED TO EXAMINER IN GAU			
11	08/10/2004	IFW TSS PROCESSING BY TECH CENTER COMPLETE			
10	07/15/2003	CASE DOCKETED TO EXAMINER IN GAU			
9	01/06/2003	CASE DOCKETED TO EXAMINER IN GAU			
8	09/27/2002	CASE DOCKETED TO EXAMINER IN GAU			
7	09/16/2002	APPLICATION DISPATCHED FROM OIPE			
6	09/06/2002	APPLICATION IS NOW COMPLETE			
5	07/30/2002	ADDITIONAL APPLICATION FILING FEES			
4	07/30/2002	APPLICANT HAS SUBMITTED NEW DRAWINGS TO CORRECT CORRECTED PAPERS PROBLEMS			
3	05/23/2002	CORRECTED PAPER			
2	05/02/2002	IFW SCAN & PACR AUTO SECURITY REVIEW			
1	04/16/2002	INITIAL EXAM TEAM NN			

Search Another: Application# Search

EXPLANATION OF PTA CALCULATION

EXPLANATION OF PTE CALCULATION

To go back, right click here and select Back. To go forward, right click here and select Forward. To refresh, right click here and select Refresh.

Back to OASIS | Home page

UNITED STATES PATENT AND TRADEMARK OFFICE

Commissioner for Patents
United States Patent and Trademark Office
P.O. Box 1450
Alexandria, VA 22313-1450
www.uspto.gov

BERKELEY LAW & TECHNOLOGY GROUP
5250 NE ELAM YOUNG PARKWAY
SUITE 850
HILLSBORO OR 97124

COPY MAILED

JUL 0 8 2005

OFFICE OF PETITIONS

In re Application of :
Omri Hovers et al :
Application No. 10/124,541 : ON PETITION
Filed: April 16, 2002 :
Attorney Docket No. 012-P4016 :

This is a decision on the petition under 37 CFR 1.137(b), filed April 21, 2005, to revive the above-identified application.

The petition is **DISMISSED**.

Any request for reconsideration of this decision must be submitted within TWO (2) MONTHS from the mail date of this decision. Extensions of time under 37 CFR 1.136(a) are permitted. The reconsideration request should include a cover letter entitled "Renewed Petition under 37 CFR 1.137(b)." This is **not** a final agency action within the meaning of 5 U.S.C. § 704.

A grantable petition under 37 CFR 1.137(b)[1] must be accompanied by: (1) the required reply,[2] unless previously filed; (2) the petition fee as set forth in 37 CFR 1.17(m); (3) a statement that the entire delay in filing the required reply from the due date for the reply until the filing of a grantable petition pursuant

---

[1] As amended effective December 1, 1997. See Changes to Patent Practice and Procedure; Final Rule Notice, 62 Fed. Reg. 53131, 53194-95 (October 10, 1997), 1203 Off. Gaz. Pat. Office 63, 119-20 (October 21, 1997).

[2] In a nonprovisional application abandoned for failure to prosecute, the required reply may be met by the filing of a continuing application. In an application or patent, abandoned or lapsed for failure to pay the issue fee or any portion thereof, the required reply must be the payment of the issue fee or any outstanding balance thereof.

to 37 CFR 1.137(b) was unintentional; and (4) any terminal disclaimer (and fee as set forth in 37 CFR 1.20(d)) required by 37 CFR 1.137(c). Where there is a question as to whether either the abandonment or the delay in filing a petition under 37 CFR 1.137 was unintentional, the Commissioner may require additional information. See MPEP 711.03(c)(III)(C) and (D). The instant petition lacks item(s) (1).

The issue fee have not been paid as required by the Notice of Allowance mailed October 6, 2004. The filing of an RCE is not proper if not submitted prior to or on the due date of the issue fee.

Additionally, the filing of an RCE requires an submission also.

Further correspondence with respect to this matter should be addressed as follows:

By mail: Mail Stop PETITIONS
Commissioner for Patents
Post Office Box 1450
Alexandria, VA 22313-1450

By hand: Customer Window located at:

Randolph Building
401 Dulany Street
Alexandria, VA 22314

By fax: (703) 872-9306
ATTN: Office of Petitions

Telephone inquiries concerning this decision should be directed to Karen Creasy at (571) 272-3208.

Karen Creasy

Karen Creasy
Petitions Examiner
Office of Petitions
Office of the Deputy Commissioner
for Patent Examination Policy

UNITED STATES PATENT AND TRADEMARK OFFICE

Commissioner for Patents
United States Patent and Trademark Office
P.O. Box 1450
Alexandria, VA 22313-1450
www.uspto.gov

JJGJR.: 11-05

Paper No: __

BERKELEY LAW
& TECHNOLOGY GROUP
1700NW 167TH PLACE
SUITE 240
BEAVERTON OR 97006

COPY MAILED

DEC 19 2005

OFFICE OF PETITIONS

In re Application of	:	
Hovers, et al.	:	
Application No. 10/124,541	:	DECISION
Filing Date: 16 April, 2002	:	
Attorney Docket No. 012.P4016	:	

This is a decision on the petition filed on 13 October, , 2005, to revive the instant application under 37 C.F.R. §1.137(b) as having been abandoned due to unintentional delay.

For the reasons set forth below, the petition under 37 C.F.R. §1.137(b) **DISMISSED**.

NOTES:

(1) Any petition (and fee) for reconsideration of this decision under 37 C.F.R. §1.137(b)[1] (as to unintentional delay) must be submitted within two (2) months

[1] Effective December 1, 1997, the provisions of 37 C.F.R. §1.137(b) now provide that where the delay in reply was unintentional, a petition may be filed to revive an abandoned application or a lapsed patent pursuant to 37 C.F.R. §1.137(b). a grantable petition filed under the provisions of 37 C.F.R. §1.137(b) must be accompanied by:
(1) the required reply, unless previously filed. In a nonprovisional application abandoned for failure to prosecute, the required reply may be met by the filing of a continuing application. In an application or patent, abandoned or lapsed for failure to pay the issue fee or any portion thereof, the required reply must be the payment of the issue fee or any outstanding balance thereof.

from the mail date of this decision. Extensions of time under 37 C.F.R. §1.136(a) are permitted. The reconsideration request should include a cover letter entitled "Renewed Petition under 37 C.F.R. §1.137(b)."

(2) Thereafter, there will be no further reconsideration of this matter.

BACKGROUND

The record reflects that:

- Petitioner failed to reply timely and properly to the Notice of Allowance and Fees Due mailed on 6 October, 2004, with reply due under a non-extendable deadline on or before 6 January, 2005;
- the application went abandoned after midnight 6 January, 2005;
- the Office mailed the Notice of Abandonment on 25 February, 2005;
- with the petition submitted on 21 April, 2005, was dismissed on 8 July, 2005, *inter alia*, for failure to file the reply because Petitioner filed a request for Continued Examination, but failed to include therewith the submission required under the rule (see: 37 C.F.R. §1.114);
- it now appears that Petitioner's credit card authorization for fees (petition fee and RCE fee) was denied by the card issuer.

Thus, as of this writing it appears that Petitioner has failed satisfy the fee requirements of a under 37 C.F.R. §1.137(b) and of the RCE under 37 C.F.R. §1.114.

STATUTES, REGULATIONS AND ANALYSIS

Congress has authorized the Commissioner to "revive an application if the delay is shown to the

---

(2) the petition fee as set forth in 37 C.F.R. §1.17(m);
(3) a statement that the entire delay in filing the required reply from the due date for the reply until the filing of a grantable petition pursuant to 37 C.F.R. §1.137(b) was unintentional. The Commissioner may require additional information where there is a question whether the delay was unintentional; and
(4) any terminal disclaimer (and fee set forth in 37 C.F.R. §1.20(d)) required pursuant to 37 C.F.R. §1.137(c). (Emphasis supplied.)

satisfaction of the Commissioner to have been "unavoidable." 35 U.S.C. §133 (1994).[2]

The regulations at 37 C.F.R. §1.137(a) and (b) set forth the requirements for a petitioner to revive a previously unavoidably or unintentionally, respectively, abandoned application under this congressional grant of authority. The language of 35 U.S.C. §133 and 37 C.F.R. §1.137(a) is clear, unambiguous, and without qualification: the delay in tendering the reply to the outstanding Office action, as well as filing the first petition seeking revival, must have been unavoidable for the reply now to be accepted on petition.[3]

Delays in responding properly raise the question whether delays are unavoidable.[4] Where there is a question whether the delay was unavoidable, Petitioners must meet the burden of establishing that the delay was unavoidable within the meaning of 35 U.S.C. §133 and 37 C.F.R. §1.137(a).[5]

And the Petitioner must be diligent in attending to the matter.[6] Failure to do so does not constitute the care required under Pratt, and so cannot satisfy the test for diligence and due care.

(By contrast, unintentional delays are those that do not satisfy the very strict statutory and regulatory requirements of unavoidable delay, and also, by definition, are not intentional.[7]))

Allegations as to Unintentional Delay

A grantable petition under 37 C.F.R. §1.137(b) requires a petition, fee, statement of unintentional delay, reply, and a terminal disclaimer and fee if appropriate.

As indicated above, neither the fee nor the fee for the reply requirements of the regulation appear to have been satisfied as of this writing.

---

[2] 35 U.S.C. §133 provides:
35 U.S.C. §133 Time for prosecuting application.
Upon failure of the applicant to prosecute the application within six months after any action therein, of which notice has been given or mailed to the applicant, or within such shorter time, not less than thirty days, as fixed by the Commissioner in such action, the application shall be regarded as abandoned by the parties thereto, unless it be shown to the satisfaction of the Commissioner that such delay was unavoidable.

[3] Therefore, by example, an unavoidable delay in the payment of the Filing Fee might occur if a reply is shipped by the US Postal Service, but due to catastrophic accident, the delivery is not made.

[4] See: *Changes to Patent Practice and Procedure*; *Final Rule Notice*, 62 *Fed. Reg.* at 53158-59 (October 10, 1997), 1203 *Off. Gaz. Pat. Office* at 86-87 (October 21, 1997).

[5] See: In re Application of G, 11 USPQ2d 1378, 1380 (Comm'r Pats. 1989).

[6] See: Diligence in Filing Petitions to Revive and Petitions to Withdraw the Holding of Abandonment, 1124 Off. Gaz. Pat. Office 33 (March 19, 1991). It was and is Petitioner's burden to exercise diligence in seeking either to have the holding of abandonment withdrawn or the application revived. See 1124 Off. Gaz. Pat. Office supra.

[7] Therefore, by example, an unintentional delay in the reply might occur if the reply and transmittal form are to be prepared for shipment by the US Postal Service, but other pressing matters distract one's attention and the mail is not timely deposited for shipment.

CONCLUSION

The petition under 37 C.F.R. §1.137(b) hereby is **dismissed**.

Further correspondence with respect to this matter should be addressed as follows:[8]

By mail: Commissioner for Patents[9]
P.O. Box 1450
Alexandria, VA 22313-1450

By FAX: IFW Formal Filings
(571) 273-8300
ATTN.: Office of Petitions

By hand: Mail Stop: Petition
Customer Service Window
Randolph Building
401 Dulany Street
Alexandria, VA 22314

Telephone inquiries concerning this decision may be directed to the undersigned at (571) 272-3214.

John J. Gillon, Jr.
Senior Attorney
Office of Petitions

[8] On July 15, 2005, the Central Facsimile (FAX) Number will change from (703) 872-9306 to (571) 273-8300. Faxes sent to the old number will be routed to the new number until September 15, 2005. After September 15, 2005, the old number will no longer be in service and (571) 273-8300 will be the only facsimile number recognized for centralized delivery. (For further information. see: http://www.uspto.gov/web/offices/pac/dapp/opla/preognotice/cfax062005.pdf .)

[9] To determine the appropriate addresses for other subject-specific correspondence, refer to the USPTO Web site at www.uspto.gov.

UNITED STATES PATENT AND TRADEMARK OFFICE

Commissioner for Patents
United States Patent and Trademark Office
P.O. Box 1450
Alexandria, VA 22313-1450
www.uspto.gov

JJGJR.: 03-06

Paper No: __

COPY MAILED

MAR 0 3 2006

OFFICE OF PETITIONS

BERKELEY LAW
& TECHNOLOGY GROUP
1700NW 167TH PLACE
SUITE 240
BEAVERTON OR 97006

In re Application of	:	
Hovers, et al.	:	
Application No. 10/124,541	:	DECISION
Filing Date: 16 April, 2002	:	
Attorney Docket No. 012.P4016	:	

This is a decision on the petition filed on 21 February, 2006, to revive the instant application under 37 C.F.R. §1.137(b) as having been abandoned due to unintentional delay.

For the reasons set forth below, the petition under 37 C.F.R. §1.137(b) **GRANTED**.

BACKGROUND

The record reflects that:

- Petitioner failed to reply timely and properly to the Notice of Allowance and Fees Due mailed on 6 October, 2004, with reply due under a non-extendable deadline on or before 6 January, 2005;

- the application went abandoned after midnight 6 January, 2005;

- the Office mailed the Notice of Abandonment on 25 February, 2005;
- the petition submitted on 21 April, 2005, was dismissed on 8 July, 2005, *inter alia*, for failure to file the reply because Petitioner filed a request for Continued Examination, but failed to include therewith the submission required under the rule (see: 37 C.F.R. §1.114);
- the petition filed on 13 October, 2005, was dismissed because Petitioner's credit card authorization for fees (petition fee and RCE fee) was denied by the card issuer;
- it appears that with the instant petition and deposit account authorization Petitioner has overcome these deficiencies.

STATUTES, REGULATIONS AND ANALYSIS

Congress has authorized the Commissioner to "revive an application if the delay is shown to the satisfaction of the Commissioner to have been "unavoidable." 35 U.S.C. §133 (1994).[1]

The regulations at 37 C.F.R. §1.137(a) and (b) set forth the requirements for a petitioner to revive a previously unavoidably or unintentionally, respectively, abandoned application under this congressional grant of authority. The language of 35 U.S.C. §133 and 37 C.F.R. §1.137(a) is clear, unambiguous, and without qualification: the delay in tendering the reply to the outstanding Office action, as well as filing the first petition seeking revival, must have been unavoidable for the reply now to be accepted on petition.[2]

Delays in responding properly raise the question whether delays are unavoidable.[3] Where there is a question whether the delay was unavoidable, Petitioners must meet the burden of establishing that the delay was unavoidable within the meaning of 35 U.S.C. §133 and 37 C.F.R. §1.137(a).[4]

---

[1] 35 U.S.C. §133 provides:
35 U.S.C. §133 Time for prosecuting application.
Upon failure of the applicant to prosecute the application within six months after any action therein, of which notice has been given or mailed to the applicant, or within such shorter time, not less than thirty days, as fixed by the Commissioner in such action, the application shall be regarded as abandoned by the parties thereto, unless it be shown to the satisfaction of the Commissioner that such delay was unavoidable.

[2] Therefore, by example, an unavoidable delay in the payment of the Filing Fee might occur if a reply is shipped by the US Postal Service, but due to catastrophic accident, the delivery is not made.

[3] See: *Changes to Patent Practice and Procedure; Final Rule Notice*, 62 *Fed. Reg.* at 53158-59 (October 10, 1997), 1203 *Off. Gaz. Pat. Office* at 86-87 (October 21, 1997).

[4] See: In re Application of G, 11 USPQ2d 1378, 1380 (Comm'r Pats. 1989).

And the Petitioner must be diligent in attending to the matter.[5] Failure to do so does not constitute the care required under Pratt, and so cannot satisfy the test for diligence and due care.

(By contrast, unintentional delays are those that do not satisfy the very strict statutory and regulatory requirements of unavoidable delay, and also, by definition, are not intentional.[6]))

Allegations as to Unintentional Delay

A grantable petition under 37 C.F.R. §1.137(b) requires a petition, fee, statement of unintentional delay, reply, and a terminal disclaimer and fee if appropriate.

Petitioner has filed the petition (with fee authorization) with the reply in the form of an RCE (with fee authorization) and submission and has made the statement of unintentional delay.

Petitioner, it appears, has satisfied the requirements of the regulation.

CONCLUSION

The petition under 37 C.F.R. §1.137(b) hereby is **granted**.

The instant file is released to Technology Center 2600 for further processing in due course.

Telephone inquiries concerning this decision may be directed to the undersigned at (571) 272-3214.

John J. Gillon, Jr.
Senior Attorney
Office of Petitions

---

[5] See: Diligence in Filing Petitions to Revive and Petitions to Withdraw the Holding of Abandonment, 1124 Off. Gaz. Pat. Office 33 (March 19, 1991). It was and is Petitioner's burden to exercise diligence in seeking either to have the holding of abandonment withdrawn or the application revived. See 1124 Off. Gaz. Pat. Office supra.

[6] Therefore, by example, an unintentional delay in the reply might occur if the reply and transmittal form are to be prepared for shipment by the US Postal Service, but other pressing matters distract one's attention and the mail is not timely deposited for shipment.

UNITED STATES PATENT AND TRADEMARK OFFICE

COMMISSIONER FOR PATENTS
UNITED STATES PATENT AND TRADEMARK OFFICE
P.O. BOX 1450
ALEXANDRIA, VA 22313-1450
www.uspto.gov

Paper No.

TOWNSEND AND TOWNSEND AND CREW, LLP
TWO EMBARCADERO CENTER
EIGHTH FLOOR
SAN FRANCISCO CA 94111-3834

COPY MAILED

AUG 15 2007

OFFICE OF PETITIONS

In re Application of	:	
Zuker et al.	:	DECISION ON APPLICATION
Application No. 10/124,598	:	FOR
Filed: April 16, 2002	:	PATENT TERM ADJUSTMENT
Atty Docket No.02307E-088722US	:	

This is a decision on the "APPLICATION FOR PATENT TERM ADJUSTMENT UNDER 37 C.F.R. § 1.705(b)," filed January 31, 2007. Applicants request that the initial determination under 35 USC 154(b) be corrected from five hundred thirty-nine (539) days to seven hundred thirty-four (734) days.

The application for patent term adjustment is **DISMISSED**.

On December 5, 2006, the Office mailed the Determination of Patent Term Adjustment under 35 U.S.C. 154(b) in the above-identified application. The Notice stated that the patent term adjustment (PTA) to date is 539 days. On January 31, 2007, applicants timely[1] submitted an application for patent term adjustment (with required fee). Applicants assert that the USPTO failed to add the number of days in the period beginning on the date on which a notice of appeal to the Board of Patent Appeals and Interferences was filed under 35 U.S.C. 134 and § 1.191 and the date of the notice of allowance under 35 U.S.C. 151.

The record supports a conclusion that the patent issuing from this application is not subject to a terminal disclaimer.

[1] PALM records indicate that the Issue Fee payment was received on March 8, 2007.

Applicants' arguments have been considered, but not found persuasive. There was no Office delay, within the meaning of 35 U.S.C. 154(b)(1)(A)(ii), in taking action in response to the date on which an appeal was taken in this application.

35 U.S.C. 154(b)(1)(A) provides, in pertinent part, that:

> Subject to the limitations under paragraph (2), if the issue of an original patent is delayed due to the failure of the Patent and Trademark Office to –
>
> ...
>
> (ii) respond to a reply under section 132, or to an appeal taken under section 134, within 4 months after the date on which the reply was filed or the appeal was taken;

37 CFR 1.702(a) provides, in pertinent part that subject to the provisions of 35 U.S.C. 154(b) and this subpart, the term of an original patent shall be adjusted if the issuance of the patent was delayed due to the failure of the Office to:

> (2) Respond to a reply under 35 U.S.C. 132 or to an appeal taken under 35 U.S.C. 134 not later than four months after the date on which the reply was filed or the appeal was taken;

However, as provided in 37 CFR 1.703(a), this period is calculated as:

> (4) The number of days, if any, in the period beginning on the day after the date that is four months after the date an appeal brief in compliance with § 41.37 of this title was filed and ending on the date of mailing of any of an examiner's answer under § 41.39 of this title, an action under 35 U.S.C. 132, or a notice of allowance under 35 U.S.C. 151, whichever occurs first;

Furthermore, as stated in the Final Rule[2],

> Section 1.703(a)(4) also pertains to the provisions of 35 U.S.C. 154(b)(1)(A)(ii). Section 1.703(a)(4) specifies that the period is the number of days, if any, beginning on the day after the date that is four months after the date an appeal brief in compliance with 1.192 was filed and ending on the mailing date of any of an examiner's answer under 1.193, an action under 35 U.S.C. 132, or a notice of allowance under 35 U.S.C. 151, whichever occurs first. As discussed below, the phrase "the date on which" an "appeal was taken" in 35 U.S.C. 154(b)(1)(A)(ii) means the date on which an appeal brief (and not a notice of appeal) was filed. The phrase "appeal brief in compliance with 1.192" requires that:(1) the appeal brief fee (1.17(c)) be paid (1.192(a)); and (2) the appeal brief complies with 1.192(c)(1) through (c)(9). (*See also* the Response to Comment 38).

Applicants are incorrect in calculating a period of adjustment for Office delay from the date of filing of a notice of appeal to the date of mailing of a notice of allowance. In this instance, an appeal brief in compliance with 1.192 was filed on September 6, 2006 and the Office took action in response on December 5, 2006 by mailing a notice of allowance. As this was within four months of the filing of the appeal brief there was no Office delay within the meaning of the statute or the rules.

The determination of patent term adjustment at the time of the mailing of the Notice of Allowance of 539 days is correct.

The Office acknowledges submission of the $200.00 fee set forth in 37 CFR 1.18(e). No additional fees are required.

The application file is being forwarded to the Office of Patent Publication for issuance of the patent. Any further period of adjustment accrued pursuant to 37 CFR 1.702(a)(4) and 1.702(b) will be reflected in the patent term adjustment shown on the issue notification letter mailed approximately three weeks prior to the issuance of the patent.

---

[2] See *Changes to Implement Patent Term Adjustment under Twenty-Year Patent Term; Final Rule*, 65 Fed. Reg. 54366 (September 18, 2000).

Applicants are reminded that if an application is entitled to an adjustment under 35 U.S.C. 154(b)(1)(B), the entire period during which the application was pending (except for periods excluded under 35 U.S.C. 154(b)(1)(B)(i)-(iii)), and not just the period beginning three years after the actual filing date of the application, is the period of delay under 35 U.S.C. 154(b)(1)(B) in determining whether periods of delay overlap under 35 U.S.C. 154(b)(2)(A). Thus, any days of delay for Office issuance of the patent more than 3 years after the filing date of the application which overlap with the days of patent term adjustment accorded prior to the issuance of the patent will not result in any additional patent term adjustment. See 35 U.S.C. 154(b)(1)(B), 35 U.S.C. 154(b)(2)(A), and 37 CFR § 1.703(f). See also *Revision of Patent Term Extension and Patent Term Adjustment Provisions; Final Rule*, 69 Fed. Reg. 21704 (April 22, 2004).

Telephone inquiries specific to this decision should be directed to the undersigned at (571) 272-3219.

Nancy Johnson
Senior Petitions Attorney
Office of Petitions

UNITED STATES PATENT AND TRADEMARK OFFICE

COMMISSIONER FOR PATENTS
UNITED STATES PATENT AND TRADEMARK OFFICE
WASHINGTON, D.C. 20231
www.uspto.gov

Paper No. 6

COPY MAILED

SEP 03 2002

OFFICE OF PETITIONS

SWERNOFSKY LAW GROUP PC
P.O. BOX 390013
MOUNTAIN VIEW CA 94039-0013

In re Application of
Stuart, Germa, and Clark
Application No. 10/124,603
Filed: April 16, 2002
Attorney Docket No. 215.1007.02
For: TRADING PLATFORM USER INTERFACE IN A MANY-TO-MANY HUB

DECISION REFUSING STATUS UNDER 37 CFR 1.47(a)

This is a decision on the petition under 37 CFR 1.47(a), filed August 14, 2002.

The petition under 37 CFR 1.47(a) is **dismissed.**

Any request for reconsideration under this decision must be submitted within TWO (2) MONTHS from the mail date of this decision. Extensions of time under 37 CFR 1.136(a) are permitted. Failure to respond will result in the abandonment of this application. Any response should be titled "Request for Reconsideration of Petition Under 37 CFR 1.47(a).

The instant petition was filed in response to a Notice to File Missing Parts of Nonprovisioanl Application (the "Notice") mailed May 28, 2002. The Notice allowed an extendable period for reply of two months from its mailing date and required that a filing fee and surcharge be paid. Though the Notice did not specifically indicate so, a declaration under 37 CFR 1.63 executed by all named inventors was also missing. On August 14, 2002, petitioner filed the instant petition (along with a request for an extension of the time set for reply within the first month.) Petitioner also filed a declaration executed by two of the named inventors.

A grantable petition under 37 CFR 1.47(a) requires:

(1) proof that the non-signing inventor(s) cannot be reached or refuses to sign the oath or declaration after having been presented with the application papers (specification, claims, and drawings);

(2) an acceptable oath or declaration in compliance with 35 U.S.C. §§ 115 and 116;

(3) the petition fee,

(4) a statement of the last known address of the non-signing inventor,

The instant petition lacks items (1) and (4) as set forth above.

As to item (1), petitioner did not provide sufficient proof that the complete application papers were presented to the non-signing inventor. Section 409.03(d) of the Manual of Patent Examination Procedure provides, in pertinent part, that :

> [w]here a refusal of the inventor to sign the application papers is alleged, the circumstances of the presentation of the application papers and of the refusal must be specified in a statement of facts by the person who presented the inventor with the application papers and/or to whom the refusal was made. Statements by a party not present when an oral refusal is made will not be accepted.
>
> Proof that a bona fide attempt was made to present a copy of the application papers (specification, including claims, drawings, and oath or declaration) to the nonsigning inventor for signature, but the inventor refused to accept delivery or expressly stated that the application papers should not be sent may be sufficient.

Though petitioner does indicate that the non-signing inventor declined to execute the declaration, petitioner does indicate that the non-signing inventor was ever presented with a complete copy of the application papers. It cannot be concluded that the non-signing inventor refused to join the prosecution of the application papers until the non-signing inventor is presented with a complete copy of the application papers or advises that the application papers should not be sent.

As to item (4), neither the petition, or the declaration, state the last known address of the non-signing inventor as is required by 37 CFR 1.47(a). Petitioner may see MPEP, Section 409.03(e) for further guidance on fulfilling this requirement.

Further correspondence with respect to this matter should be addressed as follows:

By mail: Commissioner for Patents
Box DAC
Washington, DC 20231

By FAX: (703) 308-6919
Attn: Office of Petitions

By hand: Crystal Plaza Four, Suite 3C23
2201 South Clark Place
Arlington, Virginia

Telephone inquiries should be directed to the undersigned, at (703) 305-0010.

Kenya A. McLaughlin

Kenya A. McLaughlin
Petitions Attorney
Office of Petitions
Office of the Deputy Commissioner
for Patent Examination Policy

UNITED STATES PATENT AND TRADEMARK OFFICE

COMMISSIONER FOR PATENTS
UNITED STATES PATENT AND TRADEMARK OFFICE
WASHINGTON, D.C. 20231
www.uspto.gov

Paper No. 10

Swernofsky Law Group, PC
PO Box 390013
Mountain View, CA 94039-0013

COPY MAILED

OCT 0 8 2002

OFFICE OF PETITIONS

In re Application of
Stuart, Germa, and Clark
Application No.: 10/124,603
Filed: April 16, 2002
Attorney Docket No: 215.1007.02
For: TRADING PLATFORM USER INTERFACE IN A MANY-TO-MANY HUB

: DECISION ACCORDING
: STATUS UNDER RULE
: 47(a)

This is in response to the renewed petition under 37 CFR 1.47(a), filed September 25, 2002.

The renewed petition is **GRANTED**.

The above-identified application and papers have been reviewed and found in compliance with 37 CFR 1.47(a). This application is hereby accorded Rule 1.47(a) status.

A first petition was filed on August 14, 2002, in response to a "Notice to File Missing Parts of Nonprovisional Application (the "Notice") mailed May 28, 2002. The Notice allowed an extendable period for reply of two months from its mailing date and required that a filing fee and surcharge be paid. Though the Notice did not specifically indicate so, a declaration under 37 CFR 1.63 executed by all named inventors was also missing. The petition of August 14, 2002, was dismissed by a decision mailed September 3, 2002, because petitioner did not provide sufficient proof that the a copy of the complete application was sent to the nonsigning inventor and because petitioner did not state the last known address of the nonsigning inventor. The instant renewed petition was then filed on September 25, 2002.

Petitioner has shown that Mr. Germa has refused to join the filing of the above-identified application after having been presented with the application papers, and the above-identified application and papers have been reviewed and found in compliance with 37 CFR 1.47(a). This application is hereby accorded Rule 1.47(a) status.

As provided in Rule 1.47(c), this Office will forward notice of this application's filing to the non-signing inventor at the address given in the petition. Notice of the filing of this application will also be published in the Official Gazette.

This application will be forwarded to the Office of Initial Patent Examination for further processing.

Telephone inquiries should be directed to Kenya A. McLaughlin, Petitions Attorney, at (703) 305-0010.

Kenya A. McLaughlin

Kenya A. McLaughlin
Supervisory Petitions Examiner
Office of Petitions
Office of the Deputy Commissioner
for Patent Examination Policy

UNITED STATES PATENT AND TRADEMARK OFFICE

COMMISSIONER FOR PATENTS
UNITED STATES PATENT AND TRADEMARK OFFICE
WASHINGTON, D.C. 20231
www.uspto.gov

Eric J. Germa
525 Channing Avenue
Palo Alto, CA 94301

COPY MAILED

OCT 0 8 2002

OFFICE OF PETITIONS

In re Application of
Stuart, Germa, and Clark
Application No. 10/124,603
Filed: April 16, 2002
Attorney Docket Number: 215.1007.02
For: TRADING PLATFORM USER INTERFACE IN A MANY-TO-MANY HUB

LETTER

Dear Mr.Germa:

You are named as a joint inventor in the above-identified United States patent application filed under the provisions of 35 U.S.C. 116 (United States Code) and 37 CFR 1.47(a), Rules of Practice in Patent Cases. Should a patent be granted on the application you will be designated therein as a joint inventor.

As a joint inventor, you are entitled to inspect any paper in the file wrapper of the application, order copies of all or any part thereof (at a prepaid cost per 37 CFR 1.19) or make your position of record in the application. Alternatively, you may arrange to do any of the preceding through a registered patent attorney or agent presenting written authorization from you. If you care to join the application, counsel of record (see below) would presumably assist you. Joining in the application would entail the filing of an appropriate oath or declaration by you pursuant to 37 CFR 1.63.

Telephone inquiries regarding this communication should be directed to Petitions Attorney Kenya A. McLaughlin at (703) 305-0010. Requests for information regarding your application should be directed to the File Information Unit at (703) 308-2733. Information regarding how to pay for and order a copy of the application, or a specific paper in the application, should be directed to Certification Division at (703) 308-9726 or 1-800-972-6382 (outside the Washington D.C. area).

Kenya A. McLaughlin
Petitions Attorney
Office of Petitions
Office of the Deputy Commissioner
for Patent Examination Policy

cc:

Swernofsky Law Group, PC
POBox 390013
Mountain View, CA 94039-013

UNITED STATES PATENT AND TRADEMARK OFFICE

Commissioner for Patents
United States Patent and Trademark Office
P.O. Box 1450
Alexandria, VA 22313-1450
www.uspto.gov

JJGJR.: 09-05

Paper No: __

FULWIDER PATTON
LEE & UTECHT, LLP
200 OCEANGATE, SUITE 1550
LONG BEACH CA 90802

COPY MAILED

SEP 1 2 2005

OFFICE OF PETITIONS

In re Application of	:	
Macoviak, et al.	:	
Application No. 10/124,606	:	DECISION
Filing Date: 16 April, 2002	:	
Attorney Docket No.: CARDE.61152	:	

This is a decision on the petition filed on 24 August, 2005, alleging unintentional delay under 37 C.F.R. §1.137(b).

The petition under 37 C.F.R. §1.137(b) is **GRANTED**.

BACKGROUND

The record reflects that:

- Petitioner failed to reply timely and properly to the non-final Office action mailed on 5 August, 2004, with reply (fees) due absent extension of time on or before 5 November, 2004;
- the application went abandoned after midnight 5 November, 2004;
- the Office mailed the Notice of Abandonment on 22 February, 2005;
- Petitioner filed the instant petition (with fee), an amendment as the reply, and made the statement of unintentional delay.

STATUTES, REGULATIONS AND ANALYSIS

Congress has authorized the Commissioner to "revive an application if the delay is shown to the satisfaction of the Commissioner to have been "unavoidable." 35 U.S.C. §133 (1994).[1]

The regulations at 37 C.F.R. §1.137(a) and (b) set forth the requirements for a petitioner to revive a previously unavoidably or unintentionally, respectively, abandoned application under this congressional grant of authority. The language of 35 U.S.C. §133 and 37 C.F.R. §1.137(a) is clear, unambiguous, and without qualification: the delay in tendering the reply to the outstanding Office action, as well as filing the first petition seeking revival, must have been unavoidable for the reply now to be accepted on petition.[2]

Delays in responding properly raise the question whether delays are unavoidable.[3] Where there is a question whether the delay was unavoidable, Petitioners must meet the burden of establishing that the delay was unavoidable within the meaning of 35 U.S.C. §133 and 37 C.F.R. §1.137(a).[4] And the Petitioner must be diligent in attending to the matter.[5] Failure to do so does not constitute the care required under Pratt, and so cannot satisfy the test for diligence and due care. (By contrast, unintentional delays are those that do not satisfy the very strict statutory and regulatory requirements of unavoidable delay, and also, by definition, are not intentional.[6]))

The requirements for a grantable petition under 37 C.F.R. §1.137(b) are the petition and fee, the statement of unintentional delay (a further showing may be required), a proper reply, and–where appropriate--a terminal disclaimer and fee.

Petitioner has satisfied the requirements of the regulation.

---

[1] 35 U.S.C. §133 provides:
35 U.S.C. §133 Time for prosecuting application.
Upon failure of the applicant to prosecute the application within six months after any action therein, of which notice has been given or mailed to the applicant, or within such shorter time, not less than thirty days, as fixed by the Commissioner in such action, the application shall be regarded as abandoned by the parties thereto, unless it be shown to the satisfaction of the Commissioner that such delay was unavoidable.

[2] Therefore, by example, an unavoidable delay in the payment of the Filing Fee might occur if a reply is shipped by the US Postal Service, but due to catastrophic accident, the delivery is not made.

[3] See: *Changes to Patent Practice and Procedure; Final Rule Notice*, 62 *Fed. Reg.* at 53158-59 (October 10, 1997), 1203 *Off. Gaz. Pat. Office* at 86-87 (October 21, 1997).

[4] See: In re Application of G, 11 USPQ2d 1378, 1380 (Comm'r Pats. 1989).

[5] See: Diligence in Filing Petitions to Revive and Petitions to Withdraw the Holding of Abandonment, 1124 Off. Gaz. Pat. Office 33 (March 19, 1991). It was and is Petitioner's burden to exercise diligence in seeking either to have the holding of abandonment withdrawn or the application revived. See 1124 Off. Gaz. Pat. Office supra.

[6] Therefore, by example, an unintentional delay in the reply might occur if the reply and transmittal form are to be prepared for shipment by the US Postal Service, but other pressing matters distract one's attention and the mail is not timely deposited for shipment.

CONCLUSION

The instant petition under 37 C.F.R. §1.137(b) hereby is **granted**.

The instant application is released to Technology Center 3700 for further processing in due course.

Telephone inquiries concerning this decision may be directed to the undersigned at (571) 272-3214.

John J. Gillon, Jr.
Senior Attorney
Office of Petitions

UNITED STATES PATENT AND TRADEMARK OFFICE

COMMISSIONER FOR PATENTS
UNITED STATES PATENT AND TRADEMARK OFFICE
P.O. BOX 1450
ALEXANDRIA, VA 22313-1450
www.uspto.gov

Maria M Eliseeva
Brown Rudnick Berlack Israels LLP
One Financial Center
18th Floor
Boston, MA 02111

COPY MAILED

MAR 2 3 2004

OFFICE OF PETITIONS

In re Application of :
Dan A. Steinberg :
Application No. 10/124,612 : DECISION REFUSING STATUS
Filed: April 17, 2002 : UNDER 37 CFR 1.47(b)
Attorney Docket No. 2309/19 (ACT-195) :
For: **WET AND DRY ETCHING PROCESS ON <110>** :
SILICON AND RESULTING STRUCTURES :

This is a decision on the petition under 37 CFR 1.47(b), filed August 28, 2002 (certificate of mailing dated August 21, 2002.)

The petition under 37 CFR 1.47(b) is **dismissed.**

Any request for reconsideration under this decision must be submitted within TWO (2) MONTHS from the mail date of this decision. Extensions of time under 37 CFR 1.136(a) are permitted. Failure to respond will result in the abandonment of this application. Any response should be titled "Request for Reconsideration of Petition Under 37 CFR 1.47(b).

The above-identified application was filed on April 17, 2002, without an executed oath or declaration or filing fee. Accordingly, a "Notice to File Missing Parts Nonprovisional Application" (the "Notice") was mailed on May 22, 2002, requiring an executed oath or declaration and a surcharge for the late filing of the oath or declaration, payment of the filing fee, and substitute drawings. The instant petition was filed on August 28, 2002, responsively.

A grantable petition under 37 CFR 1.47(b) requires:

(1) proof that the non-signing inventor(s) cannot be reached or refuses to sign the oath or declaration after having been presented with the application papers (specification, claims, and drawings);

(2) an acceptable oath or declaration in compliance with 35 U.S.C. §§ 115 and 116;

(3) the petition fee,

(4) a statement of the last known address of the non-signing inventor,

(5) proof of proprietary interest, and

(6) a showing (statement) that such action is necessary to preserve the rights of the parties or to prevent irreparable damage.

The instant petition lacks items (1), (2), (3), (4), and (5) as set forth above.

As to item (1), petitioner did not provide sufficient proof that inventor Steinberg has expressly refused to join the application. Although petitioner has provided an e-mail recounting inventor Steinberg's alleged refusal to execute the declaration, petitioner did not provide sufficient details regarding the circumstances of the refusal and did not provide proof that a complete copy of the application papers was presented to inventor Steinberg. Relative to this point, section 409.03(d) of the *Manual of Patent Examining Procedure* provides in pertinent part that:

> [a] refusal by an inventor to sign an oath or declaration when the inventor has not been presented with the application papers does not itself suggest that the inventor is refusing to join the application papers unless it is clear that the inventor understands exactly what he or she is being asked to sign and refuses to accept the application papers. A copy of the application papers should be sent to the last known address of the non-signing inventor.

> When there is an express oral refusal , that fact along with the time and place of the refusal must be stated in the statement of facts.

It is noted that inventor Steinberg is a patent agent and is familiar with the patenting process, however; relative to Mr. Steinberg's role as the sole inventor in this application the Patent and Trademark Office must be sure that Mr. Steinberg is given the opportunity to make an informed decision relative to his decision not to join the prosecution of this application. This assurance can only be garnered if evidence is provided that a complete copy of the application papers was provided to inventor Steinberg. Any renewed petition filed must provide such proof. Further, the e-mail authored by Mr. Sherrer only provides a blanket statement relative to inventor Steinberg's alleged refusal to join the application. As indicated above, where an express refusal is alleged, a statement relaying the time and place of the refusal must be provided. Accordingly, any renewed petition must also be accompanied by a statement to that effect.

As to item (2), petitioner failed to file a proper oath or declaration with the instant petition as required by 37 CFR 1.47. Section 409.03 (b) of the MPEP states, in pertinent part, that:

> [t]he 37 CFR 1.47(b) applicant must make the oath required by 37 CFR 1.63 and 1.54 or 1.175. Where a corporation is the 37 CFR 1.47(b) applicant, an officer (President, Vice-President, Secretary, Treasurer, or Chief Executive Officer) thereof should normally sign the necessary oath or declaration. A corporation may authorize any person including an attorney or agent authorized to practice before the U.S. Patent and Trademark Office, to sign the application oath or declaration on its behalf. Where an oath or declaration is signed by a registered attorney or agent on behalf of a corporation, either proof of the attorney's or agent's authority in the form of a statement signed by an appropriate corporate officer must be submitted, or the attorney or agent my simply state that he or she is authorized to sign on behalf of the corporation.

A review of the application file did not reveal an oath or declaration for the subject application. With any renewed petition filed, petitioner must file a declaration that conforms to the MPEP section cited above.

As to item (3), petitioner is advised that Maria M. Eliseeva is not listed as an authorized user for deposit account 50-0369, therefore; the petition fee of $130.00 could not be charged to that deposit account on Ms. Eliseeva's authorization. Petitioner must either include Ms. Eliseeva as an authorized user on the deposit account or remit the petition fee in another form.

As to item (4), no statement of the last known address for inventor Steinberg was found in the petition. Any renewed petition filed must include such a statement so that the Patent and Trademark Office can provide inventor Steinberg with the notice required under 37 CFR 1.47(c).

As to item (5), petitioner has not satisfactorily demonstrated that the 37 CFR 1.47(b) applicant, Haleos, Inc., has sufficient proprietary interest to proceed with the application on behalf of inventor Steinberg. The *Manual of Patent Examining Procedure*, Section 409.03(f) provides, in pertinent part, that:

> [w]hen an application is deposited pursuant to 37 CFR 1.47(b), the 37 CFR 1.47(b) applicant must prove that, as of the date of the application is deposited in the Patent and Trademark Office,
>
> (A) the invention has been assigned to the applicant, or
>
> (B) the inventor has agreed in writing to assign the invention to the applicant, or
>
> (C) the applicant otherwise has sufficient proprietary interest in the subject matter to justify the filing of the application.
>
> A proprietary interest obtained other than by assignment or agreement to assign may be demonstrated by an appropriate legal memorandum to the effect that a court of competent jurisdiction (federal, state, or foreign) would by the weight of authority in that jurisdiction award title of the invention to the 37 CFR 1.47(b) applicant. The facts in support of any conclusion that a court would award title to the 37 CFR 1.47(b) applicant should be made of record by way of an affidavit or declaration of the same person having firsthand knowledge of the same. The legal memorandum should be prepared and signed by an attorney at law familiar with the law of the jurisdiction involved.

Although petitioner has indicated that inventor Steinberg was required to assign his interest in the application to Haleos, Inc, no documentary evidence of such assignment or written agreement of his obligation to assign the application was found among the petition papers. Any renewed petition must be accompanied by documentary proof of the 37 CFR 1.47(b) applicant's proprietary interest .

It is also noted that the "Notice to File Missing Parts of Non-Provisional Application" required substitute drawings to be filed. Substitute drawings were not found among the petition papers. Petitioner must file substitute drawings with any renewed petition filed, or risk abandonment of

the application for non-compliance with "Notice to File Missing Parts of Non-Provisional Application."

Further correspondence with respect to this matter should be addressed as follows:

By mail: Mail Stop Petitions
Commissioner for Patents
P.O. Box 1450
Alexandria, VA 22313-1450

By FAX: (703) 872-9306
Attn: Office of Petitions

Telephone inquiries should be directed to the undersigned at (703) 305-0010.

Kenya A. McLaughlin

Kenya A. McLaughlin
Petitions Attorney
Office of Petitions

UNITED STATES PATENT AND TRADEMARK OFFICE

Commissioner for Patents
United States Patent and Trademark Office
P.O. Box 1450
Alexandria, VA 22313-1450
www.uspto.gov

Jonathan D. Baskin
EDWARDS & ANGELL, LLP
P.O. Box 9169
Boston, MA 02205

COPY MAILED
JUL 1 5 2004
OFFICE OF PETITIONS

In re Application of
Dan A. Steinberg
Application No.: 10/124,612
Filed: April 17, 2002
Attorney Docket No: 2309/19 (ACT-195)
FOR: Wet and Dry Etching Process on <110> Silicon and Resulting Structures

: DECISION NOTING JOINDER

This is in response to the renewed petition filed June 14, 2004, noting the joinder of inventor Steinberg in the above-cited application.

In view of the joinder of the inventor, further consideration under 37 CFR 1.47(a) is not necessary. This application does not have any Rule 1.47(a) status and no such status should appear on the file wrapper. This application need not be returned to this Office for further consideration under 37 CFR 1.47(a).

The Manual of Patent Examining Procedure ("MPEP"), § 409.03(j) provides that "[i]n the event the previously nonsigning inventor decides to join the application by filing an executed oath or declaration complying with 37 CFR 1.63, the oath or declaration will be placed in the application file."

Accordingly, the declaration for inventor Steinberg has been entered and made of record.

This application is being forwarded to the Office of Initial Patent Examination for further processing.

Telephone inquiries should be directed to the undersigned at (703) 305-0010.

Kenya A. McLaughlin

Kenya A. McLaughlin
Petitions Attorney
Office of Petitions

UNITED STATES PATENT AND TRADEMARK OFFICE

Commissioner for Patents
United States Patent and Trademark Office
Washington, D.C. 20231
www.uspto.gov

Paper No. 5

KLARQUIST SPARKMAN, LLP
One World Trade Center, Suite 1600
121 S.W. Salmon Street
Portland, OR 97204

COPY MAILED

JAN 1 0 2003

OFFICE OF PETITIONS

In re Application of
Byeongmoon Jeong and
Anna Gutowska
Application No. 10/124,614
Filed: April 16, 2002
Title: THERMOGELLING OLIGOPEPTIDE POLYMERS

DECISION ACCORDING STATUS UNDER 37 C.F.R. §1.47(a)

This is in response to the Petition under 37 C.F.R. §1.47(a), filed August 26, 2002.

The petition is **GRANTED**.

The above-identified application was filed on April 16, 2002, without an executed oath or declaration, missing the statutory basic filing fee and with additional claim fees due. Byeongmoon Jeong and Anna Gutowska were identified as joint inventors. Accordingly, on May 7, 2002, applicants were mailed a "Notice to File Missing Parts of Application," requiring the missing items and a surcharge for late filing. This Notice set a period for reply of two months from the mailing date of the notice, with extensions of time obtainable under §1.136(a).

In response, rule 47 applicant filed *inter alia* a declaration executed by joint inventor Gutowska on behalf of herself and on behalf of nonsigning inventor Jeong, with the instant petition (and fee); the surcharge for late filing under 1.16(e); and the outstanding filing and claim fees. This response was made timely by an accompanying petition and fee for a two-month extension of time. Rule 47 applicants maintain that status under §1.47(a) is proper because inventor Jeong has refused to join in the application.

In support thereof, applicants submitted a statement of facts of Robert Silva, Jr., detailing the circumstances of inventor Jeong's refusal to sign the declaration for patent. Therein, Mr. Silva specifically states that on July 5, 2002, inventor Jeong orally refused to sign the declaration. The evidence submitted on petition also includes copies of: a first declaration for patent signed by inventor Jeong on April 22, 2002, showing that inventor Jeong is aware of the application to which the relevant declaration is directed; a first assignment signed by inventor Jeong on April 22, 2002, but considered defective by applicants as it was not signed before a Notary Public; letters sent to inventor Jeong, requesting his presence to sign a new assignment (and new declaration) before a Notary Public; and an E-mail from the nonsigning inventor supporting a

conclusion that inventor Jeong refuses to join in the application.

Having considered the evidence, it is concluded that applicants have shown that inventor Jeong has refused to join in the application. The declaration filed August 26, 2002, and the petition have been reviewed and found in compliance with 37 C.F.R. §§1.63 and 1.47(a). Inventor Jeong's last known address is understood to be as stated in the declaration[1].

This application is hereby accorded Rule 1.47(a) status.

As provided in new Rule 1.47(c), this Office will forward notice of this application's filing to the non-signing inventor at the address given in the petition. Notice of the filing of this application will also be published in the Official Gazette.

The application file is being returned to the Office of Initial Patent Examination for completion of pre-examination processing.

Telephone inquiries regarding this decision should be directed to the undersigned at (703) 305-0309.

Nancy Johnson
Petitions Attorney
Office of Petitions
Office of the Deputy Commissioner
for Patent Examination Policy

[1] The last known address expressly set forth on petition is a business address and does not appear by the other evidence of record (i.e., the mailings by assignee to Dr. Jeong at his residence) to be the address where he customarily receives mail.

UNITED STATES PATENT AND TRADEMARK OFFICE

Commissioner for Patents
United States Patent and Trademark Office
Washington, D.C. 20231
www.uspto.gov

DR. BYEONGMOON JEONG
2651 SANDSTONE LANE
RICHLAND, WA 99352

COPY MAILED

JAN 1 0 2003

LETTER OFFICE OF PETITIONS

In re Application of :
Byeongmoon Jeong and Anna Gutowska :
Application No. 10/124,614 :
Filed: April 16, 2002 :
Title: THERMOGELLING OLIGOPEPTIDE :
POLYMERS :

Dear Dr. Jeong:

You are named as a joint inventor in the above-identified United States patent application filed under the provisions of 35 U.S.C. 116 (United States Code) and 37 CFR 1.47(a), Rules of Practice in Patent Cases. Should a patent be granted on the application you will be designated therein as a joint inventor.

As a named inventor you are entitled to inspect any paper in the file wrapper of the application, order copies of all or any part thereof (at a prepaid cost per 37 CFR 1.19) or make your position of record in the application. Alternatively, you may arrange to do any of the preceding through a registered patent attorney or agent presenting written authorization from you. If you care to join the application, counsel of record (see below) would presumably assist you. Joining in the application would entail the filing of an appropriate oath or declaration by you pursuant to 37 CFR 1.63.

Telephone inquiries regarding this communication should be directed to Petitions Attorney Nancy Johnson at (703) 305-0309. Requests for information regarding your application should be directed to the File Information Unit at (703) 308-2733. Information regarding how to pay for and order a copy of the application, or a specific paper in the application, should be directed to the Certification Division at (703) 308-9726 or 1-800-972-6382 (outside the Washington D.C. area).

Nancy Johnson

Nancy Johnson
Petitions Attorney
Office of Petitions
Office of the Deputy Commissioner
for Patent Examination Policy

LISA CALDWELL
KLARQUIST SPARKMAN, LLP
One World Trade Center, Suite 1600
121 S.W. Salmon Street
Portland, OR 97204

UNITED STATES PATENT AND TRADEMARK OFFICE

COMMISSIONER FOR PATENTS
UNITED STATES PATENT AND TRADEMARK OFFICE
P.O. BOX 1450
ALEXANDRIA, VA 22313-1450
www.uspto.gov

Paper No. 11

LAW OFFICES OF JOHN A. PARRISH
TWO BALA PLAZA
SUITE 300
BALA CYNWYD, PA 19004

COPY MAILED

FEB 27 2004

OFFICE OF PETITIONS

In re Application of
Kenji Uchino et al
Application No. 10/124,619
Filed: April 16, 2002
Attorney Docket No. PSU 009.1

: DECISION ON PETITION
: UNDER 37 CFR 1.78(a)(6)

This is a decision on the petition under 37 CFR 1.78(a)(6), filed August 7, 2003, and supplemented on February 25, 2004, to accept an unintentionally delayed claim under 35 U.S.C. §119(e) for the benefit of prior-filed provisional Application No. 60/255,579, filed December 14, 2000.

The petition is **Granted.**

A petition under 37 CFR 1.78(a)(6) is only applicable to those applications filed on or after November 29, 2000. Further, the petition is appropriate only after expiration of the period specified in 37 CFR 1.78(a)(5)(ii) and must be filed during the pendency of the nonprovisional application. In addition, the petition must be accompanied by:

(1) the surcharge set forth in 37 CFR 1.17(t);

(2) a statement that the entire delay between the date the claim was due under 37 CFR 1.78(a)(5)(ii) and the date the claim was filed was unintentional; and

(3) the reference to the prior-filed provisional application supplied in an application data sheet (ADS)(37 CFR 1.76) or as an amendment in the first sentence of the specification following the title. *See* 35 U.S.C. 119(e) and 37 CFR 1.78(a)(5)(iii). The Commissioner may require additional information where there is a question whether the delay was unintentional.

The instant pending nonprovisional application was filed on April 16, 2002. Intermediate PCT Application No. PCTUS01/47950, was filed December 13, 2001, and was filed within twelve months of the filing date of the prior-filed provisional application, Application No. 60/255,579, which was filed on December 14, 2000, for which priority is claimed. A reference to the prior-filed provisional application has been included in an amendment to the first sentence of the specification following the title.

The instant nonprovisional application was filed after November 29, 2000, and the claim for priority herein is submitted after expiration of the period specified in 37 CFR 1.78(a)(5)(ii). Also, the reference to the prior-filed provisional application was submitted during the pendency of the nonprovisional application for which the benefit is sought. *See* 35 U.S.C. §119(e). Accordingly, having found that the instant petition satisfies the conditions of 37 CFR 1.78(a)(6) for acceptance of an unintentionally delayed claim for priority under 35 U.S.C. §119(e), the petition to accept an unintentionally delayed claim of benefit to prior-filed provisional Application No. 60/255,579 is granted.

The granting of the petition to accept the delayed benefit claim to the prior-filed application under 37 CFR 1.78(a)(6) should not be construed as meaning that the instant application is entitled to the benefit of the filing date of the prior-filed application. In order for the instant application to be entitled to the benefit of the prior-filed application, all other requirements under 35 U.S.C. §119(e) and 37 CFR 1.78(a)(4) and (a)(5) must be met. Similarly, the fact that the corrected Filing Receipt accompanying this decision on petition includes the prior-filed application should not be construed as meaning that applicant is entitled to the claim for benefit of priority to the prior-filed application noted thereon. Accordingly, the examiner will, in due course, consider this benefit claim and determine whether the instant application is entitled to the benefit of the earlier filing date.

A corrected Filing Receipt, which includes the priority claim to the prior-filed provisional application, accompanies this decision on petition.

Any inquiries concerning this decision may be directed to Karen Creasy at (703) 305-8859.

The application is being forwarded to Technology Center AU 1755 for processing the amendment submitted August 7, 2003, and for consideration by the examiner of the claim under 35 U.S.C. §119(e) for the benefit of priority to prior-filed provisional Application No. 60/255,579, filed December 14, 2000, and for appropriate action on the response received September 5, 2003, to the nonfinal rejection of June 2, 2003.

Frances Hicks

Frances Hicks
Lead Petitions Examiner
Office of Petitions
Office of the Deputy Commissioner
for Patent Examination Policy

ATTACHMENT: Corrected Filing Receipt

UNITED STATES PATENT AND TRADEMARK OFFICE

Commissioner for Patents
United States Patent and Trademark Office
P.O. Box 1450
Alexandria, VA 22313-1450
www.uspto.gov

Kevin W. Guynn
SONNENSCHEIN NATH & ROSENTHAL
Wacker Drive Station, Sears Tower
P.O. Box #061080
Chicago, IL 60606-1080

MAILED

MAR 18 2010

OFFICE OF PETITIONS

In re Patent No. 6,786,075 :
Issue Date: September 7, 2004 :
Application No. 10/124,677 : ON PETITION
Filed: April 17, 2002 :
Attorney Docket No. 09794829-0051 :

This is a decision on the petition under 37 CFR 1.377, filed April 10, 2009, to accept and record a maintenance fee for the above-identified patent.

Petitioner states "Patentees paid the 4th year maintenance fee on 3/7/2008 as a small entity (See attached Maintenance fee Statement). Patentees then determined that the application was not entitled to small entity status. On 5/30/2008, patentees filed a petition to correct entity status and correction of fee payments including maintenance fee payment. (see attached Petition). The petition included an authorization to charge the large entity maintenance fee and grace period fee to deposit account no. 07-2069. As such, the 4th year maintenance fee was timely paid. The petition was granted on 10/06/2008 (see attached Copy of Granted Petition). The attorney's deposit account was then charged for the large entity maintenance fee. (see attached October Deposit Account Statement)."

A review of the record shows that petitioner submitted $465 for the small entity 3 ½ year maintenance fee on March 7, 2008. On May 30, 2008, petitioner filed a "PETITION TO CORRECT ENTITY STATUS and CORRECTION OF FEE PAYMENTS INCLUDING MAINTENANCE FEE PAYMENT." On October 6, 2008, a Notice accepting the fee deficiency under 37 CFR 1.28(c) was accepted, large entity fees were applied and status as a small entity for the above patent was removed. However, for some unknown reason, when the fees were adjusted to large entity status, the patent became expired at no fault of petitioner. Therefore, the present petition under 37 CFR 1.377 is hereby **granted** and the patent is reinstated.

The patent file is being forwarded to Files Repository.

Telephone inquiries concerning this decision should be directed to the undersigned at (571) 272-3226.

Andrea Smith
Petitions Examiner
Office of Petitions

UNITED STATES PATENT AND TRADEMARK OFFICE

COMMISSIONER FOR PATENTS
UNITED STATES PATENT AND TRADEMARK OFFICE
P.O. BOX 1450
ALEXANDRIA, VA 22313-1450
www.uspto.gov

MAILED

JUN 22 2006

Technology Center 2100

Christopher P. Rauch
Sonnenschein Nath & Rosenthal, LLP
For Sun Microsystems
P.O. Box 061080
Wacker Drive Station, Sears Tower
Chicago, IL 60606-1080

In re Application of: Michael L. BOUCHER Application No. 10/124,681 Attorney Docket No. 30014200-1026 Filed: April 17, 2002 For: FAST RETRIEVAL OF DATA STORED IN METADATA	DECISION ON PETITION TO WITHDRAW HOLDING OF ABANDONMENT UNDER 37 CFR §1.181

This is a decision on the petition to withdraw the holding of abandonment, under 37 CFR §1.181, filed on July 5, 2005, for failure to timely respond the non-final Office action mailed September 21, 2004.

The non-final Office action, mailed September 21, 2004, set a three-month shortened statutory period for response. A response with amendment, remarks and request for a three-month extension of time under 37 CFR § 1.136 was filed on March 25, 2005, along with a certificate of mailing on March 19, 2005. In response to the March 19, 2005 amendment, a final Office action was mailed on July 1, 2005. Note, contrary to Petitioner's statement that a notice of abandonment dated June 1, 2005 was mailed, no notice appears to be of record in the instant application. Thereafter, a request for continued examination (RCE) was filed on October 6, 2005. As such, the amendment and response filed March 19, 2005 was timely filed and treated accordingly by the Examiner. The instant application is pending before the Office (current status under final rejection, mailed June 12, 2006).

Since evidence already of record indicates that a response was timely filed, the petition is **DISMISSED as MOOT.**

As a courtesy, Applicant should be made aware of a discrepancy between the evidence of timely submission of the amendment found in the original response papers already of record and the evidence provided with the instant petition. The response of record indicates a timely certificate of mailing under 37 CFR § 1.8 on March 19, 2005 of the amendment whereas the evidence provided with the instant petition bears an untimely certificate of mailing date of March 22, 2005 of the amendment.

Brian L. Johnson
Special Programs Examiner
Technology Center 2100
Computer Architecture, Software, and Information Security
571-272-3595

UNITED STATES PATENT AND TRADEMARK OFFICE

Commissioner for Patents
United States Patent and Trademark Office
P.O. Box 1450
Alexandria, VA 22313-1450
www.uspto.gov

SHERIDAN ROSS PC
1560 BROADWAY, SUITE 1200
DENVER, CO 80202

COPY MAILED

JUL 29 2005

OFFICE OF PETITIONS

In re Application of	:	
Michael Guest	:	
Application No. 10/124,682	:	DECISION ON PETITION
Filed: April 16, 2002	:	UNDER 37 CFR 1.313(c)(2)
Patent No. 6,871,371	:	
Issue Date: March 29, 2005	:	
Attorney Docket No. 2651-192	:	

This is a decision on the petition under 37 CFR 1.313(c)(2), filed March 29, 2005, to withdraw the above-identified application from issue after payment of the issue fee.

The petition is **DISMISSED as moot**.

Unfortunately, the instant petition was not brought to the attention of the deciding official's office until after issuance of this application into a patent. Accordingly, as the patent has issued, the petition to withdraw from issue cannot be granted.

Petitioner's attention is directed to 37 CFR 1.313(d), which states:

> A petition under this section will not be effective to withdraw the application from issue unless it is actually received and granted by the appropriate officials **before the date of issue**.

See also Revised Procedures for Papers Requiring Immediate Attention, Official Gazette, of February 24, 2004; and Centralized Delivery and Facsimile Transmission Requirements for Patent Application Related Correspondence, Official Gazette of October 28, 2003.

Since this application has issued, the concurrently filed request for continued examination (RCE) is improper and will not be processed. No fees for the RCE or the petition to withdraw from issue have been assessed to petitioner's deposit account.

The Information Disclosure Statement has been placed in the file of the above-identified application without further consideration. See 37 CFR 1.97(i).

Telephone inquiries should be directed to the undersigned at (571) 272-3218.

Frances Hicks
Petitions Examiner
Office of Petitions

UNITED STATES DEPARTMENT OF COMMERCE
Patent and Trademark Office
Address: COMMISSIONER OF PATENTS AND TRADEMARKS
Washington, D.C. 20231

SERIAL NUMBER	REQUEST DATE	FIRST NAMED APPLICANT	ATTORNEY DOCKET NO.
P-106,065	**6/20/02**	**MCKAY, ET AL**	**100516-00001**

Title: **DIRECT INJECTION OF FLUIDS IN INTERNAL COMBUSTION ENGINES**

Art Unit	Paper Number

Correspondence Address:
ROBERT B. MURRAY
ARENT FOX KINTNER PLOTKIN & KAHN, LLP
1050 CONNECTICUT AVE. NW
SUITE 600
WASHINGTON, DC 20005-5701

Licensee under 35 U.S.C. 184 is hereby granted to file in any foreign country a patent application and any amendments thereto corresponding to the subject matter of this U.S. application identified above and/or any material accompanying the petition. This license is conditioned upon modification of any applicable secrecy order and is subject to revocation without notice.

License Number: 529,273
Grant Date: 01-Aug-02

This license is granted retroactively to the date(s) and the country(s) indicated on the attached decision.

Approved:
for Commissioner of Patents and Trademarks

This license empowers the filing, the causation and the authorization of the filing of a foreign application or applications on the subject matter identified above, subsequent forwarding of all duplicate and formal papers and the prosecution of such aplication or applications.

This license is granted under 37 CFR 5.15(a)

This license is to be retained by the licensee and may be used at anytime on or after the date thereof. This license is not retroactive unless specifically indicated.

The grant of this license does not in any way lesson the responsibility of the licensee for the security of the subject matter as imposed by any Government contract or the provisions of existing laws relating to espionage and the national security or the export of technical data. Licensees should apprise themselves of current regulations, especially with respecct to certain countries, of other agencies, particularly the Department of the Treasury; Office of Munitions Control, Department of State (with respect to Arms, Munitions and Implements of War); the Bureau of Trade Regulation, Office of Export Adminstration, Department of Commerce; and the Department of Energy.

LICENSE FOR FOREIGN FILING

[Title 35, United States Code (1952) Sections 184, 185, 186]

UNITED STATES PATENT AND TRADEMARK OFFICE

COMMISSIONER FOR PATENTS
UNITED STATES PATENT AND TRADEMARK OFFICE
WASHINGTON, D.C. 20231
www.uspto.gov

In re:	McKay et al.	:DECISION ON REQUEST
Petition No.:	P-106,065	:UNDER 37 CFR 5.25
Petition Filing Date:	June 20, 2002	

Title: DIRECT INJECTION OF FLUIDS IN INTERNAL COMBUSTION ENGINES

This is a decision on the petition for retroactive foreign filing license.

It has been determined that a retroactive license for foreign filing under 35 U.S.C. 184 be granted with respect to the filing(s) listed below. The petition complies with 37 C.F.R. 5.25 in that there is an adequate showing that the subject matter in question was not under secrecy order, that the license was diligently sought, and that the material was filed abroad without the required license under 37 C.F.R 5.11 through error and without deceptive intent.

Country	Date
Australia	October 18, 1999

Yvonne R. Abbott
Patent Examiner
(703) 308-2866

UNITED STATES PATENT AND TRADEMARK OFFICE

Commissioner for Patents
United States Patent and Trademark Office
P.O. Box 1450
Alexandria, VA 22313-1450
www.uspto.gov

MAIL

DEC 3 0 2004

DIRECTOR OFFICE
TECHNOLOGY CENTER 2100

SHOOK, HARDY & BACON, L.L.P.
CHASE TOWER, SUITE 1600
600 TRAVIS STREET
HOUSTON, TX 77002-2911

In re Application of: Callegari
Application No. 10/124,778
Filed: April 17, 2002
For: VOLUME BODY RENDERER

DECISION ON PETITION
TO MAKE SPECIAL
UNDER M.P.E.P. §708.02 (VI)

This is a response to the petition filed October 14, 2004, under 37 C.F.R. §1.102(c) and M.P.E.P. §708.02 (VI): Energy, to make the above-identified application special.

The Petition is **DISMISSED**.

M.P.E.P. §708.02, Section VI which sets out the prerequisites for a grantable petition for Advanced Examination under 37 C.F.R. §1.102(c) states in relevant part:

A new application (one which has not received any examination by the examiner) may be granted special status provided that applicant (and this term includes applicant's attorney or agent) complies with one of the following items:

(a) Submits a petition showing how the invention materially contributes to the discovery or development of energy resources.

(b) Submits a petition showing how the invention materially contributes to the more efficient utilization and conservation of energy resources, such as inventions relating to the reduction of energy consumption in combustion systems, industrial equipment, household appliances, etc.

The petition filed October 14, 2004 fails to adequately meet either of the requirements above. Neither the statement in the petition nor the claims in the application make it clear how interpreting and visualizing the data leads to a discovery or development in hydrocarbon resources. Further details on how the invention contributes to the discovery or development is required.

Petition to Make Special **DISMISSED**.

Petitioner is given one opportunity to perfect the petition. Any request for reconsideration must be filed within TWO MONTHS of the mail date of this decision.

Until the renewed petition is submitted, the application will be returned to the examiner's docket to await treatment on the merits in the normal order of examination.

12/10/04

Brian L. Johnson
Special Program Examiner
Technology Center 2100
Computer Architecture, Software and Information Security
571-272-3595

MBS

UNITED STATES PATENT AND TRADEMARK OFFICE

COMMISSIONER FOR PATENTS
UNITED STATES PATENT AND TRADEMARK OFFICE
P.O. BOX 1450
ALEXANDRIA, VA 22313-1450
www.uspto.gov

CRAIN CATON & JAMES
FIVE HOUSTON CENTER
1401 MCKINNEY, SUITE 1700
HOUSTON TX 77010

MAILED

SEP 3 0 2005

Technology Center 2100

In re Application of: CALLEGARI
Application No. 10/124,778
Filed: April 17, 2002
For: VOLUME BODY RENDERER

DECISION ON PETITION
TO MAKE SPECIAL
(ACCELERATED EXAMINATION)
UNDER M.P.E.P. §708.02 (VIII)

This is a response to the renewed petition filed 29 August 2005 under 37 C.F.R. §1.102(c) and M.P.E.P. §708.02 (VI): Energy, to make the above-identified application special. The renewed petition was filed in response to a dismissal of the original petition filed 14 October 2004.

The renewed petition is **DISMISSED as untimely**.

Any response to the petition decision was due 28 February 2005. The renewed petition was filed 29 August 2005. Petitioner asserts that he never received the Decision mailed 30 December 2004. However, no evidence has been provided to establish that the Decision was not received at the address to which it was properly mailed.

The application will be returned to the examiner's docket to await treatment on the merits in the normal order of examination.

Pinchus M. Laufer
Special Program Examiner
Technology Center 2100
Computer Architecture, Software and Information Security
571-272-3599

ds

SPE RESPONSE FOR CERTIFICATE OF CORRECTION

Paper No.: _____

DATE : 04-18-09

TO SPE OF : ART UNIT 2123

SUBJECT : Request for Certificate of Correction for Appl. No.: 10/124778 Patent No.: 7412363

Please respond to this request for a certificate of correction within 7 days.

FOR IFW FILES:

Please review the requested changes/corrections as shown in the **COCIN** document(s) in the IFW application image. No new matter should be introduced, nor should the scope or meaning of the claims be changed.

Please complete the response (see below) and forward the completed response to scanning using document code **COCX**.

FOR PAPER FILES:

Please review the requested changes/corrections as shown in the attached certificate of correction. Please complete this form (see below) and forward it with the file to:

Certificates of Correction Branch (CofC)
South Tower - 9A22
Palm Location 7580

Angela Green
Certificates of Correction Branch
703-308-9390 ext. _____

Thank You For Your Assistance

The request for issuing the above-identified correction(s) is hereby:
Note your decision on the appropriate box.

- ☑ **Approved** — **All** changes apply.
- ☐ **Approved in Part** — Specify below which changes **do not** apply.
- ☐ **Denied** — State the reasons for denial below.

Comments: _____

PAUL RODRIGUEZ
SUPERVISORY PATENT EXAMINER
TECHNOLOGY CENTER 2100
SPE

2123
Art Unit

PTO/SB/66 (03-09)
Approved for use through 03/31/2012. OMB 0651-0016
U.S. Patent and Trademark Office: U.S. DEPARTMENT OF COMMERCE
Under the Paperwork Reduction Act of 1995, no persons are required to respond to a collection of information unless it displays valid OMB control number.

PETITION TO ACCEPT UNINTENTIONALLY DELAYED PAYMENT OF MAINTENANCE FEE IN AN EXPIRED PATENT (37 CFR 1.378(c))

Patent Number	Issue Date (YYYY-MM-DD)	Application Number	Filing Date (YYYY-MM-DD)	Docket Number (if applicable)
6910968	2005-06-28	10/124,803	2002-04-18	

CAUTION: Maintenance fee (and surcharge, if any) payment must correctly identify: (1) the patent number and (2) the application number of the actual U.S. application leading to issuance of that patent to ensure the fee(s) is/are associated with the correct patent. 37 CFR 1.366(c) and (d).

SMALL ENTITY
☒ Patentee claims, or has previously claimed, small entity status. See 37 CFR 1.27.

LOSS OF ENTITLEMENT TO SMALL ENTITY STATUS
☐ Patentee is no longer entitled to small entity status. See 37 CFR 1.27(g)

NOT Small Entity		Small Entity	
Fee	Code	Fee	Code
○ 3 ½ year	(1551)	◉ 3 ½ year	(2551)
○ 7 ½ year	(1552)	○ 7 ½ year	(2552)
○ 11 ½ year	(1553)	○ 11 ½ year	(2553)

SURCHARGE
The surcharge required by 37 CFR 1.20(i)(2) (Fee Code 1558) must be paid as a condition of accepting unintentionally delayed payment of the maintenance fee.

MAINTENANCE FEE (37 CFR 1.20(e)-(g))
The appropriate maintenance fee must be submitted with this petition.

STATEMENT
THE UNDERSIGNED CERTIFIES THAT THE DELAY IN PAYMENT OF THE MAINTENANCE FEE TO THIS PATENT WAS UNINTENTIONAL

PETITIONER(S) REQUEST THAT THE DELAYED PAYMENT OF THE MAINTENANCE FEE BE ACCEPTED AND THE PATENT REINSTATED

THIS PORTION MUST BE COMPLETED BY THE SIGNATORY OR SIGNATORIES

37 CFR 1.378(d) states: "Any petition under this section must be signed by an attorney or agent registered to practice before the Patent and Trademark Office, or by the patentee, the assignee, or other party in interest."

I certify, in accordance with 37 CFR 1.4(d)(4) that I am

◉ An attorney or agent registered to practice before the Patent and Trademark Office

○ A sole patentee

○ A joint patentee; I certify that I am authorized to sign this submission on behalf of all the other patentees.

○ A joint patentee; all of whom are signing this e-petition

○ The assignee of record of the entire interest

Patent Practitioner			
A signature of the applicant or representative is required in accordance with 37 CFR 1.33 and 10.18. Please see 37 CFR 1.4(d) for the form of the signature			
Signature	/jmf/	Date (YYYY-MM-DD)	2010-06-24
Name	Jeffrey M. Furr	Registration Number	38146

This collection of information is required by 37 CFR 1.378(c). The information is required to obtain or retain a benefit by the public which is to file (and by the USPTO to process) an application. Confidentiality is governed by 35 U.S.C. 122 and 37 CFR 1.11 and 1.14. This collection is estimated to take 1 hour to complete, including gathering, preparing, and submitting the completed application form to the USPTO. Time will vary depending upon the individual case. Any comments on the amount of time you require to complete this form and/ or suggestions for reducing this burden, should be sent to the Chief Information Officer, U.S. Patent and Trademark Office, U.S. Department of Commerce, P.O. Box 1450, Alexandria, VA 22313-1450. DO NOT SEND FEES OR COMPLETED FORMS TO THIS ADDRESS. **This form can only be used when in conjunction with EFS-Web. If this form is mailed to the USPTO, it may cause delays in reinstating the patent.**

Privacy Act Statement

The Privacy Act of 1974 (P.L. 93-579) requires that you be given certain information in connection with your submission of the attached form related to a patent application or patent. Accordingly, pursuant to the requirements of the Act, please be advised that: (1) the general authority for the collection of this information is 35 U.S.C. 2(b)(2); (2) furnishing of the information solicited is voluntary; and (3) the principal purpose for which the information is used by the U.S. Patent and Trademark Office is to process and/or examine your submission related to a patent application or patent. If you do not furnish the requested information, the U.S. Patent and Trademark Office may not be able to process and/or examine your submission, which may result in termination of proceedings or abandonment of the application or expiration of the patent.

The information provided by you in this form will be subject to the following routine uses:

1. The information on this form will be treated confidentially to the extent allowed under the Freedom of Information Act (5 U.S.C. 552) and the Privacy Act (5 U.S.C. 552a). Records from this system of records may be disclosed to the Department of Justice to determine whether the Freedom of Information Act requires disclosure of these records.

2. A record from this system of records may be disclosed, as a routine use, in the course of presenting evidence to a court, magistrate, or administrative tribunal, including disclosures to opposing counsel in the course of settlement negotiations.

3. A record in this system of records may be disclosed, as a routine use, to a Member of Congress submitting a request involving an individual, to whom the record pertains, when the individual has requested assistance from the Member with respect to the subject matter of the record.

4. A record in this system of records may be disclosed, as a routine use, to a contractor of the Agency having need for the information in order to perform a contract. Recipients of information shall be required to comply with the requirements of the Privacy Act of 1974, as amended, pursuant to 5 U.S.C. 552a(m).

5. A record related to an International Application filed under the Patent Cooperation Treaty in this system of records may be disclosed, as a routine use, to the International Bureau of the World Intellectual Property Organization, pursuant to the Patent Cooperation Treaty.

6. A record in this system of records may be disclosed, as a routine use, to another federal agency for purposes of National Security review (35 U.S.C. 181) and for review pursuant to the Atomic Energy Act (42 U.S.C. 218(c)).

7. A record from this system of records may be disclosed, as a routine use, to the Administrator, General Services, or his/her designee, during an inspection of records conducted by GSA as part of that agency's responsibility to recommend improvements in records management practices and programs, under authority of 44 U.S.C. 2904 and 2906. Such disclosure shall be made in accordance with the GSA regulations governing inspection of records for this purpose, and any other relevant (i.e., GSA or Commerce) directive. Such disclosure shall not be used to make determinations about individuals.

8. A record from this system of records may be disclosed, as a routine use, to the public after either publication of the application pursuant to 35 U.S.C. 122(b) or issuance of a patent pursuant to 35 U.S.C. 151. Further, a record may be disclosed, subject to the limitations of 37 CFR 1.14, as a routine use, to the public if the record was filed in an application which became abandoned or in which the proceedings were terminated and which application is referenced by either a published application, an application open to public inspections or an issued patent.

9. A record from this system of records may be disclosed, as a routine use, to a Federal, State, or local law enforcement agency, if the USPTO becomes aware of a violation or potential violation of law or regulation.

UNITED STATES PATENT AND TRADEMARK OFFICE

Commissioner for Patents
United States Patent and Trademark Office
P.O. Box 1450
Alexandria, VA 22313-1450
www.uspto.gov

In re Patent No. 6910968
Issue Date: June 28,2005
Application No. 10124803
Filed: April 18,2002
Attorney Docket No.

:
:DECISION GRANTING PETITION
:UNDER 37 CFR 1.378(c)
:

This is a decision on the electronic petition, filed June 24,2010 ,under 37 CFR 1.378(c) to accept the unintentionally delayed payment of the 3.5 year maintenance fee for the above-identified patent.

The petition is **GRANTED**.

The maintenance fee is accepted, and the above-identified patent reinstated as of June 24,2010 .
This decision also constitutes notice that the fee has been accepted. An electronic copy of the petition and this decision has been created as an entry in the Image File Wrapper. Nevertheless, petitioner should print and retain an independent copy.

Telephone inquiries related to this electronic decision should be directed to the Electronic Business Center at 1-866-217-9197.

UNITED STATES PATENT AND TRADEMARK OFFICE

COMMISSIONER FOR PATENTS
UNITED STATES PATENT AND TRADEMARK OFFICE
WASHINGTON, D.C. 20231
www.uspto.gov

Paper No. 7

SEED INTELLECTUAL PROPERTY LAW GROUP PLLC
701 FIFTH AVE
SUITE 6300
SEATTLE WA 98104-7092

COPY MAILED

SEP 1 2 2002

OFFICE OF PETITIONS

In re Application of
James Billmaier, Anthony Istvan, and Robert Novak
Application No.10/124,806
Filed: April 16, 2002
Attorney Docket No. 260042.496
Title of Invention: APPARATUS AND METHODS FOR ADVERTISING IN A TRANSPARENT SECTION IN AN INTERACTIVE CONTENT PAGE

DECISION GRANTING STATUS UNDER 37 CFR 1.47(a)

This is in response to the petition under 37 CFR 1.47(a), filed July 23, 2002.

The petition is GRANTED.

Petitioner has shown that the non-signing inventor, Novak, has refused to join in the filing of the above-identified application after having been presented with the application papers. Specifically, the petition indicates the application papers were sent to the inventor's last known address via certified mail and Federal Express. Both packages were received. The non-signing inventor's failure to respond to the application mailings sufficiently establishes that he refuses to execute the application papers.

The above-identified application and papers have been reviewed and found in compliance with 37 CFR 1.47(a). This application is hereby accorded Rule 1.47(a) status.

As provided in Rule 1.47(c), this Office will forward notice of this application's filing to the non-signing inventor at the address given in the petition. Notice of the filing of this application will also be published in the Official Gazette.

This application is being forwarded to the Office of Initial Patent Examination for further processing.

Telephone inquiries related to this decision may be directed to Petitions Attorney Charlema R. Grant at (703) 306-0251.

E. Shawn Wells for
Beverly M. Flanagan
Supervisory Petitions Examiner
Office of Petitions
Office of the Deputy Commissioner
for Patent Examination Policy

- **$740** Statutory basic filing fee.
- **$130** Late oath or declaration Surcharge.
- Total additional claim fee(s) for this application is **$966**
  - **$630** for **35** total claims over 20.
  - **$336** for **4** independent claims over 3.

A copy of this notice MUST be returned with the reply.

W Kagoma

Customer Service Center
Initial Patent Examination Division (703) 308-1202
PART 2 - COPY TO BE RETURNED WITH RESPONSE

RECEIVED
JUL 3 0 2002
OFFICE OF PETITIONS

UNITED STATES PATENT AND TRADEMARK OFFICE

Commissioner for Patents
United States Patent and Trademark Office
Washington, D.C. 20231
www.uspto.gov

Robert E. Novak
602 Valeri Ruth Court
Santa Clara, CA 95080

COPY MAILED

SEP 03 2002

OFFICE OF PETITIONS

LETTER

In re Application of
Robert E. Novak, James A. Billmaier, and Anthony F. Istvan
Application No. 10/124,808
Filed: April 16, 2002
Attorney Docket No. 260042.497
Title: APPARATUS AND METHODS FOR ADVERTISING IN A SEQUENTIAL MANNER AND BASED UPON USER PREFERENCE

Dear Mr. Novak:

You are named as a joint inventor in the above-identified United States patent application filed under the provisions of 35 U.S.C. 116 (United States Code) and 37 CFR 1.47(a), Rules of Practice in Patent Cases. Should a patent be granted on the application you will be designated therein as a joint inventor.

As a named inventor you are entitled to inspect any paper in the file wrapper of the application, order copies of all or any part thereof (at a prepaid cost per 37 CFR 1.19) or make your position of record in the application. Alternatively, you may arrange to do any of the preceding through a registered patent attorney or agent presenting written authorization from you. If you care to join the application, agent of record (see below) would presumably assist you. Joining in the application would entail the filing of an appropriate oath or declaration by you pursuant to 37 CFR 1.63.

Telephone inquiries regarding this communication should be directed to Petitions Attorney Paul Shanoski at (703) 305-0011. Requests for information regarding your application should be directed to the File Information Unit at (703) 308-2733. Information regarding how to pay for and order a copy of the application, or a specific paper in the application, should be directed to the Certification Division at (703) 308-9726 or 1-800-972-6382 (outside the Washington D.C. area).

For

Beverly M. Flanagan
Supervisory Petitions Examiner
Office of Petitions
Office of the Deputy Commissioner
for Patent Examination Policy

SEED INTELLECTUAL PROPERTY LAW GROUP PLLC
701 FIFTH AVE
SUITE 6300
SEATTLE WA 98104-7092

UNITED STATES PATENT AND TRADEMARK OFFICE

Commissioner for Patents
United States Patent and Trademark Office
Washington, D.C. 20231
www.uspto.gov

Paper No. 8

SEED INTELLECTUAL PROPERTY LAW GROUP PLLC
701 FIFTH AVE
SUITE 6300
SEATTLE WA 98104-7092

COPY MAILED

SEP 0 3 2002

OFFICE OF PETITIONS

In re Application of
Robert E. Novak, James A. Billmaier, and Anthony F. Istvan
Application No. 10/124,808
Filed: April 16, 2002
Attorney Docket No. 260042.497
Title: APPARATUS AND METHODS FOR ADVERTISING IN A SEQUENTIAL MANNER AND BASED UPON USER PREFERENCE

DECISION AFFORDING STATUS UNDER 37 C.F.R. §1.47(a)

This is in response to the petition under 37 C.F.R. 1.47(a) [1], filed July 22, 2002.

The petition under 37 C.F.R. §1.47(a) is **GRANTED**.

The above-identified application was filed on April 16, 2002, identifying Robert E. Novak, James A. Billmaier, and Anthony F. Istvan as joint inventors. On May 23, 2002, applicant was mailed a "Notice to File Missing Parts of Nonprovisional Application - Filing Date Granted" (Notice), requiring an executed oath or declaration in compliance with 37 C.F.R. §1.63, a surcharge for its late filing, and the basic filing fee. This Notice set a two-month period for reply.

In reply, applicant filed the instant petition (and fee), the surcharge associated with the late filing of an oath or declaration, and the basic filing fee.

Accompanying the petition was a statement from the attorney of record, a declaration from the attorney's paralegal, a declaration executed by each inventor save Novak, copies of the cover letters sent to the non-signing inventor, and copies of the non-signing inventor's assignment[2] and employment agreement.

---

[1] A grantable petition under 37 C.F.R. §1.47(a) requires:
(1) the petition fee of $130;
(2) a surcharge of either $65 or $130 if the petition is not filed at the time of filing the application;
(3) a statement of the last known address of the non-signing inventors;
(4) proof that a copy of the entire application (specification, claims, drawings, and the oath or declaration) was sent or given to the non-signing inventor for review;
(5) proof that the non-signing inventor refuses to sign the oath or declaration after having been presented with the application papers if the inventor refuses to sign, or proof that diligent efforts have been made to locate the non-signing inventor if he or she cannot be found, and;
(6) a declaration which complies with 37 CFR §1.63.

[2] It is noted that the non-signing inventor has not executed the assignment document.

The above-identified application and papers have been reviewed and found in compliance with 37 CFR 1.47(a). This application is hereby accorded Rule 1.47(a) status.

As provided in Rule 1.47(a), this Office will forward notice of this application's filing to the non-signing inventor at the addresses given in the petition. Notice of the filing of this application will also be published in the Official Gazette.

After this decision is mailed, the application will be forwarded to Technology Center 2600 for further processing.

Telephone inquiries regarding this decision should be directed to Petitions Attorney Paul Shanoski at (703) 305-0011.

for

Beverly M. Flanagan
Supervisory Petitions Examiner
Office of Petitions
Office of the Deputy Commissioner
for Patent Examination Policy

UNITED STATES PATENT AND TRADEMARK OFFICE

Under Secretary of Commerce for Intellectual Property and
Director of the United States Patent and Trademark Office
Washington, D.C. 20231
www.uspto.gov

Paper No. 6

Ginger R. Dreger
KNOBBE, MARTENS, OLSON & BEAR, LLP
2040 Main Street
Fourteenth Floor
Irvine, California 92614

COPY MAILED

DEC 1 1 2002

OFFICE OF PETITIONS

In re Application of	:	
Kevin P. BAKER et al.	:	DECISION
Application No. 10/124,815	:	ON PETITION
Filed: April 17, 2002	:	37 CFR 1.182
Attorney Docket No. GNE.3330R1C57	:	

This is a decision on the petition filed October 25, 2002, under 37 CFR 1.182.

The petition is DISMISSED AS MOOT.

Petitioner requests that pages 49, 52, 54, 58, 60, 68, 70, 72, 74 and 78 of the specification, copies of which are provided herewith, be incorporated as part of the originally filed application and accorded a filing date of April 17, 2002, that is, the filing date of the instant application. Petitioner provides a copy of a return postcard acknowledging receipt of, *inter alia*, 149 pages of specification by the USPTO on April 17, 2002. A Notice of Omitted Items was mailed on August 19, 2002, indicating that the above-mentioned specification pages were missing from the instant specification upon filing.

A review of the application file reveals that the specification pages indicated as missing on the Notice of Omitted Items are, in fact, present in the instant application. Although the above-mentioned pages do not contain drawings or descriptive matter, they are numbered in accordance with 37 CFR 1.52(b)(5) and properly form a part of the specification.

Therefore, the Notice of Omitted Items mailed August 19, 2002 is hereby VACATED. Any inconvenience to applicants caused by the mailing of said Notice is sincerely regretted.

The petition fee of $130 required for the filing of the instant petition has been refunded to petitioner's deposit account 11-1410.

This application is being forwarded to the Office of Initial Patent Examination for further processing.

Inquiries regarding this communication may be directed to B. Dayoan at (703) 308-3865 or, in her absence, to the undersigned at (703) 305-1820.

Brian Hearn

Brian Hearn
Senior Petitions Examiner
Office of Petitions
Office of the Deputy Commissioner
for Patent Examination Policy

UNITED STATES PATENT AND TRADEMARK OFFICE

Commissioner for Patents
United States Patent and Trademark Office
P.O. Box 1450
Alexandria, VA 22313-1450
www.uspto.gov

JUN 20 2006

HELLER EHRMAN LLP
275 MIDDLEFIELD ROAD
MENLO PARK, CA 94025

In re Application of	:
Kevin P. Baker et al	:
Serial No.: 10/124,815	: DECISION ON PETITION
Filed: April 17, 2002	:
Attorney Docket No.: 39780-3330R1C57	:

This letter is in response to the Petition under 37 C.F.R. 1.181, filed April 6, 2006 requesting (1) that the rejections containing the six new references which have been used by the examiner in the Examiner's Answer be designated as new grounds of rejection; (2) that the examiner provide a corrected Examiner's Answer which identifies the rejections as new ground of rejection; and (3) that prosecution be reopened because of these new grounds of rejection.

BACKGROUND

On April 18, 2005, the examiner mailed a Final Office action to applicants, setting a three month shortened statutory period for reply. In the Office action claims 72-79 and 82-84 were rejected under 35 U.S.C. 101 as lacking a substantial credible utility and lack of enablement and under 35 U.S.C. 112, first paragraph, for the same reasons. The affidavits provided were also discussed as non-persuasive.

Applicants filed an argument after final rejection on June 13, 2005, extensively arguing the rejections of record. The examiner in an Advisory Action mailed July 6, 2005, denied entry thereof on the basis that the amendments raised new issues and that the arguments were unpersuasive. Applicants filed a Notice of Appeal on September 16, 2005, and an Appeal Brief on November 14, 2005.

The examiner prepared and mailed to applicants an Examiner's Answer on February 7, 2006. In the Answer the examiner maintained all of the rejections of record

Applicants filed this petition on April 6, 2006, asking that the Examiner's Answer be designated as having a new ground of rejection therein. Applicants filed concurrently a Reply Brief directed to the new grounds of rejection.

DISCUSSION

In the Examiner's Answer the examiner relied extensively on six new references in order to support the lack of utility and lack of enablement rejections set forth in the Final Office action. These new references are:

Saito-Hisaminato et al, 2002, DNA Res. 9:35-45;
Bustin, 2002, TRENDS in Molec. Med. 8(6):269-272;
Anderson et al, 1997, Electrophoresis 18:533-537;
Kawamoto et al, 1996, Mol. Cell. Biol. 174:151-158;
Lian et al, 2001. Blood 98:513-524; and
Fessler et al, 2002, J. Biol. Chem. 277:31291-31302.

The statutory basis of the rejections (35 U.S.C. 101 and 112, first paragraph) in the Examiner's Answer did not change from the FINAL office action mailed to applicants on April 18, 2005. However, it is clear that the examiner used the additional six new references to reinforce these rejections and rebut more thoroughly applicants' arguments. The Answer did not designate the arguments based on these new references as a new ground of rejection. It is also noted that an Answer containing a new ground of rejection must be concurred in and signed by a Group Director. This was not done in this instance.

Applicants have responded to these new arguments and new references raised by the examiner in the Examiner's Answer in their Reply Brief. However, they argue that they have been placed at a disadvantage because they are limited in their ability to present substantive evidence of their own in response to these new references and arguments without reopening of prosecution being granted.

Applicants' points of argument are well taken and are addressed by the decision below.

DECISION

For the above reasons, the petition under 37 C.F.R. 1.181 requesting (1) that the rejections containing the six new references which have been used in the Examiner's Answer be designated as new grounds of rejection; (2) that the Examiner provide a corrected Examiner's Answer which identifies the rejections as new grounds of rejections; and (3) that the FINALITY be withdrawn and that prosecution be reopened because of these new grounds of rejection are **GRANTED-IN-PART.**

Applicants' first request that the rejections in the Examiner's Answer be designated "new grounds of rejection" is **GRANTED**.

Applicants' second request has been effectively granted by this Decision on Petition designating the rejections in the Examiner's Answer to be "new grounds of rejection." The further request for the corrected Examiner's Answer is deemed moot in view of the above Decision and is therefore, **DISMISSED**.

Applicants' third request to have the FINALITY of the application withdrawn and prosecution reopened is **GRANTED** as this is a proper request under the Rules of Prosecution when a new ground of rejection is advanced in an Examiner's Answer. (Alternatively, applicants may rely solely on their Reply Brief and proceed to the Board.)

In view of applicants' expressed limited ability to present new evidence, as noted above, applicants are given TWO MONTHS from the mailing date of this Decision within which to submit any additional arguments, exhibits, affidavits or other evidence which they consider necessary in order to rebut the examiner's new grounds of rejection set forth in the Examiner's Answer. Failure to make any submission will be taken as applicants' agreement to rely solely on the already submitted Reply Brief. No extension of this time period will be permitted.

This application is being returned to the examiner for consideration of the Reply Brief which will be treated as a reply to new "Non-Final" rejections set forth in the Examiner's Answer and further action not inconsistent with this decision.

There is no fee for this petition and the petition fee paid of $130.00 will be credited to applicants' Deposit Account No. 08-1641, as directed.

Should there by any questions regarding this decision, please contact Special Program Examiner, William R. Dixon, Jr. by letter addressed to Director, TC 1600, at the address listed above, or by telephone at 571-272-0519 or by facsimile sent to the general Office facsimile number, 571-273-8300.

John L. LeGuyader
Director, Technology Center 1600

UNITED STATES PATENT AND TRADEMARK OFFICE

COMMISSIONER FOR PATENTS
UNITED STATES PATENT AND TRADEMARK OFFICE
P.O. BOX 1450
ALEXANDRIA, VA 22313-1450
www.uspto.gov

COPY MAILED

SEP 26 2005

OFFICE OF PETITIONS

HELLER EHRMAN LLP
275 MIDDLEFIELD ROAD
MENLO PARK, CA 94025-3506

In re Application of :
Baker, et al. : DECISION ON PETITION
Application No. 10/124,818 :
Filed: April 17, 2002 :
Docket No.: P3330R1C62 :

This is a decision on the petition under 37 CFR 1.137(a), filed September 1, 2005, to revive the above-identified application.

The petition is **DISMISSED**.

Any request for reconsideration of this decision must be submitted within **TWO (2) MONTHS** from mail date of this decision. Extensions of time under 37 CFR 1.136(a) are permitted. The reconsideration request should include a cover letter entitled "Renewed Petition under 37 CFR 1.137(a)." This is not a final agency decision.

This application became abandoned May 9, 2005 for failure to timely reply to the non-final Office action mailed February 8, 2005. The non-final Office action set a three (3) month shortened statutory period of time for reply. No extensions of time in accordance with 37 CFR 1.136 were timely requested. This decision precedes mailing of Notice of Abandonment.

A grantable petition under 37 CFR 1.137(a) must be accompanied by: (1) the required reply, unless previously filed; (2) the petition fee as set forth in 37 CFR 1.17(l); (3) a showing to the satisfaction of the Commissioner that the entire delay in filing the required reply from the due date for the reply until the filing of a grantable petition pursuant to 37 CFR 1.137(a) was unavoidable; and (4) any terminal disclaimer (and fee as set forth in 37 CFR 1.20(d)) required pursuant to 37 CFR 1.137(c).

The present petition fails to satisfy requirement (3) set forth above. Petitioner has failed to present a showing to the satisfaction of the Commissioner that the entire delay in filing the required reply from the due date for the reply until the

filing of a grantable petition pursuant to 37 CFR 1.137(a) was unavoidable.

The Office may revive an abandoned application if the delay in responding to the relevant outstanding Office requirement is shown to the satisfaction of the Commissioner to have been "unavoidable." See, 37 CFR 1.137(a)(3). Decisions on reviving abandoned applications have adopted the reasonably prudent person standard in determining if the delay was unavoidable. Ex parte Pratt, 1887 Dec. Comm'r Pat. 31, 32-33 (Comm'r Pat. 1887)(the term "unavoidable" "is applicable to ordinary human affairs, and requires no more or greater care or diligence than is generally used and observed by prudent and careful men in relation to their most important business"); In re Mattullath, 38 App. D.C. 497, 514-15 (D.C. Cir. 1912); Ex parte Henrich, 1913 Dec. Comm'r Pat. 139, 141 (Comm'r Pat. 1913). In addition, decisions on revival are made on a "case-by-case basis, taking all the facts and circumstances into account." Smith v. Mossinghoff, 671 F.2d 533, 538, 213 USPQ 977, 982 (D.C. Cir. 1982). A petition to revive an application as unavoidably abandoned cannot be granted where petitioner has failed to meet his or her burden of establishing the cause of the unavoidable delay. Haines v. Quigg, 673 F. Supp. 314, 5 USPQ2d 1130 (N.D. Ind. 1987).

Petitioners attribute the delay in timely responding to the Office communication to a change of correspondence address. Petitioners argue that a change of correspondence address was submitted in the above-identified application prior to the mailing of non-final Office action and that the Office fails to mail the non-final Office action to the correct address.

Petitioners' arguments have been considered, but are not found persuasive. The Office communication was properly mailed February 8, 2005 to the correspondence address made of record by applicants at the time of filing of the application.

Petitioners are advised that where an application becomes abandoned as a consequence of a change of correspondence address (the Office action being mailed to the old, uncorrected address and failing to reach the applicant in sufficient time to permit a timely reply), an adequate showing of "unavoidable" delay will require a showing that due care was taken to adhere to the requirement for prompt notification in each concerned application of the change of address (See, MPEP 601.03), and must include an adequate showing that a timely notification of the change of address was filed in the application concerned,

and in a manner reasonably calculated to call attention to the fact that it was a notification of a change of address. See, MPEP 711.03(c).

Petitioners have failed to establish that that they adhered to 37 CFR 1.33 and MPEP 601.03 by timely and properly notifying the Office of the change of correspondence address.

The notification on a paper listing plural applications as being affected (except as provided for under the Customer Number practice, *see*, MPEP 403) does not constitute proper notification of a change in correspondence address

The copy of the revocation and power of attorney and change of address submitted on petition reveals that petitioners attempted to utilize a single form to effect a change of correspondence address in multiple applications. Petitioners are advised that when such a multiple listing is submitted, the Office will institute the requested change in the first application/patent number listed.

It is noted that the copy of the revocation and power of attorney and change of address submitted on petition does to some extent involve a customer number. However, the document utilized two separate customer numbers to appoint specific attorneys associated with specific customer numbers in the plural listing of applications.

The request for change of correspondence address, however, does not direct the Office to associate any particular customer number with the plural listing. Accordingly, the request for change of correspondence address, as contained in the plural listing, was not sufficient for application at issue, 10/124,818.

Accordingly, petitioners have failed to establish that the failure to timely submit a proper reply to the non-final Office action was unavoidable.

Any renewed petition must be accompanied by evidence that sufficiently establishes that the failure to timely reply to the Office communication was unavoidable.

ALTERNATE VENUE

Petitioners may wish to consider filing a petition stating that the delay was unintentional. Petitioner's attention is directed

to 37 CFR 1.137(b) which provides for the revival of an "unintentionally" abandoned application without a showing that the delay in prosecution or in late payment of an issue fee was "unavoidable". An "unintentional" petition under 37 CFR 1.137(b) must be accompanied by the required petition fee and reply.

The filing of a petition under 37 CFR 1.137(b) cannot be intentionally delayed and therefore must be filed promptly. A person seeking revival due to unintentional delay cannot make a statement that the delay was unintentional unless the entire delay, including the delay from the date it was discovered that the application was abandoned until the filing of the petition to revive under 37 CFR 1.137(b), was unintentional. A statement that the delay was unintentional is not appropriate if petitioner intentionally delayed the filing of a petition for revival under 37 CFR 1.137(b).

Further correspondence with respect to this matter should be addressed as follows:

By mail:	Mail Stop Petition Commissioner for Patents P.O. Box 1450 Alexandria, VA 22313-1450
By facsimile:	(571) 273-8300
By hand:	U.S. Patent and Trademark Office Customer Window Mail Stop Petition Randolph Building Dulany Street Alexandria, VA 22314

The requested change of correspondence address submitted herewith has been entered into the record.

Telephone inquiries concerning this matter may be directed to the undersigned at (571) 272-3205.

Alesia M. Brown
Petitions Attorney
Office of Petitions

UNITED STATES PATENT AND TRADEMARK OFFICE

COMMISSIONER FOR PATENTS
UNITED STATES PATENT AND TRADEMARK OFFICE
P.O. BOX 1450
ALEXANDRIA, VA 22313-1450
www.uspto.gov

COPY MAILED

NOV 21 2005

OFFICE OF PETITIONS

HELLER EHRMAN LLP
275 MIDDLEFIELD ROAD
MENLO PARK, CA 94025-3506

In re Application of :
Baker, et al. : DECISION ON PETITION
Application No. 10/124,818 :
Filed: April 17, 2002 :
Attorney Docket No.: P3330R1C62 :

This is a decision on the petition renewed under 37 C.F.R. § 1.137(b), filed November 4, 2005, to revive the above-identified application.

The petition is **GRANTED**.

This application became abandoned May 9, 2005 for failure to timely reply to the non-final Office action mailed February 8, 2005. The Notice set a three (3) month shortened statutory period of time for reply. No petition for extension of time in accordance with 37 C.F.R. § 1.136 was timely submitted. Notice of Abandonment was mailed September 30, 2005. A petition under 37 CFR 1.137(a) was filed September 1, 2005 and dismissed September 26, 2005.

A grantable petition pursuant to 37 C.F.R. § 1.137(b) must be accompanied by: (1) the required reply to the outstanding Office action or notice, unless previously filed; (2) the petition fee as set forth in 37 C.F.R. § 1.17(m); (3) a statement that the entire delay in filing the required reply from the due date for the reply until the filing of a grantable petition pursuant to 37 C.F.R. § 1.137(b) was unintentional; and (4) any terminal disclaimer (and fee set forth in 37 C.F.R. § 1.20(d)) required pursuant to 37 C.F.R. § 1.137(c).

The instant petition has been reviewed and found in compliance with the provisions of 37 C.F.R. § 1.137(b). Accordingly, the failure to timely submit a proper reply to the non-final Office action is accepted as having been unintentionally delayed.

A review of Office finance records reveals that petitioners overpaid for the previously submitted petition under 37 CFR 1.137(a). A petition under 37 CFR 1.137(a) is currently $500.00

for a large entity. As petitioners submitted $750.00 in connection with the petition under 37 CFR 1.137(a), a refund of $250.00 has been requested from the Finance Office, Refund Section.

This application will be forwarded to Technology Center 1600 for further processing.

Telephone inquiries concerning this matter may be directed to the undersigned at (571) 272-3205.

Alesia M. Brown
Petitions Attorney
Office of Petitions

UNITED STATES PATENT AND TRADEMARK OFFICE

Commissioner for Patents
United States Patent and Trademark Office
P.O. Box 1450
Alexandria, VA 22313-1450
www.uspto.gov

BRYAN CAVE
1290 AVENUE OF THE AMERICAS
NEW YORK, NY 10104

COPY MAILED

MAY 0 6 2005

OFFICE OF PETITIONS

In re Application of	:	
Yvonne Godfrey	:	
Application No. 10/124,866	:	ON PETITION
Filed: April 18, 2002	:	
Attorney Docket No. 39104/112833full	:	

This is a decision on the petition under 37 CFR 1.173(b), filed November 22, 2004, to revive the above-identified application.

The petition is **GRANTED.**

The above-identified application became abandoned for failure to reply in a timely manner to the non-final Office action mailed August 12, 2003, which set a shortened statutory period for reply of one (1) month. No extensions of time under the provisions of 37 CFR 1.136(a) were obtained. Accordingly, the above-identified application became abandoned on September 13, 2003.

An extension of time under 37 CFR 1.136 must be filed prior to the expiration of the maximum extendable period for reply. See In re Application of S., 8 USPQ2d 1630, 1631 (Comm'r Pats. 1988). Accordingly, since the $1,040 extension of time submitted with the petition on November 22, 2004 was subsequent to the maximum extendable period for reply, this fee is unnecessary and will be credited to petitioner's deposit account.

The Change of Correspondence Address filed on December 6, 2004 is entered and made of record.

Telephone inquiries concerning this decision should be directed to Wan Laymon at (571) 272-3220.

This matter is being referred to Technology Center AU 3738.

Wan Laymon
Petitions Examiner
Office of Petitions
Office of the Deputy Commissioner
for Patent Examination Policy

UNITED STATES PATENT AND TRADEMARK OFFICE

Commissioner for Patents
United States Patent and Trademark Office
P.O. Box 1450
Alexandria, VA 22313-1450
www.uspto.gov

OLSON & CEPURITIS, LTD.
20 NORTH WACKER DRIVE
36TH FLOOR
CHICAGO IL 60606

COPY MAILED

MAR 3 1 2009

OFFICE OF PETITIONS

Patent No. 6,790,252	:	
Application No. 10/124,883	:	
Filed: April 18, 2002	:	ON PETITION
Issued: September 14, 2004	:	
Attorney Docket No. Ryer-5	:	

This is a decision on the petition under 37 CFR 1.378(c), filed November 18, 2008, to accept the unintentionally delayed payment of a maintenance fee for the above-identified patent.

The petition is **GRANTED**.

The patent issued September 14, 2004. The last day of the grace period for paying the 3.5-year maintenance fee was September 14, 2008. Therefore, since this petition was filed within twenty-four months after the six-month grace period provided in 37 CFR 1.362(e), this petition was timely filed under the provisions of 37 CFR 1.378(c).

The maintenance fee is hereby accepted and the above-identified patent is reinstated as of the mail date of this decision.

Telephone inquiries concerning this decision should be directed to the undersigned at (571) 272-3206.

Liana Walsh
Petitions Examiner
Office of Petitions

UNITED STATES PATENT AND TRADEMARK OFFICE

COMMISSIONER FOR PATENTS
UNITED STATES PATENT AND TRADEMARK OFFICE
WASHINGTON, D.C. 20231
www.uspto.gov
DIW 11-02

Paper No. 8

MARTINE & PENILLA, LLP
710 LAKEWAY DRIVE
SUITE 170
SUNNYVALE CA 94085

COPY MAILED

NOV 21 2002

OFFICE OF PETITIONS

In re Application of :
Shareef, Shmuel, Basha, and Martono:
Application No. 10/124,887 : DECISION ACCORDING STATUS
Filed: 17 April, 2002 : UNDER 37 CFR 1.47(a)
Attorney Docket No. NOVEP010 :

This is in response to the renewed petition filed under 37 CFR 1.47(a) on 13 November, 2002.

The petition is **GRANTED**.

Petitioner has shown that the non-signing inventor, Erez Shmuel, has refused to join in the filing of the above-identified application after having been sent a copy of the application papers. Specifically, the declaration of petitioner's registered patent counsel, Michael L. Gencarella, establishes that the non-signing inventor was sent a copy of the application via Federal Express, but orally refused during a telephone call, to sign the declaration unless provided with personnel records. A follow-up letter was sent to joint inventor Shmuel again asking him to sign the declaration. The joint inventor, however, has failed to sign and return the declaration.

The above-identified application and papers have been reviewed and found in compliance with 37 CFR 1.47(a). This application is hereby accorded Rule 1.47(a) status.

As provided in Rule 1.47(c), this Office will forward notice of this application's filing to the non-signing inventor at the address given in the declaration. Notice of the filing of this application will also be published in the Official Gazette.

BEST AVAILABLE COPY

The application is being forwarded to the Office of Initial Patent Examination for further processing.

Telephone inquiries related to this decision should be directed to the undersigned at 703-308-6918.

D Wood

Douglas I. Wood
Senior Petitions Attorney
Office of Petitions
Office of the Deputy Commissioner
for Patent Examination Policy

BEST AVAILABLE COPY

UNITED STATES PATENT AND TRADEMARK OFFICE

COMMISSIONER FOR PATENTS
UNITED STATES PATENT AND TRADEMARK OFFICE
WASHINGTON, D.C. 20231
www.uspto.gov
DIW 11-02

Erez Shmuel
3310 Olsen Drive
San Jose, CA 95117

COPY MAILED

NOV 21 2002

OFFICE OF PETITIONS

In re Application of
Shareef et al.
Application No. 10/124,887
Filed: 17 April, 2002
For: SLOPED CHAMBER TOP FOR SUBSTRATE PROCESSING

Dear Mr. Shmuel:

You are named as a joint inventor in the above identified United States patent application, filed under the provisions of 35 U.S.C. 116 (United States Code), and 37 CFR 1.47(a), Rules of Practice in Patent Cases. Should a patent be granted on the application you will be designated therein as a joint inventor.

As a named inventor you are entitled to inspect any paper in the file wrapper of the application, order copies of all or any part thereof (at a prepaid cost per 37 CFR 1.19) or make your position of record in the application. Alternatively, you may arrange to do any of the preceding through a registered patent attorney or agent presenting written authorization from you. If you care to join the application, counsel of record (see below) would presumably assist you. Joining in the application would entail the filing of an appropriate oath or declaration by you pursuant to 37 CFR 1.63.

Telephone inquiries regarding this communication should be directed to the undersigned at 703/308-6918. Requests for information regarding your application should be directed to the File Information Unit at 703/308-2733. Information regarding how to pay for and order a copy of the application, or a specific paper in the application, should be directed to Certification Division at 703/308-9726 or 1-800-972-6382 (outside the Washington D.C. area).

D Wood

Douglas I. Wood
Senior Petitions Attorney
Office of Petitions
Office of the Deputy Commissioner
for Patent Examination Policy

MARTINE & PENILLA, LLP
710 LAKEWAY DRIVE
SUITE 170
SUNNYVALE CA 94085

BEST AVAILABLE COPY

UNITED STATES PATENT AND TRADEMARK OFFICE

COMMISSIONER FOR PATENTS
UNITED STATES PATENT AND TRADEMARK OFFICE
WASHINGTON, D.C. 20231
www.uspto.gov
DIW 09-02

Paper No. 5

MARTINE & PENILLA, LLP
710 LAKEWAY DRIVE
SUITE 170
SUNNYVALE CA 94085

COPY MAILED
SEP 2 0 2002
OFFICE OF PETITIONS

In re Application of :
Shareef, Shmuel, Basha, and Martono:
Application No. 10/124,887 : DECISION REFUSING STATUS
Filed: 17 April, 2002 : UNDER 37 CFR 1.47(a)
Attorney Docket No. NOVEP010 :

This is in response to the petition filed under 37 CFR 1.47(a) on 23 July, 2002.

The petition is **DISMISSED**.

Rule 47 applicant is given TWO MONTHS from the mailing date of this decision to reply, correcting the below-noted deficiencies. Any reply should be entitled "Request for Reconsideration of Petition Under 37 CFR 1.47(a)," and should only address the deficiencies noted below, except that the reply may include an oath or declaration executed by the non-signing inventor. **FAILURE TO RESPOND WILL RESULT IN ABANDONMENT OF THE APPLICATION.** Extensions of time may be obtained in accordance with 37 CFR 1.136(a).

The above-identified issue application was filed on 17 April, 2002, with a declaration naming Iqbal Shareef, Erez Shmuel, Syed Basha, and Suwipin Martono joint inventors and signed by all joint inventors except Shmuel on behalf of themselves and joint inventor Shmuel. Accordingly, on 29 May, 2002, Initial Patent Examination Division mailed a Notice to File Missing Parts of Nonprovisional Application, requiring an oath or declaration signed by joint inventor Shmuel and a surcharge for its late filing.

BEST AVAILABLE COPY

In response, on 23 July, 2002. Petitioners assert that Shmuel was sent a copy of the application for patent but has refused to return a signed declaration.

A grantable petition under 37 CFR 1.47(a) requires:

(1) proof that the non-signing inventor cannot be reached or located, notwithstanding diligent effort, or refuses to sign the oath or declaration after having been presented with the application papers (specification, claims and drawings);

(2) an acceptable oath or declaration in compliance with 35 U.S.C. §§ 115 and 116;

(3) the petition fee;

(4) a surcharge of $130 or $65 (small entity) if the petition and/or declaration is not filed at the time of filing the application, and

(5) a statement of the last known address of the non-signing inventor.

The petition lacks item (2).

In regards to item (2), the declaration contains is defective in that it contains non initialed and/or non-dated alterations.[1] Specifically, there is an uninitialed and/or undated alteration in the signature block for joint inventor Basha. A new oath or declaration in compliance with 37 CFR 1.63 and 1.67, signed by the inventor to whom the error or deficiency relates is required.[2]

Additionally, it is noted that the declaration filed on 17 April, 2002, is defective in that it does not state that the person(s) making the oath or declaration acknowledges the duty to disclose to the Office all information known to the person(s) to be material to patentability as defined in 37 CFR 1.56. Rather, the declaration incorrectly acknowledges a duty to disclose all information material to examination of the application. A new oath or declaration in compliance with 37 CFR 1.63 and 1.67, signed by all of the signing inventors on behalf of themselves and the non-signing inventor must be submitted with a renewed petition.

Further correspondence with respect to this matter should be addressed as follows:

---

[1] See 37 CFR 1.52(c).

[2] 37 CFR 1.67(a)(2).

BEST AVAILABLE COPY

By mail: Commissioner for Patents
Box DAC
Washington, D.C. 20231

By FAX: (703) 308-6916
Attn: Office of Petitions

By hand: Crystal Plaza Four, Suite 3C23
2201 S. Clark Place
Arlington, VA

Telephone inquiries related to this decision should be directed to the undersigned at 703-308-6918.

Douglas I. Wood
Senior Petitions Attorney
Office of Petitions
Office of the Deputy Commissioner
for Patent Examination Policy

BEST AVAILABLE COPY

UNITED STATES PATENT AND TRADEMARK OFFICE

Commissioner for Patents
United States Patent and Trademark Office
P.O. Box 1450
Alexandria, VA 22313-1450
www.uspto.gov

HUNTSMAN CORPORATION
LEGAL DEPARTMENT
10003 WOODLOCH FOREST DRIVE
THE WOODLANDS TX 77380

COPY MAILED

OCT 0 2 2006

OFFICE OF PETITIONS

In re Application of :
Terry L. Renken et al. :
Application No. 10/124,925 :
Filed: April 18, 2002 :
Attorney Docket No.: 81,601 :

ON PETITION

This is a decision on the petition filed April 5, 2006, under 37 CFR 1.137(b) to revive the above-identified application.

The petition is **GRANTED**.

This application was held abandoned on May 9, 2005 and a Notice of Abandonment was mailed May 10, 2005, for the appellant's failure to timely take action after the Board of Patent Appeals and Interferences decision rendered March 2, 2005.

In response thereof, petitioner has submitted a Request for Continued Examination (RCE) and an amendment as the submission required under 37 CFR 1.114.

This matter is being referred to Technology Center 1754 for processing of the RCE.

Telephone inquiries related to this decision should be directed to the undersigned Petitions Attorney at (571) 272-3212.

Patricia Faison-Ball

Patricia Faison-Ball
Senior Petitions Attorney
Office of Petitions

UNITED STATES PATENT AND TRADEMARK OFFICE

COMMISSIONER FOR PATENTS
UNITED STATES PATENT AND TRADEMARK OFFICE
P.O. BOX 1450
ALEXANDRIA, VA 22313-1450
www.uspto.gov

SCHWARTZ LAW FIRM, P.C.
6100 FAIRVIEW ROAD
SUITE 530
CHARLOTTE, NC 28210

COPY MAILED
AUG 1 6 2004
OFFICE OF PETITIONS

In re Application of James J. Harris Application No. 10/124,926 Filed: April 18, 2002 Attorney Docket No.: 2892/1	: : : : :	ON PETITION

This is a decision on the petition under 37 CFR 1.137(b), filed June 1, 2004, to revive the above-identified application.

The petition is **GRANTED**.

The application became abandoned for a failure to reply in a timely manner to the final Office action mailed October 9, 2003, which set a shortened statutory period for reply of three (3) months.

The above-identified application is being revived solely for purposes of continuity. As continuity has been established by this decision reviving the above-identified application, the above-identified application is again abandoned in favor of continuing Application No. 10/856,680 filed June 1, 2004.

Telephone inquiries concerning this decision should be directed to the undersigned at (703) 305-9220.

The application file is being forwarded to Files Repository.

Sherry D. Brinkley
Petitions Examiner
Office of Petitions
Office of the Deputy Commissioner
for Patent Examination Policy

UNITED STATES PATENT AND TRADEMARK OFFICE

Commissioner for Patents
United States Patent and Trademark Office
P.O. Box 1450
Alexandria, VA 22313-1450
www.uspto.gov

BELL, BOYD & LLOYD, LLC
P.O. BOX 1135
CHICAGO IL 60690-1135

COPY MAILED

AUG 2 7 2004

OFFICE OF PETITIONS

In re Application of :
Brent Anderson :
Application No. 10/124,940 :
Filed: April 17, 2002 :
Attorney Docket No. 113937-003 :

NOTICE

This is a notice regarding your request for acceptance of a fee deficiency submission under 37 CFR 1.28. On September 1, 1998, the Court of Appeals for the Federal Circuit held that 37 CFR 1.28(c) is the sole provision governing the time for correction of the erroneous payment of the issue fee as a small entity. **See DH Technology v. Synergystex International, Inc. 154 F.3d 1333, 47 USPQ2d 1865 (Fed. Cir. Sept. 1, 1998).**

The Office no longer investigates or rejects original or reissue applications under 37 CFR 1.56. **1098 Off. Gaz. Pat. Office 502 (January 3, 1989).** Therefore, nothing in this Notice is intended to imply that an investigation was done.

Your fee deficiency submission under 37 CFR 1.28 is hereby **ACCEPTED.**

There is no indication that the person signing the instant petition was ever given a power of attorney or authorization of agent to prosecute the above-identified application. If the person signing the instant petition desires to receive future correspondence regarding this application, the appropriate power of attorney or authorization of agent must be submitted. While a courtesy copy of this decision is being mailed to the person signing the instant petition, all future correspondence will be directed to the address of currently of record until such time as appropriate instructions are received to the contrary.

Inquiries related to this communication should be directed to the undersigned at (703) 305-8859.

This file is being referred to Technology Center AU 3654.

Karen Creasy

Karen Creasy
Petitions Examiner
Office of Petitions
Office of the Deputy Commissioner
for Patent Examination Policy

cc:

JOSEPH A. FUCHS
EVEREST INTELLECTUAL PROPERTY LAW GROUP
P.O. BOX 708
NORTHBROOK, IL 60065

UNITED STATES PATENT AND TRADEMARK OFFICE

Commissioner for Patents
United States Patent and Trademark Office
P.O. Box 1450
Alexandria, VA 22313-1450
www.uspto.gov

JOSEPH A. FUCHS
EVEREST INTELLECTUAL PROPERTY LAW GROUP
P.O. BOX 708
NORTHBROOK, IL 60065

COPY MAILED

MAR 0 9 2005

OFFICE OF PETITIONS

In re Application of	:
Brent Anderson	:
Application No. 10/124,940	: DECISION GRANTING PETITION
Filed: April 17, 2002	: UNDER 37 CFR 1.137(b)
Attorney Docket No. 113937-003	:

This is a decision on the petition under 37 CFR 1.137(b), filed October 25, 2004, to revive the above-identified application.

The petition is **GRANTED**.

The petition satisfies the conditions for revival pursuant to the provisions of 37 CFR 1.137(b) in that (1) the reply in the form of an RCE; (2) the petition fee; and (3) the required statement of unintentional delay have been received. Accordingly, the reply to the final Office action of February 23, 2004, is accepted as having been unintentionally delayed.

Telephone inquiries concerning this decision should be directed to the undersigned at (571) 272-3208.

This matter is being referred to Technology Center AU 3654.

Karen Creasy

Karen Creasy
Petitions Examiner
Office of Petitions
Office of the Deputy Commissioner
for Patent Examination Policy

UNITED STATES PATENT AND TRADEMARK OFFICE

Commissioner for Patents
United States Patent and Trademark Office
P.O. Box 1450
Alexandria, VA 22313-1450
www.uspto.gov

JOSEPH A. FUCHS
EVEREST INTELLECTUAL PROPERTY LAW GROUP
P.O. BOX 708
NORTHBROOK IL 60065

COPY MAILED

JAN 18 2007

OFFICE OF PETITIONS

In re Application of	:	
Brent Anderson	:	
Application No. 10/124,940	:	DECISION GRANTING PETITION
Filed: April 17, 2002	:	UNDER 37 CFR 1.137(b)
Attorney Docket No. 113937-003	:	

This is a decision on the petition under 37 CFR 1.137(b), filed September 18, 2006, to revive the above-identified application.

The petition is **GRANTED**.

The petition satisfies the conditions for revival pursuant to the provisions of 37 CFR 1.137(b) in that (1) the reply in the form of the issue fee and publication fee; (2) the petition fee; and (3) the required statement of unintentional delay have been received. Accordingly, the reply to the Notice of Allowance of June 20, 2005, is accepted as having been unintentionally delayed.

Telephone inquiries concerning this decision should be directed to the undersigned at (571) 272-3208.

This matter is being referred to Patent Publication.

Karen Creasy

Karen Creasy
Petitions Examiner
Office of Petitions

UNITED STATES PATENT AND TRADEMARK OFFICE

Commissioner for Patents
United States Patent and Trademark Office
P.O. Box 1450
Alexandria, VA 22313-1450
www.uspto.gov

JUN 11 2004

KILYK & BOWERSOX PLLC
53 A EAST LEE STREET
WARRENTON, VA 20186

In re Application of	:
Toshihiro Kuroita et al	:
Serial No.: 10/124,953	: PETITION DECISION
Filed: April 18, 2002	:
Attorney Docket No.: 3190-037	:

This is in response to the petition under 37 CFR 1.181, filed April 2, 2004, for withdrawal of abandonment of the above identified application based on failure to receive an Office action. .

A review of the file history shows that the examiner mailed an Office action to applicants on August 26, 2003, setting a one month shortened statutory period for reply. This action was retuned to the Office for unknown reasons. The Office action was then remailed to applicants on October 9, 2003. Upon failure to receive a reply the Office mailed a Notice of Abandonment to applicants on March 22, 2004. Applicants state that the Office action was never received and provide a statement and copies of docket records establishing that the Office action was never received. In view of the evidence presented the Notice of Abandonment is withdrawn and the application is restored to pending status with the mailing of this decision.

The petition is **GRANTED**.

The application will be forwarded to the examiner for mailing of a new Office action.

Should there be any questions about this decision please contact William R. Dixon, Jr., by letter addressed to Director, TC 1600, P.O. Box 1450, Alexandria, VA 22313-1450, or by telephone at 571-272-0519 or by facsimile sent to the general Office facsimile number, 703-872-9306.

Bruce M. Kisliuk
Director, Technology Center 1600

UNITED STATES PATENT AND TRADEMARK OFFICE

COMMISSIONER FOR PATENTS
UNITED STATES PATENT AND TRADEMARK OFFICE
P.O. BOX 1450
ALEXANDRIA, VA 22313-1450
www.uspto.gov

Paper No.

KILYK & BOWERSOX, P.L.L.C.
400 HOLIDAY COURT
SUITE 102
WARRENTON, VA 20186

COPY MAILED

MAR 10 2006

OFFICE OF PETITIONS

In re Application of :
Kuroita et al. :
Application No. 10/124,953 :
Filed: April 18, 2002 :
Atty Docket No. 216677 :

This is a decision on the "APPLICATION FOR PATENT TERM ADJUSTMENT (REQUEST FOR CORRECTION OF PATENT TERM ADJUSTMENT)" file November 18, 2005. Applicants request that the initial determination of patent term adjustment be corrected from sixty-nine (69) days to five hundred thirty-nine (539) days, or in the alternative, two hundred forty-nine (249) days.

The application for patent term adjustment is **GRANTED TO THE EXTENT INDICATED HEREIN**.

The Office has updated the PAIR screen to reflect that the correct Patent Term Adjustment (PTA) determination at the time of the mailing of the Notice of Allowance is one hundred thirteen **(113)** days. A copy of the updated PAIR screen, showing the correct determination, is enclosed.

On August 23, 2005, the Office mailed the Determination of Patent Term Adjustment under 35 U.S.C. 154(b) in the above-identified application. The Notice stated that the patent term adjustment to date is 69 days. Applicants request that the patent term adjustment be increased to 539 days on the basis that a first Office action on the merits was not received until December 8, 2004, 14 months and 539 days after the filing date of the application. Alternatively, applicants maintain that the patent term adjustment should be increased by 180 days for the

period from the date of the mailing of a decision granting their petition to withdraw the holding of abandonment until December 8, 2004, the date of mailing of the Office action mailed pursuant to the decision.

Applicants state that the application is not subject to a terminal disclaimer.

37 C.F.R. § 1.702 sets forth the grounds for adjustment of patent term due to examination delay under the Patent Term Guarantee Act of 1999 (original applications, other than designs, filed on or after May 29, 2000). As of the mailing of the notice of allowance, the only section applicable to this case is § 1.702(a)(1) as the patent was delayed due to the failure of the Office to:

> (1) Mail at least one of a notification under 35 U.S.C. 132 or a notice of allowance under 35 U.S.C. 151 not later than fourteen months after the date on which the application was filed under 35 U.S.C. 111(a).

The rules do not provide for a period of adjustment for the period of time from the date of mailing of a decision granting a petition to withdraw the holding of abandonment until the date of mailing of a subsequent Office action pursuant to the decision.

However, the application is entitled to more patent term adjustment than provided for pursuant to 1.702(a)(1) and 1.703(a)(1). Under the circumstances of this case, it is proper to use the date of mailing of the Office action as mailed on October 9, 2003 in calculating Office delay. This period is 113 days (instead of 69 days) counting the number of days in the period beginning on the day after the date that is fourteen months after the date on which the application was filed under 35 U.S.C. 111(a), June 19, 2003, to the date of mailing of the action under 35 U.S.C. 132, October 9, 2003.

As of the date of mailing of the notice of allowance, there was no basis for entering a period of reduction for applicant delay.

In view thereof, the initial determination of patent term adjustment is one hundred thirteen (113) days.

The Office acknowledges submission of the $200 fee set forth in 37 CFR 1.18(e). No additional fees are required.

The application file is being forwarded for issuance of the patent. The patent term adjustment indicated on the patent will include any additional patent term adjustment accrued for the Office taking in excess of four months to issue the patent after the payment of the Issue Fee and satisfaction of all outstanding requirements, and for the Office taking in excess of 3 years to issue the patent (to the extent that the over 3 year period does not overlap with periods of adjustment earlier accorded.)

Telephone inquiries specific to this matter should be directed to the undersigned at (571) 272-3219.

Nancy Johnson
Senior Petitions Attorney
Office of Petitions

Enclosure: Copy of REVISED PAIR determination

Day : Thursday

PALM INTRANET

Date: 3/9/2006
Time: 18:49:43

PTA Calculations for Application: 10/124953			
Application Filing Date:	04/18/2002	PTO Delay (PTO):	69
Issue Date of Patent:		Three Years:	0
Pre-Issue Petitions:	0	Applicant Delay (APPL):	0
Post-Issue Petitions:	0	Total PTA (days):	113
PTO Delay Adjustment:	44		

File Contents History

Number	Date	Contents Description	PTO	APPL	START
56	03/09/2006	ADJUSTMENT OF PTA CALCULATION BY PTO		69	
55	03/09/2006	ADJUSTMENT OF PTA CALCULATION BY PTO	113		
42	08/23/2005	MAIL NOTICE OF ALLOWANCE			
41	08/22/2005	ISSUE REVISION COMPLETED			
40	08/22/2005	NOTICE OF ALLOWANCE DATA VERIFICATION COMPLETED			
39	08/22/2005	NOTICE OF ALLOWABILITY			
38	08/10/2005	DATE FORWARDED TO EXAMINER			
37	08/04/2005	AMENDMENT AFTER FINAL REJECTION			
36	05/23/2005	MAIL FINAL REJECTION (PTOL - 326)			
35	05/19/2005	FINAL REJECTION			
34	05/10/2005	DATE FORWARDED TO EXAMINER			
33	05/06/2005	RESPONSE AFTER NON-FINAL ACTION			
32	02/10/2005	MAIL NON-FINAL REJECTION			
31	02/09/2005	NON-FINAL REJECTION			
30	01/31/2005	DATE FORWARDED TO EXAMINER			
29	01/07/2005	RESPONSE TO ELECTION / RESTRICTION FILED			
28	07/22/2002	INFORMATION DISCLOSURE STATEMENT (IDS) FILED			
27	12/08/2004	MAIL NOTICE OF WITHDRAWN ACTION			
26	12/08/2004	MAIL RESTRICTION REQUIREMENT			
25	12/08/2004	REQUIREMENT FOR RESTRICTION / ELECTION			
24	12/08/2004	LETTER WITHDRAWING / VACATING OFFICE ACTION			
23	06/28/2004	CORRESPONDENCE ADDRESS CHANGE			
22	06/14/2004	MAIL NOTICE OF RESCINDED ABANDONMENT			
		NOTICE OF RESCINDED ABANDONMENT IN TCS			

21	06/14/2004				
20	06/11/2004	PETITION TO REVIVE APPLICATION - GRANTED			
19	04/02/2004	PETITION ENTERED			
18	03/24/2004	MAIL ABANDONMENT FOR FAILURE TO RESPOND TO OFFICE ACTION			
17	03/23/2004	ABANDONMENT FOR FAILURE TO RESPOND TO OFFICE ACTION			
16	10/09/2003	MAIL MISCELLANEOUS COMMUNICATION TO APPLICANT			
15	10/08/2003	MISCELLANEOUS COMMUNICATION TO APPLICANT - NO ACTION COUNT			
14	10/08/2003	RESTART RESPONSE OF ACTION			
13	08/26/2003	MAIL RESTRICTION REQUIREMENT	69		-1
12	08/25/2003	REQUIREMENT FOR RESTRICTION / ELECTION			
11	08/11/2003	IFW TSS PROCESSING BY TECH CENTER COMPLETE			
10	07/09/2003	CORRESPONDENCE ADDRESS CHANGE			
9	07/09/2003	CHANGE IN POWER OF ATTORNEY (MAY INCLUDE ASSOCIATE POA)			
8	03/27/2003	CASE DOCKETED TO EXAMINER IN GAU			
7	09/11/2002	APPLICATION DISPATCHED FROM OIPE			
6	09/10/2002	APPLICATION IS NOW COMPLETE			
5	08/19/2002	ADDITIONAL APPLICATION FILING FEES			
4	08/19/2002	A STATEMENT BY ONE OR MORE INVENTORS SATISFYING THE REQUIREMENT UNDER 35 USC 115, OATH OF THE APPLIC			
3	05/21/2002	NOTICE MAILED--APPLICATION INCOMPLETE--FILING DATE ASSIGNED			
2	04/27/2002	IFW SCAN & PACR AUTO SECURITY REVIEW			
1	04/18/2002	INITIAL EXAM TEAM NN			

Search Another: Application# [ ] Search

EXPLANATION OF PTA CALCULATION

EXPLANATION OF PTE CALCULATION

To go back use Back button on your browser toolbar.

Back to PALM | ASSIGNMENT | OASIS | Home page

UNITED STATES PATENT AND TRADEMARK OFFICE

Commissioner for Patents
United States Patent and Trademark Office
P.O. Box 1450
Alexandria, VA 22313-1450
www.uspto.gov

JUL 2 0 2006

Martin L. Stoneman
STONEMAN LAW OFFICES, LTD
3113 North 3rd Street
Phoenix, AX 85012

In re Application of: Joseph P. Schultz Serial No.: 10/124,985 Filed: April 17, 2002 Docket: P00456 Title: LIQUID DISPENSING AND ADMINISTERING SYSTEM	DECISION ON PETITION TO INVOKE SUPERVISORY AUTHORITY UNDER 37 CFR 1.181

This is a decision on the petition filed on May 4, 2005 to grant a telephone interview with a Primary Examiner and to withdraw the finality of the office action of the Office action from January 25, 2005.

The petition is **DISMISSED as moot**.

In his May 4, 2005 petition, petitioner requested a withdrawal of the finality of the Office action on January 25, 2005, and a grant of a phone interview with examiner. In support of his petition, petitioner shows that he was not allowed a phone interview, and thus was not able to adequately reach a mutual understanding with the examiner. Accordingly, petitioner requested that a final action should not be issued until after petitioner and examiner have conducted a phone interview.

The record shows that:

1) Following the petition, a notice of appeal was filed by petitioner on May 25, 2005.
2) After the petition, examiner held a phone interview with petitioner on June 9, 2005, although no agreement was met.
3) On July 26, 2005, petitioner filed an appeal brief appealing the rejection of Claims 1-6, 9-13, and 26-31.
4) On October 27, 2005, examiner re-opened examination, but still rejected Claims 1-6, 9-13, and 26-31.
5) On March 8. 2006, examiner held another phone interview with petitioner, although no agreement was met.
6) On March 27, 2006, petitioner requested reconsideration of the rejection of Claims 1-6, 9-13, and 26-31, in light of the appeal brief not being reviewed by an appeal conference. Petitioner also amended Claims 1 and 6.
7) On June 16, 2006, a final rejection of claims 1, 3-6, 9-13, and 26-31 was made.

Analysis

In his May 4, 2005 petition, petitioner requested a) a phone interview with a Primary Examiner; and b) a withdrawal of the finality of the Office action on January 25, 2005. Since the relief petitioner requested has already occurred, the petition is moot.

The record shows that petitioner has been in telephone contact with the examiner approved by the Primary Examiner after the petition, and the examiner subsequently, in combination with the appeal brief, withdrew the finality of the Office action. MPEP §1207.04 states in part:

"The examiner may, with approval from the supervisory patent examiner, reopen prosecution to enter a new ground of rejection after appellant's brief or reply brief has been filed."

The examiner appears to have re-opened prosecution based on the appeal from July 26, 2005. Although the non-final rejection was "Responsive to the communication filed on August 1, 2005" and there was no communication filed on August 1, 2005, the most recent and related communication by the applicant was on July 26, 2005, so it follows the non-final rejection was in fact due to the July 26, 2005 appeal brief.

Following the non-final rejection, the examiner conducted another phone interview approved by the Primary Examiner with applicant on March 8, 2006. Subsequent to this second phone interview, applicant amended claims 1 and 6 on March 27, 2006.

In view of this history, applicant did have an opportunity to interview the examiner, and the interview resulted in new grounds of rejection by the examiner. Ultimately, the finality at issue was withdrawn by the examiner and the applicant had two opportunities to interview the examiner. Accordingly, the petition is dismissed as moot.

Any inquiry regarding this decision should be directed to Allan Shoap, Special Program Examiner, at (571) 272-4514.

Frederick R. Schmidt, Director
Technology Center 3700

UNITED STATES PATENT AND TRADEMARK OFFICE

Commissioner for Patents
United States Patent and Trademark Office
P.O. Box 1450
Alexandria, VA 22313-1450
www.uspto.gov

COPY MAILED

OCT 15 2007

OFFICE OF PETITIONS

PATENT DOCKET ADMINISTRATOR
LOWENSTEIN SANDLER P.C.
65 LIVINGSTON AVENUE
ROSELAND NJ 07068

In re Application of	:	
Jeffrey Lubin et al.	:	
Application No. 10/124,995	:	DECISION ON PETITION
Filed: April 18, 2002	:	
Attorney Docket No. SAR 14473	:	

This is a decision on the petition under the unintentional provisions of 37 CFR 1.137(b), filed January 5, 2007, to revive the above-identified application.

The petition is **GRANTED**.

This application became abandoned for failure to timely submit corrected formal drawings on or before November 10, 2006, as required by the Notice of Allowance and Fee(s) Due and the Notice of Allowability, mailed August 10, 2006. Accordingly, the date of abandonment of this application is November 11, 2006.

The petition satisfies the requirements of 37 CFR 1.137(b) in that petitioner has supplied (1) the reply in the form of corrected formal drawings, (2) the petition fee of 1,500; and (3) a proper statement of unintentional delay.

The drawings have been approved by the USPTO draftsperson.

Telephone inquiries concerning this decision should be directed to Terri Williams at (571) 272-2991.

This application is being referred to Publishing Division for processing into a patent.

Liana Walsh
Petitions Examiner
Office of Petitions

UNITED STATES PATENT AND TRADEMARK OFFICE

Commissioner for Patents
United States Patent and Trademark Office
P.O. Box 1450
Alexandria, VA 22313-1450
www.uspto.gov

PHILIP S. JOHNSON
JOHNSON & JOHNSON
ONE JOHNSON & JOHNSON PLAZA
NEW BRUNSWICK, NJ 08933-7003

COPY MAILED

APR 1 5 2004

OFFICE OF PETITIONS

In re Application of :
Konstantin Ivanov, et al. :
Application No. 10/125,029 :
Filed: April 18, 2002 :
Attorney Docket No. ETH-1642 :

ON PETITION

This is a decision on the petition, filed March 30, 2004, under 37 CFR(c)(2) to withdraw the above-identified application from issue after payment of the issue fee.

The petition is **GRANTED**.

The above-identified application is withdrawn from issue for consideration of a submission under 37 CFR 1.114 (request for continued examination). See 37 CFR 1.313(c)(2).

Petitioner is advised that the issue fee paid on January 12, 2004, using a Certificate of Mailing under 37 CFR 1.8 dated January 8, 2004, in the above-identified application cannot be refunded. If, however, the above-identified application is again allowed, petitioner may request that it be applied towards the issue fee required by the new Notice of Allowance. [1]

Telephone inquiries relating to this decision should be directed to the undersigned at (703) 305-9220.

The application is being forwarded to Technology Center AU 3721 for further processing of the request for continued examination under 37 CFR 1.114.

Sherry D. Brinkley
Petitions Examiner
Office of Petitions
Office of the Deputy Commissioner
for Patent Examination Policy

---

[1]The request to apply the issue fee to the new Notice may be satisfied by completing and returning the new Issue Fee Transmittal Form PTOL-85(b), which includes the following language thereon: "Commissioner for Patents is requested to apply the Issue Fee and Publication Fee (if any) or re-apply any previously paid issue fee to the application identified above." Petitioner is advised that, whether a fee is indicted as being due or not, the Issue Fee Transmittal Form **must** be completed and timely submitted to avoid abandonment. Note the language on bold text on the first page of the Notice of Allowance and Fee(s) Due (PTOL-85).

UNITED STATES PATENT AND TRADEMARK OFFICE

COMMISSIONER FOR PATENTS
UNITED STATES PATENT AND TRADEMARK OFFICE
P.O. BOX 1450
ALEXANDRIA, VA 22313-1450
www.uspto.gov

Paper No.

MAIL

MAR - 3 2005

DIRECTOR OFFICE
TECHNOLOGY CENTER 2100

Tarek N. Fahmi
BLAKELY SOKOLOFF TAYLOR & ZAFMAN
12400 Wilshire Boulevard, Seventh Floor
Los Angeles, CA 90025

In re Application of:
Russell Rive
Application No. 10/125,047
Filed: April 17, 2002
For: METHOD AND SYSTEM TO MANAGE SERVICES FOR MULTIPLE MANAGED COMPUTER SYSTEMS

DECISION ON REQUEST TO WITHDRAW AS ATTORNEY OR AGENT

This is a decision on the Request To Withdraw from Representation filed December 03, 2004.

A grantable request to withdraw as attorney of record should indicate thereon the present mailing addresses of the attorney(s) who is/are withdrawing from the record and of the applicant. The request for withdrawal must be signed by every attorney seeking to withdraw or contain a clear indication that one attorney is signing on behalf of another/others. A request to withdraw will not be approved unless at least 30 (thirty) days would remain between the date of approval and the later of the expiration date of a time to file a response or the expiration date of the maximum time period which can be extended under 37 C.F.R. § 1. 136(a). The effective date of withdrawal being the date of decision and not the date of request. See M.P.E.P. § 402.06. 37 C.F.R. § 1.36 further requires that the applicant or patent owner be notified of the withdrawal of the attorney or agent.

The request filed December 03, 2004 meets all the requirements. Accordingly the request is **GRANTED**.

All future communications from the Office will be directed to the below-listed address until otherwise notified by applicant. This correspondence address is provided by the withdrawn attorney(s). Applicant is reminded of the obligation to promptly notify the Patent and Trademark Office (Office) of any change in correspondence address to ensure receipt of all communications from the Office.

for James R. Matthews

Vincent N. Trans
Special Program Examiner
Technology Center 2100
Computer Architecture, Software, and
Information Security
(571) 272-3613

cc: Andre L. Marais
SCHWEGMAN, LUNDBERG, WOESSNER & KLUTH, P.A.
1600 TCF TOWER
121 South Eighth Street
Minneapolis, MN 55402

UNITED STATES PATENT AND TRADEMARK OFFICE

Commissioner for Patents
United States Patent and Trademark Office
Washington, D.C. 20231
www.uspto.gov

Paper No. 9

SIERRA PATENT GROUP, LTD.
P.O. BOX 6149
STATELINE NV 89449

COPY MAILED

MAY 2 0 2003

OFFICE OF PETITIONS

In re Application of
David W. Gillespie et al
Application No. 10/125,066
Filed: April 17, 2002
Attorney Docket No. SYN-098

DECISION GRANTING PETITION
UNDER 37 CFR 1.137(f)

This is a decision on the petition, filed May 12, 2003, to revive the instant nonprovisional application under the unintentional provisions of 37 CFR 1.137(f).

The petition is **GRANTED**.

Petitioner states that the instant nonprovisional application is the subject of an application filed in a foreign country on May 8, 2002. However, the U.S. Patent and Trademark Office was unintentionally not notified of this filing within 45 days subsequent to the filing of the subject application in a foreign country.

In view of the above, this application became abandoned pursuant to 35 U.S.C. § 122(b)(2)(B)(iii) and 37 CFR 1.213(c) for failure to timely notify the Office of the filing of an application in a foreign country, or under a multilateral international agreement, that requires publication of applications 18 months after filing.

A petition under 37 CFR 1.137(f) must be accompanied by:

(1) the reply which is met by the notification of such filing in a foreign country or under a multinational treaty;

(2) the petition fee as set forth in 37 CFR 1.17(m); and

(3) a statement that the entire delay in filing the required reply from the due date of the reply until the filing of a grantable petition was unintentional.

The instant petition has been found to be in compliance with 37 CFR 1.137(f). Accordingly, the failure to timely notify the Office of a foreign or international filing within 45 days after the date of filing of such foreign or international application as provided by 35 U.S.C. § 122(b)(2)(B)(iii) and 37 CFR 1.213(c) is accepted as having been unintentionally delayed.

The previous Request and Certification under 35 U.S.C. § 122(b)(2)(B)(i) has been rescinded.

Any inquiries concerning this decision may be directed to Karen Creasy at (703) 305-8859.

This application is being forwarded to Technology Center Art Unit 2173 for examination in due course.

Frances Hicks

Frances Hicks
Lead Petitions Examiner
Office of Petitions
Office of the Deputy Commissioner
for Patent Examination Policy

UNITED STATES PATENT AND TRADEMARK OFFICE

COMMISSIONER FOR PATENTS
UNITED STATES PATENT AND TRADEMARK OFFICE
P.O. BOX 1450
ALEXANDRIA, VA 22313-1450
www.uspto.gov

SIERRA PATENT GROUP, LTD.
P O BOX 6149
STATELINE NV 89449

COPY MAILED
MAR 24 2004
OFFICE OF PETITIONS

In re Application of	:	
Gillespie et al.	:	
Application No. 10/125,066	:	Decision on Petition
Filed: April 17, 2002	:	
For: TOUCH SCREEN WITH USER	:	
INTERFACE ENHANCEMENT	:	

This is in reply to applicant's "Request for Refund of Petition Fee," which was filed on June 2, 2003.

The petition is dismissed.

Petitioner argues that the petition fee should be refunded because the application was not abandoned. Petitioner argues that filing a PCT Request in the PCT Receiving Office in the United States Patent and Trademark Office (Office) was notice to the Director that a foreign application was filed. Petitioner argues that while both the statute 35 U.S.C. 122(b)(2)(B)(iii) and the rule 37 CFR 1.213(c) specify that the Director must be notified neither the statute, the rule or the Notices of Proposed Rule specify how the Notice must be made. Since, the PCT application was filed in the U.S. Receiving Office, the Notice was given and the application should not be abandoned.

On April 17, 2002, the above identified was filed with a Nonpublication Request.

On May 8, 2002, Petitioner filed a PCT Application in the U.S. Receiving Office.

On May 31, 2002, Petitioner filed Request to Rescind the previous Nonpublication Request.

On May 8, 2002, a Patent Cooperation Treaty application, Application No. PCT/US02/14498, was filed. A review of the contents of the file of the above-identified application shows that no notification of the filing of the PCT application was filed within 45 days after the filing date of the PCT application. As a result of petitioner's failure to provide timely notice of the filing of the PCT application, pursuant to 35 U.S.C. § 122(b)(2)(B)(iii) and 37 CFR 1.213(c), the above-identified application became abandoned midnight Friday, June 21, 2002. See "Clarification of the United States Patent and Trademark Office's Interpretation of the Provisions of 35 U.S.C. 122(b)(2)(B)(ii)-(iv)," 1272

Off. Gaz. Pat. Office Notices 220 (July 1, 2003) and "Reminder that Rescission of a Nonpublication Request is Not Itself a Notice of Foreign Filing," 1270 Off. Gaz. Pat. Office Notice 20 (May 6, 2003).

On May 12, 2003, petitioner filed a "Petition for Revival of an Application for Patent Abandoned for Failure to Notify the Office of a Foreign or International Filing (37 CFR 1.137(f))."

On May 20, 2003, the petition to revive the instant application was granted.

As to the arguments that no specific notice is required and that filing an international application in the United States Receiving Office was a notification of foreign filing, these arguments are also not persuasive. 37 CFR 1.213(c) requires the applicant to provide notice, and 37 CFR 1.4(b) provides that each application must be complete in itself. An international application would not be placed into the file of an application that it relies upon for the benefit of an earlier filing date, and so applicant was required to file a separate paper pursuant to 37 CFR 1.4(b) in the above-identified application. Therefore, the mere filing of a PCT application is not the notification required by 35 U.S.C. § 122(b)(2)(B)(iii) and 37 CFR 1.213(c). Petitioner's attention is also directed to 37 CFR 1.4(c), which states:

> Since different matters may be considered by different branches or sections of the United States Patent and Trademark Office, each distinct subject, inquiry or order must be contained in a separate paper to avoid confusion and delay in answering papers dealing with different subjects.

Pursuant to 37 CFR 1.4(c), the separate paper was required to address a distinct subject, so a notification of foreign filing was required to be on a separate paper from another matter (such as a new application), and so filing a copy of the international application in the above-identified application would not have been notice of foreign filing.

The petition and required fee were filed by Petitioner, and the petition was granted by the Office. Since the fee was required for the petition to revive, the fee was not paid by mistake, and will not be refunded. See 35 U.S.C. 42(d), 37 CFR 1.26 and MPEP 607.02.

The application will be examined in <u>due course</u>.

Telephone inquiries regarding this communication should be directed to the undersigned at (703)308-8122.

Mark Polutta
Legal Advisor
Office of Patent Legal Administration
Office of the Deputy Commissioner
for Patent Examination Policy

UNITED STATES PATENT AND TRADEMARK OFFICE

Commissioner for Patents
United States Patent and Trademark Office
P.O. Box 1450
Alexandria, VA 22313-1450
www.uspto.gov

SUTHERLAND ASBILL & BRENNAN
999 PEACHTREE STREET, N.E.
ATLANTA, GA 30309

COPY MAILED

APR 2 0 2006

OFFICE OF PETITIONS

In re Application of :
Kenneth D. Hughes :
Application No. 10/125,073 : ON PETITION
Filed: April 17, 2002 :
Attorney Docket No. 38830/272602 :

This is a decision on the petition under 37 CFR 1.137(b), filed January 19, 2006, to revive the above-identified application.

The petition is **GRANTED**.

The above-identified application became abandoned for failure to reply within the meaning of 37 CFR 1.113 in a timely manner to the final Office action mailed January 11, 2005, which set a shortened statutory period for reply of three (3) months. A reply under 37 CFR 1.113 is limited to an amendment that *prima facie* places the application in condition for allowance or a Notice of Appeal (and appeal fee required by 37 CFR 1.17(b)). The amendment submitted on July 13, 2005 did not *prima facie* place the application in condition for allowance as noted in the Advisory Action mailed August 25, 2005. Therefore, as no Notice of Appeal (and appeal fee), Request for Continued Examination (RCE) or a continuing application was timely filed. A three (3) month extension of time under the provisions of 37 CFR 1.136(a) was obtained. Accordingly, the above-identified application became abandoned on July 12, 2005.

The petition satisfies the conditions for revival pursuant to the provisions of 37 CFR 1.137(b) in that (1) the reply in the form of a Request for Continued Examination (RCE); (2) the petition fee; and (3) the required statement of unintentional delay have been received. Accordingly, the reply to the final Office action of January 11, 2005 is accepted as having been unintentionally delay.

Telephone inquiries concerning this decision should be directed to Wan Laymon at (571) 272-3220.

This application is being referred to Technology Center AU 1723.

Wan Laymon

Wan Laymon
Petitions Examiner
Office of Petitions

UNITED STATES PATENT AND TRADEMARK OFFICE

COMMISSIONER FOR PATENTS
UNITED STATES PATENT AND TRADEMARK OFFICE
WASHINGTON, D.C. 20231
www.uspto.gov
DIW 10-02

Paper No. 9

LERNER AND GREENBERG, P.A.
PATENT ATTORNEYS AND ATTORNEYS AT LAW
POST OFFICE BOX 2480
HOLLYWOOD FL 33022-2480

COPY MAILED

OCT 17 2002

OFFICE OF PETITIONS

In re Application of Axel Reithofer Application No. 10/125,084 Filed: 18 April, 2002 Attorney Docket No. J&R-0854	DECISION GRANTING PETITION

This is a decision on the petition under 37 CFR 1.10(c) filed on 3 October, 2002, requesting that the above-identified application be accorded a filing date of 18 April, 2002, rather than the presently accorded filing date of 17 April, 2002.

The petition is **GRANTED**.

Petitioner alleges that the application was deposited in Express Mail service on 18 April, 2002. In support, on 3 October, 2002, petitioner supplied a copy of Express Mail Label No. EL758653288US (the same Express Mail number found on the itemized transmittal sheet accompanying the original application papers located in the official file). The "date-in" on the Express Mail Label, however, appears to be 04/17/02. The Express Mail label also contains an official USPS postmark, however, dated 18 April, 2002.

In view of the above, the petition is granted. No petition fee has been charged and none is due.

The application is being forwarded to the Office of Initial Patent Examination for correction of the filing date to **18 April, 2002**. Thereafter, the application will be forwarded to Technology Center 2800 for examination in due course.

Telephone inquiries specific to this matter should be directed to the undersigned at (703) 308-6918.

D Wood

Douglas I. Wood
Senior Petitions Attorney
Office of Petitions
Office of the Deputy Commissioner
for Patent Examination Policy

UNITED STATES PATENT AND TRADEMARK OFFICE

COMMISSIONER FOR PATENTS
UNITED STATES PATENT AND TRADEMARK OFFICE
P.O. BOX 1450
ALEXANDRIA, VA 22313-1450
www.uspto.gov

LERNER AND GREENBERG, PA
P O BOX 2480
HOLLYWOOD, FL 33022-2480

COPY MAILED

MAR 3 1 2005

OFFICE OF PETITIONS

In re Application of	:	
Axel Reithofer	:	
Application No. 10/125,084	:	
Filed: April 18, 2002	:	ON PETITION
Title of Invention:	:	
ELECTRICAL CIRCUIT	:	

This is a decision on the petition for Revival of an Application Abandoned Unavoidably Under 37 CFR 1.137(a) and Request for Refund, filed March 4, 2005. The petition is properly treated as a petition under 37 CFR 1.181 to withdraw the holding of abandonment.

The petition is **granted.**

The above-identified application became abandoned for failure to timely reply to the final Office action, mailed December 11, 2003. The Notices set a non-extendable three (3) month period for reply. No reply having been received, the above-identified application became abandoned July 1, 2004. A Notice of Abandonment was mailed on February 18, 2005.

Applicant avers non-receipt of the final Office action, mailed December 11, 2003. In support, Applicant has provided the necessary statements and copies of the docket record where the non-received Office action would have been entered had it been received and docketed. Applicant has demonstrated by a preponderance of the evidence that the Office action was not received.

The Notice of Abandonment is hereby withdrawn. A refund of the petition fee has been credited to deposit account 12-1099 as authorized in the instant petition.

The application file is being referred to Technology Center Art Unit 2819 for re-mailing of the Notice of Allowance and Issue

Fee Due, and Notice of Allowability. A courtesy copy of the Notices is also included with this petition.

Telephone inquiries concerning this matter should be directed to the undersigned at (703) 305-0014.

Derek L. Woods
Attorney/Advisor
Office of Petitions

Enclosure: final Office action, mailed December 11, 2003

UNITED STATES PATENT AND TRADEMARK OFFICE

Commissioner for Patents
United States Patent and Trademark Office
P.O. Box 1450
Alexandria, VA 22313-1450
www.uspto.gov

THE MATTHEWS FIRM
2000 BERING DRIVE
SUITE 700
HOUSTON TX 77057

COPY MAILED

AUG 07 2008

OFFICE OF PETITIONS

In re Application of :
Bill S. Chikirivao et al. :
Application No. 10/125,120 : ON PETITION
Filed: April 17, 2002 :
Attorney Docket No.Wellogiz-004-2 :

This is a decision on the petition under the unintentional provisions of 37 CFR 1.137(b), filed May 28, 2008, to revive the above-identified application.

The petition is **GRANTED**.

The application became abandoned for failure to timely file a reply within the meaning of 37 CFR 1.113 to the final Office action of June 29, 2007. The proposed reply required for consideration of a petition to revive must be a Notice of Appeal (and appeal fee required by 37 CFR 41.20(b)(2), an amendment that *prima facie* places the application in condition for allowance, a Request for Continued Examination and submission (37 CFR 1.114), or the filing of a continuing application under 37 CFR 1.53(b). See MPEP 711.03(c)(III)(A)(2). A one (1) month extension of time pursuant to the provisions of 37 CFR 1.136(a) was obtained. Accordingly, the date of abandonment of this application is October 30, 2007.

The petition satisfies the requirements of 37 CFR 1.137(b) in that petitioner has supplied (1) the reply in the form of a Request for Continued Examination (RCE) and fee of $810.00, and the submission required by 37 CFR 1.114; (2) the petition fee of $1540.00; and (3) a proper statement of unintentional delay.

An extension of time under 37 CFR 1.136 must be filed prior to the expiration of the maximum extendable period for reply. *See* In re Application of S., 8 USPQ2d 1630, 1631 (Comm'r Pats. 1988). Since the $1640.00 extension of time fee submitted with the petition on May 28, 2008, was subsequent to the maximum extendable period for reply, this fee is unnecessary and will be credited to petitioner's deposit account.

Telephone inquiries concerning this decision should be directed to JoAnne Burke at (571) 272-4584 .

This application is being referred to Technology Center AU 2176 for processing of the RCE and for appropriate action by the Examiner in the normal course of business on the amendment submitted in accordance with 37 CFR 1.114.

Irvin Dingle
Petitions Examiner
Office of Petitions

UNITED STATES PATENT AND TRADEMARK OFFICE

Commissioner for Patents
United States Patent and Trademark Office
P.O. Box 1450
Alexandria, VA 22313-1450
www.uspto.gov

MICROSOFT CORPORATION
ONE MICROSOFT WAY
REDMOND, WA 98052-6399

COPY MAILED

AUG 1 5 2007

OFFICE OF PETITIONS

In re Application of

Leyland, et al.

Application No. 10/125,121

Filed: April 17, 2002

Attorney Docket No. 190448.01

: DECISION ON PETITION

This is a decision on the petition under 37 CFR 1.137(b), filed May 30, 2007, to revive the above-identified application.

The petition is **GRANTED**.

This application became abandoned for failure to file a proper and timely response to the final Office action mailed March 16, 2006, which set a shortened statutory period for reply of three-months from its mailing date. No response was received within the allowable period and the application became abandoned on June 17, 2006. A Notice of Abandonment was mailed on April 6, 2007.

The Request for Continued Examination and amendment filed May 30, 2007, is noted.

The application file is being forwarded to Technology Center 2100, GAU 2137 for further processing.

Telephone inquiries concerning this decision should be directed to the undersigned at (571) 272-3222.

Kenya A. McLaughlin
Petitions Attorney
Office of Petitions

UNITED STATES PATENT AND TRADEMARK OFFICE

Commissioner for Patents
United States Patent and Trademark Office
P.O. Box 1450
Alexandria, VA 22313-1450
www.uspto.gov

FOLEY AND LARDNER
3000 K STREET NW, SUITE 500
WASHINGTON, DC 20007

COPY MAILED

SEP 19 2005

OFFICE OF PETITIONS

In re Application of	:
Harry A. Atwater, Jr. et al	:
Application No. 10/125,133	: DECISION GRANTING PETITION
Filed: April 17, 2002	: UNDER 37 CFR 1.313(c)(2)
Attorney Docket No. 047071-0104	:

This is a decision on the petition, filed September 12, 2005, under 37 CFR 1.313(c)(2) to withdraw the above-identified application from issue after payment of the issue fee.

The petition is **GRANTED**.

The above-identified application is withdrawn from issue for consideration of a submission under 37 CFR 1.114 (request for continued examination). See 37 CFR 1.313(c)(2).

Petitioner is advised that the issue fee paid on June 14, 2005 in the above-identified application cannot be refunded. If, however, the above-identified application is again allowed, petitioner may request that it be applied towards the issue fee required by the new Notice of Allowance.[1]

Telephone inquiries should be directed to the undersigned at (571) 272-3218.

This matter is being referred to Technology Center AU 2826 for processing of the request for continued examination under 37 CFR 1.114 and for consideration of the Information Disclosure Statement.

Frances Hicks
Petitions Examiner
Office of Petitions

---

[1] *The request to apply the issue fee to the new Notice may be satisfied by completing and returning the new Issue Fee Transmittal Form PTOL-85(b), which includes the following language thereon: "Commissioner for Patents is requested to apply the Issue Fee and Publication Fee (if any) or re-apply any previously paid issue fee to the application identified above." Petitioner is advised that, whether a fee is indicated as being due or not, the Issue Fee Transmittal Form* ***must*** *be completed and timely submitted to avoid abandonment. Note the language in bold text on the first page of the Notice of Allowance and Fee(s) Due (PTOL-85).*

UNITED STATES PATENT AND TRADEMARK OFFICE

Commissioner for Patents
United States Patent and Trademark Office
Washington, D.C. 20231
www.uspto.gov

Paper No. 5

HAMILTON, BROOK, SMITH & REYNOLDS, P.C.
530 VIRGINIA ROAD
P.O. BOX 9133
CONCORD, MA 01742-9133

COPY MAILED

AUG 0 5 2002

OFFICE OF PETITIONS

In re Application of :
Hanefeld, et al. :
Application No. 10/125,174 : ON PETITION
Filed: April 17, 2002 :
Attorney Docket No. 2256.1001-003 :

This is a decision on the "Petition Under 37 CFR 1.53(e) In Response To Notice Of Omitted Items," filed on July 2, 2002, requesting that the above-identified application be accorded a filing date of April 17, 2002, including Figures 4 and 5 as described in the specification.

The application was filed on April 17, 2002. However, on May 13, 2002, the Office of Initial Patent Examination (OIPE) mailed a "Notice To File Missing Parts" that stated the application had been accorded a filing date, but Figures 4 and 5 as described in the specification appear to have been omitted.

In response, on July 2, 2002, the instant petition was submitted. The petition was accompanied by a copy of applicant's postcard receipt that acknowledges receipt of three (3) sheets of drawings on April 17, 2002. The three (3) sheets of drawings contain Figures 1-5 and sheet 3 of the drawings contains Figures 4 and 5.

Sheet 3 of the three (3) pages of drawings, containing Figures 4 and 5 as described in the specification, has been located in the application file. Therefore, the application was complete for filing date purposes on filing.

In view of the above, the petition is granted.

The $130.00 petition fee submitted on July 2, 2002 will be refunded to deposit account no. 08-0380.

This application will be returned to OIPE for further processing with a filing date of April 17, 2002, using the one sheet of drawings containing Figures 4 and 5 as described in the specification, supplied on that date.

Telephone inquiries concerning this matter may be directed to Petitions Attorney Edward Tannouse at (703) 306-9200.

Edward J. Tannouse
Petitions Attorney
Office of Petitions
Office of the Deputy Commissioner
for Patent Examination Policy

Beverly M. Flanagan
Supervisory Petitions Examiner
Office of Petitions
Office of the Deputy Commissioner
for Patent Examination Policy

UNITED STATES PATENT & TRADEMARK OFFICE
Washington, D.C. 20231

REQUEST FOR PATENT FEE REFUND

1 Date of Request: 7/25/02 | 2 Serial/Patent # 10/125,174

3 Please refund the following fee(s):		4 PAPER NUMBER	5 DATE FILED	6 AMOUNT
	Filing			$
	Amendment			$
	Extension of Time			$
	Notice of Appeal/Appeal			$
X	Petition	3	7/2/02	$ 130 —
	Issue			$
	Cert of Correction/Terminal Disc.			$
	Maintenance			$
	Assignment			$
	Other			$

7 TOTAL AMOUNT OF REFUND: $ 130 —

8 TO BE REFUNDED BY:

	Treasury Check
X	Credit Deposit A/C #:

9 08--0380

10 REASON:

	Overpayment
	Duplicate Payment
X	No Fee Due (Explanation):

PTO error

11 REFUND REQUESTED BY:

TYPED/PRINTED NAME: E - Tannouse TITLE: Pet. Atty.

SIGNATURE: [signature] PHONE: 306-9200

OFFICE: 4700

****

THIS SPACE RESERVED FOR FINANCE USE ONLY:

APPROVED: Alicia Kelley DATE: 8/5/02

Instructions for completion of this form appear on the back. After completion, attach white and yellow copies to the official file and mail or hand-carry to:

Office of Finance
Refund Branch
Crystal Park One, Room 802B

FORM PTO 1577
(01/90)

UNITED STATES PATENT AND TRADEMARK OFFICE

COMMISSIONER FOR PATENTS
UNITED STATES PATENT AND TRADEMARK OFFICE
WASHINGTON, D.C. 20231
www.uspto.gov

Paper No. 5

JONES, WALKER WAECHTER POITEVENT
CARRERE & DENEGRE L.L.P.
5TH FLOOR, FOUR UNITED PLAZA
8555 UNITED PLAZA BOULEVARD
BATON ROUGE, LA 70809

COPY MAILED

JUL 2 6 2002

OFFICE OF PETITIONS

In re Application of	:	
Glenn Smith	:	
Application No. 10/125,178	:	NOTICE
Filed: April 17, 2002	:	
Attorney Docket No. 13680/93977-00	:	

This is a notice regarding your request for acceptance of a fee deficiency submission under 37 CFR 1.28. On September 1, 1998, the Court of Appeals for the Federal Circuit held that 37 CFR 1.28(c) is the sole provision governing the time for correction of the erroneous payment of the issue fee as a small entity. **See DH Technology v. Synergystex International, Inc. 154 F.3d 1333, 47 USPQ2d 1865 (Fed. Cir. Sept. 1, 1998).**

The Office no longer investigates or rejects original or reissue applications under 37 CFR 1.56. **1098 Off. Gaz. Pat. Office 502 (January 3, 1989).** Therefore, nothing in this Notice is intended to imply that an investigation was done.

Your fee deficiency submission under 37 CFR 1.28 is hereby **ACCEPTED**.

Inquiries related to this communication should be directed to the Office of Petitions Staff at (703) 305-9285.

This file is being forwarded to Technology Center 3600.

Irvin Dingle
Petitions Examiner
Office of Petitions
Office of the Deputy Commissioner
for Patent Examination Policy

UNITED STATES PATENT AND TRADEMARK OFFICE

Commissioner for Patents
United States Patent and Trademark Office
Washington, D.C. 20231
www.uspto.gov

Paper No. 7

AKIN, GUMP, STRAUSS, HAUER & FELD, L.L.P.
ONE COMMERCE SQUARE, SUITE 2200
2005 MARKET STREET
PHILADELPHIA PA 19103

COPY MAILED

DEC 1 3 2002

OFFICE OF PETITIONS

In re Application of	:	
David Mark Milne-Robertson,	:	
Peter Gordon Stanton, and	:	
Nicholas Francis Cahir	:	
Application No. 10/125,187	:	DECISION GRANTING
Filed: April 18, 2002	:	PETITION
Attorney Docket No. 10338-9	:	
Title: NOVEL PEPTIDES FOR DEVELOPMENT OF DIAGNOSTIC AND THERAPEUTIC AGENTS AND METHODS OF USING SAME	:	

This is a decision on the "Petition under 37 CFR §1.182 to Accept Renumbered Pages of Original Specification with Original Filing Date", filed August 20, 2002, which is properly treated as a petition under 37 CFR §1.53(b), requesting that the substitute specification be accorded a filing date of April 18, 2002 as the original disclosure.

On April 18, 2002, the above-identified application was filed. On May 20, 2002, the Office of Initial Patent Examination (OIPE) mailed a "Notice of Omitted Item(s) in a Nonprovisional Application" (Notice), stating that the application had been accorded a filing date of April 18, 2002, and advising applicant that page 88 of the specification appeared to have been omitted. The Notice further indicated that the basic filing fee, an executed oath or declaration, and the fee associated with the

late filing of an oath or declaration would be required. The Notice set a two-month period for reply.

In response, on August 20, 2002, applicants filed the present petition. The petition is further accompanied by a declaration, a filing fee, the fee associated with the late filing of an oath or declaration, and the fees associated with the filing of additional claims[1].

In the petition, applicant has stated that the specification submitting on filing contained a pagination error. Petitioner has further attested over his registration number that no new matter has been submitted with this specification, and that it is an exact copy of that which was submitted on April 18, 2002.

Petitioner has also submitted a request that the petition fee not be charged to his account, as the "application was complete as filed and only required repagination".

The petition under 37 CFR §1.53(b) is **GRANTED IN PART**.

Petitioner's request as to the acceptance of the substitute specification is **GRANTED**. The Patent and Trademark Office is relying on petitioner's duty of candor and good faith and accepting the statement that with the exception of the pagination, the substitute specification is an exact copy of that submitted on April 18, 2002.

Regarding petitioner's request that the petition fee be waived, this request is **DISMISSED**. The petition fee of $130.00 will not be refunded, as this petition was not necessitated by any error on the part of the Office. It was petitioner's error in numbering his pages which necessitated the mailing of the Notice. When determining whether the Office will waive a petition fee, the Commissioner looks to whether the petition was necessitated by an error on the part of the Office, and not whether the application "only required repagination".

The application file is being returned to the Office of Initial Patent Examination for further processing with a filing date of April 18, 2002, using the substitute specification submitted on August 20, 2002.

---

1 Petitioner has failed to request a one-month extension of time. This fee will be charged to petitioner's Deposit Account, as authorized in the petition.

Any inquiries related to this decision should be directed to Petitions Attorney Paul Shanoski at (703) 305-0011.

for

Beverly Flanagan
Supervisory Petitions Examiner
Office of Petitions
Office of the Deputy Commissioner
for Patent Examination Policy

UNITED STATES PATENT AND TRADEMARK OFFICE

Commissioner for Patents
United States Patent and Trademark Office
P.O. Box 1450
Alexandria, VA 22313-1450
www.uspto.gov

JOSEPH S. TRIPOLI
THOMSON MULTIMEDIA LICENSING INC.
2 INDEPENDENCE WAY
P.O. BOX 5312
PRINCETON NJ 08543-5312

COPY MAILED
SEP 2 2 2006
OFFICE OF PETITIONS

In re Application of	:	
Diehl et al.	:	
Application No. 10/125,207	:	DECISION ON PETITION
Filed: April 18, 2002	:	
Attorney Dkt No.:PF 010037	:	

This is a decision on the petition under 37 CFR 1.137(b), filed August 4, 2006, to revive the above-identified application.

This above-identified application became abandoned for failure to file a reply to a non-final Office Action mailed December 14, 2005. The non-final Office Action set a three (3) month shortened statutory period for reply. No extensions of time were obtained under the provisions of 37 CFR §1.136(a). Accordingly, this application became abandoned on March 15, 2006. This decision precedes the mailing of a Notice of Abandonment.

This petition is hereby **GRANTED**.

Petitioner submitted a request for a three (3) month extension of time with the instant petition. However, pursuant to 37 CFR 1.136, an extension of time must be filed prior to the expiration of the maximum extendable period for reply. See In re Application of S., 8 USPQ2d 1630, 1631 (Comm'r Pats. 1988) Petitioner's six (6) month maximum extendable period expired on June 15, 2006. Petitioner is ineligible for any extensions of time. Petitioner is entitled to a refund of the previously submitted extension of time fee of $1020. The extension of time fee will be refunded to deposit account 07-0832.

The Office hereby acknowledges the receipt of the amendment submitted with the instant petition.

This application is being forwarded to Technology Center 2100 for further processing.

Telephone inquiries concerning this matter should be directed to the undersigned at (571) 272-3215.

Charlema R. Grant
Petitions Attorney
Office of Petitions

UNITED STATES PATENT AND TRADEMARK OFFICE

Commissioner for Patents
United States Patent and Trademark Office
P.O. Box 1450
Alexandria, VA 22313-1450
www.uspto.gov
DIW Feb-06

DARBY & DARBY P.C.
JOSEPH R. ROBINSON
P.O. BOX 5257
NEW YORK NY 10150-5257

COPY MAILED

FEB 15 2006

OFFICE OF PETITIONS

In re Application of	:	
Tezuka et al.	:	
Application No. 10/125,213	:	DECISION ON PETITION
Filed: 18 April, 2002	:	
Atty Docket No. 09634/000L274-US0	:	

This is a decision on the petition filed on 25 January, 2006, under 37 CFR 1.137(b),[1] to revive the above-identified application.

The petition is **GRANTED**.

The application became abandoned on 18 December, 2004, for failure to timely reply to the non-final Office action mailed on

---

[1] Effective December 1, 1997, the provisions of 37 CFR 1.137(b) now provide that where the delay in reply was unintentional, a petition may be filed to revive an abandoned application or a lapsed patent pursuant to 37 CFR 1.137(b). A grantable petition filed under the provisions of 37 CFR 1.137(b) must be accompanied by:

(1) the required reply, unless previously filed. In a nonprovisional application abandoned for failure to prosecute, the required reply may be met by the filing of a continuing application. In a nonprovisional utility or plant application filed on or after June 8, 1995, and abandoned for failure to prosecute, the required reply may also be met by the filing of a request for continuing examination in compliance with § 1.114. In an application or patent, abandoned or lapsed for failure to pay the issue fee or any portion thereof, the required reply must be the payment of the issue fee or any outstanding balance thereof. In an application, abandoned for failure to pay the publication fee, the required reply must include payment of the publication fee.

(2) the petition fee as set forth in 37 CFR 1.17(m);

(3) a statement that the entire delay in filing the required reply from the due date for the reply until the filing of a grantable petition pursuant to 37 CFR 1.137(b) was unintentional. The Commissioner may required additional information where there is a question whether the delay was unintentional; and

(4) any terminal disclaimer (and fee as set forth in 37 CFR 1.20(d)) required pursuant to 37 CFR 1.137(c)).

17 September, 2004, which set a three (3) month shortened statutory period for reply. No extensions of time under 37 CFR 1.136(a) were obtained. The filing of the present petition precedes the mailing of Notice of Abandonment.

Petitioners have filed an amendment as the required reply.

An extension of time under 37 CFR 1.136 must be filed prior to the expiration of the maximum extendable period for reply.[2] The three-month extension request filed on 25 January, 2006, was submitted more than five (5) months after the end of the period for reply to the Office communication mailed on 17 September, 2004, and therefore is unnecessary. The extension of time fee paid on 25 January, 2006, will be credited to counsel's deposit account, No. 04-0100, as authorized.

This application is being referred to Technology Center 2674 for further processing.

Telephone inquiries concerning this matter may be directed to the undersigned at (571)272-3231.

DWood

Douglas I. Wood
Senior Petitions Attorney
Office of Petitions

[2] See In re Application of S., 8 USPQ2d 1630, 1631 (Comm'r Pats. 1988).

UNITED STATES PATENT AND TRADEMARK OFFICE

Commissioner for Patents
United States Patent and Trademark Office
P.O. Box 1450
Alexandria, VA 22313-1450
www.uspto.gov

DARBY & DARBY P.C.
Joseph R. Robinson
P.O. Box 5257
New York, NY 10150-5257

COPY MAILED

AUG 0 6 2007

OFFICE OF PETITIONS

In re Application of Tezuka et al. :
Application No. 10/125,213 :
Filing Date: April 18, 2002 :
Attorney Docket No. 09634/000L274-US0 :

Decision on Petition

This is a decision on the petition under 37 CFR 1.181, filed February 12, 2007, to withdraw the holding of abandonment.

The petition is **granted.**

Facts:

A Notice of Allowance was mailed May 2, 2006. The Notice set a three (3) month statutory period for reply and required submission of the $1,400 issue fee and $300 publication fee.

The Notice was returned undelivered to the Office on May 9, 2006.

Petitioner did not pay the issue fee or publication fee on or before August 2, 2006.

A copy of the papers originally mailed May 9, 2006, including the Notice of Allowance, were mailed to petitioner on October 5, 2006.

The issue fee, publication fee, and a completed PTOL-85b were filed October 12, 2006.

A Notice of Abandonment was mailed February 15, 2007.

Discussion:

Petitioner states the application is abandoned because petitioner never received the Notice of Allowance. A review of the evidence verifies the Notice was not delivered to petitioner. Therefore, the requested relief will be granted.

The Notice of Abandonment is hereby vacated and the holding of abandonment withdrawn.

The Office of Publications will be informed of the instant decision and the application will be issued as a patent in due course.

Telephone inquiries regarding this communication should be directed to Petitions Attorney Steven Brantley at (571) 272-3203.

Charles Steven Brantley
Senior Petitions Attorney
Office of Petitions

UNITED STATES PATENT AND TRADEMARK OFFICE

Commissioner for Patents
United States Patent and Trademark Office
P.O. Box 1450
Alexandria, VA 22313-1450
www.uspto.gov

JAY L. CHASKIN
CANTOR COLBURN LLP
55 GRIFFIN ROAD SOUTH
BLOOMFIELD, CT 06002

COPY MAILED
SEP 13 2006
OFFICE OF PETITIONS

In re Application of :
Yves Trousset et al. :
Application No. 10/125,242 : ON PETITION
Filed: April 17, 2002 :
Attorney Docket No. 14XZ00135 :

This is a decision on the petition filed April 18, 2006 under 37 CFR 1.137(b),[1] to revive the above-identified application.

The petition under 37 CFR 1.137 (b) is **GRANTED**.

This application became abandoned December 14, 2005 for failure to timely pay the issue fee on or before December 13, 2005. Accordingly, a Notice of Abandonment was mailed January 23, 2006.

The issue fee, publication fee and petition fee have been applied. All other requirements of 37 CFR 1.137(b) having now been met, this application file is being forwarded to the Publishing Division to be processed into a patent.

Telephone inquiries concerning this matter may be directed to the undersigned Petitions Attorney at (571) 272-3212.

Patricia Faison-Ball
Senior Petitions Attorney
Office of Petitions

---

[1] Effective December 1, 1997, the provisions of 37 CFR 1.137(b) now provide that where the delay in reply was unintentional, a petition may be filed to revive an abandoned application or a lapsed patent pursuant to 37 CFR 1.137(b). A grantable petition filed under the provisions of 37 CFR 1.137(b) must be accompanied by:

(1) the required reply, unless previously filed. In a nonprovisional application abandoned for failure to prosecute, the required reply may be met by the filing of a continuing application. In a nonprovisional application filed on or after June 8, 1995, and abandoned for failure to prosecute, the required reply may also be met by the filing of a request for continued examination in compliance with § 1.114. In an application or patent, abandoned or lapsed for failure to pay the issue fee or any portion thereof, the required reply must be the payment of the issue fee or any outstanding balance thereof.

(2) the petition fee as set forth in 37 CFR 1.17(m);

(3) a statement that the entire delay in filing the required reply from the due date for the reply until the filing of a grantable petition pursuant to 37 CFR 1.137(b) was unintentional. The Commissioner may required additional information where there is a question whether the delay was unintentional; and

(4) any terminal disclaimer (and fee as set forth in 37 CFR 1.20(d)) required pursuant to 37 CFR 1.137(c)).

SPE RESPONSE FOR CERTIFICATE OF CORRECTION 10/125312

Paper No.: 07202006

DATE : 11/15/05

TO SPE OF : ART UNIT 2882

SUBJECT : Request for Certificate of Correction on Patent No.: 6928139B2

A response is requested with respect to the accompanying request for a certificate of correction.

Please complete this form and return with file, within 7 days to:
Palm location **7580, Certificates of Correction Branch – South Tower – 9A22**
If response is for an IFW, **return to employee (named below) via PUBSCofC Team in MADRAS.**
With respect to the change(s) requested, correcting Office and/or Applicant's errors, should the patent read as shown in the certificate of correction (COCIN)? No new matter should be introduced, nor should the scope or meaning of the claims be changed.

Virginia Tolbert

Thank You For Your Assistance

Certificates of Correction Branch
Tel. No. 703-308-9390 ext. 113

The request for issuing the above-identified correction(s) is hereby:
Note your decision on the appropriate box.

- [X] **Approved** — **All** changes apply.
- [ ] **Approved in Part** — Specify below which changes **do not** apply.
- [ ] **Denied** — State the reasons for denial below.

Comments:

EDWARD J. GLICK
SUPERVISORY PATENT EXAMINER
SPE

2882
Art Unit

UNITED STATES PATENT AND TRADEMARK OFFICE

COMMISSIONER FOR PATENTS
UNITED STATES PATENT AND TRADEMARK OFFICE
P.O. BOX 1450
ALEXANDRIA, VA 22313-1450
www.uspto.gov

Fish & Richardson P.C.
12390 El Camino Real
San Diego CA 92130

COPY MAILED

MAY 18 2005

OFFICE OF PETITIONS

In re Application of
Hall et al. :
Application No. 10/125,332 : DECISION ON PETITION
Filed: April 17, 2002 :
Attorney Docket No. 0666-019002/USC2752 :

This is a decision on the petition under 37 CFR 1.137(a), filed March 7, 2005, to revive the above-identified application.

The petition under 37 CFR 1.137(a) is **DISMISSED**.

Any request for reconsideration of this decision must be submitted within **TWO (2) MONTHS** from the mail date of this decision. The reconsideration request should include a cover letter entitled "Renewed Petition under 37 CFR 1.137." Extensions of time under 37 CFR 1.136(a) are permitted.

The above-identified application became abandoned for failure to timely pay the issue fee and the publication fee in response to the Notice of Allowance and Fee(s) Due mailed on October 20, 2004, which set a three-month statutory period to respond. The above-identified application became abandoned on January 21, 2005. The present petition preceded the mailing of a Notice of Abandonment.

A grantable petition to revive an abandoned application under 37 CFR 1.137(a) must be accompanied by:

(1) The reply required to the outstanding Office action or notice, unless previously filed. In a nonprovisional application abandoned for failure to prosecute, the required reply may be met by the filing of a continuing application. In a nonprovisional utility or plant application filed on or after June 8, 1995, and abandoned for failure to prosecute, the required reply may also be met by the filing of a request for continued examination in compliance with § 114. In an application or patent, abandoned or lapsed for failure to pay the issue fee or any portion thereof, the required reply must include payment of the issue fee or any outstanding balance. In an application, abandoned for failure to pay the publication fee, the required reply must include payment of the publication fee.

(2) The petition fee as set forth in 37 CFR 1.17(l);

(3) A statement that the entire delay in filing the required reply from the due date for the reply until the filing of a grantable petition pursuant to this paragraph was unavoidable. The Director may require additional information where there is a question whether the delay was unintentional; and

(4) Any terminal disclaimer (and fee set forth in § 1.20(d)) required pursuant to paragraph (d) of this section.

This petition lacks item (3) above.

The Commissioner may revive an abandoned application if the delay in responding to the relevant outstanding Office requirement is shown to the satisfaction of the Commissioner to be "unavoidable".[3] Decisions on reviving abandoned applications on the basis of "unavoidable" delay have adopted the reasonably prudent person standard in determining if the delay was unavoidable:

> The word 'unavoidable' . . . is applicable to ordinary human affairs, and requires no more or greater care or diligence than is generally used and observed by prudent and careful men in relation to their most important business. It permits them in the exercise of this care to rely upon the ordinary and trustworthy agencies of mail and telegraph, worthy and reliable employees, and such other means and instrumentalities as are usually employed in such important business. If unexpectedly, or through the unforeseen fault or imperfection of these agencies and instrumentalities, there occurs a failure, it may properly be said to be unavoidable, all other conditions of promptness in its rectification being present.[4]

The showing of record is inadequate to establish unavoidable delay within the meaning of 35 U.S.C. § 133 and 37 CFR 1.137(a).[5] Specifically, an application is "unavoidably" abandoned only where petitioner, or counsel for petitioner, takes all action necessary for a proper response to the outstanding Office action, but through the intervention of unforeseen circumstances, such as failure of mail, telegraph, facsimile, or the negligence of otherwise reliable employees, the response is not timely received in the Office.[6]

---

[3] 35 U.S.C. § 133.

[4] In re Mattullath, 38 App. D.C. 497, 514-15 (1912)(quoting Ex parte Pratt, 1887 Dec. Comm'r Pat. 31, 32-33 (1887)); see also Winkler v. Ladd, 221 F. Supp. 550, 552, 138 USPQ 666, 167-68 (D.D.C. 1963), aff'd, 143 USPQ 172 (D.C. Cir. 1963); Ex parte Henrich, 1913 Dec. Comm'r Pat. 139, 141 (1913). In addition, decisions on revival are made on a "case-by-case basis, taking all the facts and circumstances into account." Smith v. Mossinghoff, 671 F.2d 533, 538, 213 USPQ 977, 982 (D.C. Cir. 1982). Finally, a petition cannot be granted where a petitioner has failed to meet his or her burden of establishing that the delay was "unavoidable." Haines v. Quigg, 673 F. Supp. 314, 316-17, 5 USPQ2d 1130, 1131-32 (N.D. Ind. 1987).

[5] See MPEP 711(c)(III)(C)(2) for a discussion of the requirements for a showing of unavoidable delay.

[6] Ex parte Pratt, 1887 Dec. Comm'r Pat. 31 (Comm'r Pat. 1887).

With regard to requirement (3):

In the present petition, applicants assert that they never received the Notice of Allowance as evidenced by the PAIR report showing the correspondence was returned to the USPTO. Applicants state that because the correspondence never reached applicants, it is logical that the abandonment was unavoidable.

A review of the written record indicates that the Notice of Allowance and Fee(s) Due was properly mailed to the address of record as it existed on October 20, 2004. A review of the record indicates that the correspondence was returned to the USPTO with an indication from the USPS that the forwarding time had expired and to return to sender. Therefore, it appears that applicants did not receive the Notice of Allowance and Fee(s) Due because they failed to file a change of correspondence address with the USPTO. Moreover, applicants did not file a change of correspondence address with the USPTO until March 7, 2005, over four months after the mailing of the Notice of Allowance and Fee(s) Due.

The belated notification to the Office of the change of correspondence address does not constitute proper notification as to establish unavoidable delay. Applicants are responsible for promptly notifying the Office of any change of address. The Office further notes that where an application becomes abandoned as a consequence of a change of correspondence address an adequate showing of "unavoidable" delay requires a showing that applicants exercised due care to promptly notify the Office of the change of address and file a timely notification of the change of address in the application.[5] Furthermore, a delay resulting from the lack of knowledge or improper application of the patent statute, rules of practice or the MPEP does not constitute an "unavoidable" delay.[6]

Because applicants did not provide a sufficient showing that the delay was unavoidable within the meaning of 35 USC § 151 and 37 CFR 1.137(a), the petition is **dismissed**. In any renewed petition under 37 CFR 1.137(a), applicants must submit a thorough explanation, including any documentary evidence, to support a showing of unavoidable delay.

Alternative Venue:

Instead of filing a renewed petition under 37 CFR 1.137(a), petitioner should consider filing a petition pursuant to 37 CFR 1.137(b) on the basis of **unintentional** delay.

A grantable petition pursuant to 37 CFR 1.137(b) must be accompanied by:

> (1) The reply required to the outstanding Office action or notice, unless previously filed. In nonprovisional application abandoned for failure to prosecute, the required reply may be met

---

[5] MPEP 711.03(c)(III)(C)(2)

[6] See Haines v. Quigg, 673 F. Supp. 314, 317, 5 USPQ2d 1130, 1132 (N.D. Ind. 1987), Vincent v. Mossinghoff, 230 USPQ 621, 624 (D.D.C. 1985); Smith v. Diamond, 209 USPQ 1091 (D.D.C. 1981); Potter v. Dann, 201 USPQ 574 (D.D.C. 1978); Ex parte Murray, 1891 Dec. Comm'r Pat. 130, 131 (1891).

by the filing of a continuing application. In a nonprovisional utility or plant application filed on or after June 8, 1995, and abandoned for failure to prosecute, the required reply may also be met by the filing of a request for continued examination in compliance with § 114. In an application or patent, abandoned or lapsed for failure to pay the issue fee or any portion thereof, the required reply must include payment of the issue fee or any outstanding balance. In an application, abandoned for failure to pay the publication fee, the required reply must include payment of the publication fee.

(2) The petition fee as set forth in 37 CFR 1.17(m), an additional $1,500.00 for a large entity;

(3) A statement that the entire delay in filing the required reply from the due date for the reply until the filing of a grantable petition pursuant to this paragraph was unintentional. The Director may require additional information where there is a question whether the delay was unintentional; and

(4) Any terminal disclaimer (and fee set forth in § 1.20(d)) required pursuant to paragraph (d) of this section.

Further correspondence with respect to this matter should be addressed as follows and **to the attention of Senior Petitions Attorney Christina Tartera Donnell:**

By mail: Mail Stop Petition
Commissioner for Patents
P.O. Box 1450
Alexandria, VA 22313-1450

By FAX: (703) 872-9306
Attn: Office of Petitions

By hand: Customer Service Window
Randolph Building
401 Dulany Street
Alexandria, VA 22314

The Office finance records indicate that applicants paid a $110.00 fee for the petition under 37 CFR 1.137(a). The petition fee increased to $500.00. Therefore, the Office charged counsel's Deposit Account for the difference owed in the amount of $390.00, as authorized.

Telephone inquiries related to this decision may be directed to the undersigned at (571) 272-3211.

Christina Tartera Donnell

Christina Tartera Donnell
Senior Petitions Attorney
Office of Petitions

UNITED STATES PATENT AND TRADEMARK OFFICE

Commissioner for Patents
United States Patent and Trademark Office
P.O. Box 1450
Alexandria, VA 22313-1450
www.uspto.gov

Fish & Richardson P.C.
12390 El Camino Real
San Diego CA 92130

COPY MAILED

SEP 0 8 2005

OFFICE OF PETITIONS

In re Application of
Hall et al. :
Application No. 10/125,332 : DECISION ON PETITION
Filed: April 17, 2002 :
Attorney Docket No. 0666-019002/USC2752 :

This is a decision on the renewed petition under 37 CFR 1.137(a), submitted by facsimile transmission on July 18, 2005, to revive the above-identified application.

The renewed petition under 37 CFR 1.137(a) is **DISMISSED**.

Any request for reconsideration of this decision must be submitted within **TWO (2) MONTHS** from the mail date of this decision. The reconsideration request should include a cover letter entitled "Renewed Petition under 37 CFR 1.137(a)." Extensions of time under 37 CFR 1.136(a) are permitted.

The above-identified application became abandoned for failure to timely pay the issue fee and the publication fee in response to the Notice of Allowance and Fee(s) Due mailed on October 20, 2004, which set a three-month statutory period to respond. The above-identified application became abandoned on January 21, 2005. The present petition preceded the mailing of a Notice of Abandonment.

A grantable petition to revive an abandoned application under 37 CFR 1.137(a) must be accompanied by:

(1) The reply required to the outstanding Office action or notice, unless previously filed. In a nonprovisional application abandoned for failure to prosecute, the required reply may be met by the filing of a continuing application. In a nonprovisional utility or plant application filed on or after June 8, 1995, and abandoned for failure to prosecute, the required reply may also be met by the filing of a request for continued examination in compliance with § 114. In an application or patent, abandoned or lapsed for failure to pay the issue fee or any portion thereof, the required reply must include payment of the issue fee or any outstanding balance. In an application, abandoned for failure to pay the publication fee, the required reply must include payment of the publication fee.

(2) The petition fee as set forth in 37 CFR 1.17(l);

(3) A statement that the entire delay in filing the required reply from the due date for the reply until the filing of a grantable petition pursuant to this paragraph was unavoidable. The Director may require additional information where there is a question whether the delay was unintentional; and

(4) Any terminal disclaimer (and fee set forth in § 1.20(d)) required pursuant to paragraph (d) of this section.

Again, this petition lacks item (3) above.

The Director may revive an abandoned application if the delay in responding to the relevant outstanding Office requirement is shown to the satisfaction of the Director to be "unavoidable".[3] Decisions on reviving abandoned applications on the basis of "unavoidable" delay have adopted the reasonably prudent person standard in determining if the delay was unavoidable:

> The word 'unavoidable' . . . is applicable to ordinary human affairs, and requires no more or greater care or diligence than is generally used and observed by prudent and careful men in relation to their most important business. It permits them in the exercise of this care to rely upon the ordinary and trustworthy agencies of mail and telegraph, worthy and reliable employees, and such other means and instrumentalities as are usually employed in such important business. If unexpectedly, or through the unforeseen fault or imperfection of these agencies and instrumentalities, there occurs a failure, it may properly be said to be unavoidable, all other conditions of promptness in its rectification being present.[4]

The showing of record is still inadequate to establish unavoidable delay within the meaning of 35 U.S.C. § 133 and 37 CFR 1.137(a).

With regard to requirement (3):

In the present renewed petition, applicants failed to present any new arguments to support their assertion that the application was unavoidably abandoned. Again, applicants assert that they never received the Notice of Allowance and Fee(s) Due as evidenced by the PAIR report showing the correspondence was returned to the USPTO. A copy of the PAIR report accompanies the petition. Applicants' counsel states that he has reviewed the file of this application and found no record of receiving the Notice of Allowance. Additionally, applicants state that any delay was unavoidable

---

[3] 35 U.S.C. § 133.

[4] In re Mattullath, 38 App. D.C. 497, 514-15 (1912)(quoting Ex parte Pratt, 1887 Dec. Comm'r Pat. 31, 32-33 (1887)); see also Winkler v. Ladd, 221 F. Supp. 550, 552, 138 USPQ 666, 167-68 (D.D.C. 1963), aff'd, 143 USPQ 172 (D.C. Cir. 1963); Ex parte Henrich, 1913 Dec. Comm'r Pat. 139, 141 (1913). In addition, decisions on revival are made on a "case-by-case basis, taking all the facts and circumstances into account." Smith v. Mossinghoff, 671 F.2d 533, 538, 213 USPQ 977, 982 (D.C. Cir. 1982). Finally, a petition cannot be granted where a petitioner has failed to meet his or her burden of establishing that the delay was "unavoidable." Haines v. Quigg, 673 F. Supp. 314, 316-17, 5 USPQ2d 1130, 1131-32 (N.D. Ind. 1987).

because the Notice of Allowance never reached applicants and they did not have an opportunity to respond to the Notice within the set time period.

A review of the written record indicates that the Notice of Allowance and Fee(s) Due was properly mailed to the address of record as it existed on October 20, 2004. A review of the record confirms applicants' assertion that the correspondence was returned to the USPTO. However, the USPS wrote on the correspondence that "the forwarding time had expired and to return to sender." The Office does not disagree with applicants that they did not receive the Notice of Allowance and Fee(s) Due or that the USPS returned it to the USPTO. However, the Office emphasizes that the reason that applicants did not receive the Notice of Allowance and Fee(s) Due was not due to any fault of the USPTO. Rather, applicants did not receive the Notice of Allowance due to their own inaction. Specifically, applicants failed to file a prompt and timely change of correspondence address with the USPTO. In fact, applicants did not file a change of correspondence address with the USPTO until March 7, 2005, over four months after the mailing of the Notice of Allowance and Fee(s) Due.

The belated notification of the change of correspondence address to the USPTO does not constitute proper notification as to establish unavoidable delay. Applicants are responsible for promptly notifying the Office of any change of address. The Office further notes that where an application becomes abandoned as a consequence of a change of correspondence address, an adequate showing of "unavoidable" delay requires a showing that applicants exercised due care to promptly notify the Office of the change of address and file a timely notification of the change of address in the application.[5] Furthermore, a delay resulting from the lack of knowledge or improper application of the patent statute, rules of practice or the MPEP does not constitute an "unavoidable" delay.[6]

Again, applicants did not provide a showing that they exercised due care to promptly notify the USPTO of the change of correspondence address or file a timely notice of the change of address in the application. Moreover, applicants have not presented any new arguments in the present renewed petition to support their assertion of unavoidable delay.

Because applicants did not provide a sufficient showing that the delay was unavoidable within the meaning of 35 USC § 151 and 37 CFR 1.137(a), the petition is **dismissed**.

Alternative Venue:

Applicants are strongly encouraged to consider filing a petition under 37 CFR 1.137(b) to revive an unintentionally abandoned application instead of filing a renewed petition under 37 CFR 1.137(a).

---

[5] MPEP 711.03(c)(III)(C)(2)

[6] See Haines v. Quigg, 673 F. Supp. 314, 317, 5 USPQ2d 1130, 1132 (N.D. Ind. 1987), Vincent v. Mossinghoff, 230 USPQ 621, 624 (D.D.C. 1985); Smith v. Diamond, 209 USPQ 1091 (D.D.C. 1981); Potter v. Dann, 201 USPQ 574 (D.D.C. 1978); Ex parte Murray, 1891 Dec. Comm'r Pat. 130, 131 (1891).

A grantable petition pursuant to 37 CFR 1.137(b) must be accompanied by:

> (1) The reply required to the outstanding Office action or notice, unless previously filed. In nonprovisional application abandoned for failure to prosecute, the required reply may be met by the filing of a continuing application. In a nonprovisional utility or plant application filed on or after June 8, 1995, and abandoned for failure to prosecute, the required reply may also be met by the filing of a request for continued examination in compliance with § 114. In an application or patent, abandoned or lapsed for failure to pay the issue fee or any portion thereof, the required reply must include payment of the issue fee or any outstanding balance. In an application, abandoned for failure to pay the publication fee, the required reply must include payment of the publication fee.
>
> (2) The petition fee as set forth in 37 CFR 1.17(m), **an additional** $1,500.00 for a large entity and $750.00 for a small entity;
>
> (3) A statement that the entire delay in filing the required reply from the due date for the reply until the filing of a grantable petition pursuant to this paragraph was unintentional. The Director may require additional information where there is a question whether the delay was unintentional; and
>
> (4) Any terminal disclaimer (and fee set forth in § 1.20(d)) required pursuant to paragraph (d) of this section.

A form for filing a petition to revive an unintentionally abandoned application accompanies this decision for applicants' convenience.

Further correspondence with respect to this matter should be addressed as follows and **to the attention of Senior Petitions Attorney Christina Tartera Donnell:**

By mail: Mail Stop Petition
Commissioner for Patents
P.O. Box 1450
Alexandria, VA 22313-1450

By FAX: (703) 872-9306
Attn: Office of Petitions

By hand: Customer Service Window
Randolph Building
401 Dulany Street
Alexandria, VA 22314

The Office finance records indicate that applicants authorized the USPTO to charge a $250.00 fee for the filing of the present renewed petition under 37 CFR 1.137(a). The petition fee is unnecessary. Therefore, the Office will refund the $250.00 to counsel's Deposit Account.

Telephone inquiries related to this decision may be directed to the undersigned at (571) 272-3211.

Christina Tartera Donnell

Christina Tartera Donnell
Senior Petitions Attorney
Office of Petitions

Enclosures: Petition For Revival Of An Application For Patent Abandoned Unintentionally Under 37 CFR 1.137(b) – Form PTO/SB/64 and Privacy Act Statement

UNITED STATES PATENT AND TRADEMARK OFFICE

Commissioner for Patents
United States Patent and Trademark Office
P.O. Box 1450
Alexandria, VA 22313-1450
www.uspto.gov

FISH & RICHARDSON, PC
P.O. BOX 1022
MINNEAPOLIS MN 55440-1022

COPY MAILED

AUG 16 2006

OFFICE OF PETITIONS

In re Patent No. 6,955,898
Issued: October 18, 2005
Application No. 10/125,332
Filed: April 17, 2002
Attorney Docket No. 0666-019002/USC2752

DECISION ON PETITION

This is a decision on the petition under 37 CFR 1.137(b), filed October 25, 2005, to revive the above-identified application.

On October 20, 2004, the Office mailed a Notice of Allowance and Fee(s) Due, which set a three-month statutory period to respond. The above-identified application became abandoned on January21, 2005, for failure to timely pay the issue fee and the publication fee. On March 17, 2005, petitioner filed a petition under 37 CFR 1.137(a), to revive the above-identified application, which was dismissed by the decision of May 18, 2005. On July 18, 2005, petitioner filed a renewed petition under 37 CFR 1.137(a), which was dismissed by the decision of September 8, 2005. Although the application remained abandoned, the application issued as Patent No. 6,955,898, on October 18, 2005. Thereafter, on October 25, 2005, petitioner filed the present petition under 37 CFR 1.137(b) with the petition fee.

37 CFR 1.137(b)(3) requires a statement that "the entire delay in filing the required reply from the due date for the reply until the filing of a grantable petition pursuant to this paragraph was unintentional" be submitted. The statement presented will be accepted and construed as the statement required by 37 CFR 1.137(b)(3). Petitioner must notify the Office if this is not a correct interpretation of the statement contained in the present petition.

Petitioner has met the requirements of 37 CFR 1.137(b) to revive this application. Accordingly, the petition under 37 CFR 1.137(b) is **granted.** **This decision is intended to close the gap in prosecution.**

Telephone inquiries related to this decision may be directed to the undersigned at (571) 272-3211.

Christina Tartera Donnell

Christina Tartera Donnell
Senior Petitions Attorney
Office of Petitions

UNITED STATES PATENT AND TRADEMARK OFFICE

COMMISSIONER FOR PATENTS
UNITED STATES PATENT AND TRADEMARK OFFICE
P.O. BOX 1450
ALEXANDRIA, VA 22313-1450
www.uspto.gov

Paper No.

SUGHRUE MION, PLLC
2100 PENNSYLVANIA AVENUE, N.W.
SUITE 800
WASHINGTON DC 20037

COPY MAILED

JAN 25 2007

OFFICE OF PETITIONS

In re Patent No. 7,114,132	:	DECISION ON REQUEST
Takahiro Yaguchi	:	FOR RECONSIDERATION OF
Application No. 10/125,350	:	PATENT TERM ADJUSTMENT
Filed: April 19, 2002	:	
Atty Docket No. Q69691	:	
	:	

This is a decision on the "REQUEST FOR RECONSIDERATION OF PATENT TERM ADJUSTMENT UNDER 37 C.F.R. § 1.705(d)" filed November 22, 2006. Patentee requests that the patent term adjustment indicated in the patent be corrected from four hundred seventy (470) to read at least five hundred forty-four (544) days.

The request for reconsideration of the patent term adjustment indicated in the patent is **DISMISSED**.

Patentee is given TWO (2) MONTHS to respond to this decision. No extensions of time will be granted under § 1.136.

On September 26, 2006, the above-identified application matured into U.S. Patent No. 7,114,132. The instant request for reconsideration filed November 22, 2006 was timely filed within 2 months of the date the patent issued. See §1.705(d). The Patent issued with a revised Patent Term Adjustment of 470 days. Patentee disputes the reduction of 120 days associated with the filing of a request for refund after the mailing of the Notice of Allowance.

Patentee's arguments and evidence have been considered, but not found persuasive. By Official Gazette Notice dated June 26, 2001 and as restated in MPEP 2732, the Director has advised applicants and patentees that the filing after the mailing of a

Notice of Allowance papers that will be considered a failure to engage in reasonable efforts to conclude processing or examination of an application include: (1) a request for a refund. 37 CFR 1.704(c)(10) provides that in such a case the period of adjustment set forth in 37 CFR 1.703 shall be reduced by the lesser of:

> (1) the number of days, if any, beginning on the date the amendment under 37 CFR 1.312 was filed and ending on the mailing date of the Office action or notice in response to the amendment under 37 CFR 1.312 or such other paper;
>
> or
>
> (2) four months.

It is undisputed that the paper filed February 28, 2006 is of the type identified by the Director to be considered a failure to engage within the meaning of § 1.704(c)(10). A review of the record confirms that after the mailing of the Notice of Allowance on January 23, 2006, on February 28, 2006 applicant filed a request for refund of a fee paid on December 5, 2005. By definition, applicant's waiting until after the mailing of the notice of allowance to request a refund constitutes a failure to engage. Accordingly, the reduction of 120 days is warranted and will not be removed.

The patent term adjustment indicated on the patent of 470 days is correct.

The $200.00 fee set forth in 37 CFR 1.18(e) has been charged to Deposit Account No. 19-4880, as authorized. No additional fees are required.

Telephone inquiries specific to this matter should be directed to the undersigned at (571) 272-3219.

Nancy Johnson

Nancy Johnson
Senior Petitions Attorney
Office of Petitions

UNITED STATES PATENT AND TRADEMARK OFFICE

COMMISSIONER FOR PATENTS
UNITED STATES PATENT AND TRADEMARK OFFICE
P.O. BOX 1450
ALEXANDRIA, VA 22313-1450
www.uspto.gov

Paper No.

SUGHRUE MION, PLLC
2100 PENNSYLVANIA AVENUE, N.W.
SUITE 800
WASHINGTON DC 20037

COPY MAILED

NOV 0 5 2007

OFFICE OF PETITIONS

In re Patent No. 7,114,132	:	DECISION ON REQUEST
Takahiro Yaguchi	:	FOR RECONSIDERATION OF
Application No. 10/125,350	:	DECISION
Filed: April 19, 2002	:	and
Atty Docket No. Q69691	:	NOTICE OF INTENT TO ISSUE
	:	CERTIFICATE OF CORRECTION

This is a decision on the "REQUEST FOR RECONSIDERATION OF PATENT TERM ADJUSTMENT DECISION UNDER 37 C.F.R. § 1.181(f)" filed March 26, 2007. Patentee requests that the patent term adjustment indicated in the Issue Notification (and on the patent) should not have been reduced to 470 days, but instead, should have been reduced to at most 568 days.

The request for reconsideration of the patent term adjustment indicated in the patent is **GRANTED to the extent indicated herein**.

The patent term adjustment indicated in the patent is to be corrected by issuance of a certificate of correction showing a revised Patent Term Adjustment of FIVE HUNDRED SIXTY-SEVEN (567) days.

Patentee is given TWO (2) MONTHS to respond to this decision. No extensions of time will be granted under § 1.136.

On September 26, 2006, the above-identified application matured into U.S. Patent No. 7,114,132. By decision mailed January 25, 2007, a request for reconsideration of patent term adjustment timely filed November 22, 2006 was dismissed. In response, patentee timely filed the instant request for reconsideration.

Patentee continues to dispute the reduction of 120 days associated with the filing of a request for refund after the mailing of the Notice of Allowance. Patentee maintains that at most the reduction associated with the filing of a request for refund on February 28, 2006 should have been 22 days, not 120 days. Patentee calculates this period of reduction based on the Office depositing the refund in the Applicant's deposit account on March 22, 2006.

In this instance, patentee's argument is persuasive with respect to the period of reduction of 120 days being incorrect. However, as previously stated the period of reduction is the lesser of:

> (1) the number of days, if any, beginning on the date the amendment under 37 CFR 1.312 was filed and ending on the mailing date of the Office action or notice in response to the amendment under 37 CFR 1.312 or such other paper;
>
> or
>
> (2) four months.

In this instance, the number of days is 23 days, not 22 days, counting the number of days beginning on February 28, 2006, the date the request for refund was filed, and ending on March 22, 2006. As stated in MPEP 2731, when a period is indicated (in 37 CFR 1.703 or 1.704) as "beginning" on a particular day, that day is included in the period, in that such day is "day one" of the period and not "day zero." For example, a period beginning on April 1 and ending on April 10 is ten (and not nine) days in length. Accordingly, the instant period is 23 days, not 22 days.

In view thereof, the patent should have issued with a revised patent term adjustment of FIVE HUNDRED SIXTY-SEVEN (567) days.

The application file is being forwarded to the Certificates of Correction Branch for issuance of a certificate of correction in order to rectify this error. The Office will issue a certificate of correction indicating that the term of the above-identified patent is extended or adjusted by five hundred sixty-seven **(567)** days.

Telephone inquiries specific to this matter should be directed to the undersigned at (571) 272-3219.

Nancy Johnson
Senior Petitions Attorney
Office of Petitions

Enclosure: Copy of DRAFT Certificate of Correction

UNITED STATES PATENT AND TRADEMARK OFFICE

CERTIFICATE OF CORRECTION

PATENT : 7,114,132 B2

DATED : September 26, 2006

INVENTOR(S) : Yaguchi

DRAFT

It is certified that error appears in the above-identified patent and that said Letters Patent is hereby corrected as shown below:

On the cover page,

[*] Notice: Subject to any disclaimer, the term of this patent is extended or adjusted under 35 USC 154(b) by (470) days

Delete the phrase "by 470" and insert – by 567 days--

UNITED STATES PATENT AND TRADEMARK OFFICE

Commissioner for Patents
United States Patent and Trademark Office
P.O. Box 1450
Alexandria, VA22313-1450
www.uspto.gov

WILLIAM O'DRISCOLL - 12-1
THE TRANE COMPANY
3600 PAMMEL CREEK ROAD
LA CROSSE WI 54601

COPY MAILED

FEB 28 2008

OFFICE OF PETITIONS

In re Application of :
Robert E. Krocker et al. :
Application No. 10/125,364 : ON PETITION
Filed: April 16, 2002 :
Attorney Docket No. D-2496/WOD :

This is a decision on the petition under 37 CFR 1.137(b)[1], filed October 29, 2007, to revive the above-identified application.

The petition is **GRANTED**.

This application became abandoned on July 6, 2007, for failure to timely file a reply to the Final Office action mailed April 5, 2007, which set a three (3) month shortened statutory period for reply. No extensions of time under 37 CFR 1.136(a) were obtained. Accordingly, a Notice of Abandonment was mailed November 2, 2007.

The petition satisfies the requirements of 37 CFR 1.137(b) in that petitioner has supplied (1) the reply in the form of an amendment; (2) the petition fee of $1540.00; and (3) an adequate statement of unintentional delay.

---

[1]Effective December 1, 1997, the provisions of 37 CFR 1.137(b) now provide that where the delay in reply was unintentional, a petition may be filed to revive an abandoned application or a lapsed patent pursuant to 37 CFR 1.137(b). A grantable petition filed under the provisions of 37 CFR 1.137(b) must be accompanied by:

(1) the required reply, unless previously filed. In a nonprovisional application abandoned for failure to prosecute, the required reply may be met by the filing of a continuing application. In an application or patent, abandoned or lapsed for failure to pay the issue fee or any portion thereof, the required reply must be the payment of the issue fee or any outstanding balance thereof.

(2) the petition fee as set forth in 37 CFR 1.17(m);

(3) a statement that the entire delay in filing the required reply from the due date for the reply until the filing of a grantable petition pursuant to 37 CFR 1.137(b) was unintentional. The Commissioner may required additional information where there is a question whether the delay was unintentional; and

(4) any terminal disclaimer (and fee as set forth in 37 CFR 1.20(d)) required pursuant to 37 CFR 1.137(c)).

Additionally, the record reveals that a three month extension of time was also filed with the instant petition, however, pursuant to 37 CFR 1.136, an extension of time must be filed prior to the expiration of the maximum period obtainable for reply to avoid abandonment. Accordingly, since the $1050.00 extension of time fee submitted with the petition on October 29, 2007, was subsequent to the maximum period obtainable for reply, this fee is unnecessary and will be credited to counsel's deposit account no. 20-1434.

The Examiner has determined that the amendment filed with the present petition is acceptable. The matter therefore is being referred to Technology Center 2121.

Telephone inquiries concerning this matter may be directed to the undersigned Petitions Attorney at (571) 272-3212.

Patricia Faison-Ball

Patricia Faison-Ball
Senior Petitions Attorney
Office of Petitions

UNITED STATES PATENT AND TRADEMARK OFFICE

COMMISSIONER FOR PATENTS
UNITED STATES PATENT AND TRADEMARK OFFICE
WASHINGTON, D.C. 20231
www.uspto.gov

Paper No. 5

OBLON SPIVAK MCCLELLAND MAIER & NEUSTADT PC
FOURTH FLOOR
1755 JEFFERSON DAVIS HIGHWAY
ARLINGTON, VA 22202

COPY MAILED

OCT 0 2 2002

OFFICE OF PETITIONS

In re Application of	:	
Kashihara	:	
Application No. 10/125,382	:	DECISION GRANTING
Filed: April 19, 2002	:	PETITION
Attorney Docket No. 222293US2S	:	

This is a decision on the petition filed July 29, 2002, to establish that Figure 19 was part of the originally filed application.

On April 19, 2002, the application was filed.

On May 28, 2002, the Office of Initial Patent Examination mailed a Notice stating that the application had been accorded a filing date of April 19, 2002, and advising applicants that Figure 19 described in the specification appeared to have been omitted.

In response, the present petition was filed alleging that Figure 19 was deposited on April 19, 2002. In support, petitioner has submitted a postcard receipt which acknowledges receipt of "Formal Drawings 19 Sheets" on April 19, 2002.[1] Petitioner has also submitted a copy of the missing documentation- Figure 19.

Upon review of the record, Figure 19, deposited on April 19, 2002, has not been located. However, the evidence is convincing that the application papers deposited on April 19, 2002, included Figure 19, and that Figure 19 was subsequently misplaced in the PTO.

In view of the above, the petition is **granted**. The copy of Figure 19 submitted with the petition will be used for examination purposes.

No petition fee is required and none has been charged.

The Notice mailed May 28, 2002, is hereby vacated to the extent the Notice stated Figure 19 was missing.

The Application is being returned to the Office of Initial Patent Examination for further processing with a filing date of April 19, 2002, using the application papers filed on April 19, 2002, and the copy of Figure 19 filed on July 29, 2002.

---

[1] Evidence of receipt of any correspondence filed in the Patent and Trademark Office can be obtained by submitting a self addressed post card properly itemizing and identifying the paper or papers being filed. Upon receipt of the correspondence, the Patent and Trademark Office will check the listing on the post card against the papers submitted, making sure that all items listed are present and will then stamp the postcard with an Official date stamp and place the post card in the outgoing mail. "A post card receipt which itemizes and properly identifies the papers which are being filed serves as *prima facie* evidence of receipt in the PTO of all items listed thereon by the PTO." M.P.E.P. § 503.

Telephone inquiries should be directed to Petitions Attorney Steven Brantley at (703) 306-5683.

Charles Steven Brantley
Petitions Attorney
Office of Petitions
Office of the Deputy Commissioner
for Patent Examination Policy

UNITED STATES PATENT AND TRADEMARK OFFICE

Commissioner for Patents
United States Patent and Trademark Office
P.O. Box 1450
Alexandria, VA 22313-1450
www.uspto.gov

JASON M. OKUN
FITZPATRICK CELLA HARPER & CINTO
30 ROCKEFELLER PLAZA
NEW YORK NY 10112

COPY MAILED
SEP 25 2006
OFFICE OF PETITIONS

In re Patent No. 6,903,353	:	
Applicant MURAKI, et al	:	DECISION ON REQUEST
Application No. 10/125,439	:	FOR RECONSIDERATION OF
Filed: April 19, 2002	:	PATENT TERM ADJUSTMENT
Atty Docket No. 00862.022583	:	
	:	

This letter is in response to the "COMMENTS ON DETERMINATION OF PATENT TERM ADJUSTMENT," filed June 30, 2005. Patentee requests confirmation of the issuance of a patent term adjustment of sixty-five (65) days.

The request for review of the determination of patent term adjustment (PTA) is **dismissed**.

Patentees are given **TWO (2) MONTHS** from the mail date of this decision to respond. No extensions of time will be granted under § 1.136.

On June 30, 2005, patentees submitted the instant comment. On June 7, 2005, the above-identified application matured into U.S. Patent No. 6,903,353, with a revised patent term adjustment of 65 days.

Patentees stated no basis for the request for review of the patent term adjustment and has failed to submit the $200 fee set forth in 37 CFR 1.18(e) as required for the request for patent term adjustment pursuant to 37 CFR 1.705(d) which requires compliance with paragraph (b)(1) and (b)(2) of this section. Accordingly, the request for review is dismissed.

Alternatively, pursuant to patentee's duty of good faith and candor to the Office and in order to comply with this duty,

where the correct adjustment is thought to be less than indicated by the Office, an application for term adjustment under §1.705 need not be filed. Instead, a candor letter could be filed indicating that the term adjustment is thought to be longer than appropriate. Any adjustment of patent term greater than indicated by the Office still requires the fee set forth in 37 CFR 1.18(e).

Further correspondence with respect to this matter should be addressed as follows:

By mail: Mail Stop PETITIONS
Commissioner for Patents
Post Office Box 1450
Alexandria, VA 22313-1450

By hand: Customer Service Window
Mail Stop Petitions
Randolph Building
401 Dulany Street
Alexandria, VA 22314

By fax: (571) 273-8300
ATTN: Office of Petitions

Telephone inquiries specific to this matter should be directed to Amelia Au, at (571) 272-7414.

Nancy Johnson
Senior Petitions Attorney
Office of Petitions

UNITED STATES PATENT AND TRADEMARK OFFICE

COMMISSIONER FOR PATENTS
UNITED STATES PATENT AND TRADEMARK OFFICE
WASHINGTON, DC 20231
www.uspto.gov

Paper No. 45

MAIL

APR 3 2003

DIRECTOR OFFICE
TECHNOLOGY CENTER 2600

JOHN W. RYAN
WILMER, CUTLER & PICKERING
2445 M. STREET, N.W.
WASHINGTON DC 20037-1420

In re Application of :
Leacock et al. :
Application No. 10/125,440 :
Filed: April 19, 2002 :
For: SYSTEM FOR RATING CONSTRUCTED RESPONSES BASED ON CONCEPTS AND A MODEL ANSWER :

DECISION ON REQUEST TO WITHDRAW AS ATTORNEY

This is a decision on the request to withdraw as attorney/agent of record filed on March 11, 2003.

A grantable request to withdraw as attorney/agent of record must:
(1) indicate the present mailing address of the attorney(s)/agent(s) who seek(s) to withdraw, and
(2) be signed by each attorney/agent seeking to withdraw or clearly be signed on their behalf, and
(3) be *approved* at least thirty (30) days prior to the maximum extendable period for response to any outstanding Office Action, and
(4) indicate the address to which future correspondence should be mailed.

Petitioner has met all of the above. Accordingly, the request is **GRANTED**.

All of the attorneys of record are granted the request for withdraw of attorney/agent. The U.S. Patent Office does not recognize withdrawal of a firm.

All future communications from the Office will be directed to the address listed below until otherwise notified by applicant. Applicant is reminded of the obligation to promptly notify the Patent and Trademark Office of any change in correspondence address to ensure receipt of all communications from the Office.

Kenneth A. Wieder

Kenneth Wieder
Special Program Examiner
Technology Center 2600
Communications
(703) 305-4710

cc: Sheree Johnson-Gregory
Educational Testing Service
Rosedale Road
Mailstop 38D
Princeton, New Jersey 08541

UNITED STATES PATENT AND TRADEMARK OFFICE

COMMISSIONER FOR PATENTS
UNITED STATES PATENT AND TRADEMARK OFFICE
P.O. BOX 1450
ALEXANDRIA, VA 22313-1450
www.uspto.gov

HUMAN GENOME SCIENCES INC
9410 KEY WEST AVENUE
ROCKVILLE MD 20850

COPY MAILED

OCT 2 2 2003

OFFICE OF PETITIONS

Applicant: Rosen et al.
Appl. No.: 10/125,451
Filing Date: April 19, 2002
Title: HUMAN CHEMOKINE BETA-10 MUTANT POLYPEPTIDES NUCLEIC ACIDS, PROTEINS, AND ANTIBODIES
Attorney Docket No.: PF504D1
Pub. No.: US 2003/0022314 A1
Pub. Date: January 30, 2003

This is a decision on the request for corrected patent application publication under 37 CFR 1.221(b), filed on March 31, 2003, for the above-identified application.

The request is DISMISSED.

Applicant requests that the application be republished because the patent application publication omits some of the continuity data. Applicant argues that the mistake is material because the missing priority data affects the use of the published application as prior art under 35 U.S.C. § 102(e), as a member of the public would be unable to determine the correct effective date of the publication as a reference.

37 CFR 1.221(b) is applicable "only when the Office makes a material mistake which is apparent from Office records." A material mistake must affect the public's ability to appreciate the technical disclosure of the patent application publication, to determine the scope of the patent application publication, or to determine the scope of the provisional rights that an applicant may seek to enforce upon issuance of a patent.[1] The instant request does not identify a material mistake in the publication made by the Office:

The error in the continuity claim is an Office mistake, but it is not a material mistake as required by 37 CFR 1.221(b). The improper priority claim is not a material mistake because it does not affect the public's ability to appreciate the technical disclosure of the patent application publication, to determine the scope of the patent application publication or to determine the scope of the provisional rights that an applicant may seek to enforce upon issuance of a patent. The specification and claims were accurately published, thus one can read and understand the content of the application. The error also does not affect the use of the patent application publication as a prior art reference, because the earliest priority date is correctly published. While some of the related continuity data is missing, anyone looking to determine the effective date of the publication as a reference would have to order the application files and would be reviewing

[1] Changes to Implement Eighteen-Month Publication of Patent Applications, 65 FR 57023, 57038 (Sept. 20, 2000), 1239 Off. Gaz. Pat. Office Notices 63, 75 (Oct. 10, 2000) (final rule).

PALM.

The applicant is advised that a "request for republication of an application previously published" may be filed under 37 CFR 1.221(a). Such a request for republication "must include a copy of the application in compliance with the Office's electronic filing system requirements and be accompanied by the publication fee set forth in § 1.18(d) and the processing fee set forth in § 1.17(i)." If the request for republication does not comply with the electronic filing system requirements, the republication will not take place and the publication fee set forth in § 1.18(d) will be refunded. The processing fee will be retained.

Any request for republication under 37 CFR 1.221(b), should be submitted via the EFS system and questions or request for reconsideration of this decision, should be addressed as follows:

By mail to: Mail Stop PGPUB
Commissioner for Patents
P.O. Box 1450
Alexandria, VA 22313-1450

By facsimile: 703-305-8568

The application is being forwarded to the Files Repository.

Inquiries relating to this matter may be directed to Mark Polutta at (703) 308-8122 (voice) or (703) 746-3465 (facsimile).

Mark Polutta
Legal Advisor
Office of Patent Legal Administration
Office of the Deputy Commissioner
for Patent Examination Policy

UNITED STATES PATENT AND TRADEMARK OFFICE

Commissioner for Patents
United States Patent and Trademark Office
P.O. Box 1450
Alexandria, VA 22313-1450
www.uspto.gov

MAY 16 2006

COOLEY GODWARD LLP
THE BOWEN BUILDING
ATTN: THE PATENT GROUP
875 15TH STREET, N.W., SUITE 800
WASHINGTON DC 20005-2221

In re Application of	:
Stephen P. A. Fodor et al	:
Serial No.: 10/125,460	: PETITION DECISION
Filed: April 19, 2002	:
Attorney Docket No.: 056297-5003-18	:

This is a response to the petitions under 37 CFR 1.59(b), filed December 12, 2005, to expunge information from the above identified application.

Petitioner requests that one page from each of two affidavits submitted November 16, 2005, be expunged from the record. The petition fee set forth in 37 CFR 1.17(h) has been paid.

A review of the file shows that applicants filed affidavits under 37 CFR 1.131 and 37 CFR 1.132 on November 16, 2005. Each affidavit contained several exhibits as a part of the affidavit. Part of the exhibits is single page, referred to as exhibit C or B depending on the affidavit, which purportedly contains proprietary or confidential information. However, none of the attachments to the affidavit are labeled with exhibit letters or numbers, thus making it difficult to identify the correct page to be expunged. Further, since the affidavits have been converted to scanned images in the Image File Wrapper system and are coded as single documents, the removal of a single page from among the pages of a document is difficult. It is recommended that applicants resubmit the affidavits with the proper material redacted and a renewed petition (no additional fee required) to expunge the original affidavits.

The petition is **DISMISSED** for the reasons set forth above.

Should there be any questions with respect to this decision, please contact William R. Dixon, Jr., by mail addressed to: Director, Technology Center 1600, P.O. Box 1450, Alexandria, VA 22313-1450, or by telephone at 571-272-0519 or by facsimile transmission at general Office facsimile number, 703-872-9306.

George C. Elliott

George C. Elliott
Director, Technology Center 1600

UNITED STATES PATENT AND TRADEMARK OFFICE

Commissioner for Patents
United States Patent and Trademark Office
P.O. Box 1450
Alexandria, VA 22313-1450
www.uspto.gov

AUG - 9 2006

COOLEY GODWARD LLP
THE BOWEN BUILDING
ATTN: THE PATENT GROUP
875 15TH STREET, N.W., SUITE 800
WASHINGTON DC 20005-2221

In re Application of	:
Stephen P. A. Fodor et al	:
Serial No.: 10/125,460	: PETITION DECISION
Filed: April 19, 2002	:
Attorney Docket No.: AFFY-003/23US	:

This is a response to the renewed petition under 37 CFR 1.59(b), filed June 2, 2005, to expunge information from the above identified application.

Petitioner requests that affidavits containing unredacted material be expunged from the record. Petitioner states either: (A) that the information contains trade secret material, proprietary material and/or material that is subject to a protective order which has not been made public; or (B) that the information submitted was unintentionally submitted and the failure to obtain its return would cause irreparable harm to the party who submitted the information or to the party in interest on whose behalf the information was submitted, and the information has not otherwise been made public. The petition fee set forth in 37 CFR 1.17(h) has been paid.

Applicants filed a reply to an Office action and included with the reply affidavits under 37 CFR 1.131. The affidavits were proper and considered by the examiner. Applicants, however, discovered that some confidential material in exhibits attached to the affidavits should have been redacted and was not. The previous petition decision suggested resubmitting complete copies of the affidavits with a request to expunge the original affidavits as it was difficult to expunge a single page from among many pages. Applicants have now complied with that suggestion and the original affidavits have been closed to public access in the IFW file and will not be further considered by the examiner.

The petition is **GRANTED.**

Should there be any questions about this decision please contact William R. Dixon, Jr., by letter addressed to Director, TC 1600, at the address listed above, or by telephone at 571-272-0519 or by facsimile sent to the general Office facsimile number 571-273-8300.

George C. Elliott

George C. Elliott
Director, Technology Center 1600

SPE RESPONSE FOR CERTIFICATE OF CORRECTION

Paper No.: _____

DATE : 10/3/06

TO SPE OF : ART UNIT 1775

SUBJECT : Request for Certificate of Correction for Appl. No.: 10/125480 Patent No.: 7097917

Please respond to this request for a certificate of correction within 7 days.

Please review the requested changes/corrections as shown in the COCIN document(s) in the IFW application image. No new matter should be introduced, nor should the scope or meaning of the claims be changed.

Please complete the response (see below) and forward the completed response to scanning using document code COCX.

HENRY RANDALL
Certificates of Correction Branch
703-308-9390 ext.

Thank You For Your Assistance

The request for issuing the above-identified correction(s) is hereby:

Note your decision on the appropriate box.

- ☒ **Approved** — All changes apply.
- ☐ **Approved in Part** — Specify below which changes **do not** apply.
- ☐ **Denied** — State the reasons for denial below.

Comments: _____

RENA DYE
SUPERVISORY PATENT EXAMINER

SPE

1794
Art Unit

UNITED STATES PATENT AND TRADEMARK OFFICE

Commissioner for Patents
United States Patent and Trademark Office
P.O. Box 1450
Alexandria, VA 22313-1450
www.uspto.gov

#16

Penrose Lucas Albright, Esq.
MASON, MASON & ALBRIGHT
P.O. Box 2246
Arlington, VA 22202-0246

COPY MAILED

AUG 2 2 2006

OFFICE OF PETITIONS

In re Application of
Alexander Van Der Lely et al. :
Application No. 10/125,502 : Decision on Petition
Filing Date: April 19, 2002 :
Attorney Docket No. 8553/257 :

This is a decision on the petition under 37 CFR 1.137(b), filed December 27, 2005, to revive the above-identified application.

The petition is **granted**.

The above-identified application became abandoned as a result of petitioner's failure to file an appeal brief (and fee required by 37 CFR 1.17(c)) within the time period provided in 37 CFR 1.192(a). As an appeal brief (and appeal brief fee) was not filed within two (2) months of the Notice of Appeal filed October 28, 2003, and no extensions of time under the provisions of 37 CFR 1.136(a) were obtained, the appeal was dismissed and the proceedings as to the rejected claims were terminated. See 37 CFR 1.192(b) & 1.197(c). As no claim was allowed, the-above-identified application became abandoned on December 29, 2003. See MPEP 1215.04.

The instant petition requests revival of the application.

Petitioner has met the requirements to revive the above-identified application pursuant to 37 CFR 1.137(b). Therefore, the petition is granted and the application is revived.

Technology Center Art Unit 3643 will be informed of the instant decision and the RCE and other papers filed December 27, 2005, will be entered and considered by the examiner in due course.

Telephone inquiries regarding this communication should be directed to Petitions Attorney Shirene Brantley at (571) 272-3230.

Shirene Willis Brantley

Shirene Willis Brantley
Senior Petitions Attorney
Office of Petitions

UNITED STATES PATENT AND TRADEMARK OFFICE

Commissioner for Patents
United States Patent and Trademark Office
P.O. Box 1450
Alexandria, VA 22313-1450
www.uspto.gov

HOWREY LLP
C/O IP DOCKETING DEPARTMENT
2941 FAIRVIEW PARK DR, SUITE 200
FALLS CHURCH VA 22042-2924

COPY MAILED

JUN 2 3 2008

OFFICE OF PETITIONS

In re Application of :
van der Lely, et al. :
Application No. 10/125,502 :
Filed: April 19, 2002 :
Attorney Docket No. 04132.0107.00US00 :
For: DEVICE FOR SUPPLYING FEED TO ANIMALS

ON PETITION

This is a decision on the petition under 37 CFR 1.137(b), filed February 29, 2008, to revive the above-identified application.

This application became abandoned for failure to timely respond to the final Office action mailed June 18, 2007, which set an extendable three month period for reply. Accordingly, this application became abandoned on September 19, 2007. A Notice of Abandonment was mailed on January 17, 2008.

Applicants have submitted a RCE and required fee and amendment in reply to the June 18, 2007 final Office action, an acceptable statement of the unintentional nature of the delay in responding to the June 18, 2007 final Office action, and the petition fee.

The petition is **GRANTED**.

After the mailing of this decision the application will be forwarded to Technology Center AU 3643 for consideration of the RCE and amendment filed on February 29, 2008.

Telephone inquiries pertaining to this decision may be directed to the undersigned at (571) 272-3230.

Shirene Willis Brantley

Shirene Willis Brantley
Senior Petitions Attorney
Office of Petitions

UNITED STATES PATENT AND TRADEMARK OFFICE

Commissioner for Patents
United States Patent and Trademark Office
P.O. Box 1450
Alexandria, VA 22313-1450
www.uspto.gov

HOWREY LLP - East
C/O IP DOCKETING DEPARTMENT
2941 FAIRVIEW PARK DR, SUITE 200
FALLS CHURCH VA 22042-2924

COPY MAILED

SEP 28 2009

OFFICE OF PETITIONS

In re Application of
Cornelis VAN DER LELY et al.
Application No. 10/125,502
Filed: April 19, 2002
Attorney Docket No. 04132.0107.00US00

NOTICE UNDER 37 CFR. 1.28(c)

This is a notice regarding your request for acceptance of a fee deficiency submission under 37 CFR 1.28. On September 01, 1998, the court of Appeals for the Federal Circuit held that 37 CFR 1.28(c) is the sole provision governing the time for correction of the erroneous payment of the issue fee as a small entity. **See DH Technology v. Synergystex International, Inc. 154 F.3d 1333, 47 USPQ2d 1865 (Fed. Cir. Sept. 1, 1998).**

The Office no longer investigates or rejects original or reissue applications under 37 CFR 1.56. **1098 Off. Gaz. Pat. Office 502 (January 3, 1989).** Therefore, nothing in this Notice is intended to imply that an investigation was done.

Your fee deficiency submission under 37 CFR 1.28 is hereby **ACCEPTED**.

This application is no longer entitled to small entity status. Accordingly, all future fees paid in this application must be paid at the large entity rate.

Inquiries related to this communication should be directed to the Michelle R. Eason at (571) 272-4231.

Thurman Page
Petitions Examiner
Office of Petitions

UNITED STATES PATENT AND TRADEMARK OFFICE

COMMISSIONER FOR PATENTS
UNITED STATES PATENT AND TRADEMARK OFFICE
P.O. BOX 1450
ALEXANDRIA, VA 22313-1450
www.uspto.gov

MORGAN LEWIS & BOCKIUS LLP
1111 PENNSYLVANIA AVENUE NW
WASHINGTON, DC 20004

COPY MAILED

JUN 01 2005

OFFICE OF PETITIONS

In re Application of
Moo Yeol Park, et al.
Application No. 10/125,520
Filed: April 19, 2002
Attorney Docket No. 041501-5506

ON PETITION

This is a decision on the petition under 37 CFR 1.313(c)(2), filed May 27, 2005 to withdraw the above-identified application from issue after payment of the issue fee.

It does not appear that the petition is signed by an attorney of record. However, in accordance with 37 CFR 1.34(a), the signature of Donald L. Monin, Jr. appearing on the correspondence shall constitute a representation to the United States Patent and Trademark Office that he is authorized to represent the particular party on whose behalf he acts. However, if Mr. Monin desires to receive correspondence regarding this file, the appropriate power of attorney documentation must be submitted. A courtesy copy of this decision is being mailed to Mr. Monin, the petitioner herein. However, until otherwise instructed, all future correspondence regarding this application file will be directed solely to the above-noted correspondence address of record.

The petition is **GRANTED**.

The above-identified application is withdrawn from issue for consideration of a submission under 37 CFR 1.114 (request for continued examination). See 37 CFR 1.313(c)(2).

Petitioner is advised that the issue fee paid on April 4, 2005 in the above-identified application cannot be refunded. If, however, the above-identified application is again allowed, petitioner may request that it be applied towards the issue fee required by the new Notice of Allowance. [1]

Telephone inquiries relating to this decision should be directed to the undersigned at (571) 272-3204.

[1] The request to apply the issue fee to the new Notice may be satisfied by completing and returning the new Issue Fee Transmittal Form PTOL-85(b), which includes the following language thereon: "Commissioner for Patents is requested to apply the Issue Fee and Publication Fee (if any) or re-apply any previously paid issue fee to the application identified above." Petitioner is advised that, whether a fee is indicated as being due or not, the Issue Fee Transmittal Form **must** be completed and timely submitted to avoid abandonment. Note the language in bold text on the first page of the Notice of Allowance and Fee(s) Due (PTOL-85).

The application is being referred to Technology Center AU 2871 for further processing of the request for continued examination under 37 CFR 1.114 filed May 27, 2005.

Sherry D. Brinkley
Petitions Examiner
Office of Petitions
Office of the Deputy Commissioner
for Patent Examination Policy

cc: Donald L.Monin, Jr.
Heller Ehrman LLP
1717 Rhode Island Avenue, N.W.
Washington, DC 20036

UNITED STATES PATENT AND TRADEMARK OFFICE

COMMISSIONER FOR PATENTS
UNITED STATES PATENT AND TRADEMARK OFFICE
P.O. BOX 1450
ALEXANDRIA, VA 22313-1450
www.uspto.gov

MORGAN LEWIS & BOCKIUS LLP
1111 PENNSYLVANIA AVENUE, N.W.
WASHINGTON, DC 20004

COPY MAILED
NOV 30 2004
OFFICE OF PETITIONS

In re Application of
Stephen P.A. Fodor, et al.
Application No. 10/125,530
Filed: April 19, 2002
Atty Docket No. 056297-5003-19

: DECISION ON PETITION
: UNDER 37 CFR 1.78(a)(3)

This is a decision on the petition under 37 CFR 1.78(a)(3), filed September 1, 2004, to accept an unintentionally delayed claim under 35 U.S.C. §120 for the benefit of the prior-filed nonprovisional application set forth in the concurrently filed amendment.

The petition is **GRANTED**.

A petition for acceptance of a claim for late priority under 37 CFR 1.78(a)(3) is only applicable to those applications filed on or after November 29, 2000. Further, the petition is appropriate only after the expiration of the period specified in 37 CFR 1.78(a)(2)(ii). In addition, the petition under 37 CFR 1.78(a)(3) must be accompanied by:

> **(1)** the reference required by 35 U.S.C. § 120 and 37 CFR 1.78(a)(2)(i) of the prior-filed application(s), unless previously submitted;[1]
> **(2)** the surcharge set forth in § 1.17(t); and
> **(3)** a statement that the entire delay between the date the claim was due under 37 CFR 1.78(a)(2)(ii) and the date the claim was filed was unintentional. The Commissioner may require additional information where there is a question whether the delay was unintentional.

The instant pending application was filed on April 19, 2002, and was pending at the time of filing of the instant petition. A reference to the prior-filed nonprovisional application has been

[1] Any nonprovisional application or international application designating the United States of America claiming the benefit of one or more prior-filed copending applications or international applications designating the United States of America must contain or be amended to contain a reference (amendment to the first line of the specification following the title or in an application data sheet (ADS) to each such prior-filed application, identifying it by application number (consisting of the series code and serial number) or international application number and international filing date filing date and indicating the relationship of the applications. Cross references to other related applications may be made when appropriate (*see* § 1.14).

included in an amendment to the first sentence of the specification following the title, as required by 37 CFR 1.78(a)(2)(iii).

The instant nonprovisional application was filed after November 29, 2000, and the claim herein for the benefit of priority to the prior-filed nonprovisional application is submitted after expiration of the period specified in 37 CFR 1.78(a)(2)(ii). Also, the reference to the prior-filed application was submitted during the pendency of the instant nonprovisional application. *See* 35 U.S.C. § 120. Accordingly, having found that the instant petition for acceptance of an unintentionally delayed claim for the benefit of priority under 35 U.S.C. § 120 to the prior-filed nonprovisional application satisfies the conditions of 37 CFR 1.78(a)(3), the petition is granted.

A corrected Filing Receipt, which includes the priority claim to the prior-filed nonprovisional application, accompanies this decision on petition.

The granting of the petition to accept the delayed benefit claim to the prior-filed application(s) under 37 CFR 1.78(a)(3) should not be construed as meaning that the instant application is entitled to the benefit of the prior-filed application(s). In order for the instant application to be entitled to the benefit of the prior-filed application(s), all other requirements under 35 U.S.C. § 120 and 37 CFR 1.78(a)(1) and (a)(2) must be met. Similarly, the fact that the corrected Filing Receipt accompanying this decision on petition includes the prior-filed application should not be construed as meaning that applicant is entitled to the claim for benefit of priority to the prior-filed application noted thereon. Accordingly, the examiner will, in due course, consider this benefit claim and determine whether the instant application is entitled to the benefit of the earlier filing date.

This application is being forwarded to Technology Center Art Unit 1634 for consideration by the Examiner of the amendment filed September 1, 2004, including applicant's claim under 35 U.S.C. § 120 and 37 CFR 1.78(a)(1) and (2) for the benefit of priority to the prior-filed nonprovisional application.

Telephone inquiries related to this decision should be directed to Sherry D. Brinkley at (571) 272-3204.

Sherry D. Brinkley
Sherry D. Brinkley
Petitions Examiner
Office of Petitions
Office of the Deputy Commissioner
for Patent Examination Policy

Karen O. Creasy
Karen O. Creasy
Petitions Examiner
Office of Petitions
Office of the Deputy Commissioner
for Patent Examination Policy

ATTACHMENT: Corrected Filing Receipt

UNITED STATES PATENT AND TRADEMARK OFFICE

Commissioner for Patents
United States Patent and Trademark Office
P.O. Box 1450
Alexandria, VA 22313-1450
www.uspto.gov

BIRCH STEWART KOLASCH & BIRCH
P.O BOX 747
FALLS CHURCH, VA 22040-0747

COPY MAILED

JAN 19 2006

OFFICE OF PETITIONS

ON PETITION

In re Patent No. 6,893,398	:	
Issue Date: May 17, 2005	:	
Application No. 10/125,546	:	
Filed: April 19, 2002	:	
Attorney Docket No. 2360-0365P	:	

This is a decision on the petition filed July 15, 2005, which is being treated as a petition under 37 CFR 3.81(b)[1] to correct the assignee on the front page of the above-identified patent by way of a Certificate of Correction.

The petition is granted.

Telephone inquiries concerning this matter may be directed to the undersigned at (571) 272-3208. Any questions concerning the issuance of the Certificate of Correction should be directed to the Certificates of Correction Branch at (703) 305-8309.

This matter is being forwarded to the Certificates of Correction Branch for issuance of the requested Certificate of Correction.

Karen Creasy

Karen Creasy
Petitions Examiner
Office of Petitions
Office of the Deputy Commissioner
for Patent Examination Policy

[1]See Official Gazette of June 22, 2004

#5

received 09/20/02

UNITED STATES PATENT AND TRADEMARK OFFICE

COMMISSIONER FOR PATENTS
UNITED STATES PATENT AND TRADEMARK OFFICE
WASHINGTON, D.C. 20231
www.uspto.gov

RECEIVED SEP 16 2002 By KMZR/KAB

Paper No. 5

COPY MAILED

SEP 12 2002

OFFICE OF PETITIONS

PATENT ADMINSTRATOR
KATTEN MUCHIN ZAVIS ROSENMAN
525 WEST MONROE STREET
SUITE 1600
CHICAGO, IL 60661-3693

In re Application of :
Nelson, et al. :
Application No. 10/125,577 : ON PETITION
Filed: April 19, 2002 :
Atty. Docket No.: 212722.00296 :

This is a decision on the petition under 37 CFR 1.182, filed July 8, 2002, to change the order of the names of the inventors.

The petition is **DISMISSED AS MOOT**.

Inventorship of a nonprovisional application is that which is set forth in the executed oath or declaration. See, 37 CFR 1.41(a).

The executed declaration submitted in connection with the above-referenced application fixes the order of inventorship as requested in the instant petition, thus making the instant petition unnecessary.

No fee is due in connection with this petition. Petitioner may request a refund of the previously submitted $130.00 petition fee. Requests for refunds should be directed to the Finance Office, Refund Section. A copy of this decision should accompany any such request.

This application is being forwarded to the Office of Initial Patent Examination for further processing.

Telephone inquiries concerning this matter may be directed to the undersigned at (703) 305-0310.

Alesia M. Brown
Petitions Attorney
Office of Petitions
Office of the Deputy Commissioner
for Patent Examination Policy

#11
12/12/02

UNITED STATES PATENT AND TRADEMARK OFFICE

COMMISSIONER FOR PATENTS
UNITED STATES PATENT AND TRADEMARK OFFICE
WASHINGTON, DC 20231
www.uspto.gov

Paper No. 11

MAIL

DEC 12 2002

DIRECTOR OFFICE
TECHNOLOGY CENTER 2600

PATENT ADMINSTRATOR
KATTEN MUCHIN ZAVIS ROSENMAN
525 WEST MONROE STREET
SUITE 1600
CHICAGO IL 60661-3693

In re Application of:
Venugopal Srinivasan et al
Application No. 10/125,577
Filed: April 19, 2002
For: **TELEVISION PROXIMITY SENSOR**

DECISION ON PETITION
TO MAKE SPECIAL

This is a decision on the petition filed October 15, 2002, under Manual of Patent Examination Procedure §708.02, VIII requesting accelerated examination.

The petition under Manual of Patent Examination Procedure §708.02, VIII, must:
(1) be filed prior to receiving any examination by the examiner,
(2) be accompanied by the required fee- $130,
(3) the claims should be directed to a single invention (if it is determined that the claims pertain to more than one invention, then applicant will have to make an election without traverse or forfeit accelerated examination status),
(4) state that a pre-examination search was made, and fully discuss the search method employed, such as classes and subclasses searched, publications, Chemical abstracts, patents, etc. A search made by a foreign patent office satisfies this requirement,
(5) be accompanied by a copy of each of the references most closely related to the subject matter encompassed by the claims if said references are not already of record,
(6) fully discuss the references, pointing out with the particularity required by 37 C.F.R. §1.111(b) and (c), how the claimed subject matter is patentable over the references.

The petition meets all the above-listed requirements. Accordingly, the petition is **GRANTED**.

The application will retain its special status throughout its entire prosecution, including any appeal to the Board of Patent Appeals and Interferences, subject only to diligent prosecution by the applicant. After mailing, the application will be forwarded to the examiner for immediate handling.

Krista Zele
Special Program Examiner
Technology Center 2600
Communications
(703) 305-4701

DOCKETED
12/23/02

RECEIVED
DEC 17 2002
By Kmzeldh
712722-296

UNITED STATES PATENT AND TRADEMARK OFFICE

Commissioner for Patents
United States Patent and Trademark Office
P.O. Box 1450
Alexandria, VA 22313-1450
www.uspto.gov

ARENT FOX KINTNER PLOTKIN & KAHN
1050 CONNECTICUT AVENUE, N.W.
SUITE 400
WASHINGTON, DC 20036

COPY MAILED

MAY 2 6 2004

OFFICE OF PETITIONS

In re Application of
Fumino Nakajima, et al.
Application No. 10/125,585
Filed: April 19, 2002
Attorney Docket No. 025347-00001

ON PETITION

This is a decision on the petition, filed May 18, 2004, to revive the above-identified application under the provisions of 37 CFR 1.137(b).

The above-identified application became abandoned for failure to reply in a timely manner to the non-final Office action mailed March 6, 2003, which set a shortened statutory period for reply of one (1) month or thirty (30) days (whichever is later). No extensions of time under the provisions of 37 CFR 1.136(a) were obtained. A Notice of Abandonment was mailed on November 25, 2003. On May 18, 2004, petitioner submitted the present petition, the proposed response and a five (5) month petition for extension of time.

Extensions of time under 37 CFR 1.136 are available only if asked for "prior to or with the response." In no case, however, may an applicant respond later than the maximum time period set by statute. Accordingly, if the question of abandonment arises when the provisions of 37 CFR 1.136 can no longer be used, then the application is abandoned when the unextended time for response has expired. Therefore, no extension of time fees are due on a petition for revival. In view thereof, the $2,010 extension of time fee submitted with the petition is unnecessary and will be refunded to petitioner's deposit account.

The petition is **GRANTED**.

Telephone inquiries concerning this decision may be directed to the undersigned at (703) 305-9220. All other inquiries regarding this application should be directed to the Technology Center.

The application is being referred to Technology Center AU 2834 for consideration of the response filed May 18, 2004.

Sherry D. Brinkley
Petitions Examiner
Office of Petitions
Office of the Deputy Commissioner
for Patent Examination Policy

UNITED STATES PATENT AND TRADEMARK OFFICE

Commissioner for Patents
United States Patent and Trademark Office
P.O. Box 1450
Alexandria, VA 22313-1450
www.uspto.gov

Paper No. 082004

ANTONELLI, TERRY, STOUT & KRAUS, LLP
1300 NORTH SEVENTEENTH STREET
SUITE 1800
ARLINGTON, VA 22209

OCT 1 2004

In re Application of:	:	
MARTIN SAINT-LAURENT	:	DECISION ON REQUEST TO WITHDRAW
Serial No.: 10/125,591	:	FROM RECORD
Filed: April 19, 2002	:	
Attorney Docket No.: **219.40867X00**	:	

This is a decision on the request to withdraw as attorney of record under 37 C.F.R. § 1.36, filed June 23, 2003.

The request is **DISMISSED** as moot.

A review of the application file record reveals a proper revocation and power of attorney to the attorneys of Schwegman, Lundberg, Woessner & Kluth, P.A. on March 01, 2004. As such, the power of attorney for the attorneys and agents requesting withdrawal has already been revoked. Accordingly, the present request is moot, and must be dismissed.

All future communications from the Office will continue to be directed to the below-listed address until otherwise notified by applicant.

Inquiries related to this decision should be directed to Edward Westin at (571) 272-1638.

Edward Westin

Edward Westin, Special Programs Examiner
Technology Center 2800
Semiconductors, Electrical and Optical
Systems and Components

cc: SCHWEGMAN, LUNDBERG, WOESSNER & KLUTH, P.A.
P.O. BOX 2938
MINNEAPOLIS, MN 55402

UNITED STATES PATENT AND TRADEMARK OFFICE

COMMISSIONER FOR PATENTS
UNITED STATES PATENT AND TRADEMARK OFFICE
WASHINGTON, D.C. 20231
www.uspto.gov
DW 08-02

Paper No. 4

BRISTOL-MYERS SQUIBB PHARMA COMPANY
PATENT DEPARTMENT
P.O. BOX 4000
PRINCETON NJ 08543-4000

COPY MAILED

AUG 26 2002

OFFICE OF PETITIONS

In re Application of	:	
Wilde et al.	:	
Application No. 10/125,623	:	ON PETITION
Filed: 18 April, 2002	:	
Attorney's Docket No. DM-6995-A	:	

This is a decision on the petition filed on 30 July, 2002, requesting that the above-identified application be accorded a filing date of 18 April, 2002, with Page 1 of the specification as a part of the original disclosure.

The petition is granted.

The application was filed on 18 April, 2002. However, on 11 June, 2002, Initial Patent Examination Division mailed a "Notice" stating, *inter alia*, that the application had been accorded a filing date but that Page 1 of the specification (description and claims) appeared to have been omitted.

In response, on 30 July, 2002, Page 1 of the specification and the present petition were filed. Petitioners argue that Page 1 was filed with the other application papers on 18 April, 2002, but was subsequently misplaced in the U.S. Patent and Trademark Office (Office). In support, a copy of petitioners' postcard receipt was supplied with the present petition. The postcard receipt shows an Office date stamp of 18 April, 2002, and the above-identified application number, and identifies the application by the docket number, and acknowledges receipt of, *inter alia*, 117 pages of specification. Petitioners request that the application, including Page 1 of the specification, be accorded a filing date of 18 April, 2002.

A review of the record reveals that no Page 1 of the specification has been located among the application papers deposited on 18 April, 2002. However, the evidence is convincing that the application papers deposited on 18 April, 2002, included Page 1 of the specification, which was subsequently misplaced in

the Office. Therefore, the application, including Page 1 of the specification, is entitled to a filing date of 18 April, 2002.

The "Notice" mailed on 11 June, 2002, is vacated.

In view of the above, the petition is granted. The petition fee of $130.00 will be refunded to counsel's deposit account.

The application will be processed and examined using the copy of Page 1 supplied on 30 July, 2002.

The application is being returned to Initial Patent Examination Division for further processing with a filing date of 18 April, 2002, using the application papers filed on 18 April, 2002, and the copy of Page 1 supplied on 30 June, 2002.

Telephone inquires should be directed to the undersigned at 703 308-6918.

D Wood

Douglas I. Wood
Senior Petitions Attorney
Office of Petitions
Office of the Deputy Commissioner
for Patent Examination Policy

UNITED STATES PATENT AND TRADEMARK OFFICE

Commissioner for Patents
United States Patent and Trademark Office
P.O. Box 1450
Alexandria, VA 22313-1450
www.uspto.gov

DLA PIPER RUDNICK GRAY CARY US, LLP
4365 EXECUTIVE DRIVE
SUITE 1100
SAN DIEGO CA 92121-2133

COPY MAILED

FEB 2 4 2005

OFFICE OF PETITIONS

In re Application of	:	
Patrick C. Cirino et al	:	
Application No. 10/125,640	:	ON PETITION
Filed: April 16, 2002	:	
Attorney Docket No. 4056/1K237US3	:	

This is a decision on the petition under 37 CFR 1.137(b), filed December 7, 2004, to revive the above-identified application.

The petition is **GRANTED**.

The above-identified application became abandoned for failure to reply in a timely manner to the Notice To File Missing Parts Of Nonprovisional Application mailed May 10, 2002, which set a shortened statutory period for reply of two (2) months. No extensions of time under the provisions of 37 CFR 1.136(a) were obtained. Accordingly, the above-identified application became abandoned on July 11, 2002.

Additionally, the power of attorney submitted December 7, 2004 is **not** accepted because compliance with 37 CFR 3.73(b) has not been met. A blank copy of the form for 37 CFR 3.73(b) is attached for your convenience.

Telephone inquiries concerning this decision should be directed to the undersigned at (571) 272-3208.

This application is being forwarded to the Office of Initial Patent Examination.

Karen Creasy

Karen Creasy
Petitions Examiner
Office of Petitions
Office of the Deputy Commissioner
for Patent Examination Policy

Attachment: Blank form for 37 CFR 3.73(b)

UNITED STATES PATENT AND TRADEMARK OFFICE

Commissioner for Patents
United States Patent and Trademark Office
P.O. Box 1450
Alexandria, VA 22313-1450
www.uspto.gov

MORGAN LEWIS & BOCKIUS LLP
1111 PENNSYLVANIA AVENUE NW
WASHINGTON, DC 20004

COPY MAILED

MAY 03 2006

OFFICE OF PETITIONS

In re Application of	:	
Jae Yong Park et al	:	
Application No. 10/125,642	:	DECISION GRANTING PETITION
Filed: April 19, 2002	:	UNDER 37 CFR 1.313(c)(2)
Attorney Docket No. 049128-5067	:	

This is a decision on the petition, filed April 26, 2006, under 37 CFR 1.313(c)(2) to withdraw the above-identified application from issue after payment of the issue fee.

The petition is **GRANTED**.

The above-identified application is withdrawn from issue for consideration of a submission under 37 CFR 1.114 (request for continued examination). See 37 CFR 1.313(c)(2).

Petitioner is advised that the issue fee paid on March 17, 2006 in the above-identified application cannot be refunded. If, however, the above-identified application is again allowed, petitioner may request that it be applied towards the issue fee required by the new Notice of Allowance.[1]

Telephone inquiries should be directed to the undersigned at (571) 272-3218.

This matter is being referred to Technology Center AU 1774 for processing of the request for continued examination under 37 CFR 1.114 and for consideration of the Information Disclosure Statement.

Frances Hicks
Petitions Examiner
Office of Petitions

C:\Documents and Settings\FHicks\My Documents\470\may9\125642.wpd

---

[1] *The request to apply the issue fee to the new Notice may be satisfied by completing and returning the new Part B – Fee(s) Transmittal Form (along with any balance due at the time of submission), which includes the following language thereon: "The Director of the USPTO is requested to apply the Issue Fee and Publication Fee (if any) or to re-apply any previously paid issue fee in the application identified above. Petitioner is advised that, whether a fee is indicated as being due or not, the Issue Fee Transmittal Form* ***must*** *be completed and timely submitted to avoid abandonment. Note the language in bold text on the first page of the Notice of Allowance and Fee(s) Due (PTOL-85).*

UNITED STATES PATENT AND TRADEMARK OFFICE

COMMISSIONER FOR PATENTS
UNITED STATES PATENT AND TRADEMARK OFFICE
WASHINGTON, D.C. 20231
www.uspto.gov

Paper 6

YA-CHIAO CHANG
ATTORNEY AT LAW
SUITE 44
132 EAST 17TH STREET
NEW YORK, NY 10003

COPY MAILED

MAR 2 8 2003

OFFICE OF PETITIONS

In re Application of
Kuo et al.
Application No.10/125,644
Filed: April 19, 2002
Attorney Docket No. 3691/1J158US1

DECISION ON PETITION

This is a decision on the petition under 37 CFR §1.137(b), filed March 17, 2003, to revive the above-identified application.

This above-identified application became abandoned for failure to file a response to a Notice to file Missing Parts of a Nonprovisional Application which was mailed on May 20, 2002. The Notice to File Missing Parts set a two (2) month period for reply. No extensions of time were obtained under the provisions of 37 CFR §1.136(a). Accordingly, this application became abandoned on July 21, 2002. This decision precedes the mailing of a Notice of Abandonment.

The requirements for a grantable petition under 37 CFR §1.137(b) have been met. This petition is hereby **Granted**.

It is not apparent whether the person signing the statement of unintentional delay was in a position to have firsthand or direct knowledge of the facts and circumstances of the delay at issue. Nevertheless, such statement is being treated as having been made as the result of a reasonable inquiry into the facts and circumstances of such delay. See 37 CFR §10.18(b). In the event that such an inquiry has not been made, petitioner must make such an inquiry. If such inquiry results in the discovery that it is not correct that the entire delay in filing the required reply from the due date for the reply until the filing of a grantable petition pursuant to 37 CFR §1.137(b) was unintentional, petitioner must notify the Office.

There is no indication that the person signing the instant petition was ever given a power of attorney or authorization of agent to prosecute the above-identified application. If the person signing the instant petition desires to receive future correspondence regarding this application, the appropriate power of attorney or authorization of agent must be submitted. While a courtesy copy of this decision is being mailed to the person signing the instant petition, all future correspondence will be directed to the address of currently of record until such time as appropriate instructions are received to the contrary.

The Office acknowledges receipt of the declaration and power of attorney submitted with the instant petition and the substitute drawings.

This application is being forwarded to the Office of Initial Patent Examination for further processing of the application.

Telephone inquiries concerning this matter should be directed to the undersigned at (703) 306-0251.

Charlema R. Grant
Petitions Attorney
Office of Petitions

UNITED STATES PATENT AND TRADEMARK OFFICE

UNDER SECRETARY OF COMMERCE FOR INTELLECTUAL PROPERTY AND
DIRECTOR OF THE UNITED STATES PATENT AND TRADEMARK OFFICE
WASHINGTON, DC 20231
www.uspto.gov

MAILED

NOV 14 2002

DIRECTOR'S OFFICE
TECHNOLOGY CENTER 3600

Antonelli, Terry, Stout and Kraus
Suite 1800
1300 North Seventeenth Street
Arlington, VA 22209

In re application of
Marcelo Ruiz-Sanchez
Application No. 10/125,645 :
Filed: April 19, 2002 :
For: METHODS AND APPARATUS FOR PROTECTING AGAINST CREDIT CARD FRAUD, CHACK FRAUD, AND IDENTITY THEFT :

DECISION ON REQUEST FOR WITHDRAWAL OF ATTORNEY

This is a decision on the request filed on October 18, 2002, under 37 CFR 1.36 and MPEP 402.06, requesting permission to withdraw as the attorney of record in the above-identified application.

The request is **NOT APPROVED**.

Under 37 CFR 1.36 an attorney may withdraw only upon application to and approval by the Commissioner. It should be noted that a withdrawal is effective when approved, not when filed. Besides giving due notice to his or her client and delivering to the client all papers and property to which the client is entitled as specified under 37 CFR 10.40, approval of such a request requires that the following conditions be met:

A) Each attorney of record must sign the notice of withdrawal, or the notice must contain a clear indication of one attorney signing on behalf of another, because the Office does not recognize law firms;

B) A proper reason for the withdrawal as enumerated in 37 CFR 10.40(b) or subsection (1)-(6) of 37 CFR 10.40(c) must be provided; and

C) If withdrawal is requested in accordance with 37 CFR 10.40(c) above, there must be at least 30 days between approval of the withdrawal and the later of the expiration date of a time period for reply or the expiration date of the period which can be obtained by a petition and fee for extension of time under 37 CFR 1.136(a).

The request to withdraw as attorney in the above-identified application is not approved because the request does not comply with Items A) and B).

As to Item A), there are currently 23 attorneys having power in this application. The request only lists withdrawal for 12. If only the attorneys listed in the request are to have power withdrawn and the remaining attorneys are intended to remain having power of attorney for this case, this needs to be made clear in any supplemental request; otherwise the other attorneys, or a statement that all attorneys of record, would need to be added to the request.

As to Item B), there is no reason for withdrawal listed in the request. A reason in compliance with 37 CFR 10.40 is required.

Steven N. Meyers
Special Programs Examiner
Patent Technology Center 3600
(703) 308-3868
Facsimile No.: (703) 605-0586

snm: 11/13/02

UNITED STATES PATENT AND TRADEMARK OFFICE

COMMISSIONER FOR PATENTS
UNITED STATES PATENT AND TRADEMARK OFFICE
WASHINGTON, D.C. 20231
www.uspto.gov
DIW 01-03

Paper No. 5

JONAR J. TOLENTINO
DORSEY & WHITNEY LLP
220 SOUTH SIXTH STREET
MINNEAPOLIS MN 55402-1498

COPY MAILED

JAN 1 0 2003

OFFICE OF PETITIONS

In re Application of Wanek et al. Application No. 10/125,653 Filed: 18 April, 2002 Atty Docket No. 14053.01	: : : : :	ON PETITION

Receipt is acknowledged of the petition filed on 27 December, 2002, captioned "Petition to Correct Filing Date" which is treated as a petition that the above-identified application be accorded a filing date of 18 April, 2002.

The petition is **GRANTED**.

The application was filed on 12 April, 2002. However, on 24 May, 2002, Initial Patent Examination Division mailed a "Notice" stating that the application had been accorded a filing date of 18 April, 2002, and advising applicant that, *inter alia*, Figures 4A and 4B described in the specification appeared to have been omitted and that substitute drawings in compliance with 37 CFR 1.84 were required.

In response, on 30 July, 2002, petitioners filed substitute drawings, including two sheets containing figures labeled Figure 4A and 4B, respectively. Accordingly, the application was assigned a filing date of 30 July, 2002.

In response, the present petition was filed. Petitioners explain that Figures 4A and 4B were not missing on 18 April, 2002. Instead, the application included one sheet of drawings, labeled Figure 4, which contains two drawing figures, which are the Figures 4A and 4B described in the specification. Petitioners request the application be accorded a filing date of 18 April, 2002.

It is obvious from the petition that no drawings were actually missing on 18 April, 2002. Rather, the drawings of Figures 4A and 4B were simply mislabeled as a result of the applicant's filing error. However, the "Notice" mailed on 14 May, 2002, was correct in stating that Figures 4A and 4B described in the specification appeared to have been omitted. Therefore, the "Notice" was properly mailed and will not be withdrawn.

The present petition was not necessitated by any error on the part of the Office and the $130.00 petition was required upon filing of the petition. Thus, the $130.00 petition fee will not be refunded.

The application will be reprocessed with a filing date of 18 April, 2002, using only the application papers filed on 18 April, 2002. The copies of the drawing figures supplied with the present petition will not be used for processing or examination, but will be retained in the application file.

An amendment correcting the drawings filed on 18 April, 2002, to show the proper figure labels should be filed prior to the first action on the merits.

The application is being returned to the Office of Initial Patent Examination for further processing with a filing date of 18 April, 2002, using the application papers filed on that date.

Receipt is acknowledged of the substitute drawings filed on 30 July, 2002. The substitute drawings are not part of the original disclosure and must be reviewed by the examiner for new matter.

Telephone inquiries concerning this matter may be directed to the undersigned at (703) 308-6918.

Douglas I. Wood
Senior Petitions Attorney
Office of Petitions
Office of the Deputy Commissioner
for Patent Examination Policy

UNITED STATES PATENT AND TRADEMARK OFFICE

COMMISSIONER FOR PATENTS
UNITED STATES PATENT AND TRADEMARK OFFICE
WASHINGTON, D.C. 20231
www.uspto.gov

Paper No. 6

COPY MAILED

NOV 04 2002

OFFICE OF PETITIONS

BROMBERG & SUNSTEIN LLP
NORTEL NETWORKS LIMITED
600 TECHNOLOGY PARK DRIVE, MS E65-60-403
BILLERICA, MA 01821

In re Application of Lapuh, et al. Application No. 10/125,654 Filed: April 18, 2002 Attorney Docket No.: 2204/C24 For: SYSTEM, DEVICE, AND METHOD FOR IMPROVING COMMUNICATION NETWORK RELIABILITY USING TRUNK SPLITTING	DECISION GRANTING STATUS UNDER 37 CFR 1.47(a)

This is in response to the petition under 37 CFR 1.47(a), filed July October 1, 2002.

The petition is **GRANTED**.

Petitioner has shown that inventor Joseph M. Regan has refused to join in the filing of the above-identified application after having been presented with the application papers.

The above-identified application and papers have been reviewed and found in compliance with 37 CFR 1.47(a). This application is hereby accorded Rule 1.47(a) status.

As provided in Rule 1.47(c), this Office will forward notice of this application's filing to the non-signing inventor at the address given in the petition. Notice of the filing of this application will also be published in the Official Gazette.

After this decision is mailed, the above-identified application will be returned to the Office of Initial Patent Examination for further processing.

Telephone inquiries regarding this decision should be directed to the undersigned at (703) 305-0310.

Alesia M. Brown
Petitions Attorney
Office of Petitions
Office of the Deputy Commissioner
for Patent Examination Policy

UNITED STATES PATENT AND TRADEMARK OFFICE

COMMISSIONER FOR PATENTS
UNITED STATES PATENT AND TRADEMARK OFFICE
WASHINGTON, D.C. 20231
www.uspto.gov

JOSEPH M. REGAN
7863 FOOTHILL KNOLLS DRIVE
PLEASANTON, CA 94588

COPY MAILED

NOV 04 2002

OFFICE OF PETITIONS

In re Application of
Lapuh, et al.
Application No. 10/125,654
Filed: April 18, 2002
Attorney Docket No.: 2204/C24
For: SYSTEM, DEVICE, AND METHOD FOR IMPROVING COMMUNICATION NETWORK RELIABILITY USING TRUNK

LETTER

Dear Sir:

You are named as an inventor in the above-identified United States patent application filed under the provisions of 35 U.S.C. 116 (United States Code) and 37 C.F.R. § 1.47(a), Rules of Practice in Patent Cases. Should a patent be granted on the application you will be designated therein as a joint inventor.

As a named inventor you are entitled to inspect any paper in the file wrapper of the application, order copies of all or any part thereof (at a prepaid cost as per 37 C.F.R. § 1.19) or make your position of record in the application. Alternatively, you may arrange to do any of the preceding through a registered patent attorney or agent presenting written authorization from you. If you care to join the application, counsel of record (see below) would presumably assist you. Joining in the application would entail the filing of an appropriate oath or declaration by you pursuant to 37 C.F.R. § 1.63.

Telephone inquiries regarding this communication should be directed to the undersigned at (703) 305-0310. Requests for information regarding your application should be directed to the File Information Unit at (703) 308-2733. Information regarding how to pay for and order a copy of the application, or a specific paper in the application, should be directed to Certification Division at (703) 308-9726 or 1-800-972-6382 (outside the Washington D.C. area).

Alesia M. Brown
Petitions Attorney
Office of Petitions
Office of the Deputy Commissioner
for Patent Examination Policy

CC: BROMBERG & SUNSTEIN LLP
NORTEL NETWORKS LIMITED
600 TECHNOLOGY PARK DRIVE, MS E65-60-403
BILLERICA, MA 01821

UNITED STATES PATENT AND TRADEMARK OFFICE

Commissioner for Patents
United States Patent and Trademark Office
Washington, D.C. 20231
www.uspto.gov

JOHN VICARS
11083 WILD BASIN
LONGMONT CO 80504

COPY MAILED

APR 0 8 2003

OFFICE OF PETITIONS

In re Application of :
Gang H. Lin, Erhard Schreck, Kezhao :
Zhang, Don Brunnett, Duc Banh, Kurt M. :
Rusnak, Jingbo Yu, Suet E. Tao, Nick :
Warner, and John Vicars :
Application No. 10/125,657
Filed: April 18, 2002
Title: METHODS OF MONITORING THE ERASURE OF SIDE TRACKS IN A MAGNETIC STORAGE DEVICE

LETTER

Dear Mr. Vicars:

You are named as a joint inventor in the above-identified United States patent application filed under the provisions of 35 USC 116 (United States Code) and 37 CFR 1.47(a), Rules of Practice in Patent Cases. Should a patent be granted on the application you will be designated therein as a joint inventor.

As a named inventor you are entitled to inspect any paper in the file wrapper of the application, order copies of all or any part thereof (at a prepaid cost per 37 CFR 1.19) or make your position of record in the application. Alternatively, you may arrange to do any of the preceding through a registered patent attorney or agent presenting written authorization from you. If you care to join the application, agent of record (see below) would presumably assist you. Joining in the application would entail the filing of an appropriate oath or declaration by you pursuant to 37 CFR 1.63.

Telephone inquiries regarding this communication should be directed to Petitions Attorney Cliff Congo at (703) 305-0272. Requests for information regarding your application should be directed to the File Information Unit at (703) 308-2733. Information regarding how to pay for and order a copy of the application, or a specific paper in the application, should be directed to the Certification Division at (703) 308-9726 or 1-800-972-6382 (outside the Washington D.C. area).

Cliff Congo
Petitions Attorney
Office of Petitions

Tejpal S. Hansra
Hansra Patent Services
3705 Canterbury Lane #6
Bellingham, WA 98225
(360)527-1400

UNITED STATES PATENT AND TRADEMARK OFFICE

Commissioner for Patents
United States Patent and Trademark Office
Washington, D.C. 20231
www.uspto.gov

Paper No. 7

TEJPAL S HANSRA
3705 CANTERBURY LANE #6
BELLINGHAM WA 98225

COPY MAILED

APR 0 8 2003

OFFICE OF PETITIONS

In re Application of
Lin, et al.
Application No. 10/125,657
Filed: April 18, 2002
Attorney Docket No. 3123-410

DECISION ACCORDING STATUS
UNDER 37 CFR 1.47(a)

This is in response to the petition under 37 CFR 1.47(a), filed December 2, 2002.

The petition under 37 CFR 1.47(a) is **GRANTED**.

The above-identified application was filed on April 18, 2002. On May 23, 2002, petitioner was mailed a "Notice to File Missing Parts of Nonprovisional Application - Filing Date Granted," requiring an executed oath or declaration and a surcharge for its late filing. This Notice set a two-month period for reply.

In reply, applicant filed the instant petition under 37 CFR 1.47(a) and paid the surcharge for late filing of the declaration. To make timely this reply, applicant obtained a four month extension of time and included a Certificate of Mailing dated November 25, 2002.[1] Accompanying the petition was a declaration executed by joint inventors Gang H. Lin, Erhard Schreck, Kezhao Zhang, Don Brunnett, Duc Banh, Kurt M. Rusnak, Jingbo Yu, Suet E. Tao, and Nick Warner, but lacking a signature from joint inventor John Vicars.

A grantable petition under 37 CFR 1.47(a) requires: (1) proof that the non-signing inventor cannot be reached or refuses to sign the oath or declaration after having been presented with the application papers (specification, claims, drawings, oath or declaration); (2) an acceptable oath or declaration in compliance with 37 CFR 1.63; (3) the petition fee; and (4) a statement of the last known address of the non-signing inventors.

On petition, attorney Tejpal S. Hansra has detailed the steps taken to locate Vicars, including contacting Vicars' prior employer and conducting internet searches. In addition, a copy of the application papers was mailed to the last known address of Vicars and was signed for. However, as of the date of the petition, no executed declaration from Vicars has been received.

---

[1] November 23rd and 24th fell on a Saturday and Sunday, respectively. See 37 CFR 1.7(a).

The petition filed December 2, 2002, has been reviewed and determined to be in compliance with 37 CFR 1.47(a). The declaration filed with the petition has been determined to be in compliance with 37 CFR 1.63. Accordingly, the above-identified application is hereby accorded Rule 1.47(a) status.

As provided in 37 CFR 1.47(c), this Office will forward notice of this application's filing to the non-signing inventor at the address given in the petition. Notice of the filing of this application will also be published in the Official Gazette.

The application file is being forwarded to the Office of Initial Patent Examination for pre-examination processing.

Telephone inquiries related to this decision may be directed to the undersigned at (703) 305-0272.

Cliff Congo

Cliff Congo
Petitions Attorney
Office of Petitions

UNITED STATES PATENT AND TRADEMARK OFFICE

Commissioner for Patents
United States Patent and Trademark Office
P.O. Box 1450
Alexandria, VA 22313-1450
www.uspto.gov
DIW Mar-06

HANSRA PATENT SERVICES
4525 GLEN MEADOWS PLACE
BELLINGHAM WA 98226

COPY MAILED

MAR 07 2006

OFFICE OF PETITIONS

In re Application of	:	
Lin et al.	:	
Application No. 10/125,657	:	DECISION ON PETITION
Filed: 18 April, 2002	:	
Atty Docket No. 3123-410	:	

This is a decision on the petition filed on 12 September, 2005, under 37 CFR 1.137(b),[1] to revive the above-identified application.

The petition is **GRANTED**.

The application became abandoned on 13 September, 2004, for failure to timely respond to the Office action requiring restriction and/or election, mailed on 12 August, 2004, which set a one (1) month shortened statutory period for reply. No extensions of time in accordance with 37 CFR 1.136(a) were obtained. Notice of Abandonment was mailed on 10 March, 2005.

Petitioner has filed an election as the response to the restriction requirement.

---

[1] Effective December 1, 1997, the provisions of 37 CFR 1.137(b) now provide that where the delay in reply was unintentional, a petition may be filed to revive an abandoned application or a lapsed patent pursuant to 37 CFR 1.137(b). A grantable petition filed under the provisions of 37 CFR 1.137(b) must be accompanied by:

(1) the required reply, unless previously filed. In a nonprovisional application abandoned for failure to prosecute, the required reply may be met by the filing of a continuing application. In a nonprovisional utility or plant application filed on or after June 8, 1995, and abandoned for failure to prosecute, the required reply may also be met by the filing of a request for continuing examination in compliance with § 1.114. In an application or patent, abandoned or lapsed for failure to pay the issue fee or any portion thereof, the required reply must be the payment of the issue fee or any outstanding balance thereof. In an application abandoned for failure to pay the publication fee, the required reply must include payment of the publication fee.

(2) the petition fee as set forth in 37 CFR 1.17(m);

(3) a statement that the entire delay in filing the required reply from the due date for the reply until the filing of a grantable petition pursuant to 37 CFR 1.137(b) was unintentional. The Commissioner may required additional information where there is a question whether the delay was unintentional; and

(4) any terminal disclaimer (and fee as set forth in 37 CFR 1.20(d)) required pursuant to 37 CFR 1.137(c)).

This application is being referred to Technology Center Art Unit 2651 for further processing.

Telephone inquiries concerning this matter may be directed to the undersigned at (571)272-3231.

D Wood

Douglas I. Wood
Senior Petitions Attorney
Office of Petitions

::ODMA\MHODMA\iManage;330103;1
DEB/DES/cmm
07/30/02

OIPE
AUG 0 6 2002
PATENT & TRADEMARK OFFICE

PATENT APPLICATION
Docket No.:3298.1009-000

#3

IN THE UNITED STATES PATENT AND TRADEMARK OFFICE

Applicant: Brian Leyland-Jones

Serial No.: 10/125,690 Group Art Unit: 1636

Filed: April 17, 2002

For: INDIVIDUALIZATION OF THERAPY WITH HYPERLIPIDEMIA AGENTS

CERTIFICATE OF MAILING

I hereby certify that this correspondence is being deposited with the United States Postal Service with sufficient postage as First Class Mail in an envelope addressed to Assistant Commissioner for Patents, Box Sequence, P.O. Box 2327, Arlington, VA 22202

on 7/31/02 Christina McSweeney
Date Signature

Christina McSweeney
Typed or printed name of person signing certificate

TRANSMITTAL OF SEQUENCE LISTING
IN REPLY TO NOTICE TO FILE MISSING PARTS

Assistant Commissioner for Patents
Box Sequence, P.O. Box 2327
Arlington, VA 22202

Sir:

This paper is submitted in response to the Notice to File Missing Parts of Application, mailed from the Patent Office on May 31, 2002. A copy of the Notice is attached.

Transmitted herewith is a copy of the "Sequence Listing" (sheets 1/5 through 5/5) in paper form for the above-identified patent application as required by 37 C.F.R. §1.821(c) and a copy of the "Sequence Listing" in computer readable form as required by 37 C.F.R. §1.821(e). As required by 37 C.F.R. §1.821(f), Applicant's Attorney hereby states that the content of the "Sequence Listing" in paper form and the computer

readable form of the "Sequence Listing" are the same and, as required by 37 C.F.R. §1.821(g), also states that the submission includes no new matter.

Respectfully submitted,

HAMILTON, BROOK, SMITH & REYNOLDS, P.C.

By Deirdre E. Sanders

Deirdre E. Sanders
Registration No. 42,122
Telephone: (978) 341-0036
Facsimile: (978) 341-0136

Concord, MA 01742-9133

Date: July 31, 2002

::ODMA\MHODMA\iManage;330103;1

#4

UNITED STATES PATENT AND TRADEMARK OFFICE

COMMISSIONER FOR PATENTS
UNITED STATES PATENT AND TRADEMARK OFFICE
WASHINGTON, D.C. 20231
www.uspto.gov

APPLICATION NUMBER	FILING/RECEIPT DATE	FIRST NAMED APPLICANT	ATTORNEY DOCKET NUMBER
10/125,690	04/17/2002	Brian Leyland-Jones	3298.1009-000

OIPE JC26 AUG 0 6 2002 PATENT & TRADEMARK OFFICE

CONFIRMATION NO. 9977

FORMALITIES LETTER

OC000000008213718

21005
HAMILTON, BROOK, SMITH & REYNOLDS, P.C.
530 VIRGINIA ROAD
P.O. BOX 9133
CONCORD, MA 01742-9133

Date Mailed: 05/31/2002

NOTICE TO FILE MISSING PARTS OF NONPROVISIONAL APPLICATION

FILED UNDER 37 CFR 1.53(b)

Filing Date Granted

Items Required To Avoid Abandonment:

An application number and filing date have been accorded to this application. The item(s) indicated below, however, are missing. Applicant is given **TWO MONTHS** from the date of this Notice within which to file all required items and pay any fees required below to avoid abandonment. Extensions of time may be obtained by filing a petition accompanied by the extension fee under the provisions of 37 CFR 1.136(a).

- The statutory basic filing fee is missing.
  Applicant must submit $ **740** *to complete the basic filing fee for a non-small entity. If appropriate, applicant may make a written assertion of entitlement to small entity status and pay the small entity filing fee (37 CFR 1.27).*
- The oath or declaration is missing.
  A properly signed oath or declaration in compliance with 37 CFR 1.63, identifying the application by the above Application Number and Filing Date, is required.
- To avoid abandonment, a late filing fee or oath or declaration surcharge as set forth in 37 CFR 1.16(l) of $130 for a non-small entity, must be submitted with the missing items identified in this letter.

Items Required To Avoid Processing Delays:

The item(s) indicated below are also required and should be submitted with any reply to this notice to avoid further processing delays.

- Additional claim fees of $**2094** as a non-small entity, including any required multiple dependent claim fee, are required. Applicant must submit the additional claim fees or cancel the additional claims for which fees are due.

SUMMARY OF FEES DUE:

Total additional fee(s) required for this application is $**2964** for a Large Entity

08/08/2002 NBELETZ1 00000067 10125690
01 FC:201 370.00 OP
02 FC:205 65.00 OP
03 FC:202 216.00 OP
04 FC:203 837.00 OP

- **$740** Statutory basic filing fee.
- **$130** Late oath or declaration Surcharge.
- Total additional claim fee(s) for this application is **$2094**
  - **$1674** for **93** total claims over 20.
  - **$420** for **5** independent claims over 3.

A copy of this notice MUST be returned with the reply.

Uma Truong

Customer Service Center
Initial Patent Examination Division (703) 308-1202

PART 2 - COPY TO BE RETURNED WITH RESPONSE

::ODMA\MHODMA\iManage;330106;1
DEB/DES/cmm
07/30/02

PATENT APPLICATION
Docket No.:3298.1009-000

MP

IN THE UNITED STATES PATENT AND TRADEMARK OFFICE

OIPE JC26 AUG 0 6 2002 PATENT & TRADEMARK OFFICE

Applicant:	Brian Leyland-Jones		
Application No.:	10/125,690	Group:	1636
Filed:	April 17, 2002		
For:	INDIVIDUALIZATION OF THERAPY WITH HYPERLIPIDEMIA AGENTS		

CERTIFICATE OF MAILING

I hereby certify that this correspondence is being deposited with the United States Postal Service with sufficient postage as First Class Mail in an envelope addressed to Assistant Commissioner for Patents, P.O. Box 2327, Arlington, VA 22202

on 7/31/02 Christina McSweeney
Date Signature

Christina McSweeney
Typed or printed name of person signing certificate

REPLY TO NOTICE TO FILE MISSING PARTS OF APPLICATION

Box Missing Parts
Assistant Commissioner for Patents
P.O. Box 2327
Arlington, VA 22202

Sir:

In reply to the Notice to File Missing Parts dated May 31, 2002, the following documents and fees are being submitted for filing in the captioned application. A copy of the Notice is attached.

[X] **EXECUTED DECLARATION FOR PATENT APPLICATION**
(Separate transmittal letter and postcard not required)

[ ] **POWER OF ATTORNEY DOCUMENT**
[ ] **GRANTED BY INVENTOR(S)**
[ ] **GRANTED BY ASSIGNEE, including Statement under 37 C.F.R. 3.73(b)**
(Separate transmittal letter and postcard not required)

[X] **PRELIMINARY AMENDMENT**
(Separate transmittal letter and postcard not required)

[X] **FILING FEE** - with Fee Transmittal for Patent Applications in duplicate
Fee calculations based on:
[X] Claims as originally filed
[ ] Claims upon entry of the Preliminary Amendment filed herewith
(Separate transmittal letter and postcard not required)

[X] **SURCHARGE** - surcharge fee of $65.00
(Separate transmittal letter and postcard not required)

[X] **SEQUENCE LISTING** - Filed concurrently and is attached
(Separate transmittal letter and postcard required)

[ ] **SUBSTITUTE DRAWINGS**
[ ] Sheets of substitute drawings consisting of Figs. 1 - [ ] are enclosed
(Separate transmittal letter and postcard not required)

[ ] **PETITION FOR EXTENSION OF TIME**
[ ] Applicant hereby petitions to extend the time to respond to the Notice to File Missing Parts dated [ ] for [ ] month from [ ] to [ ]. The appropriate fee of $[ ] is included in the enclosed check
[ ] A [ ] month extension of time to respond to the Notice to File Missing Parts dated [ ] was filed on [ ] with payment of a $[ ] fee
[ ] Applicant hereby petitions for an additional [ ] month extension of time to respond to the Notice to File Missing Parts. The appropriate fee of $[ ] is included in the enclosed check
(Separate Petition for Extension of Time and postcard not required)

[ ] **REQUEST FOR CORRECTED FILING RECEIPT** - Filed concurrently and is attached
(Separate transmittal letter and postcard required)

[X] **TWO STATEMENTS CLAIMING SMALL ENTITY STATUS**
[ ] Was filed on [ ]
[X] Are enclosed herewith
(Separate transmittal letter and postcard not required)
[ ] In view of the small entity status of the captioned application, we hereby request a reimbursement of 50% of the filing fees in the amount of $[ ] which were paid on [ ] to be deposited in Deposit Account No. 08-0380

The fees required for filing the indicated documents are enclosed in the form of a check in the total amount of **$1482**. Please charge any deficiency or credit any overpayment in the fees that may be due in this matter to Deposit Account No. 08-0380. A copy of this letter is enclosed for accounting purposes.

Respectfully submitted,

HAMILTON, BROOK, SMITH & REYNOLDS, P.C.

By Deirdre E. Sanders

Deirdre E. Sanders
Registration No.: 42,122
Tel.: (978) 341-0036
Fax: (978) 341-0136

Concord, Massachusetts 01742-9133
Date: July 31, 2002

HAMILTON, BROOK, SMITH & REYNOLDS, P.C.

FEE TRANSMITTAL FOR PATENT APPLICATIONS		
	Attorney Docket Number	3298.1009-000
	Application Number	10/125,690
	First Named Inventor	Brian Leyland-Jones

OIPE JC26 AUG 0 6 2002 PATENT & TRADEMARK OFFICE

CLAIM CALCULATION (includes any preliminary amendment)

CLAIMS	(1) FOR	(2) NUMBER FILED	(3) NUMBER EXTRA	(4) RATE	(5) CALCULATIONS
	TOTAL CLAIMS (37 CFR 1.16(c) or (j))	113 – 20* =	93	x $ 18 =	$ 1674
	INDEPENDENT CLAIMS (37 CFR 1.16(b) or (i))	8 – 3** =	5	x $ 84 =	$ 420
	MULTIPLE DEPENDENT CLAIMS (if applicable) (37 CFR 1.16(d))			+ $ 280 =	$
				BASIC FEE (37 CFR 1.16(a) or (h))	$ 740
				Total of above Calculations =	$ 2834
				Reduction by 50% for filing by small entity (37 CFR 1.9, 1.27, 1.28) =	$ 1417
				TOTAL =	$ 1417
				Surcharge - Late Filing of Declaration or Filing Fees (37 C.F.R. 1.16(e)) =	$ 65
				Petition for Extension of Time Fee (37 C.F.R. 1.17) =	$
				Assignment Recordation Fee = (only when filed with application)	$
	* Reissue claims in excess of 20 and over original patent ** Reissue independent claims over original patent			TOTAL =	$ 1482

1. Small entity status:

   a. [X] Two small entity statements are enclosed.

   b. [ ] A small entity statement was filed in the prior non-provisional application and such status is still proper and desired.

   c. [ ] Is no longer claimed.

2. [X] A general authorization is hereby granted to charge deposit account number 08-0380 for any fees required under 37 CFR 1.16 and 1.17 in order to maintain pendency of this application. A copy of this authorization is enclosed for accounting purposes.

3. [X] A check is enclosed for **$1482.** [ ] Please charge **$[ ]** to Deposit Account No. 08-0380.

4. [ ] Other: _____

Signature	Deirdre E. Sanders	Date	July 31, 2002
Submitted by Typed or Printed Name	Deirdre E. Sanders	Reg. Number	42,122

::ODMA\MHODMA\iManage;330107;1

::ODMA\MHODMA\iManage;330122;1
DEB/DES/cmm
07/30/02

PATENT APPLICATION
Docket No.: 3298.1009-000

IN THE UNITED STATES PATENT AND TRADEMARK OFFICE #6

Applicant: Brian Leyland-Jones

Application No.: 10/125,690 Group: 1636

Filed: April 17, 2002

For: INDIVIDUALIZATION OF THERAPY WITH HYPERLIPIDEMIA AGENTS

OIPE JC26 AUG 0 6 2002 PATENT & TRADEMARK OFFICE

CERTIFICATE OF MAILING

I hereby certify that this correspondence is being deposited with the United States Postal Service with sufficient postage as First Class Mail in an envelope addressed to Assistant Commissioner for Patents, P.O. Box 2327, Arlington, VA 22202

on 7/31/02 Christina McSweeney
Date Signature

Christina McSweeney
Typed or printed name of person signing certificate

TRANSMITTAL OF FORMAL DRAWINGS

Box Missing Parts
Assistant Commissioner for Patents
P.O. Box 2327
Arlington, VA 22202

Sir:

Transmitted herewith are formal drawings consisting of 23 sheets, figures 1 through 24, for filing in the subject patent application.

Acceptance of the formal drawings is respectfully requested.

Respectfully submitted,

HAMILTON, BROOK, SMITH & REYNOLDS, P.C.

By Deirdre E. Sanders

Deirdre E. Sanders
Registration No. 42,122
Telephone: (978) 341-0036
Facsimile: (978) 341-0136

Concord, MA 01742-9133
Date: July 31, 2002

UNITED STATES PATENT AND TRADEMARK OFFICE

Commissioner for Patents
United States Patent and Trademark Office
P.O. Box 1450
Alexandria, VA 22313-1450
www.uspto.gov

DECHERT LLP
P.O. BOX 10004
PALO ALTO, CA 94303-0961

COPY MAILED

NOV 3 0 2005

OFFICE OF PETITIONS

In re Application of :
Li-Lan H. Chen, et al. :
Application No. 10/125,696 :
Filed: April 18, 2002 :
Attorney Docket No. 366325-327945 :

ON PETITION

This is a decision on the petition under 37 CFR 1.137(b), filed June 27, 2005, to revive the above-identified application.

The petition is **GRANTED.**

The two-month period for filing an appeal brief in triplicate (accompanied by the fee required by 37 CFR 1.17(c)), runs from the date of this decision.

A review of the file record discloses that a Notice of Improper Request for Continued Examination (RCE) was mailed on June, 21, 2005. The filing fee for the Request for Continued Examination (RCE) filed on May 31, 2005, was not processed; therefore, the request for refund cannot be granted.

The petition satisfies the requirements of 37 CFR 1.137(b) in that petitioner has supplied (1) the reply in the form of a Notice of Appeal; (2) the petition fee of $1,500; and (3) the required statement of unintentional delay have been received.

Telephone inquiries concerning this decision should be directed to the undersigned at (571) 272-3229.

The application matter is being referred to Technology Center 1600, Art Unit 1618 for further processing.

Retta Williams

Retta Williams
Petitions Examiner
Office of Petitions

UNITED STATES PATENT AND TRADEMARK OFFICE

COMMISSIONER FOR PATENTS
UNITED STATES PATENT AND TRADEMARK OFFICE
P.O. BOX 1450
ALEXANDRIA, VA 22313-1450
www.uspto.gov

DANIEL BECKER
DECHERT LLP
1117 CALIFORNIA AVENUE
PALO ALTO, CA 94304

COPY MAILED

AUG 0 1 2006

OFFICE OF PETITIONS

In re Application of	:	
Li-Lan H. Chen et al	:	
Application No. 10/125,696	:	DECISION ON PETITION
Filed: April 18, 2002	:	TO WITHDRAW
Attorney Docket No. 366325-327945	:	FROM RECORD
	:	

This is a decision on the Request to Withdraw as attorney or agent of record under 37 C.F.R. § 1.36(b), filed March 13, 2006.

The request is **NOT APPROVED** as moot.

A review of the file record indicates that the power of attorney to Daniel M. Becker has been revoked by the assignee of the patent application. Accordingly, the request to withdraw under 37 C.F.R. § 1.36(b) is moot.

The correspondence address of record remains unchanged, which is the first address indicated below.

Telephone inquires concerning this decision should be directed to Irvin Dingle at 571-272- 3210.

Amelia Au
Petitions Examiner
Office of Petitions

cc: Lucas & Mercanti, LLP
475 Park Avenue South, 15th Fl.
New York, NY 10016

cc: James L. Osborne, Ph.D.
Lavipharm Laboratories, Inc.
69 Princeton-Hightstown Road
East Windsor, NJ 08520

UNITED STATES PATENT AND TRADEMARK OFFICE

UNITED STATES DEPARTMENT OF COMMERCE
United States Patent and Trademark Office
Address: COMMISSIONER FOR PATENTS
P.O. Box 1450
Alexandria, Virginia 22313-1450
www.uspto.gov

APPLICATION NUMBER	FILING OR 371 (c) DATE	FIRST NAMED APPLICANT	ATTY. DOCKET NO./TITLE
10/125,696	04/18/2002	Li-Lan H. Chen	366325-327945

CONFIRMATION NO. 9979

OC000000019787878

OC000000019787878

20311
LUCAS & MERCANTI, LLP
475 PARK AVENUE SOUTH
15TH FLOOR
NEW YORK, NY 10016

Date Mailed: 07/27/2006

NOTICE OF ACCEPTANCE OF POWER OF ATTORNEY

This is in response to the Power of Attorney filed 07/26/2006.

The Power of Attorney in this application is accepted. Correspondence in this application will be mailed to the above address as provided by 37 CFR 1.33.

IRVIN DINGLE
OP (571) 272-3210

ATTORNEY/APPLICANT COPY

UNITED STATES PATENT AND TRADEMARK OFFICE

UNITED STATES DEPARTMENT OF COMMERCE
United States Patent and Trademark Office
Address: COMMISSIONER FOR PATENTS
P.O. Box 1450
Alexandria, Virginia 22313-1450
www.uspto.gov

APPLICATION NUMBER	FILING OR 371 (c) DATE	FIRST NAMED APPLICANT	ATTY. DOCKET NO./TITLE
10/125,696	04/18/2002	Li-Lan H. Chen	366325-327945

CONFIRMATION NO. 9979

OC000000019787799

OC000000019787799

37509
DECHERT LLP
P.O. BOX 10004
PALO ALTO, CA 94303

Date Mailed: 07/27/2006

NOTICE REGARDING CHANGE OF POWER OF ATTORNEY

This is in response to the Power of Attorney filed 07/26/2006.

- The Power of Attorney to you in this application has been revoked by the assignee who has intervened as provided by 37 CFR 3.71. Future correspondence will be mailed to the new address of record(37 CFR 1.33).

IRVIN DINGLE
OP (571) 272-3210

FORMER ATTORNEY/AGENT COPY

UNITED STATES PATENT AND TRADEMARK OFFICE

UNITED STATES DEPARTMENT OF COMMERCE
United States Patent and Trademark Office
Address: COMMISSIONER FOR PATENTS
P.O. Box 1450
Alexandria, Virginia 22313-1450
www.uspto.gov

MEYERTONS, HOOD, KIVLIN, KOWERT & GOETZEL, P.C.
P.O. BOX 398
AUSTIN, TX 78767-0398

Mail Date: 04/20/2010

Applicant	: Robert E. Hollingsworth	: DECISION ON REQUEST FOR
Patent Number	: 7627464	: RECALCULATION of PATENT
Issue Date	: 12/01/2009	: TERM ADJUSTMENT IN VIEW
Appliction No	: 10/125,697	: OF WYETH AND NOTICE OF INTENT TO
Filed	: 04/18/2002	: ISSUE CERTIFICATE OF CORRECTION
		:

The Request for Recalculation is **GRANTED** to the extent indicated.

The patent term adjustment has been determined to be **2263** days. The USPTO will *sua sponte* issue a certificate of correction reflecting the amount of PTA days determined by the recalculation.

Prior to the issuance of the certificate of correction, the USPTO will afford patentee an opportunity to be heard and request reconsideration. Accordingly, patentee has **one month or thirty (30) days**, whichever is longer, to file a request for reconsideration of this patent term adjustment calculation. See 35 U.S.C. 154(b)(3)(B)(ii) and 37 CFR 1.322(a)(4). No extensions of time will be granted under 37 CFR 1.136.

Patentee should use document code PET.OP if electronically filing a request for reconsideration of this patent term adjustment calculation. The patentee must also include the information required by 37 CFR 1.705(b)(2) and the fee required by 37 CFR 1.18(e). If patentee does not file a timely request for reconsideration of this patent term adjustment calculation including the information required by 37 CFR 1.705(b)(2) and the fee required by 37 CFR 1.18(e), the USPTO will issue a certificate of correction reflecting the PTA determination noted above.

Patentee should be aware that in order to preserve the right to review in the United States District Court for the District of Columbia of the USPTO patent term adjustment determination, patentee must ensure that he or she also take the steps required under 35 U.S.C. 154(b)(4)(A) in a timely manner. Nothing in the request for recalculation should be construed as providing an alternative time frame for commencing a civil action under 35 U.S.C. 154(b)(4)(A).

Any questions concerning this decision should be directed to the Office of Patent Legal Administration at 571-272-7702.

UNITED STATES PATENT AND TRADEMARK OFFICE

Commissioner for Patents
United States Patent and Trademark Office
P.O. Box 1450
Alexandria, VA 22313-1450
www.uspto.gov

JUN 15 2006

HELLER EHRMAN LLP
275 MIDDLEFIELD ROAD
MENLO PARK, CA 94025

In re Application of	:
Kevin P. Baker et al	:
Serial No.: 10/125,704	: DECISION ON PETITION
Filed: April 17, 2002	:
Attorney Docket No.: 39780-3330R1C58	:

This letter is in response to the Petition under 37 C.F.R. 1.181, filed March 24, 2006 requesting (1) that the rejections containing the six new references which have been used by the examiner in the Examiner's Answer be designated as new grounds of rejection; (2) that the examiner provide a corrected Examiner's Answer which identifies the rejections as new grounds of rejection; and (3) that prosecution be reopened because of these new grounds of rejection.

BACKGROUND

On April 6, 2005, the examiner mailed a Final Office action to applicants, setting a three month shortened statutory period for reply. In the Office action claims 72-76 were rejected under 35 U.S.C. 101 as lacking a substantial credible utility and lack of enablement; under 35 U.S.C. 112, first paragraph, for the same reasons; and under 35 U.S.C. 103(a) as unpatentable over Allen et al in view of Hopp et al and Hoogerboom et al or Ladner et al. The affidavits provided were also discussed as non-persuasive.

Applicants filed an argument after final rejection on June 1, 2005, extensively arguing the rejections of record. The examiner in an Advisory Action mailed June 14, 2005, indicated entry thereof, but that the arguments were unpersuasive. Applicants filed a Notice of Appeal on September 2, 2005, and an Appeal Brief on November 2, 2005.

The examiner prepared and mailed to applicants an Examiner's Answer on January 27, 2006. In the Answer the examiner withdrew the rejection under 35 U.S.C. 103(a), but maintained the other rejections.

Applicants filed this petition on March 24, 2006, asking that the Examiner's Answer be designated as having a new ground of rejection therein. Applicants filed concurrently a Reply Brief directed to the new grounds of rejection.

DISCUSSION

In the Examiner's Answer the examiner relied extensively on six new references in order to support the lack of utility and lack of enablement rejections set forth in the Final Office action. These new references are:

Saito-Hisaminato et al, 2002, DNA Res. 9:35-45;
Bustin, 2002, TRENDS in Molec. Med. 8(6):269-272;
Anderson et al, 1997, Electrophoresis 18:533-537;
Kawamoto et al, 1996, Mol. Cell. Biol. 174:151-158;
Lian et al, 2001. Blood 98:513-524; and
Fessler et al, 2002, J. Biol. Chem. 277:31291-31302.

The statutory basis of the rejections (35 U.S.C. 101 and 112, first paragraph) in the Examiner's Answer did not change from the FINAL Office action mailed to applicants on April 6, 2005. However, it is clear that the examiner used the additional six new references to reinforce these rejections and rebut more thoroughly applicants' arguments. The Answer did not designate the arguments based on these new references as a new ground of rejection. It is also noted that an Answer containing a new ground of rejection must be concurred in and signed by a Group Director. This was not done in this instance.

Applicants have responded to these new arguments and new references raised by the examiner in the Examiner's Answer in their Reply Brief. However, they argue that they have been placed at a disadvantage because they are limited in their ability to present substantive evidence of their own in response to these new references and arguments without reopening of prosecution being granted.

Applicants' points of argument are well taken and are addressed by the decision below.

DECISION

For the above reasons, the petition under 37 C.F.R. 1.181 requesting (1) that the rejections containing the six new references which have been used in the Examiner's Answer be designated as new grounds of rejection; (2) that the Examiner provide a corrected Examiner's Answer which identifies the rejections as new grounds of rejections; and (3) that the FINALITY be withdrawn and that prosecution be reopened because of these new grounds of rejection are **GRANTED-IN-PART.**

Applicants' first request that the rejections in the Examiner's Answer be designated "new grounds of rejection" is **GRANTED**.

Applicants' second request has been effectively granted by this Decision on Petition designating the rejections in the Examiner's Answer to be "new grounds of rejection." The further request for the corrected Examiner's Answer is deemed moot in view of the above Decision and is therefore, **DISMISSED**.

Applicants' third request to have the FINALITY of the application withdrawn and prosecution reopened is **GRANTED** as this is a proper request under the Rules of Prosecution when a new ground of rejection is advanced in an Examiner's Answer. (Alternatively, applicants may rely solely on their Reply Brief and proceed to the Board.)

In view of applicants' expressed limited ability to present new evidence, as noted above, applicants are given TWO MONTHS from the mailing date of this Decision within which to submit any additional arguments, exhibits, affidavits or other evidence which they consider necessary in order to rebut the examiner's new grounds of rejection set forth in the Examiner's Answer. Failure to make any submission will be taken as applicants' agreement to rely solely on the already submitted Reply Brief

This application is being returned to the examiner for consideration of the Reply Brief which will be treated as a reply to new "Non-Final" rejections set forth in the Examiner's Answer and further action not inconsistent with this decision.

There is no fee for this petition and the petition fee paid of $130.00 will be credited to applicants' Deposit Account No. 08-1641, as directed.

Should there by any questions regarding this decision, please contact Special Program Examiner, William R. Dixon, Jr. by letter addressed to Director, TC 1600, at the address listed above, or by telephone at 571-272-0519 or by facsimile sent to the general Office facsimile number, 571-273-8300.

John L. LeGuyader
Director, Technology Center 1600

UNITED STATES PATENT AND TRADEMARK OFFICE

Commissioner for Patents
United States Patent and Trademark Office
P.O. Box 1450
Alexandria, VA 22313-1450
www.uspto.go

GREER, BURNS & CRAIN, LTD.
SUITE 2500
300 SOUTH WACKER DRIVE
CHICAGO, IL 60606

COPY MAILED

JUL 1 6 2004

OFFICE OF PETITIONS

In re Application of	:	
Kim et al.	:	
Application No. 10/125,736	:	ON PETITION
Filed: April 18, 2002	:	
Attorney Docket No. 1201.65186	:	

This is a notice regarding your request for acceptance of a fee deficiency submission under 37 CFR 1.28. On September 1, 1998, the Court of Appeals for the Federal Circuit held that 37 CFR 1.28(c) is the sole provision governing the time for correction of the erroneous payment of the issue fee as a small entity. **See DH Technology v. Synergystex International, Inc. 154 F.3d 1333, 47 USPQ2d 1865 (Fed. Cir. Sept. 1, 1998).**

The Office no longer investigates or rejects original or reissue applications under 37 CFR 1.56. **1098 Off. Gaz. Pat. Office 502 (January 3, 1989)**. Therefore, nothing in this Notice is intended to imply that an investigation was done.

Your fee deficiency submission under 37 CFR 1.28 is hereby **ACCEPTED**.

Inquiries related to this communication should be directed to Paralegal Liana Chase at (703) 306-0482.

This matter is being forwarded to the Publishing Division for processing into a patent.

Frances Hicks
Petitions Examiner
Office of Petitions
Office of the Deputy Commissioner
for Patent Examination Policy

UNITED STATES PATENT AND TRADEMARK OFFICE

#8

COMMISSIONER FOR PATENTS
UNITED STATES PATENT AND TRADEMARK OFFICE
P.O. BOX 1450
ALEXANDRIA, VA 22313-1450
www.uspto.gov

CHRISTIAN D. ABEL
ONSAGERS AS
POSTBOKS 6963 ST. OLAVS PLASS
NORWAY N-013-0 NORWAY

MAILED

NOV 03 2003

Office of the Director
Group 3600

In re Application of
Robert Martinsen et al.
Application No. 10/125,739
Filed: April 19,2002
For: FISHING DEVICE

: DECISION ON PETITION
: TO WITHDRAW THE
: HOLDING OF ABANDONMENT

This is in response to applicant's communication filed in the United States Patent and Trademark Office on August 4, 2003, which will be treated as a petition to withdraw the holding of abandonment.

The petition is **DISMISSED**.

A review of the file record indicates that an Office action was mailed to applicant on November 29, 2002 wherein a three-month shortened statutory period for response was set. Since no timely response to the November 29, 2002 Office action was received and the six-month statutory time period for reply has expired, the application was abandoned.

Petitioner states that a response was filed on May 28, 2003 via facsimile. The copy of the response submitted with the petition includes a Certificate of Transmission dated May 28, 2003.

Any petition to withdraw the holding of abandonment based upon a Certificate of Transmission must include the following requirements:

(1) A copy of a response bearing a signed Certificate of Transmission which includes the date of signing; and

(2) A statement attesting to the personal knowledge of transmitting the response on the date indicated on the Certificate of Transmission (see 37 CFR 1.8 and MPEP 512).

The petition fails to include a statement under 37 CFR 1.8(b)(3) attesting to the personal knowledge of mailing the response on the date indicated on the certificate, by the person who signed the certificate, in this case, Christian D. Abel.

Any request for reconsideration of this decision must be submitted within TWO (2) MONTHS from the mail date of this decision. Extensions of time under 37 CFR 1.136(b) are permitted. The reconsideration request should include a cover letter entitled "Renewed Petition to Withdraw the Holding of Abandonment Under 37 CFR 1.81."

Kenneth J. Dorner
Special Programs Examiner
Technology Center 3600
(703) 308-0866

KJD/ekn 10/29/03

UNITED STATES PATENT AND TRADEMARK OFFICE

Commissioner for Patents
United States Patent and Trademark Office
P.O. Box 1450
Alexandria, VA 22313-1450
www.uspto.gov

JJGJR.: 02-06

Paper No:10

COPY MAILED

FEB 1 6 2006

OFFICE OF PETITIONS

CHRISTIAN D. ABEL
ONSAGERS AS
POSTBOKS 6963 ST. OLAVS PLASS
NORWAY –013-0 NO
NORWAY

In re Application of	:	
Martinsen, et al.	:	DECISION
Application No. 10/125,739	:	
Filing Date: 19 April, 2002	:	
Attorney Docket No.: 410401	:	

This is a revised decision on the petition filed on 24 October, 2005, requesting withdrawal of the holding of abandonment under 37 C.F.R. §1.181, alternatively alleging unavoidable delay under 37 C.F.R. §1.137(a) and unintentional delay under 37 C.F.R. §1.137(b).

For the reasons set forth below:

- the petition as considered under 37 C.F.R. §1.181 is **DISMISSED**;
- the petition under 37 C.F.R. §1.137(a) is **GRANTED** and the petition fee ($250.00) and the extension of time fee ($510.00) are charged as authorized to Deposit Account 50-1898; and
- the petition under 37 C.F.R. §1.137(b) is **DISMISSED as moot** and the petition fee ($750.00) previously charged in error is refunded.

BACKGROUND

The record reflects that:

- Petitioner failed to reply timely and properly to a non-final Office action mailed on 29 November, 2002, with reply due absent extension of time on or before Monday, 3 March, 2003;
- the application went abandoned after midnight 1 March, 2003;
- the Office mailed the Notice of Abandonment on 3 July, 2003;
- on 4 August, 2003, Petitioner filed a request to withdraw the holding of abandonment, which was dismissed on 3 November, 2003, for failure to satisfy the showing requirements under the regulation, however, Petitioner may not to have received timely that decision;
- Petitioner has renewed his request for withdrawal of the holding of abandonment and has pleaded in the alternative for relief under 37 C.F.R. §1.137(a) or §1.137(b), and has made a statement that he has first-hand knowledge of the effort to transmit the required reply timely via FAX, and he has presented the copy of the reply transmittal with request and fee authorization for an extension of time) and that document bears a signed and dated (28 May, 2003) certificate under 37 C.F.R. §1.8 as to FAX transmission.

STATUTES, REGULATIONS AND ANALYSIS

Congress has authorized the Commissioner to "revive an application if the delay is shown to the satisfaction of the Commissioner to have been "unavoidable." 35 U.S.C. §133 (1994).[1]

The regulations at 37 C.F.R. §1.137(a) and (b) set forth the requirements for a petitioner to revive a previously unavoidably or unintentionally, respectively, abandoned application under this congressional grant of authority. The language of 35 U.S.C. §133 and 37 C.F.R. §1.137(a) is clear, unambiguous, and without qualification: the delay in tendering the reply to the outstanding Office action, as well as filing the first petition seeking revival, must have been unavoidable for the reply now to be accepted on petition.[2]

---

[1] 35 U.S.C. §133 provides:
35 U.S.C. §133 Time for prosecuting application.
Upon failure of the applicant to prosecute the application within six months after any action therein, of which notice has been given or mailed to the applicant, or within such shorter time, not less than thirty days, as fixed by the Commissioner in such action, the application shall be regarded as abandoned by the parties thereto, unless it be shown to the satisfaction of the Commissioner that such delay was unavoidable.

[2] Therefore, by example, an unavoidable delay in the payment of the Filing Fee might occur if a reply is shipped by the US Postal Service, but due to catastrophic accident, the delivery is not made.

Delays in responding properly raise the question whether delays are unavoidable.[3] Where there is a question whether the delay was unavoidable, Petitioners must meet the burden of establishing that the delay was unavoidable within the meaning of 35 U.S.C. §133 and 37 C.F.R. §1.137(a).[4] And the Petitioner must be diligent in attending to the matter.[5] Failure to do so does not constitute the care required under Pratt, and so cannot satisfy the test for diligence and due care.

(By contrast, unintentional delays are those that do not satisfy the very strict statutory and regulatory requirements of unavoidable delay, and also, by definition, are not intentional.[6]))

Allegations as to the Request to
Withdraw the Holding of Abandonment

The courts have determined the construct for properly supporting a petition seeking withdrawal of a holding of abandonment.[7]

Petitioner has not satisfied the Delgar requirements.

As to Allegations
of Unavoidable Delay

The requirements for a grantable petition under 37 C.F.R. §1.137(a) are the petition and fee, a showing of unavoidable delay, a proper reply, and–where appropriate--a terminal disclaimer and fee if the application was filed before 8 June, 1995.

Petitioner has satisfied the regulatory requirements as to a petition under 37 C.F.R. §1.137(a).

---

[3] See: *Changes to Patent Practice and Procedure*; *Final Rule Notice*, 62 *Fed. Reg.* at 53158-59 (October 10, 1997), 1203 *Off. Gaz. Pat. Office* at 86-87 (October 21, 1997).

[4] See: In re Application of G, 11 USPQ2d 1378, 1380 (Comm'r Pats. 1989).

[5] See: Diligence in Filing Petitions to Revive and Petitions to Withdraw the Holding of Abandonment, 1124 Off. Gaz. Pat. Office 33 (March 19, 1991). It was and is Petitioner's burden to exercise diligence in seeking either to have the holding of abandonment withdrawn or the application revived. See 1124 Off. Gaz. Pat. Office supra.

[6] Therefore, by example, an unintentional delay in the reply might occur if the reply and transmittal form are to be prepared for shipment by the US Postal Service, but other pressing matters distract one's attention and the mail is not timely deposited for shipment.

[7] See: Delgar v. Schulyer, 172 USPQ 513 (D.D.C. 1971).

As to Allegations
of Unintentional Delay

The requirements for a grantable petition under 37 C.F.R. §1.137(b) are the petition and fee, a showing of unintentional delay, a proper reply, and–where appropriate--a terminal disclaimer and fee if the application was filed before 8 June, 1995.

The petition is moot.

CONCLUSION

Petitioner has not satisfied the burdens set forth in Delgar v. Schulyer, and so the petition as considered under 37 C.F.R. §1.181 hereby is **dismissed**.

The petition under 37 C.F.R. §1.137(a) is **granted**; and the petition under 37 C.F.R. §1.137(b) is **dismissed as moot**.

The instant application is forwarded to Technology Center 3600 for further processing in due course.

Telephone inquiries concerning this decision may be directed to the undersigned at (571) 272-3214.

John J. Gillon, Jr.
Senior Attorney
Office of Petitions

UNITED STATES PATENT AND TRADEMARK OFFICE

COMMISSIONER FOR PATENT
UNITED STATES PATENT AND TRADEMARK OFFIC
P.O. BOX 1450
ALEXANDRIA, VA 22313-1450
www.uspto.go

MAIL

JAN 2 5 2005

DIRECTOR OFFICE
TECHNOLOGY CENTER 2600

Kris Fredrick
HONEYWELL Inc., Law Department
MN-65-3500
3660 Technology Drive
Minneapolis, MN 55418

In re Application of
Michael J. JOHNSON
Application No. 10/125,747
Filed: November 23, 2004
For: **METHOD AND APPARATUS FOR DISPLAYING IMAGES ON A DISPLAY**

DECISION ON PETITION
TO WITHDRAW HOLDING OF
ABANDONMENT

This is a decision on the Petition for a New Start of Mailing Date for an Office Action, filed November 23, 2004. The petition is being treated as a petition to withdraw holding of abandonment.

This application was held abandoned for failure to timely file a response to the non-final Office action mailed February 26, 2004. A Notice of Abandonment was mailed October 6, 2004.

A review of the record indicates that a correspondence address (as indicated above) was included on the Declaration and Power of Attorney filed April 18, 2002. The Office action was mistakenly mailed to a previous correspondence address resulting in an irregularity in mailing.

In view of the above stated reasons the Notice of Abandonment is vacated and the holding of abandonment is withdrawn.

The petition is **GRANTED**.

The application file will be forwarded to the Technology Center's technical support staff for re-mailing the non-final Office action originally mailed February 26, 2004 to the proper correspondence of record. The period for response will be re-started to begin on the mailing thereof.

Kenneth A. Wieder
Special Program Examiner
Technology Center 2600
Communications

10/125751

Cofc

OIPE IAP21
NOV 19 2007
PATENT & TRADEMARK OFFICE

Okay to enter all changes.
/Joseph Woitach/
04/29/2008

PATENT

IN THE UNITED STATES PATENT AND TRADEMARK OFFICE

Inventor(s): Fallaux et al.

Patent No.: 7,105,346 B2

Issued: September 12, 2006

For: PACKAGING SYSTEMS FOR HUMAN RECOMBINANT ADENOVIRUS TO BE USED IN GENE THERAPY

Attorney Docket No.: 2578-3833.7US

CERTIFICATE OF MAILING

I hereby certify that this correspondence along with any attachments referred to or identified as being attached or enclosed is being deposited with the United States Postal Service as First Class Mail on the date of deposit shown below with sufficient postage and in an envelope addressed to the Commissioner for Patents, P.O. Box 1450, Alexandria, VA 22313-1450.

November 15, 2007
Date

ABlackburn
Signature

Aubry Blackburn
Name (Type/Print)

REQUEST FOR CERTIFICATE OF CORRECTION OF PATENT OFFICE MISTAKES (37 C.F.R. § 1.322)

Attn.: Certificate of Corrections Branch
Commissioner for Patents
P.O. Box 1450
Alexandria, VA 22313-1450

Certificate
NOV 23 2007
of Correction

Sir:

It is noted that several errors appear in this patent of a typographical nature. These errors are due to mistakes in printing on the part of the U.S. Patent and Trademark Office, and occurred through no fault of the Applicants. A certificate of correction in the form attached hereto is requested.

Please send the Certificate to:

Name: Allen C. Turner
Address: TraskBritt
P.O. Box 2550
Salt Lake City, Utah 84110

NOV 29 2007

Attached hereto is Form PTO/SB/44, which is suitable for printing.

Respectfully submitted,

Allen C. Turner
Registration No. 33,041
Attorney for Applicant(s)
TRASKBRITT
P.O. Box 2550
Salt Lake City, Utah 84110-2550
Telephone: 801-532-1922

Date: November 8, 2007
ACT/csw

Attachments: PTO/SB/44

Document in ProLaw

NOV 29 2007

PTO/SB/44 (09-07)
Approved for use through 08/31/2010. OMB 0651-0033
U.S. Patent and Trademark Office; U.S. DEPARTMENT OF COMMERCE
Under the Paperwork Reduction Act of 1995, no persons are required to respond to a collection of information unless it displays a valid OMB control number.
(Also Form PTO-1050)

UNITED STATES PATENT AND TRADEMARK OFFICE
CERTIFICATE OF CORRECTION

PATENT NO : 7,105,346 B2
APPLICATION NO. : 10/125,751
ISSUE DATE : September 12, 2006
INVENTOR(S) : Frits J. Fallaux, Robert C. Hoeben, Alex Jan van der Eb, Abraham Bout, and Domenico Valerio

It is certified that an error appears or errors appear in the above-identified patent and that said Letters Patent is hereby corrected as shown below:

On the title page:

In ITEM (60) "**Related U.S. Application Data,**"

5th line,	after "08/793,170," insert --now Pat. No. 5,994,128,--
6th-7th lines,	change "1996, now Pat. No. 5,994,128." to --1996.--

In ITEM (56) "**References Cited,** OTHER PUBLICATIONS,"

Page 3,	1st column,	27th line,	change "#Broough" to --#Brough--
Page 3,	2nd column,	5th line,	change "drived" to --derived--
Page 3,	2nd column,	21st line,	change "Stock" to --Stocks--
Page 3,	2nd column,	55th line,	change "#Vamjaesebrpecl. Bart. et el.," to --#Vanhaesebroeck, Bart, et al.,--
Page 3,	2nd column,	59th line,	change "#Vox et al.," to --#Vos et al.,--
Page 3,	2nd column,	69th line,	change "adenovirus" to --adenoviruses--
Page 4,	1st column,	2nd line,	change "293-Dervied" to --293-Derived--
Page 4,	1st column,	25th line,	change "pess, to --Press,--
Page 4,	1st column,	28th line,	change "portein" to --protein--
Page 4,	1st column,	35th line,	change "type 5)." to --type 5), Jan. 26, 2005.--
Page 4,	1st column,	48th line,	change "at 9 A" to --at 2-9 Å--
Page 4,	1st column,	51st line,	change "PentonBase" to --Penton Base--
Page 4,	1st column,	57th line,	change "Firbotropism" to --Fibrotropism--
Page 4,	1st column,	58th line,	change "Subitutions" to --Substitutions--

MAILING ADDRESS OF SENDER (Please do not use customer number below):

Allen C. Turner
TRASKBRITT
230 South 500 East, Suite 300
Salt Lake City, Utah 84102 USA

NOV 29 2007

This collection of information is required by 37 CFR 1.322, 1.323, and 1.324. The information is required to obtain or retain a benefit by the public which is to file (and by the USPTO to process) an application. Confidentiality is governed by 35 U.S.C. 122 and 37 CFR 1.14. This collection is estimated to take 1.0 hour to complete, including gathering, preparing, and submitting the completed application form to the USPTO. Time will vary depending upon the individual case. Any comments on the amount of time you require to complete this form and/or suggestions for reducing this burden, should be sent to the Chief Information Officer, U.S. Patent and Trademark Office, U.S. Department of Commerce, P.O. Box 1450, Alexandria, VA 22313-1450. DO NOT SEND FEES OR COMPLETED FORMS TO THIS ADDRESS.
SEND TO: Attention Certificate of Corrections Branch, Commissioner for Patents, P.O. Box 1450, Alexandria, VA 22313-1450.

If you need assistance in completing the form, call 1-800-PTO-9199 and select option 2.

PTO/SB/44 (09-07)
Approved for use through 08/31/2010. OMB 0651-0033
U.S. Patent and Trademark Office; U.S. DEPARTMENT OF COMMERCE
Under the Paperwork Reduction Act of 1995, no persons are required to respond to a collection of information unless it displays a valid OMB control number.
(Also Form PTO-1050)

UNITED STATES PATENT AND TRADEMARK OFFICE
CERTIFICATE OF CORRECTION

PATENT NO : 7,105,346 B2
APPLICATION NO. : 10/125,751
ISSUE DATE : September 12, 2006
INVENTOR(S) : Frits J. Fallaux, Robert C. Hoeben, Alex Jan van der Eb, Abraham Bout, and Domenico Valerio

It is certified that an error appears or errors appear in the above-identified patent and that said Letters Patent is hereby corrected as shown below:

On the title page:
In ITEM (56) "**References Cited,**
OTHER PUBLICATIONS," continued

Page 4,	2nd column,	2nd line,	change "pp. 90-101." to --pp. 90-100.--
Page 4,	2nd column,	4th line,	change "Serotype2 Fibre," " to --Serotype 2 Fibre,"--
Page 4,	2nd column,	12th line,	change "antibodyenvelope" to --antibody-envelope-- and change "1, 292-299" to --1, (5):292-299--
Page 4,	2nd column,	23rd line,	change "location" to --Location--
Page 4,	2nd column,	24th line,	change "SerotypeSpecific" to --Serotype-Specific--
Page 4,	2nd column,	26th line,	change "Cromptoon" to --Crompton--
Page 4,	2nd column,	31st line,	change "DNAPolylysine" to --DNA Polylysine--
Page 4,	2nd column,	32nd line,	change "3, 147-154" to --3, (2):147-154--
Page 4,	2nd column,	33rd line,	change "oftransferring-polylysine-" to --of transferring polylysine- --
Page 4,	2nd column,	40th line,	change "Virusinfected" to --Virus-infected--
Page 4,	2nd column,	41st line,	change "Candiate" to --Candidate--
Page 4,	2nd column,	52nd line,	change "et al.:" to --et al.,--
Page 4,	2nd column,	53rd line,	change "tropismmodified" to --tropism-modified--
Page 4,	2nd column,	56th line,	change " " Regenerating" to --"Regenerating--
Page 4,	2nd column,	64th line,	change "on th" to --on the--
Page 4,	2nd column,	65th line,	change "cellvirus" to --cell virus--
Page 4,	2nd column,	67th line,	change "Mde by" to --Made by--

MAILING ADDRESS OF SENDER (Please do not use customer number below):

Allen C. Turner
TRASKBRITT
230 South 500 East, Suite 300
Salt Lake City, Utah 84102 USA

NOV 29 2007

This collection of information is required by 37 CFR 1.322, 1.323, and 1.324. The information is required to obtain or retain a benefit by the public which is to file (and by the USPTO to process) an application. Confidentiality is governed by 35 U.S.C. 122 and 37 CFR 1.14. This collection is estimated to take 1.0 hour to complete, including gathering, preparing, and submitting the completed application form to the USPTO. Time will vary depending upon the individual case. Any comments on the amount of time you require to complete this form and/or suggestions for reducing this burden, should be sent to the Chief Information Officer, U.S. Patent and Trademark Office, U.S. Department of Commerce, P.O. Box 1450, Alexandria, VA 22313-1450. DO NOT SEND FEES OR COMPLETED FORMS TO THIS ADDRESS.
SEND TO: Attention Certificate of Corrections Branch, Commissioner for Patents, P.O. Box 1450, Alexandria, VA 22313-1450.

If you need assistance in completing the form, call 1-800-PTO-9199 and select option 2.

PTO/SB/44 (09-07)
Approved for use through 08/31/2010. OMB 0651-0033
U.S. Patent and Trademark Office; U.S. DEPARTMENT OF COMMERCE
Under the Paperwork Reduction Act of 1995, no persons are required to respond to a collection of information unless it displays a valid OMB control number.
(Also Form PTO-1050)

UNITED STATES PATENT AND TRADEMARK OFFICE
CERTIFICATE OF CORRECTION

PATENT NO : 7,105,346 B2
APPLICATION NO. : 10/125,751
ISSUE DATE : September 12, 2006
INVENTOR(S) : Frits J. Fallaux, Robert C. Hoeben, Alex Jan van der Eb, Abraham Bout, and Domenico Valerio

It is certified that an error appears or errors appear in the above-identified patent and that said Letters Patent is hereby corrected as shown below:

On the title page:
In ITEM (56) "**References Cited,**
OTHER PUBLICATIONS," continued

Page 4,	2nd column,	68th line,	change "Journal 6 Virology," to --Journal of Virology,--
Page 4,	2nd column,	70th line,	change "Flomenbert" to --Flomenberg--
Page 5,	1st column,	18th line,	change "cross: sheet" to --cross-β sheet
Page 5,	1st column,	30th line,	change "adenovirus," " to --adenoviruses,--
Page 5,	1st column,	49th line,	change "y3 and y5" to --αvβ3 and αvβ5--
Page 5,	1st column,	50th line,	change "TLymphocytes" to --T Lymphocytes-- and change "Adenovirus Mediated" to --Adenovirus-Mediated--
Page 5,	1st column,	52nd line,	change "viral" to --Viral--
Page 5,	1st column,	54th line,	change "Dna" to --DNA--
Page 5,	1st column,	63rd-64th lines,	change "adenovirusmediated" to --adenovirus-mediated-- and change "myocytes*in vitro*" to --myocytes *in vitro*--
Page 5,	1st column,	69th line,	change "Typespecific" to --Type-specific--
Page 5,	1st column,	73rd line,	change "LeucineAspartic" to --Leucine-Aspartic--
Page 5,	2nd column,	6th line,	change "Vectormediated" to --Vector-mediated--
Page 5,	2nd column,	9th line,	change "E1, E3" to --E1⁻, E3⁻--
Page 5,	2nd column,	13th line,	change "gnes in vitro and invivo," " to --genes in vitro and in vivo,"--
Page 5,	2nd column,	19th line,	change "(2003 10, 93540." to --(2003) 10, 935-940.--
Page 5,	2nd column,	20th line,	change "Immunotherapy B An" to --Immunotherapy: An--

MAILING ADDRESS OF SENDER (Please do not use customer number below):

Allen C. Turner
TRASKBRITT
230 South 500 East, Suite 300
Salt Lake City, Utah 84102 USA

NOV 29 2007

This collection of information is required by 37 CFR 1.322, 1.323, and 1.324. The information is required to obtain or retain a benefit by the public which is to file (and by the USPTO to process) an application. Confidentiality is governed by 35 U.S.C. 122 and 37 CFR 1.14. This collection is estimated to take 1.0 hour to complete, including gathering, preparing, and submitting the completed application form to the USPTO. Time will vary depending upon the individual case. Any comments on the amount of time you require to complete this form and/or suggestions for reducing this burden, should be sent to the Chief Information Officer, U.S. Patent and Trademark Office, U.S. Department of Commerce, P.O. Box 1450, Alexandria, VA 22313-1450. DO NOT SEND FEES OR COMPLETED FORMS TO THIS ADDRESS.
SEND TO: Attention Certificate of Corrections Branch, Commissioner for Patents, P.O. Box 1450, Alexandria, VA 22313-1450.

If you need assistance in completing the form, call 1-800-PTO-9199 and select option 2.

PTO/SB/44 (09-07)
Approved for use through 08/31/2010. OMB 0651-0033
U.S. Patent and Trademark Office; U.S. DEPARTMENT OF COMMERCE
Under the Paperwork Reduction Act of 1995, no persons are required to respond to a collection of information unless it displays a valid OMB control number.
(Also Form PTO-1050)

UNITED STATES PATENT AND TRADEMARK OFFICE
CERTIFICATE OF CORRECTION

PATENT NO : 7,105,346 B2
APPLICATION NO. : 10/125,751
ISSUE DATE : September 12, 2006
INVENTOR(S) : Frits J. Fallaux, Robert C. Hoeben, Alex Jan van der Eb, Abraham Bout, and Domenico Valerio

It is certified that an error appears or errors appear in the above-identified patent and that said Letters Patent is hereby corrected as shown below:

On the title page:
In ITEM (56) "**References Cited**,
OTHER PUBLICATIONS," continued

Page 5,	2nd column,	26th line,	change "Chaning" to --Changing--
Page 5,	2nd column,	28th line,	change "Use v Integrins" to --Use αv Integrins--
Page 5,	2nd column,	31st line,	change "Recominants," " to --Recombinants."--
Page 5,	2nd column,	40th line,	change "(1995)/" to --(1995).--
Page 5,	2nd column,	42nd line,	change "Conjugatemediated" to --Conjugate-mediated--
Page 5,	2nd column,	52nd line,	change "foraα" to --for α_v --
Page 5,	2nd column,	55th line,	change "inBaculovirus-Expressed" to --in Baculovirus-Expressed--
Page 5,	2nd column,	58th line,	change "TripleStranded-Helical Coiled-Coil," " to --Triple-Stranded Alpha-Helical Coiled-Coil,"--
Page 5,	2nd column,	65th line,	change " "Effecient" to --"Efficient--
Page 5,	2nd column,	69th line,	change "monocyto-" to --monocyte- --
Page 5,	2nd column,	70th line,	change "fibermodified" to --fiber-modified--
Page 5,	2nd column,	71st line,	change "transgeno-encoded" to --transgene-encoded--
Page 6,	1st column,	4th line,	change "114851" to --1148-51--
Page 6,	1st column,	6th line,	change "Proteinfor" to --Protein for--
Page 6,	1st column,	15th line,	change "pp. 1165." to --pp. 1165-1171, 1194.--
Page 6,	1st column,	20th-21st lines,	change "Adenovirusmediated" to --Adenovirus-mediated--
Page 6,	1st column,	22nd line,	change "209219." to --201-219.--

MAILING ADDRESS OF SENDER (Please do not use customer number below):

Allen C. Turner
TRASKBRITT
230 South 500 East, Suite 300
Salt Lake City, Utah 84102 USA

NOV 29 2007

This collection of information is required by 37 CFR 1.322, 1.323, and 1.324. The information is required to obtain or retain a benefit by the public which is to file (and by the USPTO to process) an application. Confidentiality is governed by 35 U.S.C. 122 and 37 CFR 1.14. This collection is estimated to take 1.0 hour to complete, including gathering, preparing, and submitting the completed application form to the USPTO. Time will vary depending upon the individual case. Any comments on the amount of time you require to complete this form and/or suggestions for reducing this burden, should be sent to the Chief Information Officer, U.S. Patent and Trademark Office, U.S. Department of Commerce, P.O. Box 1450, Alexandria, VA 22313-1450. DO NOT SEND FEES OR COMPLETED FORMS TO THIS ADDRESS.
SEND TO: Attention Certificate of Corrections Branch, Commissioner for Patents, P.O. Box 1450, Alexandria, VA 22313-1450.

If you need assistance in completing the form, call 1-800-PTO-9199 and select option 2.

PTO/SB/44 (09-07)
Approved for use through 08/31/2010. OMB 0651-0033
U.S. Patent and Trademark Office; U.S. DEPARTMENT OF COMMERCE
Under the Paperwork Reduction Act of 1995, no persons are required to respond to a collection of information unless it displays a valid OMB control number.
(Also Form PTO-1050)

UNITED STATES PATENT AND TRADEMARK OFFICE
CERTIFICATE OF CORRECTION

PATENT NO : 7,105,346 B2
APPLICATION NO. : 10/125,751
ISSUE DATE : September 12, 2006
INVENTOR(S) : Frits J. Fallaux, Robert C. Hoeben, Alex Jan van der Eb, Abraham Bout, and Domenico Valerio

It is certified that an error appears or errors appear in the above-identified patent and that said Letters Patent is hereby corrected as shown below:

On the title page:
In ITEM (56) "**References Cited**,
OTHER PUBLICATIONS," continued

Page 6,	1st column,	24th line,	change "hematopietic" to --hematopoietic--
Page 6,	1st column,	31st line,	change "Signàas" to --Signäs--
Page 6,	2nd column,	4th line,	change "(199208)," to --(199-208),--
Page 6,	2nd column,	14th line,	change "Immunoogy," to --Immunology,--
Page 6,	2nd column,	15th line,	change "transferring-polylysine/" to --transferrin-polylysine--
Page 6,	2nd column,	21st line,	change "$_{y3}$ and $_{y5}$" to --αvβ3 and αvβ5
Page 6,	2nd column,	22nd line,	change "309319" to --309-319--
Page 6,	2nd column,	23rd line,	change "$_{y5}$" to--αvβ5--
Page 6,	2nd column,	32nd line,	change "964972," to --964-972,--

Insert the following "OTHER PUBLICATIONS":

Peshwa et al., "Cultivation of Mammalian Cells as Aggregates in Bioreactors: Effect of Calcium Concentration on Spatial Distribution of Viability," Biotech. Bioeng., 1993, pp. 179-87, Vol. 41.

Prelich et al., "Functional Characterization of Thermolabile DNA-Binding Proteins That Affect Adenovirus DNA Replication," Journal of Virology, Mar. 1986, pp. 883-92, Vol. 57, No.3.

Rao et al., "The adenovirus E1A proteins induce apoptosis, which is inhibited by the E1B 19-kDa and Bc1-2 proteins," Proc. Natl. Acad. Sci., August 1992, pp. 7742-46, Vol. 89.

Rhim, Johng S., "Development of Human Cell Lines from Multiple Organs," 2000, Annals New York Academy of Sciences, pp. 16-25.

MAILING ADDRESS OF SENDER (Please do not use customer number below):

Allen C. Turner
TRASKBRITT
230 South 500 East, Suite 300
Salt Lake City, Utah 84102 USA

NOV 29 2007

This collection of information is required by 37 CFR 1.322, 1.323, and 1.324. The information is required to obtain or retain a benefit by the public which is to file (and by the USPTO to process) an application. Confidentiality is governed by 35 U.S.C. 122 and 37 CFR 1.14. This collection is estimated to take 1.0 hour to complete, including gathering, preparing, and submitting the completed application form to the USPTO. Time will vary depending upon the individual case. Any comments on the amount of time you require to complete this form and/or suggestions for reducing this burden, should be sent to the Chief Information Officer, U.S. Patent and Trademark Office, U.S. Department of Commerce, P.O. Box 1450, Alexandria, VA 22313-1450. DO NOT SEND FEES OR COMPLETED FORMS TO THIS ADDRESS.
SEND TO: Attention Certificate of Corrections Branch, Commissioner for Patents, P.O. Box 1450, Alexandria, VA 22313-1450.

If you need assistance in completing the form, call 1-800-PTO-9199 and select option 2.

PTO/SB/44 (09-07)
Approved for use through 08/31/2010. OMB 0651-0033
U.S. Patent and Trademark Office; U.S. DEPARTMENT OF COMMERCE
Under the Paperwork Reduction Act of 1995, no persons are required to respond to a collection of information unless it displays a valid OMB control number.
(Also Form PTO-1050)

UNITED STATES PATENT AND TRADEMARK OFFICE
CERTIFICATE OF CORRECTION

PATENT NO : 7,105,346 B2
APPLICATION NO. : 10/125,751
ISSUE DATE : September 12, 2006
INVENTOR(S) : Frits J. Fallaux, Robert C. Hoeben, Alex Jan van der Eb, Abraham Bout, and Domenico Valerio

It is certified that an error appears or errors appear in the above-identified patent and that said Letters Patent is hereby corrected as shown below:

On the title page:
In ITEM (56) "**References Cited,**
OTHER PUBLICATIONS," continued

Rowe et al., "Establishment and Characterization of Hamster Cell Lines Transformed by Restriction Endonuclease Fragments of Adenovirus 5," Journal of Virology, Jan. 1984, pp. 162-70, Vol. 49, No. 1.

Ruley, H. Earl, "Adenovirus early region 1A enables viral and cellular transforming genes to transform primary cells in culture," Nature, August 1983, pp. 602-06, Vol. 304.

Sambrook et al., "Molecular Cloning: A Laboratory Manual," 3rd edition, 2001, Cold Spring Harbor Laboratory Press, Cold Spring Harbor, New York, pp. 16.1-16.6.

White et al., "Adenovirus E1B 19-Kilodalton Protein Overcomes the Cytotoxicity of E1A Proteins," Journal of Virology, June 1991, pp. 2968-78, Vol. 65 No 6.

White et al., "Role of Adenovirus E1B Proteins in Transformation: Altered Organization of Intermediate Filaments in Transformed Cells That Express the 19-Kilodalton Protein," Molecular and Cellular Biology, Jan. 1990, pp. 120-30, Vol. 10, No. 1.

White et al., "Specific disruption of intermediate filaments and the nuclear lamina by the 19-kDa product of the adenovirus E1B oncogene," Proc. Natl. Acad. Sci., December 1989, pp. 9886-90, Vol. 86.

White et al., "The 19-Kilodalton Adenovirus E1B Transforming Protein Inhibits Programmed Cell Death and Prevents Cytolysis by Tumor Necrosis Factor alpha," Molecular and Cellular Biology, June 1992, pp. 2570-80, Vol. 12, No.6.

Woodworth et al., "Transformation of Differentiated Rat Hepatocytes with Adenovirus and Adenovirus DNA," Journal of Virology, Nov. 1987, pp. 3570-79, Vol. 61, No. 11.

MAILING ADDRESS OF SENDER (Please do not use customer number below):

Allen C. Turner
TRASKBRITT
230 South 500 East, Suite 300
Salt Lake City, Utah 84102 USA

NOV 29 2007

This collection of information is required by 37 CFR 1.322, 1.323, and 1.324. The information is required to obtain or retain a benefit by the public which is to file (and by the USPTO to process) an application. Confidentiality is governed by 35 U.S.C. 122 and 37 CFR 1.14. This collection is estimated to take 1.0 hour to complete, including gathering, preparing, and submitting the completed application form to the USPTO. Time will vary depending upon the individual case. Any comments on the amount of time you require to complete this form and/or suggestions for reducing this burden, should be sent to the Chief Information Officer, U.S. Patent and Trademark Office, U.S. Department of Commerce, P.O. Box 1450, Alexandria, VA 22313-1450. DO NOT SEND FEES OR COMPLETED FORMS TO THIS ADDRESS.
SEND TO: Attention Certificate of Corrections Branch, Commissioner for Patents, P.O. Box 1450, Alexandria, VA 22313-1450.

If you need assistance in completing the form, call 1-800-PTO-9199 and select option 2.

PTO/SB/44 (09-07)
Approved for use through 08/31/2010. OMB 0651-0033
U.S. Patent and Trademark Office; U.S. DEPARTMENT OF COMMERCE
Under the Paperwork Reduction Act of 1995, no persons are required to respond to a collection of information unless it displays a valid OMB control number.
(Also Form PTO-1050)

UNITED STATES PATENT AND TRADEMARK OFFICE
CERTIFICATE OF CORRECTION

PATENT NO : 7,105,346 B2
APPLICATION NO. : 10/125,751
ISSUE DATE : September 12, 2006
INVENTOR(S) : Frits J. Fallaux, Robert C. Hoeben, Alex Jan van der Eb, Abraham Bout, and Domenico Valerio

It is certified that an error appears or errors appear in the above-identified patent and that said Letters Patent is hereby corrected as shown below:

In the specification:

COLUMN 2,	LINES 48-49,	change "ransformation." to --transformation.--
COLUMN 6,	LINE 34,	change "PER.C 1," to --PER.C1,--
COLUMN 22,	LINE 52,	change "plCLhac" to --pICLhac--
COLUMN 22,	LINE 61,	change "mungbean" to --mung bean--
COLUMN 24,	LINE 43,	change "PICLhac" to --pICLhac--
COLUMN 25,	LINE 53,	change "HP/cla1" to --HP/c1aI--

MAILING ADDRESS OF SENDER (Please do not use customer number below):

Allen C. Turner
TRASKBRITT
230 South 500 East, Suite 300
Salt Lake City, Utah 84102 USA

29 2007

This collection of information is required by 37 CFR 1.322, 1.323, and 1.324. The information is required to obtain or retain a benefit by the public which is to file (and by the USPTO to process) an application. Confidentiality is governed by 35 U.S.C. 122 and 37 CFR 1.14. This collection is estimated to take 1.0 hour to complete, including gathering, preparing, and submitting the completed application form to the USPTO. Time will vary depending upon the individual case. Any comments on the amount of time you require to complete this form and/or suggestions for reducing this burden, should be sent to the Chief Information Officer, U.S. Patent and Trademark Office, U.S. Department of Commerce, P.O. Box 1450, Alexandria, VA 22313-1450. DO NOT SEND FEES OR COMPLETED FORMS TO THIS ADDRESS.
SEND TO: Attention Certificate of Corrections Branch, Commissioner for Patents, P.O. Box 1450, Alexandria, VA 22313-1450.

If you need assistance in completing the form, call 1-800-PTO-9199 and select option 2.

PTO/SB/44 (09-07)
Approved for use through 08/31/2010. OMB 0651-0033
U.S. Patent and Trademark Office; U.S. DEPARTMENT OF COMMERCE
Under the Paperwork Reduction Act of 1995, no persons are required to respond to a collection of information unless it displays a valid OMB control number.
(Also Form PTO-1050)

UNITED STATES PATENT AND TRADEMARK OFFICE
CERTIFICATE OF CORRECTION

PATENT NO : 7,105,346 B2
APPLICATION NO. : 10/125,751
ISSUE DATE : September 12, 2006
INVENTOR(S) : Frits J. Fallaux, Robert C. Hoeben, Alex Jan van der Eb, Abraham Bout, and Domenico Valerio

It is certified that an error appears or errors appear in the above-identified patent and that said Letters Patent is hereby corrected as shown below:

On the title page:

In ITEM (60) "**Related U.S. Application Data,**"

5th line,	after "08/793,170," insert --now Pat. No. 5,994,128,--
6th-7th lines,	change "1996, now Pat. No. 5,994,128." to --1996.--

In ITEM (56) "**References Cited,** OTHER PUBLICATIONS,"

Page 3,	1st column,	27th line,	change "#Broough" to --#Brough--
Page 3,	2nd column,	5th line,	change "drived" to --derived--
Page 3,	2nd column,	21st line,	change "Stock" to --Stocks--
Page 3,	2nd column,	55th line,	change "#Vamjaesebrpecl. Bart. et el.," to --#Vanhaesebroeck, Bart, et al.,--
Page 3,	2nd column,	59th line,	change "#Vox et al.," to --#Vos et al.,--
Page 3,	2nd column,	69th line,	change "adenovirus" to --adenoviruses--
Page 4,	1st column,	2nd line,	change "293-Dervied" to --293-Derived--
Page 4,	1st column,	25th line,	change "pess, to --Press,--
Page 4,	1st column,	28th line,	change "portein" to --protein--
Page 4,	1st column,	35th line,	change "type 5)." to --type 5), Jan. 26, 2005.--
Page 4,	1st column,	48th line,	change "at 9 A" to --at 2-9 Å--
Page 4,	1st column,	51st line,	change "PentonBase" to --Penton Base--
Page 4,	1st column,	57th line,	change "Firbotropism" to --Fibrotropism--
Page 4,	1st column,	58th line,	change "Subitutions" to --Substitutions--

MAILING ADDRESS OF SENDER (Please do not use customer number below):

Allen C. Turner
TRASKBRITT
230 South 500 East, Suite 300
Salt Lake City, Utah 84102 USA

9 2007

This collection of information is required by 37 CFR 1.322, 1.323, and 1.324. The information is required to obtain or retain a benefit by the public which is to file (and by the USPTO to process) an application. Confidentiality is governed by 35 U.S.C. 122 and 37 CFR 1.14. This collection is estimated to take 1.0 hour to complete, including gathering, preparing, and submitting the completed application form to the USPTO. Time will vary depending upon the individual case. Any comments on the amount of time you require to complete this form and/or suggestions for reducing this burden, should be sent to the Chief Information Officer, U.S. Patent and Trademark Office, U.S. Department of Commerce, P.O. Box 1450, Alexandria, VA 22313-1450. DO NOT SEND FEES OR COMPLETED FORMS TO THIS ADDRESS.
SEND TO: Attention Certificate of Corrections Branch, Commissioner for Patents, P.O. Box 1450, Alexandria, VA 22313-1450.

If you need assistance in completing the form, call 1-800-PTO-9199 and select option 2.

PTO/SB/44 (09-07)
Approved for use through 08/31/2010. OMB 0651-0033
U.S. Patent and Trademark Office; U.S. DEPARTMENT OF COMMERCE
Under the Paperwork Reduction Act of 1995, no persons are required to respond to a collection of information unless it displays a valid OMB control number.
(Also Form PTO-1050)

UNITED STATES PATENT AND TRADEMARK OFFICE
CERTIFICATE OF CORRECTION

PATENT NO : 7,105,346 B2
APPLICATION NO. : 10/125,751
ISSUE DATE : September 12, 2006
INVENTOR(S) : Frits J. Fallaux, Robert C. Hoeben, Alex Jan van der Eb, Abraham Bout, and Domenico Valerio

It is certified that an error appears or errors appear in the above-identified patent and that said Letters Patent is hereby corrected as shown below:

On the title page:
In ITEM (56) "**References Cited,**
OTHER PUBLICATIONS," continued

Page 4,	2nd column,	2nd line,	change "pp. 90-101." to --pp. 90-100.--
Page 4,	2nd column,	4th line,	change "Serotype2 Fibre," " to --Serotype 2 Fibre,"--
Page 4,	2nd column,	12th line,	change "antibodyenvelope" to --antibody-envelope-- and change "1, 292-299" to --1, (5):292-299--
Page 4,	2nd column,	23rd line,	change "location" to --Location--
Page 4,	2nd column,	24th line,	change "SerotypeSpecific" to --Serotype-Specific--
Page 4,	2nd column,	26th line,	change "Cromptoon" to --Crompton--
Page 4,	2nd column,	31st line,	change "DNAPolylysine" to --DNA Polylysine--
Page 4,	2nd column,	32nd line,	change "3, 147-154" to --3, (2):147-154--
Page 4,	2nd column,	33rd line,	change "oftransferring-polylysine-" to --of transferring polylysine- --
Page 4,	2nd column,	40th line,	change "Virusinfected" to --Virus-infected--
Page 4,	2nd column,	41st line,	change "Candiate" to --Candidate--
Page 4,	2nd column,	52nd line,	change "et al.:" to --et al.,--
Page 4,	2nd column,	53rd line,	change "tropismmodified" to --tropism-modified--
Page 4,	2nd column,	56th line,	change " " Regenerating" to --"Regenerating--
Page 4,	2nd column,	64th line,	change "on th" to --on the--
Page 4,	2nd column,	65th line,	change "cellvirus" to --cell virus--
Page 4,	2nd column,	67th line,	change "Mde by" to --Made by--

MAILING ADDRESS OF SENDER (Please do not use customer number below):

Allen C. Turner
TRASKBRITT
230 South 500 East, Suite 300
Salt Lake City, Utah 84102 USA

NOV 29 2007

This collection of information is required by 37 CFR 1.322, 1.323, and 1.324. The information is required to obtain or retain a benefit by the public which is to file (and by the USPTO to process) an application. Confidentiality is governed by 35 U.S.C. 122 and 37 CFR 1.14. This collection is estimated to take 1.0 hour to complete, including gathering, preparing, and submitting the completed application form to the USPTO. Time will vary depending upon the individual case. Any comments on the amount of time you require to complete this form and/or suggestions for reducing this burden, should be sent to the Chief Information Officer, U.S. Patent and Trademark Office, U.S. Department of Commerce, P.O. Box 1450, Alexandria, VA 22313-1450. DO NOT SEND FEES OR COMPLETED FORMS TO THIS ADDRESS.
SEND TO: Attention Certificate of Corrections Branch, Commissioner for Patents, P.O. Box 1450, Alexandria, VA 22313-1450.

If you need assistance in completing the form, call 1-800-PTO-9199 and select option 2.

PTO/SB/44 (09-07)
Approved for use through 08/31/2010. OMB 0651-0033
U.S. Patent and Trademark Office; U.S. DEPARTMENT OF COMMERCE
Under the Paperwork Reduction Act of 1995, no persons are required to respond to a collection of information unless it displays a valid OMB control number.
(Also Form PTO-1050)

UNITED STATES PATENT AND TRADEMARK OFFICE
CERTIFICATE OF CORRECTION

PATENT NO : 7,105,346 B2
APPLICATION NO. : 10/125,751
ISSUE DATE : September 12, 2006
INVENTOR(S) : Frits J. Fallaux, Robert C. Hoeben, Alex Jan van der Eb, Abraham Bout, and Domenico Valerio

It is certified that an error appears or errors appear in the above-identified patent and that said Letters Patent is hereby corrected as shown below:

On the title page:
In ITEM (56) "**References Cited,**
OTHER PUBLICATIONS," continued

Page 4,	2nd column,	68th line,	change "Journal 6 Virology," to --Journal of Virology,--
Page 4,	2nd column,	70th line,	change "Flomenbert" to --Flomenberg--
Page 5,	1st column,	18th line,	change "cross: sheet" to --cross-β sheet
Page 5,	1st column,	30th line,	change "adenovirus," " to --adenoviruses,--
Page 5,	1st column,	49th line,	change "y3 and y5" to --αvβ3 and αvβ5--
Page 5,	1st column,	50th line,	change "TLymphocytes" to --T Lymphocytes-- and change "Adenovirus Mediated" to --Adenovirus-Mediated--
Page 5,	1st column,	52nd line,	change "viral" to --Viral--
Page 5,	1st column,	54th line,	change "Dna" to --DNA--
Page 5,	1st column,	63rd-64th lines,	change "adenovirusmediated" to --adenovirus-mediated-- and change "myocytes*in vitro*" to --myocytes *in vitro*--
Page 5,	1st column,	69th line,	change "Typespecific" to --Type-specific--
Page 5,	1st column,	73rd line,	change "LeucineAspartic" to --Leucine-Aspartic--
Page 5,	2nd column,	6th line,	change "Vectormediated" to --Vector-mediated--
Page 5,	2nd column,	9th line,	change "E1, E3" to --E1⁻, E3⁻--
Page 5,	2nd column,	13th line,	change "gnes in vitro and invivo," " to --genes in vitro and in vivo,"--
Page 5,	2nd column,	19th line,	change "(2003 10, 93540." to --(2003) 10, 935-940.--
Page 5,	2nd column,	20th line,	change "Immunotherapy B An" to --Immunotherapy: An--

MAILING ADDRESS OF SENDER (Please do not use customer number below):

Allen C. Turner
TRASKBRITT
230 South 500 East, Suite 300
Salt Lake City, Utah 84102 USA

NOV 29 2007

This collection of information is required by 37 CFR 1.322, 1.323, and 1.324. The information is required to obtain or retain a benefit by the public which is to file (and by the USPTO to process) an application. Confidentiality is governed by 35 U.S.C. 122 and 37 CFR 1.14. This collection is estimated to take 1.0 hour to complete, including gathering, preparing, and submitting the completed application form to the USPTO. Time will vary depending upon the individual case. Any comments on the amount of time you require to complete this form and/or suggestions for reducing this burden, should be sent to the Chief Information Officer, U.S. Patent and Trademark Office, U.S. Department of Commerce, P.O. Box 1450, Alexandria, VA 22313-1450. DO NOT SEND FEES OR COMPLETED FORMS TO THIS ADDRESS.
SEND TO: Attention Certificate of Corrections Branch, Commissioner for Patents, P.O. Box 1450, Alexandria, VA 22313-1450.

If you need assistance in completing the form, call 1-800-PTO-9199 and select option 2.

PTO/SB/44 (09-07)
Approved for use through 08/31/2010. OMB 0651-0033
U.S. Patent and Trademark Office; U.S. DEPARTMENT OF COMMERCE
Under the Paperwork Reduction Act of 1995, no persons are required to respond to a collection of information unless it displays a valid OMB control number.
(Also Form PTO-1050)

UNITED STATES PATENT AND TRADEMARK OFFICE
CERTIFICATE OF CORRECTION

PATENT NO : 7,105,346 B2
APPLICATION NO. : 10/125,751
ISSUE DATE : September 12, 2006
INVENTOR(S) : Frits J. Fallaux, Robert C. Hoeben, Alex Jan van der Eb, Abraham Bout, and Domenico Valerio

It is certified that an error appears or errors appear in the above-identified patent and that said Letters Patent is hereby corrected as shown below:

On the title page:
In ITEM (56) "**References Cited,**
OTHER PUBLICATIONS," continued

Page 5,	2nd column,	26th line,	change "Chaning" to --Changing--
Page 5,	2nd column,	28th line,	change "Use v Integrins" to --Use αv Integrins--
Page 5,	2nd column,	31st line,	change "Recominants," " to --Recombinants."--
Page 5,	2nd column,	40th line,	change "(1995)/" to --(1995).--
Page 5,	2nd column,	42nd line,	change "Conjugatemediated" to --Conjugate-mediated--
Page 5,	2nd column,	52nd line,	change "foraα" to --for α_v --
Page 5,	2nd column,	55th line,	change "inBaculovirus-Expressed" to --in Baculovirus-Expressed--
Page 5,	2nd column,	58th line,	change "TripleStranded-Helical Coiled-Coil," " to --Triple-Stranded Alpha-Helical Coiled-Coil,"--
Page 5,	2nd column,	65th line,	change " "Effecient" to --"Efficient--
Page 5,	2nd column,	69th line,	change "monocyto-" to --monocyte- --
Page 5,	2nd column,	70th line,	change "fibermodified" to --fiber-modified--
Page 5,	2nd column,	71st line,	change "transgeno-encoded" to --transgene-encoded--
Page 6,	1st column,	4th line,	change "114851" to --1148-51--
Page 6,	1st column,	6th line,	change "Proteinfor" to --Protein for--
Page 6,	1st column,	15th line,	change "pp. 1165." to --pp. 1165-1171, 1194.--
Page 6,	1st column,	20th-21st lines,	change "Adenovirusmediated" to --Adenovirus-mediated--
Page 6,	1st column,	22nd line,	change "209219." to --201-219.--

MAILING ADDRESS OF SENDER (Please do not use customer number below):

Allen C. Turner
TRASKBRITT
230 South 500 East, Suite 300
Salt Lake City, Utah 84102 USA

NOV 29 2007

This collection of information is required by 37 CFR 1.322, 1.323, and 1.324. The information is required to obtain or retain a benefit by the public which is to file (and by the USPTO to process) an application. Confidentiality is governed by 35 U.S.C. 122 and 37 CFR 1.14. This collection is estimated to take 1.0 hour to complete, including gathering, preparing, and submitting the completed application form to the USPTO. Time will vary depending upon the individual case. Any comments on the amount of time you require to complete this form and/or suggestions for reducing this burden, should be sent to the Chief Information Officer, U.S. Patent and Trademark Office, U.S. Department of Commerce, P.O. Box 1450, Alexandria, VA 22313-1450. DO NOT SEND FEES OR COMPLETED FORMS TO THIS ADDRESS.
SEND TO: Attention Certificate of Corrections Branch, Commissioner for Patents, P.O. Box 1450, Alexandria, VA 22313-1450.

If you need assistance in completing the form, call 1-800-PTO-9199 and select option 2.

PTO/SB/44 (09-07)
Approved for use through 08/31/2010. OMB 0651-0033
U.S. Patent and Trademark Office; U.S. DEPARTMENT OF COMMERCE
Under the Paperwork Reduction Act of 1995, no persons are required to respond to a collection of information unless it displays a valid OMB control number.
(Also Form PTO-1050)

UNITED STATES PATENT AND TRADEMARK OFFICE
CERTIFICATE OF CORRECTION

PATENT NO : 7,105,346 B2
APPLICATION NO. : 10/125,751
ISSUE DATE : September 12, 2006
INVENTOR(S) : Frits J. Fallaux, Robert C. Hoeben, Alex Jan van der Eb, Abraham Bout, and Domenico Valerio

It is certified that an error appears or errors appear in the above-identified patent and that said Letters Patent is hereby corrected as shown below:

On the title page:
In ITEM (56) "**References Cited,**
OTHER PUBLICATIONS," continued

Page 6,	1st column,	24th line,	change "hematopietic" to --hematopoietic--
Page 6,	1st column,	31st line,	change "Signàas" to --Signäs--
Page 6,	2nd column,	4th line,	change "(199208)," to --(199-208),--
Page 6,	2nd column,	14th line,	change "Immunoogy," to --Immunology,--
Page 6,	2nd column,	15th line,	change "transferring-polylysine/" to --transferrin-polylysine--
Page 6,	2nd column,	21st line,	change "$_{y3}$ and $_{y5}$" to --αvβ3 and αvβ5
Page 6,	2nd column,	22nd line,	change "309319" to --309-319--
Page 6,	2nd column,	23rd line,	change "$_{y5}$" to--αvβ5--
Page 6,	2nd column,	32nd line,	change "964972," to --964-972,--

Insert the following "OTHER PUBLICATIONS":

Peshwa et al., "Cultivation of Mammalian Cells as Aggregates in Bioreactors: Effect of Calcium Concentration on Spatial Distribution of Viability," Biotech. Bioeng., 1993, pp. 179-87, Vol. 41.

Prelich et al., "Functional Characterization of Thermolabile DNA-Binding Proteins That Affect Adenovirus DNA Replication," Journal of Virology, Mar. 1986, pp. 883-92, Vol. 57, No.3.

Rao et al., "The adenovirus E1A proteins induce apoptosis, which is inhibited by the E1B 19-kDa and Bcl-2 proteins," Proc. Natl. Acad. Sci., August 1992, pp. 7742-46, Vol. 89.

Rhim, Johng S., "Development of Human Cell Lines from Multiple Organs," 2000, Annals New York Academy of Sciences, pp. 16-25.

MAILING ADDRESS OF SENDER (Please do not use customer number below):

Allen C. Turner
TRASKBRITT
230 South 500 East, Suite 300
Salt Lake City, Utah 84102 USA

NOV 29 2007

This collection of information is required by 37 CFR 1.322, 1.323, and 1.324. The information is required to obtain or retain a benefit by the public which is to file (and by the USPTO to process) an application. Confidentiality is governed by 35 U.S.C. 122 and 37 CFR 1.14. This collection is estimated to take 1.0 hour to complete, including gathering, preparing, and submitting the completed application form to the USPTO. Time will vary depending upon the individual case. Any comments on the amount of time you require to complete this form and/or suggestions for reducing this burden, should be sent to the Chief Information Officer, U.S. Patent and Trademark Office, U.S. Department of Commerce, P.O. Box 1450, Alexandria, VA 22313-1450. DO NOT SEND FEES OR COMPLETED FORMS TO THIS ADDRESS.
SEND TO: Attention Certificate of Corrections Branch, Commissioner for Patents, P.O. Box 1450, Alexandria, VA 22313-1450.

If you need assistance in completing the form, call 1-800-PTO-9199 and select option 2.

PTO/SB/44 (09-07)
Approved for use through 08/31/2010. OMB 0651-0033
U.S. Patent and Trademark Office; U.S. DEPARTMENT OF COMMERCE
Under the Paperwork Reduction Act of 1995, no persons are required to respond to a collection of information unless it displays a valid OMB control number.
(Also Form PTO-1050)

UNITED STATES PATENT AND TRADEMARK OFFICE
CERTIFICATE OF CORRECTION

PATENT NO : 7,105,346 B2
APPLICATION NO. : 10/125,751
ISSUE DATE : September 12, 2006
INVENTOR(S) : Frits J. Fallaux, Robert C. Hoeben, Alex Jan van der Eb, Abraham Bout, and Domenico Valerio

It is certified that an error appears or errors appear in the above-identified patent and that said Letters Patent is hereby corrected as shown below:

On the title page:
In ITEM (56) "**References Cited,**
OTHER PUBLICATIONS," continued

Rowe et al., "Establishment and Characterization of Hamster Cell Lines Transformed by Restriction Endonuclease Fragments of Adenovirus 5," Journal of Virology, Jan. 1984, pp. 162-70, Vol. 49, No. 1.

Ruley, H. Earl, "Adenovirus early region 1A enables viral and cellular transforming genes to transform primary cells in culture," Nature, August 1983, pp. 602-06, Vol. 304.

Sambrook et al., "Molecular Cloning: A Laboratory Manual," 3rd edition, 2001, Cold Spring Harbor Laboratory Press, Cold Spring Harbor, New York, pp. 16.1-16.6.

White et al., "Adenovirus E1B 19-Kilodalton Protein Overcomes the Cytotoxicity of E1A Proteins," Journal of Virology, June 1991, pp. 2968-78, Vol. 65 No 6.

White et al., "Role of Adenovirus E1B Proteins in Transformation: Altered Organization of Intermediate Filaments in Transformed Cells That Express the 19-Kilodalton Protein," Molecular and Cellular Biology, Jan. 1990, pp. 120-30, Vol. 10, No. 1.

White et al., "Specific disruption of intermediate filaments and the nuclear lamina by the 19-kDa product of the adenovirus E1B oncogene," Proc. Natl. Acad. Sci., December 1989, pp. 9886-90, Vol. 86.

White et al., "The 19-Kilodalton Adenovirus E1B Transforming Protein Inhibits Programmed Cell Death and Prevents Cytolysis by Tumor Necrosis Factor alpha," Molecular and Cellular Biology, June 1992, pp. 2570-80, Vol. 12, No.6.

Woodworth et al., "Transformation of Differentiated Rat Hepatocytes with Adenovirus and Adenovirus DNA," Journal of Virology, Nov. 1987, pp. 3570-79, Vol. 61, No. 11.

MAILING ADDRESS OF SENDER (Please do not use customer number below):

Allen C. Turner
TRASKBRITT
230 South 500 East, Suite 300
Salt Lake City, Utah 84102 USA

NOV 29 2007

This collection of information is required by 37 CFR 1.322, 1.323, and 1.324. The information is required to obtain or retain a benefit by the public which is to file (and by the USPTO to process) an application. Confidentiality is governed by 35 U.S.C. 122 and 37 CFR 1.14. This collection is estimated to take 1.0 hour to complete, including gathering, preparing, and submitting the completed application form to the USPTO. Time will vary depending upon the individual case. Any comments on the amount of time you require to complete this form and/or suggestions for reducing this burden, should be sent to the Chief Information Officer, U.S. Patent and Trademark Office, U.S. Department of Commerce, P.O. Box 1450, Alexandria, VA 22313-1450. DO NOT SEND FEES OR COMPLETED FORMS TO THIS ADDRESS.
SEND TO: Attention Certificate of Corrections Branch, Commissioner for Patents, P.O. Box 1450, Alexandria, VA 22313-1450.

If you need assistance in completing the form, call 1-800-PTO-9199 and select option 2.

PTO/SB/44 (09-07)
Approved for use through 08/31/2010. OMB 0651-0033
U.S. Patent and Trademark Office; U.S. DEPARTMENT OF COMMERCE
Under the Paperwork Reduction Act of 1995, no persons are required to respond to a collection of information unless it displays a valid OMB control number.
(Also Form PTO-1050)

UNITED STATES PATENT AND TRADEMARK OFFICE
CERTIFICATE OF CORRECTION

PATENT NO : 7,105,346 B2
APPLICATION NO. : 10/125,751
ISSUE DATE : September 12, 2006
INVENTOR(S) : Frits J. Fallaux, Robert C. Hoeben, Alex Jan van der Eb, Abraham Bout, and Domenico Valerio

It is certified that an error appears or errors appear in the above-identified patent and that said Letters Patent is hereby corrected as shown below:

In the specification:

COLUMN 2, LINES 48-49, change "ransformation." to --transformation.--
COLUMN 6, LINE 34, change "PER.C 1," to --PER.C1,--
COLUMN 22, LINE 52, change "plCLhac" to --pICLhac--
COLUMN 22, LINE 61, change "mungbean" to --mung bean--
COLUMN 24, LINE 43, change "PICLhac" to --pICLhac--
COLUMN 25, LINE 53, change "HP/cla1" to --HP/c1al--

MAILING ADDRESS OF SENDER (Please do not use customer number below):

Allen C. Turner
TRASKBRITT
230 South 500 East, Suite 300
Salt Lake City, Utah 84102 USA

2,9 2007

This collection of information is required by 37 CFR 1.322, 1.323, and 1.324. The information is required to obtain or retain a benefit by the public which is to file (and by the USPTO to process) an application. Confidentiality is governed by 35 U.S.C. 122 and 37 CFR 1.14. This collection is estimated to take 1.0 hour to complete, including gathering, preparing, and submitting the completed application form to the USPTO. Time will vary depending upon the individual case. Any comments on the amount of time you require to complete this form and/or suggestions for reducing this burden, should be sent to the Chief Information Officer, U.S. Patent and Trademark Office, U.S. Department of Commerce, P.O. Box 1450, Alexandria, VA 22313-1450. DO NOT SEND FEES OR COMPLETED FORMS TO THIS ADDRESS.
SEND TO: Attention Certificate of Corrections Branch, Commissioner for Patents, P.O. Box 1450, Alexandria, VA 22313-1450.

If you need assistance in completing the form, call 1-800-PTO-9199 and select option 2.

UNITED STATES PATENT AND TRADEMARK OFFICE

Commissioner for Patents
United States Patent and Trademark Office
P.O. Box 1450
Alexandria, VA 22313-1450
www.uspto.gov

ERICSSON INC.
6300 LEGACY DRIVE
M/S EVR C11
PLANO, TX 75024

COPY MAILED
JUL 2 1 2006
OFFICE OF PETITIONS

In re Application of

Weid, et al.

Application No. 10/125,759

Filed: April 18, 2002

Attorney Docket No. 34645-00539USPT

DECISION ON PETITION

This is a decision on the petition under 37 CFR 1.181(a) to withdraw the holding of abandonment, filed March 5, 2004.

The petition under 37 CFR 1.181(a) to withdraw the holding of abandonment is **granted**.

This application was held abandoned on July 10, 2002, after it was believed that no response was received to the Notice to File Missing Parts of Nonprovisional Application mailed May 9, 2002. The notice allowed a shortened period for reply of two (2) months from its mailing date. Extensions of the time set for reply were available pursuant to 37 CFR 1.136(a). A Notice of Abandonment was mailed on January 16, 2004, indicating that a reply to the Notice to File Missing Parts of Nonprovisional Application was not received.

The instant petition maintains that the response to the Notice to File Missing Parts of Nonprovisional Application was mailed on June 11, 2002. A copy of the response containing a certificate of mailing dated June 11, 2002, accompanied the petition. Ms. Linda McSweeney signed the certificate of mailing. It is noted that a statement of personal knowledge from Ms. McSweeney regarding the mailing of the response did not accompany the petition, but that a copy of the Office date-stamp postcard whereby the Office acknowledged having received the response on June 17, 2002, also accompanied the petition. The abandonment is being withdrawn on the basis of the Office date-stamped postcard receipt.

Based on the aforementioned, it appears that the application was improperly held abandoned as a proper response was received prior to expiration of the period for reply. The holding of abandonment is withdrawn, accordingly.

The application file is being forwarded to the Office of Initial Patent Examination for further processing, including processing of the declaration filed in duplicate in response to the Notice to File Missing Parts of Nonprovisional Application.

Questions regarding this decision may be directed to the undersigned at (571) 272-3222.

Kenya A. McLaughlin
Petitions Attorney
Office of Petitions

UNITED STATES PATENT AND TRADEMARK OFFICE

Commissioner for Patents
United States Patent and Trademark Office
P.O. Box 1450
Alexandria, VA 22313-1450
www.uspto.gov

ERICSSON INC.
6300 LEGACY DRIVE
M/S EVR 1-C-11
PLANO TX 75024

COPY MAILED

MAR 3 1 2008

OFFICE OF PETITIONS

In re Application of	:	
Jean Pierre Von Der WEID et al.	:	
Application No. 10/125,759	:	DECISION ON PETITION
Filed: April 18, 2002	:	
Attorney Docket No. **P14893-US1**	:	

This is a decision on the petition under the unintentional provisions of 37 CFR 1.137(b), filed February 27, 2008, to revive the above-identified application.

The petition is **DISMISSED**.

Any request for reconsideration of this decision must be submitted within TWO (2) MONTHS from the mail date of this decision. Extensions of time under 37 CFR 1.136(a) are permitted. The reconsideration request should include a cover letter entitled "Renewed Petition under 37 CFR 1.137(b)." This is not a final agency action within the meaning of 5 U.S.C. § 704.

The application became abandoned for failure s to timely pay the issue and publication fees on or before February 13, 2008, as required by the Notice of Allowance and Fee(s) Due, mailed November 13, 2007, which set a statutory period for reply of three (3) months. Accordingly, the application became abandoned on February 14, 2007.

A grantable petition under 37 CFR 1.137(b) must be accompanied by: (1) the required reply, unless previously filed; (2) the petition fee as set forth in 37 CFR 1.17(m); (3) a statement that the entire delay in filing the required reply from the due date for the reply until the filing of a grantable petition pursuant to 37 CFR 1.137(b) was unintentional; and (4) any terminal disclaimer (and fee as set forth in 37 CFR 1.20(d)) required by 37 CFR 1.137(d). Where there is a question as to whether either the abandonment or the delay in filing a petition under 37 CFR 1.137 was unintentional, the Director may require additional information. See MPEP 711.03(c)(II)(C) and (D). The instant petition lacks item(s) (2).

The rules and statutory provisions governing the operations of the U.S. Patent and Trademark Office require payment of a fee on filing each petition to revive an abandoned application for

patent based on unintentional delay or to accept an unintentionally delayed payment of a fee for issuing a patent. In this instance, the fee required by law is $1,540. If applicant can qualify as a "small entity" and does so prior to or together with the payment of the fee, the fee will be one-half of the amount indicated. See 37 CFR 1.27.

The petition in the above-identified application was not accompanied by payment of the required fee. The petition in the above-identified application was accompanied by the unavoidable fee, which was being filed unintentionally. No consideration on the merits can be given to the petition until the required fee is received.

It is not apparent whether the person signing the statement of unintentional delay was in a position to have firsthand or direct knowledge of the facts and circumstances of the delay at issue. Nevertheless, such statement is being treated as having been made as the result of a reasonable inquiry into the facts and circumstances of such delay. See 37 CFR 10.18(b) and Changes to Patent Practice and Procedure; Final Rule Notice, 62 Fed. Reg. 53131, 53178 (October 10, 1997), 1203 Off. Gaz. Pat. Office 63, 103 (October 21, 1997). In the event that such an inquiry has not been made, petitioner must make such an inquiry. If such inquiry results in the discovery that it is not correct that the entire delay in filing the required reply from the due date for the reply until the filing of a grantable petition pursuant to 37 CFR 1.137(b) was unintentional, petitioner must notify the Office.

Further correspondence with respect to this matter should be addressed as follows:

By mail: Mail Stop PETITIONS
Commissioner for Patents
Post Office Box 1450
Alexandria, VA 22313-1450

By hand: Customer Service Window
Mail Stop Petitions
Randolph Building
401 Dulany Street
Alexandria, VA 22314

By fax: (571) 273-8300
ATTN: Office of Petitions

Any questions concerning this matter may be directed to Tredelle Jackson at (571) 272-2783.

David Bucci
Petitions Examiner
Office of Petitions

UNITED STATES PATENT AND TRADEMARK OFFICE

Commissioner for Patents
United States Patent and Trademark Office
P.O. Box 1450
Alexandria, VA 22313-1450
www.uspto.gov

ERICSSON INC.
6300 LEGACY DRIVE
M/S EVR 1-C-11
PLANO TX 75024

COPY MAILED

JUN 1 6 2008

OFFICE OF PETITIONS

In re Application of	:	
Jean Pierre Von Der WEID et al.	:	
Application No. 10/125,759	:	DECISION ON PETITION
Filed: April 18, 2002	:	
Attorney Docket No. **P14893-US1**	:	

This is a decision on the renewed petition under the unintentional provisions of 37 CFR 1.137(b), filed April 07, 2008, to revive the above-identified application.

The petition is **GRANTED**.

This application became abandoned for failure to timely pay the issue and publication fees on or before February 13, 2008, as required by the Notice of Allowance and Fee(s) Due, mailed November 13, 2007. Accordingly, the date of abandonment of this application is February 14, 2008.

The petition satisfies the requirements of 37 CFR 1.137(b) in that petitioner has supplied (1) the reply in the form of payment of the issue fee of $1440 and the publication fee of $300, (2) the petition fee of $1540; and (3) a proper statement of unintentional delay. Accordingly, the Issue Fee payment is accepted as having been unintentionally delayed.

The $510 petition fee paid earlier is being credited to the Deposit Account 50-1379.

Telephone inquiries concerning this decision should be directed to Tredelle Jackson at (571) 272-2783.

This application is being referred to the Office of Data Management for processing into a patent.

Ramesh Krishnamurthy

Ramesh Krishnamurthy
Petitions Examiner
Office of Petitions

UNITED STATES PATENT AND TRADEMARK OFFICE

Commissioner for Patents
United States Patent and Trademark Office
P.O. Box 1450
Alexandria, VA 22313-1450
www.uspto.gov

Paper No.

FISH & RICHARDSON, PC
P.O. BOX 1022
MINNEAPOLIS MN 55440-1022

COPY MAILED
MAY 19 2006
OFFICE OF PETITIONS

In re Application of :
Hadlaczky et al. : DECISION ON PETITION
Application No. 10/125,767 :
Filed: April 17, 2002 :
Atty Docket No. 24601-402J :

This is a decision on the petition filed January 25, 2006, under 37 CFR 1.137(b), to revive the above-identified application.

The above-identified application became abandoned for failure to timely file a reply to the final Office action mailed May 19, 2005. The Office action set a three (3) month shortened statutory period for reply, with extensions of time obtainable under 37 CFR 1.136(a). No reply having been received and no extensions of time obtained, the above-identified application became abandoned on August 29, 2005. A courtesy Notice of Abandonment was mailed on January 20, 2006.

In response, applicants promptly filed the instant petition. Petitioners acknowledge that although a continuation application was filed on November 21, 2005, no petition and fee for extension of time for response within the third month was filed. Accordingly, the application became abandoned.

On petition, petitioner submits the three-month extension of time, the petition fee and a statement of unintentional delay. Petitioner seeks revival solely for continuity purposes.

It is noted that petitioners state that they requested mailing of a notice of abandonment and not abandonment of the prior application.

Petitioners are advised that receipt of a notice of abandonment is not required to file a petition to revive.

In view thereof, the petition is **GRANTED**.

The above-identified application is being revived solely for purposes of continuity. As continuity has been established by this decision reviving the application, the application is again abandoned in favor of the continuation application (No. 11/284,877), received November 21, 2005.

The petition also includes a fee of $1020 for extension for response within the third month. The maximum period for extension for response to the Notice ended on November 19, 2005. Thereafter, no extension of time could be obtained. As no extension of time is obtainable, the fee for such extension is being refunded to Deposit Account NO. 06-1050, as authorized.

Telephone inquiries related to this decision should be directed to the undersigned at 571-272-3219.

Nancy Johnson
Senior Petitions Attorney
Office of Petitions

UNITED STATES PATENT AND TRADEMARK OFFICE

Commissioner for Patents
United States Patent and Trademark Office
Washington, D.C. 20231
www.uspto.gov

Paper No. 9

BEYER WEAVER & THOMAS LLP
P.O. BOX 778
BERKELEY CA 94704-0778

COPY MAILED

APR 0 7 2003

OFFICE OF PETITIONS

In re Application of
Jan E. Unter
Application No. 10/125,777
Filed: April 17, 2002
Attorney Docket No. ELESP004

: DECISION ON PETITION
: UNDER 37 CFR 1.78(a)(3)

This is a decision on the petition under 37 CFR 1.78(a)(3), filed March 18, 2003, to accept an unintentionally delayed claim under 35 U.S.C. § 120 for the benefit of priority to prior-filed nonprovisional Application No. 09/062,300 set forth in the amendment embodied in the instant petition.

The petition is **DISMISSED**.

A petition for acceptance of a claim for late priority under 37 CFR 1.78(a)(3) is only applicable to those applications filed on or after November 29, 2000. Further, the petition is appropriate only after the expiration of the period specified in 37 CFR 1.78(a)(2)(ii). In addition, the petition under 37 CFR 1.78(a)(3) must be accompanied by:

(1) the reference required by 35 U.S.C. § 120 and 37 CFR 1.78(a)(2)(i) of the prior-filed application(s), unless previously submitted;[1]

(2) the surcharge set forth in § 1.17(t); and

(3) a statement that the entire delay between the date the claim was due under 37 CFR 1.78(a)(2)(ii) and the date the claim was filed was

---

[1] Any nonprovisional application or international application designating the United States of America claiming the benefit of one or more prior-filed copending applications or international applications designating the United States of America must contain or be amended to contain a reference (amendment to the first line of the specification following the title or in an application data sheet (ADS) to each such prior-filed application, identifying it by application number (consisting of the series code and serial number) or international application number and international filing date filing date and indicating the relationship of the applications. Cross references to other related applications may be made when appropriate (*see* § 1.14).

> unintentional. The Commissioner may require additional information where there is a question whether the delay was unintentional.

The reference to the above-noted, prior-filed application was not included in the manner specified in 37 CFR 1.78(a)(2)(iii) (i.e., in an ADS or in an amendment to the first sentence following the title of the specification) or filed within the period specified in 37 CFR 1.78(a)(2)(ii).

A reference to add the above-noted, prior-filed application on page one following the first sentence of the specification has been included in an amendment filed on March 18, 2003. However, the amendment is not acceptable as drafted since it improperly incorporates by reference the prior-filed application. Petitioner's attention is directed to Dart Industries v. Banner, 636 F.2d 684, 207 USPQ 273 (C.A.D.C. 1980), where the court drew a distinction between a permissible 35 U.S.C. § 120 statement and the impermissible introduction of new matter by way of incorporation by reference in a 35 U.S.C. § 120 statement. The court specifically stated:

> Section 120 merely provides a mechanism whereby an application becomes entitled to benefit of the filing date of an earlier application disclosing the same subject matter. Common subject matter must be disclosed, in both applications, either specifically or by an express incorporation-by-reference of prior disclosed subject matter. Nothing in section 120 itself operates to carry forward any disclosure from an earlier application. In re deSeversky, supra at 674, 177 USPQ at 146-147. Section 120 contains no magical disclosure-augmenting powers able to pierce new matter barriers. It cannot, therefore, "limit" the absolute and express prohibition against new matter contained in section 251.

In order for the incorporation by reference statement to be effective as a proper safeguard against the omission of a portion of a prior application, the incorporation by reference statement must be included in the specification-as-filed, or in an amendment specifically referred to in an oath or declaration executing the application. *See* In re de Seversky, *supra*. *Note also* MPEP 201.06(c).

Accordingly, before the petition under 37 CFR 1.78(a)(3) can be granted, a substitute amendment [2] deleting the incorporation by reference statement, along with a renewed petition under 37 CFR 1.78(a)(3), is required.

---

[2]Note 37 CFR 1.21

In order to expedite consideration, petitioner may wish to submit the substitute amendment and renewed petition by facsimile transmission to the number indicated below and to the attention of Karen Creasy.

Further correspondence with respect to this matter should be addressed as follows:

By mail: U.S. Patent and Trademark Office
P.O. Box 2327
Mail Stop DAC
Arlington, VA 22202

OR

Commissioner for Patents
Box DAC
Washington, D.C. 20231

By FAX: (703) 308-6916
Attn: Office of Petitions

By hand: Crystal Plaza Four, Suite 3C23
2201 South Clark Place
Arlington, VA 22202

Effective May 1, 2003, the new address for correspondence will be:

Mail Stop PETITION
Commissioner for Patents
Post Office Box 1450
Alexandria, VA 22313-1450

Any questions concerning this matter may be directed to Karen Creasy at (703) 305-8859.

Frances Hicks
Petitions Examiner
Office of Petitions
Office of the Deputy Commissioner
for Patent Examination Policy

United States Pat nt and Trademark Office

C mmissioner for Patents
United States Patent and Trademark Office
Washington, D.C. 20231
www.uspto.gov

Paper No. 12

BEYER WEAVER & THOMAS, LLP
P.O. BOX 778
BERKELEY, CA 94704-0778

COPY MAILED

APR 1 8 2003

OFFICE OF PETITIONS

In re Application of
Jan E. Unter
Application No. 10/125,777
Filed: April 17, 2002
Attorney Docket No. ELESP004

: DECISION ON PETITION
: UNDER 37 CFR 1.78(a)(3)

This is a decision on the renewed petition under 37 CFR 1.78(a)(3), filed by facsimile transmission on April 15, 2003 and supplemented on April 17, 2003, to accept an unintentionally delayed claim under 35 U.S.C. § 120 for the benefit of priority to prior-filed nonprovisional Application No. 09/062,300, filed April 17, 1998, set forth in the amendment filed April 17, 2003.

The petition is **GRANTED**.

A petition for acceptance of a claim for late priority under 37 CFR 1.78(a)(3) is only applicable to those applications filed on or after November 29, 2000. Further, the petition is appropriate only after the expiration of the period specified in 37 CFR 1.78(a)(2)(ii). In addition, the petition under 37 CFR 1.78(a)(3) must be accompanied by:

> **(1)** the reference required by 35 U.S.C. § 120 and 37 CFR 1.78(a)(2)(i) of the prior-filed application, unless previously submitted;[1]
> **(2)** the surcharge set forth in § 1.17(t); and
> **(3)** a statement that the entire delay between the date the claim was due under 37 CFR 1.78(a)(2)(ii) and the date the claim was

---

[1] Any nonprovisional application or international application designating the United States of America claiming the benefit of one or more prior-filed copending applications or international applications designating the United States of America must contain or be amended to contain a reference (amendment to the first line of the specification following the title or in an application data sheet (ADS) to each such prior-filed application, identifying it by application number (consisting of the series code and serial number) or international application number and international filing date filing date and indicating the relationship of the applications. Cross references to other related applications may be made when appropriate (*see* § 1.14).

> filed was unintentional. The Commissioner may require additional information where there is a question whether the delay was unintentional.

The instant pending application was filed on April 17, 2002, and was pending at the time of filing of the instant petition. A reference to the prior-filed nonprovisional application has been included in an amendment to the first sentence of the specification following the title, as required by 37 CFR 1.78(a)(2)(iii).

The instant nonprovisional application was filed after November 29, 2000, and the claim herein for the benefit of priority to the prior-filed application is submitted after expiration of the period specified in 37 CFR 1.78(a)(2)(ii). Also, the reference to the prior-filed application was submitted during the pendency of the instant nonprovisional application, for which the claim for benefit of priority is sought. *See* 35 U.S.C. § 120. Accordingly, having found that the instant petition for acceptance of an unintentionally delayed claim for the benefit of priority under 35 U.S.C. § 120 to the prior-filed application satisfies the conditions of 37 CFR 1.78(a)(3), the petition is granted.

The granting of the petition to accept the delayed benefit claim to the prior-filed application under 37 CFR 1.78(a)(3) should not be construed as meaning that the instant application is entitled to the benefit of the prior-filed application. In order for the instant application to be entitled to the benefit of the prior-filed application, all other requirements under 35 U.S.C. § 120 and 37 CFR 1.78(a)(1) and (a)(2) must be met. Similarly, the fact that the corrected Filing Receipt accompanying this decision on petition includes the prior-filed application should not be construed as meaning that applicant is entitled to the claim for benefit of priority to the prior-filed application noted thereon. Accordingly, the examiner will, in due course, consider this benefit claim and determine whether the instant application is entitled to the benefit of the earlier filing date.

A corrected Filing Receipt, which includes the priority claim to the prior-filed nonprovisional application, accompanies this decision on petition.

Any inquiries concerning this decision may be directed to Karen Creasy at (703) 305-8859.

This application is being forwarded to Technology Center Art Unit 2853 for consideration by the examiner of applicant's entitlement to claim benefit of priority under 35 U.S.C. § 120 to prior-filed nonprovisional Application No. 09/062,300, filed April 17, 1998.

Frances Hicks

Frances Hicks
Lead Petitions Examiner
Office of Petitions
Office of the Deputy Commissioner
for Patent Examination Policy

ATTACHMENT: Corrected Filing Receipt

SPE RESPONSE FOR CERTIFICATE OF CORRECTION

Paper No.: _____

DATE : 9-28-06

TO SPE OF : ART UNIT 2818

SUBJECT : Request for Certificate of Correction for Appl. No.: 10/125740 Patent No.: 6982194

Please respond to this request for a certificate of correction within 7 days.

Please review the requested changes/corrections as shown in the **COCIN** document(s) in the IFW application image. No new matter should be introduced, nor should the scope or meaning of the claims be changed.

Please complete the response (see below) and forward the completed response to scanning using document code **COCX**.

Certificates of Correction Branch

703-308-9390 ext. 117

Thank You For Your Assistance

The request for issuing the above-identified correction(s) is hereby:

Note your decision on the appropriate box.

☒ **Approved**	All changes apply.
☐ **Approved in Part**	Specify below which changes do not apply.
☐ **Denied**	State the reasons for denial below.

Comments: All changes are approved

SPE

2823

Art Unit

UNITED STATES PATENT AND TRADEMARK OFFICE

Commissioner for Patents
United States Patent and Trademark Office
P.O. Box 1450
Alexandria, VA 22313-1450
www.uspto.gov

KATTEN MUCHIN ROSENMAN LLP
575 MADISON AVENUE
NEW YORK NY 10022-2585

COPY MAILED

OCT 27 2006

OFFICE OF PETITIONS

In re Application of	:	
Keiichi Nakatsugawa, et al.	:	
Application No. 10/125,806	:	DECISION GRANTING PETITION
Filed: April 19, 2002	:	UNDER 37 CFR 1.313(c)(2)
Attorney Docket No. FUJH 19.665	:	

This is a decision on the petition under 37 CFR 1.313(c)(2), filed October 20, 2006, to withdraw the above-identified application from issue after payment of the issue fee.

The petition is **GRANTED**.

The above-identified application is withdrawn from issue for consideration of a submission under 37 CFR 1.114 (request for continued examination). *See* 37 CFR 1.313(c)(2).

Petitioner is advised that the issue fee paid on September 21, 2006 cannot be refunded. If, however, this application is again allowed, petitioner may request that it be applied towards the issue fee required by the new Notice of Allowance.[1]

Telephone inquiries regarding this decision should be directed to April Wise at (571) 272-1642.

This application is being referred to Technology Center AU 2618 for processing of the request for continued examination under 37 CFR 1.114 and for consideration of the concurrently filed information disclosure statement.

Frances M. Hicks
Petitions Examiner
Office of Petitions

[1] *The request to apply the issue fee to the new Notice may be satisfied by completing and returning the new Part B – Fee(s) Transmittal Form (along with any balance due at the time of submission). Petitioner is advised that the Issue Fee Transmittal Form* ***must*** *be completed and timely submitted to avoid abandonment of the application.*

UNITED STATES PATENT AND TRADEMARK OFFICE

COMMISSIONER FOR PATENTS
UNITED STATES PATENT AND TRADEMARK OFFICE
P.O. BOX 1450
ALEXANDRIA, VA 22313-1450
www.uspto.gov

OSI PHARMACEUTICALS INC
58 SOUTHE SERVICE ROAD
SUITE 110
MELVILLE, NY 11747

COPY MAILED
AUG 25 2006
OFFICE OF PETITIONS

In re Application of	:
Liu, et al.	: DECISION ON PETITION
Application No. 10/125,823	:
Filed: April 22, 2002	:
Atty. Dkt. No.: P-165-2	:

This is a decision on the petition under 37 CFR 1.137(b), filed February 13, 2006, to revive the above-identified application.

The petition is **GRANTED**.

This application became abandoned August 12, 2005 for failure to timely submit a proper reply to the Office communication mailed July 11, 2005. The Office communication set a one-month shortened statutory period of time for reply. No extension of time in accordance with 37 CFR 1.136(a) was timely requested. Notice of Abandonment was mailed February 7, 2006.

A grantable petition pursuant to 37 C.F.R. § 1.137(b) must be accompanied by: (1) the required reply to the outstanding Office action or notice, unless previously filed; (2) the petition fee as set forth in 37 C.F.R. § 1.17(m); (3) a statement that the entire delay in filing the required reply from the due date for the reply until the filing of a grantable petition pursuant to 37 C.F.R. § 1.137(b) was unintentional; and (4) any terminal disclaimer (and fee set forth in 37 C.F.R. § 1.20(d)) required pursuant to 37 C.F.R. § 1.137(c).

The instant petition has been reviewed and found in compliance with the provisions of 37 CFR 1.137(b). Accordingly, the failure to timely submit a proper reply to the Office communication is accepted as having been unintentionally delayed.

Pursuant to 37 CFR 1.136, an extension of time must be filed prior to the expiration of the maximum period obtainable for reply to avoid abandonment. Accordingly, since the extension of time fee submitted herewith was subsequent to the maximum period obtainable for reply, this fee is unnecessary. Petitioners may request a refund of this fee by writing to the Office of

Finance, Refund Section. A copy of this decision should accompany any request for refund.

This application will be forwarded to Technology Center 1600 for further processing.

Telephone inquiries concerning this matter may be directed to the undersigned at (571) 272-3205.

Alesia M. Brown
Petitions Attorney
Office of Petitions

06-13-02

RECEIVED

JUN 19 2002 1655 #3/A

TECH CENTER 1600/2900

EXPRESS MAIL CERTIFICATE

Date 6/11/02 Label No. EV 028719525-US

I hereby certify that, on the date indicated above, this paper or fee was deposited with the U.S. Postal Service & that it was addressed for delivery to the Assistant Commissioner for Patents, Washington, DC 20231 by "Express Mail Post Office to Addressee" service.

D B Peck

Name (Print) Signature

OIPE JUN 11 2002 PATENT & TRADEMARK OFFICE

PLEASE CHARGE ANY DEFICIENCY UP TO $300.00 OR CREDIT ANY EXCESS IN THE FEES DUE WITH THIS DOCUMENT TO OUR DEPOSIT ACCOUNT NO. 04-0100

Customer No.: 07278

PATENT TRADEMARK OFFICE

Docket No: 3322/1H702US2

IN THE UNITED STATES PATENT AND TRADEMARK OFFICE

In re Application of: Joanne M. MEYER, Rory BARRINGTON-MARTIN and Alexander PARKER

Serial No.: 10/125,835 Art Unit: 1655

Confirmation No.: 3785

Filed: April 19, 2002 Examiner: Jeanine Anne GOLDBERG

For: METHODS AND COMPOSITIONS FOR THE DIAGNOSIS AND TREATMENT OF NEUROPSYCHIATRIC DISORDERS, INCLUDING SCHIZOPHRENIA

RESPONSE TO NOTICE TO COMPLY WITH REQUIREMENTS FOR PATENT APPLICATIONS CONTAINING NUCLEOTIDE SEQUENCE AND/OR AMINO ACID SEQUENCES DISCLOSURES

Hon. Commissioner of Patents and Trademarks
Washington, DC 20231

Sir:

In response to the Notice to Comply with Requirements for Patent Applications Containing Nucleotide Sequence and/or Amino Acid Sequence Disclosures (the "Notice to Comply") mailed on May 20, 2002 for this application,

Applicants submit herewith: (1) a paper copy of the Sequence Listing for this Application; and (2) a return copy of the Notice to Comply.

This application is a divisional of U.S. patent application Serial No. 09/757,300 filed on January 9, 2001 (hereinafter referred to as "the '300 application). The Sequence Listing in this application is the same as that in the '300 application. Accordingly, the paper copy of the Sequence Listing submitted herewith is identical to that filed in the '300 application. In accordance with 37 C.F.R. § 1.821(e), please use the CRF filed in the '300 application as the CRF for this application.

Pursuant to the requirements of 37 C.F.R. §§ 1.821(e), (f) and (g), the undersigned hereby states that the content of the attached Sequence Listing is identical to the CRF filed in the '300 application and that the Sequence Listing does not contain new matter. Entry of the paper copy of the Sequence Listing submitted herewith and use of the CRF originally filed in the '300 application are therefore respectfully requested.

Respectfully submitted,

Dated: June 11, 2002

Samuel S. Woodley

Samuel S. Woodley, Ph.D.
Reg. No. 43,287
Agent for Applicants

DARBY & DARBY, P.C.
Post Office Box 5257
New York, N.Y. 10150-5257
Phone (212) 527-7700

RECEIVED
JUN 19 2002
TECH CENTER 1600/2900

OIPE JC64
JUN 11 2002
PATENT & TRADEMARK OFFICE

UNITED STATES PATENT AND TRADEMARK OFFICE
COMMISSIONER FOR PATENTS
UNITED STATES PATENT AND TRADEMARK OFFICE
WASHINGTON, D.C. 20231
www.uspto.gov

APPLICATION NUMBER	FILING/RECEIPT DATE	FIRST NAMED APPLICANT	ATTORNEY DOCKET NUMBER
10/125,835	04/19/2002	Joanne M. Meyer	3322/1H702US2

CONFIRMATION NO. 3785

FORMALITIES LETTER

OC000000008154829

07278
DARBY & DARBY P.C.
POST OFFICE BOX 5257
NEW YORK, NY 10150-5257

Date Mailed: 05/20/2002

NOTICE TO COMPLY WITH REQUIREMENTS FOR PATENT APPLICATIONS CONTAINING NUCLEOTIDE SEQUENCE AND/OR AMINO ACID SEQUENCE DISCLOSURES

Applicant is given **TWO MONTHS FROM THE DATE OF THIS NOTICE** within which to file the items indicated below to avoid abandonment. Extensions of time may be obtained under the provisions of 37 CFR 1.136(a).

- This application clearly fails to comply with the requirements of 37 C.F.R. 1.821-1.825. Applicant's attention is directed to the final rulemaking notice published at 55 FR 18230 (May 1, 1990), and 1114 OG 29 (May 15, 1990). If the effective filing date is on or after July 1, 1998, see the final rulemaking notice published at 63 FR 29620 (June 1, 1998) and 1211 OG 82 (June 23, 1998). If the effective filing date is on or after September 8, 2000, see the final rulemaking notice published in the Federal Register at 65 FR 54604 (September 8, 2000) and 1238 OG 145 (September 19, 2000). Applicant must provide an initial computer readable form (CRF) copy of the "Sequence Listing", an initial paper or compact disc copy of the "Sequence Listing", as well as an amendment directing its entry into the application. Applicant must also provide a statement that the content of the sequence listing information recorded in computer readable form is identical to the written (on paper or compact disc) sequence listing and, where applicable, includes no new matter, as required by 37 CFR 1.821(e), 1.821(f), 1.821(g), 1.825(b), or 1.825(d). If applicant desires the sequence listing in the instant application to be identical with that of another application on file in the U.S. Patent and Trademark Office, such request in accordance with 37 CFR 1.821(e) may be submitted in lieu of a new CRF.

For questions regarding compliance to these requirements, please contact:

- **For Rules Interpretation, call (703) 308-4216**
- **To Purchase PatentIn Software, call (703) 306-2600**
- **For PatentIn Software Program Help, call (703) 306-4119 or e-mail at patin21help@uspto.gov or patin3help@uspto.gov**

A copy of this notice MUST be returned with the reply.

Customer Service Center
Initial Patent Examination Division (703) 308-1202
PART 2 - COPY TO BE RETURNED WITH RESPONSE

3 0 SEP 2003
UNITED STATES PATENT AND TRADEMARK OFFICE

COMMISSIONER FOR PATENTS
UNITED STATES PATENT AND TRADEMARK OFFICE
P.O. BOX 1450
ALEXANDRIA, VA 22313-1450
www.uspto.gov

Thomas H. Martin
Martin & Ferraro, LLP
14500 Avion Parkway, Suite 300
Chantilly, VA 20151-1101

In re Application of MICHELSON U.S. Application No.: 10/125,847 PCT No.: PCT/US02/06021 Int. Filing Date: 01 March 2002 Priority Date: 01 March 2001 Attorney Docket No.: 101.0109-00000 For: DYNAMIC LORDOTIC GUARD WITH MOVABLE EXTENSIONS FOR CREATING AN IMPLANTATION SPACE POSTERIORLY IN THE LUMBAR SPINE AND METHOD FOR USE THEREOF	DECISION ON PETITION UNDER 37 CFR 1.181

This decision is in response to applicant's "Petition Under 37 C.F.R. § 1.182" originally filed 04 November 2002, and again by facsimile on 28 August 2003 in the United States Patent and Trademark Office (USPTO). The petition is being treated as a petition under 37 CFR 1.181. No petition fee is due. The initial papers filed 19 April 2002 were processed as a filing under 35 U.S.C. 111(a). For the reasons discussed below, the application will be converted to a national stage filing of PCT/US02/06021.

BACKGROUND

On 01 March 2002, applicant filed international application PCT/US02/06021 which claimed a priority date of 01 March 2001.

On 19 April 2002, applicant filed the present application. The application papers filed therewith included a transmittal letter; a specification containing 145 claims, a signed combined declaration and power of attorney and a check in the amount of $2,990.00 as payment of the U.S. Basic National Fee. None of the transmittal papers referred to 35 U.S.C. 371 or "national stage." The application was processed as a filing under 35 U.S.C. 111(a).

On 04 November 2002, applicant filed the present petition under 37 CFR 1.182 to have the application converted to a PCT National phase application under 35 U.S.C. 371. Applicant included payment of the $130.00 petition fee.

DISCUSSION

Any intended filing of an international application as a national stage application must clearly and unambiguously be identified as such and must satisfy all of the conditions set forth in 35 U.S.C. 371(c). The official USPTO Notice published in the Official Gazette at 1077 OG 13 entitled "Minimum Requirements for Acceptance of Applications Under 35 U.S.C. 371 (the National Stage of PCT)" states, in part, the following:

> To clearly indicate an international application is being filed under 35 U.S.C. 371 the applicant should use the "Transmittal Letter for United States Designated Office" (Form PTO-1390) as the transmittal letter.
>
> Alternatively, one of the following indications may be used:
> 1) the applicant shall clearly state in the transmittal or cover letter that he or she is filing under 35 U.S.C. 371 or entering the national stage under PCT; or
>
> 2) the applicant clearly identifies in the oath or declaration the specification to which it is directed by referring to a particular international application by PCT Serial Number and International Filing Date and that he or she is executing the declaration as, and seeking a U.S. Patent as, the inventor of the invention described in the identified international application.

An examination of the application file finds that in the declaration filed 19 April 2002, the applicant clearly identifies the specification to which it is directed by referring to international application PCT/US02/06021. This is a clear indication that the papers were filed under 35 U.S.C. 371. The transmittal letter did not contain any instructions in conflict therewith. As such it is proper to grant applicant's petition at this time and process the application under 35 U.S.C. 371 instead of 35 U.S.C. 111.

CONCLUSION

For the reasons above, applicant's petition under 37 CFR 1.181 is **GRANTED**. The application will be converted from a 35 U.S.C. 111 filing to a national stage application under 35 U.S.C. 371.

As discussed above, no petition fee is required. As such, $130.00 will be credited to Deposit Account No.: 50-1066.

This application has an international filing date of 01 March 2002 under 35 U.S.C. 363 and a 35 U.S.C. 371(c) date of **19 April 2002**.

This application is being returned to the United States Designated/Elected Office (DO/EO/US) for treatment in accordance with this decision, that is, for mailing of a Notification of Acceptance of Application (Form PCT/DO/EO/903) and Official Filing Receipt which identifies this application as a national stage application of PCT/US02/06021.

Thereafter, the application will be forwarded to Art Unit 3731.

Leonard Smith
Legal Examiner
Office of PCT Legal Administration

Derek A. Putonen
Attorney Advisor
Office of PCT Legal Administration
Tel: 703-305-0130
Fax: 703-308-6459

UNITED STATES PATENT AND TRADEMARK OFFICE

Commissioner for Patents
United States Patent and Trademark Office
P.O. Box 1450
Alexandria, VA 22313-1450
www.uspto.gov

VERTEX PHARMACEUTICALS INCORPORATED
130 Waverly Street
Cambridge, MA 02130-4646

COPY MAILED

MAR 14 2008

OFFICE OF PETITIONS

In re Application of :
Jingrong Cao, et. al. :
Application No. 10/125,885 : DECISION ON PETITION
Filed: April 19, 2002 :
Attorney Docket No. VPI/01-108 :
US

This is a decision on the petition under the unintentional provisions of 37 CFR 1.137(b), filed on February 14, 2008, to revive the above-identified application.

The petition is **DISMISSED**.

Any request for reconsideration of this decision must be submitted within **TWO (2) MONTHS** from the mail date of this decision. Extensions of time under 37 CFR 1.136(a) are permitted. The reconsideration request should include a cover letter entitled "Renewed Petition under 37 CFR 1.137(b)." This is **not** a final agency action within the meaning of 5 U.S.C. § 704.

The application became abandoned for failure to timely respond to the non-final Office action mailed January 14, 2004. A Notice of Abandonment was mailed on September 17, 2004.

A grantable petition under 37 CFR 1.137(b) must be accompanied by: (1) the required reply, unless previously filed; (2) the petition fee as set forth in 37 CFR 1.17(m); (3) a statement that the entire delay in filing the required reply from the due date for the reply until the filing of a grantable petition pursuant to 37 CFR 1.137(b) was unintentional; and (4) any terminal disclaimer (and fee as set forth in 37 CFR 1.20(d)) required by 37 CFR 1.137(d). Where there is a question as to whether either the abandonment or the delay in filing a petition under 37 CFR 1.137 was unintentional, the Director may require additional

information. *See* MPEP 711.03(c)(II)(C) and (D). The instant petition lacks item (3).

There are three periods to be considered during the evaluation of a petition under 37 CFR 1.137(b):

(1) the delay in reply that originally resulted in the abandonment;

(2) the delay in filing an initial petition pursuant to 37 CFR 1.137(b) to revive the application; and

(3) the delay in filing a grantable petition pursuant to 37 CFR 1.137(b) to revive the application.

Currently, the delay has not been shown to the satisfaction of the Director to be unintentional for periods (1) and (3).

As to Period (1):

The patent statute at 35 U.S.C. § 41(a)(7) authorizes the Director to revive an "unintentionally abandoned application." The legislative history of Public Law 97-247 reveals that the purpose of 35 U.S.C. § 41(a)(7) is to permit the Office to have more discretion than in 35 U.S.C. §§ 133 or 151 to revive abandoned applications in appropriate circumstances, but places a limit on this discretion, stating that "[u]nder this section a petition accompanied by either a fee of $500 or a fee of $50 **would not be granted where the abandonment** or the failure to pay the fee for issuing the patent **was intentional** as opposed to being unintentional or unavoidable." [emphasis added]. See H.R. Rep. No. 542, 97th Cong., 2d Sess. 6-7 (1982), *reprinted in* 1982 U.S.C.C.A.N. 770-71. The revival of an intentionally abandoned application is antithetical to the meaning and intent of the statute and regulation.

35 U.S.C. § 41(a)(7) authorizes the Director to accept a petition "for the revival of an unintentionally abandoned application for a patent." As amended December 1, 1997, 37 CFR 1.137(b)(3) provides that a petition under 37 CFR 1.137(b) must be accompanied by a statement that the delay was unintentional, but provides that "[t]he Commissioner may require additional information where there is a question whether the delay was unintentional." Where, as here, there is a question whether the initial delay was unintentional, the petitioner must meet the

burden of establishing that the delay was unintentional within the meaning of 35 U.S.C. § 41(a)(7) and 37 CFR 1.137(b). *See* In re Application of G, 11 USPQ2d 1378, 1380 (Comm'r Pats. 1989); 37 CFR 1.137(b). Here, in view of the inordinate delay (over 3 years) in resuming prosecution, there is a question whether the entire delay was unintentional. Petitioner should note that the issue is not whether some of the delay was unintentional by any party; rather, the issue is whether the entire delay has been shown to the satisfaction of the Director to be unintentional.

The question under 37 CFR 1.137(b) for period (1) is whether the delay on the part of the party having the right or authority to reply to avoid abandonment (or not reply) was unintentional. Accordingly, any renewed petition must clearly identify the party having the right to reply to avoid abandonment on April 15, 2004. That party, in turn must explain what effort(s) was made to further reply to the outstanding Office action and, further, why no reply was filed. If no effort was made to further reply, then that party must explain why the delay in this application does not result from a deliberate course of action (or inaction). Likewise, Vertex Pharmaceuticals Incorporated were the counsels of record at the time of abandonment, they should explain why this application became abandoned while it was under their control and what efforts were made to reply and with whom this matter was discussed outside of their Office. Copies of any correspondence relating to the filing, or to not filing a further reply to the outstanding Office action are required from the responsible person(s)and whoever else was involved with this application at the time of abandonment. Statements are required from any and all persons at Vertex Pharmaceuticals Incorporated and the responsible person(s) having firsthand knowledge of the circumstances surrounding the lack of a reply to the outstanding Office action. As the courts have made clear, it is pointless for the USPTO to revive a long abandoned application without an adequate showing that the delay did not result from a deliberate course of action. *See* Lawman Armor v. Simon, 2005 U.S. Dist. LEXIS 10843, 74 USPQ2d 1633 (DC EMich 2005); Field Hybrids, LLC v. Toyota Motor Corp., 2005 U.S. Dist. LEXIS 1159 (D. Minn Jan. 27, 2005); Lumenyte Int'l Corp. v. Cable Lite Corp., Nos. 96-1011, 96-1077, 1996 U.S. App. LEXIS 16400, 1996 WL 383927 (Fed. Cir. July 9, 1996) (unpublished) (patents held unenforceable due to a finding of inequitable conduct in submitting an inappropriate statement that the abandonment was unintentional).

As to Period (2):

Likewise, where the applicant deliberately chooses not to seek or persist in seeking the revival of an abandoned application, or where the applicant deliberately chooses to delay seeking the revival of an abandoned application, the resulting delay in seeking revival of the abandoned application cannot be considered as "unintentional" within the meaning of 37 CFR 1.137(b). *See* MPEP 711.03(c).

The language of both 35 U.S.C. § 41(a)(7) and 37 CFR 1.137(b) are clear and unambiguous, and, furthermore, without qualification. That is, the delay in filing the reply during prosecution, as well as in filing the petition seeking revival, must have been, without qualification, "unintentional" for the reply to now be accepted on petition. The Office requires that the entire delay be at least unintentional as a prerequisite to revival of an abandoned application to prevent abuse and injury to the public. *See* H.R. Rep. No. 542, 97th Cong., 2d Sess. 7 (1982), reprinted in 1982 U.S.C.C.A.N. 771 ("[i]n order to prevent abuse and injury to the public the Commissioner . . . could require applicants to act promptly after becoming aware of the abandonment"). The December 1997 change to 37 CFR 1.137 did not create any new right to overcome an intentional delay in seeking revival, or in renewing an attempt at seeking revival, of an abandoned application. *See* Changes to Patent Practice and Procedure; Final Rule Notice, 62 Fed. Reg. 53131, 53160 (October 10, 1997), 1203 Off. Gaz. Pat. Office 63, 87 (October 21, 1997), which clearly stated that any protracted delay (here, over 3 years) could trigger, as here, a request for additional information. As the courts have since made clear, a protracted delay in seeking revival, as here, requires a petitioner's detailed explanation seeking to excuse the delay as opposed to USPTO acceptance of a general allegation of unintentional delay. *See* Lawman Armor v. Simon, 2005 U.S. Dist. LEXIS 10843, 74 USPQ2d 1633, at 1637-8 (DC EMich 2005); Field Hybrids, LLC v. Toyota Motor Corp., 2005 U.S. Dist. LEXIS 1159 (D. Minn Jan. 27, 2005) at *21-*23. Statements are required from any and all persons then at Vertex Pharmaceuticals Incorporated and the responsible person(s) having firsthand knowledge of the circumstances surrounding the protracted delay, after the abandonment date, in seeking revival.

As noted in MPEP 711.03(c)(II), subsection D, in instances in which such petition was not filed within 1 year of the date of abandonment of the application, applicants should include:

(A) the date that the applicant first became aware of the abandonment of the application; and

(B) a showing as to how the delay in discovering the abandoned status of the application occurred despite the exercise of due care or diligence on the part of the applicant.

In either instance, applicant's failure to carry the burden of proof to establish that the "entire" delay was "unavoidable" or "unintentional" may lead to the denial of a petition under 37 CFR 1.137(b), regardless of the circumstances that originally resulted in the abandonment of the application. *See also* New York University v. Autodesk, 2007 U.S. DIST LEXIS, U.S.District LEXIS 50832, *10 -*12 (S.D.N.Y. 2007)(protracted delay in seeking revival undercuts assertion of unintentional delay).

Any renewed petition may be addressed as follows:

By mail: Mail Stop PETITION
Commissioner for Patents
P.O. Box 1450
Alexandria, VA 22313-1450

By hand: U.S. Patent and Trademark Office
Customer Service Window, Mail Stop Petitions
Randolph Building
401 Dulany Street
Alexandria, VA 22314

The centralized facsimile number is **(571) 273-8300.**

Correspondence regarding this decision may also be filed through the electronic filing system of the USPTO.

Telephone inquiries concerning this decision should be directed to the undersigned at (571) 272-3226.

Andrea Smith
Petitions Examiner
Office of Petitions

UNITED STATES PATENT AND TRADEMARK OFFICE

Commissioner for Patents
United States Patent and Trademark Office
P.O. Box 1450
Alexandria, VA 22313-1450
www.uspto.gov

STITES & HARBISON
TRANSPOTOMAC PLAZA
1199 N. FAIRFAX ST.
SUITE 900
ALEXANDRIA, VA 22314-1437

COPY MAILED

FEB 0 2 2007

OFFICE OF PETITIONS

In re Application of	:	
Meyer, Corwyn R.	:	
Application No. 10/125,937	:	ON PETITION
Filed: April 18, 2002	:	
Attorney Docket No. 450.347US1	:	

This is a decision on the petition under 37 C.F.R. § 1.137(b), filed November 16, 2006, to revive the above-identified application.

The petition is **GRANTED.**

The petition satisfies the conditions for revival pursuant to the provisions of 37 CFR 1.137(b) in that (1) the reply in the form of a Request for Continued Examination (RCE) and a Preliminary Amendment; (2) the petition fee; and (3) the required statement of unintentional delay have been received. Accordingly, the response has been accepted as having been unintentionally delayed.

This matter is being referred to Technology Center 2600 for processing of the Request for Continued Examination under 37 CFR 1.114 filed November 27, 2006.

Telephone inquiries regarding this decision should be directed to the undersigned at (571) 272-3206.

Liana Walsh
Petitions Examiner
Office of Petitions

UNITED STATES PATENT AND TRADEMARK OFFICE

Commissioner for Patents
United States Patent and Trademark Office
P.O. Box 1450
Alexandria, VA 22313-1450
www.uspto.gov

Gateway, Inc.
Attention: Mark Dickey
MS Y-04
610 Gateway Drive
N. Sioux City, SD 57049

COPY MAILED

OCT 27 2008

OFFICE OF PETITIONS

In re Application of	:	
Corwyn R. Meyer	:	
Application No. 10/125,937	:	DECISION ON PETITION
Filed: April 18, 2002	:	
Attorney Docket No. P1781US00	:	

This is a decision on the petition under the unintentional provisions of 37 CFR 1.137(b), filed July 30, 2008, to revive the above-identified application.

The petition is **GRANTED**.

This application became abandoned for failure to timely pay the issue and publication fees on or before June 14, 2008, as required by the Notice of Allowance and Fee(s) Due, mailed March 14, 2008. Accordingly, the date of abandonment of this application is June 15, 2008.

The petition satisfies the requirements of 37 CFR 1.137(b) in that petitioner has supplied (1) the reply in the form of payment of the issue fee of $1440.00 and the publication fee of $300.00, (2) the petition fee of $1540.00; and (3) a proper statement of unintentional delay.

Telephone inquiries concerning this decision should be directed to JoAnne Burke at (571) 272-4584.

This application is being referred to the Office of Data Management for processing into a patent.

Ramesh Krishnamurthy

Ramesh Krishnamurthy
Petitions Examiner
Office of Petitions

RECEIVED 002
CENTRAL FAX CENTER
JUL 30 2008

PTO/SB/64 (01-08)
Approved for use through 07/31/2008. OMB 0651-0031
U.S. Patent and Trademark Office; U.S. DEPARTMENT OF COMMERCE
Under the Paperwork Reduction Act of 1995, no persons are required to respond to a collection of information unless it displays a valid OMB control number.

PETITION FOR REVIVAL OF AN APPLICATION FOR PATENT ABANDONED UNINTENTIONALLY UNDER 37 CFR 1.137(b)

Docket Number (Optional) P1781US00

First named inventor: MEYER, Corwyn R.

Application No.: 10/125,937 Art Unit: 2629

Filed: 4/18/2002 Examiner: LIANG, Regina

Title: AUTOMATIC PHASE ADJUSTMENT FOR DISPLAY

Attention: Office of Petitions
Mail Stop Petition
Commissioner for Patents
P.O. Box 1450
Alexandria, VA 22313-1450
FAX (571) 273-8300

NOTE: If information or assistance is needed in completing this form, please contact Petitions Information at (571) 272-3282.

The above-identified application became abandoned for failure to file a timely and proper reply to a notice or action by the United States Patent and Trademark Office. The date of abandonment is the day after the expiration date of the period set for reply in the office notice or action plus an extensions of time actually obtained.

APPLICANT HEREBY PETITIONS FOR REVIVAL OF THIS APPLICATION

NOTE: A grantable petition requires the following items:
(1) Petition fee;
(2) Reply and/or issue fee;
(3) Terminal disclaimer with disclaimer fee - required for all utility and plant applications filed before June 8, 1995; and for all design applications; and
(4) Statement that the entire delay was unintentional.

1. Petition fee
☐ Small entity-fee $ _____ (37 CFR 1.17(m)). Applicant claims small entity status. See 37 CFR 1.27.
☑ Other than small entity – fee $ 1540.00 (37 CFR 1.17(m))

2. Reply and/or fee
A. The reply and/or fee to the above-noted Office action in the form of Issue Fee Transmittal with deposit account authorization (identify type of reply):
☐ has been filed previously on _____.
☑ is enclosed herewith.

B. The issue fee and publication fee (if applicable) of $ 1740.00.
☐ has been paid previously on _____.
☑ is enclosed herewith.

This collection of information is required by 37 CFR 1.137(b). The information is required to obtain or retain a benefit by the public which is to file (and by the USPTO to process) an application. Confidentiality is governed by 35 U.S.C. 122 and 37 CFR 1.11 and 1.14. This collection is estimated to take 1.0 hour to complete, including gathering, preparing, and submitting the completed application form to the USPTO. Time will vary depending upon the individual case. Any comments on the amount of time you require to complete this form and/or suggestions for reducing this burden, should be sent to the Chief Information Officer, U.S. Patent and Trademark Office, U.S. Department of Commerce, P.O. Box 1450, Alexandria, VA 22313-1450. DO NOT SEND FEES OR COMPLETED FORMS TO THIS ADDRESS. SEND TO: Mail Stop Petition, Commissioner for Patents, P.O. Box 1450, Alexandria, VA 22313-1450.

If you need assistance in completing the form, call 1-800-PTO-9199 and select option 2.

07/31/2008 VBUI22 00000001 580439 10125937
01 FC:1453 1540.00 DA

RECEIVED
CENTRAL FAX CENTER
JUL 30 2008

PTO/SB/64 (01-08)
Approved for use through 07/31/2008. OMB 0651-0031
U.S. Patent and Trademark Office; U.S. DEPARTMENT OF COMMERCE
Under the Paperwork Reduction Act of 1995, no persons are required to respond to a collection of information unless it displays a valid OMB control number.

3. Terminal disclaimer with disclaimer fee

☑ Since this utility/plant application was filed on or after June 8, 1995, no terminal disclaimer is required.

☐ A terminal disclaimer (and disclaimer fee (37 CFR 1.20(d)) of $ _____ for a small entity or $ _____ for other than a small entity) disclaiming the required period of time is enclosed herewith (see PTO/SB/63).

4. STATEMENT: The entire delay in filing the required reply from the due date for the required reply until the filing of a grantable petition under 37 CFR 1.137(b) was unintentional. [NOTE: The United States Patent and Trademark Office may require additional information if there is a question as to whether either the abandonment or the delay in filing a petition under 37 CFR 1.137(b) was unintentional (MPEP 711.03(c), subsections (III)(C) and (D)).]

WARNING:

Petitioner/applicant is cautioned to avoid submitting personal information in documents filed in a patent application that may contribute to identity theft. Personal information such as social security numbers, bank account numbers, or credit card numbers (other than a check or credit card authorization form PTO-2038 submitted for payment purposes) is never required by the USPTO to support a petition or an application. If this type of personal information is included in documents submitted to the USPTO, petitioners/applicants should consider redacting such personal information from the documents before submitting them to the USPTO. Petitioner/applicant is advised that the record of a patent application is available to the public after publication of the application (unless a non-publication request in compliance with 37 CFR 1.213(a) is made in the application) or issuance of a patent. Furthermore, the record from an abandoned application may also be available to the public if the application is referenced in a published application or an issued patent (see 37 CFR 1.14). Checks and credit card authorization forms PTO-2038 submitted for payment purposes are not retained in the application file and therefore are not publicly available.

Signature	July 30, 2008 Date
Jeffrey A. Proehl Typed or printed name	35,987 Registration Number, if applicable
Gateway Inc. Mail Stop Y-04 Address	(605) 232-2000 ext. 26809 Telephone Number
610 Gateway Dr., N. Sioux City, SD 57049 Address	

Enclosures: ☑ Fee Payment

☑ Reply

☐ Terminal Disclaimer Form

☐ Additional sheets containing statements establishing unintentional delay

☐ Other: _____

CERTIFICATE OF MAILING OR TRANSMISSION [37 CFR 1.8(a)]

I hereby certify that this correspondence is being:

☐ Deposited with the United States Postal Service on the date shown below with sufficient postage as first class mail in an envelope addressed to: Mail Stop Petition, Commissioner for Patents, P. O. Box 1450, Alexandria, VA 22313-1450.

☑ Transmitted by facsimile on the date shown below to the United States Patent and Trademark Office at (571) 273-8300.

July 30, 2008 Date	Signature
	Lori Boulware Typed or printed name of person signing certificate

PAGE 3/5 * RCVD AT 7/30/2008 4:26:38 PM [Eastern Daylight Time] * SVR:USPTO-EFXRF-5/25 * DNIS:2738300 * CSID:605 232 2612 * DURATION (mm-ss):02-08

Patent

RECEIVED
CENTRAL FAX CENTER
JUL 30 2008

Docket No. P1781US00

IN THE UNITED STATES PATENT AND TRADEMARK OFFICE

In Re Application Of	:	MEYER, Corwyn R.
Serial No.	:	10/125,937
Filed	:	4/18/2002
Art Unit	:	2629
Examiner	:	LIANG, Regina
Title:		AUTOMATIC PHASE ADJUSTMENT FOR DISPLAY

MS Petition
Commissioner for Patent
P.O. Box 1450
Alexandria, VA 22313-1450

AUTHORIZATION TO CHARGE DEPOSIT ACCOUNT

Dear Sir:

The Commissioner is hereby authorized to charge the following fees, as well as credit any overpayments, to Deposit Account No. 50-0439 (Gateway, Inc.).

Petition Fee for Revival of an Application for a Patent Abandoned Unintentionally Under 37 CFR 1.137(b) (other than small entity)	$1540.00

Respectfully submitted,

GATEWAY, INC.

By _____ Date: July 30, 2008

Jeffrey A. Proehl (Reg. No. 35,987)
Customer No. 24,333
Gateway, Inc.
610 Gateway Dr., Y-04
N. Sioux City, SD 57049
Telephone (605) 232-1967
Fax (605) 232-2612

10/125937 Examiner: LIANG, REGINA GAU: 2629
Inventor: MEYER , CORWYN Classification: 345/213.000
Status: 164 - ABANDONED -- FAILURE TO PAY ISSUE FEE
Title: AUTOMATIC PHASE ADJUSTMENT FOR DISPLAY
Start Date: End Date:

bib_fee report (13 items, not sorted)

Acct Date	Seq. Num.	Tran Type	Fee Code	Fee Amount	Mailroom Date	Payment Method
07/31/2008	1	1	1453	$1,540.00	07/30/2008	DA 500439
07/31/2008	2	1	1501	$1,440.00	07/30/2008	DA 500439
07/31/2008	3	1	1504	$300.00	07/30/2008	DA 500439
07/31/2008	4	1	8001	$6.00	07/30/2008	DA 500439
09/24/2007	76	1	1252	$450.00	09/21/2007	CC
11/28/2006	94	1	1801	$790.00	11/27/2006	DA 500439
11/17/2006	41	1	1453	$1,500.00	11/16/2006	CC
03/07/2005	83	1	1801	$790.00	03/04/2005	DA 500439
03/07/2005	84	1	1251	$120.00	03/04/2005	DA 500439
04/26/2002	217	1	581	$40.00	04/18/2002	DA 500439
04/23/2002	52	1	101	$740.00	04/18/2002	DA 500439
04/23/2002	53	1	102	$252.00	04/18/2002	DA 500439
04/23/2002	54	1	103	$234.00	04/18/2002	DA 500439

UNITED STATES PATENT AND TRADEMARK OFFICE

COMMISSIONER FOR PATENTS
UNITED STATES PATENT AND TRADEMARK OFFICE
P.O. BOX 1450
ALEXANDRIA, VA 22313-1450
WWW.USPTO.GOV

Paper No. 8

STEVEN J FUNK
SPRINT CORPORATION
6931 SPRINT PARKWAY
MAILSTOP: KSOPHT0101-Z2100
OVERLAND PARK KS 66251-2100

COPY MAILED
AUG 07 2003
OFFICE OF PETITIONS

In re Application of Everson, et al. Application No. 10/125,948 Filed: April 19, 2002 Attorney Docket No. 1751	: : : : :	ON PETITION

This is a decision on the petition to revive under 37 CFR 1.137(b), filed May 13, 2003 (Certificate of Mailing dated May 8, 2003).

The petition is **GRANTED**.

Petitioner states that the instant nonprovisional application is the subject of a PCT international application filed on March 10, 2003. However, the US Patent and Trademark Office was unintentionally not notified of this filing within 45 days subsequent to the filing of the PCT application.

Applicant filed a "Request to Rescind Previous Nonpublication Request" on March 17, 2003 (Certificate of Mailing under 37 CFR 1.8 dated March 10, 2003, however, the rescission request was not eligible for the benefits of 37 CFR 1.8.[1]). The rescission request did not provide notice of the PCT filing. Accordingly, as the rescission was not made until after the filing of the PCT application, applicant was required by 35 U.S.C. 122(b)(2)(B)(iii) to provide notice of the PCT filing not later than forty-five days after the date the PCT application was filed to avoid abandonment of the application.[2]

---

[1] See "Clarification of the United States Patent and Trademark Office's Interpretation of the Provisions of 35 U.S.C. 122(b)(2)(B)(ii)-(iv)", available at http://www.uspto.gov/web/offices/pac/dapp/opla/preognotice/35usc122b2binterpret.htm.

[2] See id.

In view of the above, this application became abandoned pursuant to 35 USC 122(b)(2)(B)(iii) and 37 CFR 1.213(c) for failure to timely notify the Office of the filing of an application in a foreign country, or under a multilateral international agreement, that requires publication of applications 18 months after filing.

A petition under 37 CFR 1.137(f) must be accompanied by:

(1) the reply, which is met by the notification of such filing in a foreign country or under a multinational treaty;

(2) the petition fee as set forth in 37 CFR 1.17(m); and

(3) a statement that the entire delay in filing the required reply from the due date of the reply until the filing of a grantable petition was unintentional.

The instant petition has been found to be in compliance with 37 CFR 1.137(f). Accordingly, the failure to timely notify the Office of a foreign or international filing within 45 days after the date of filing of such foreign or international application as provided by 35 USC 122(b)(2)(B)(iii) and 37 CFR 1.213(c) is accepted as having been unintentionally delayed.

The previous Request and Certification under 35 USC 122(b)(2)(B)(i) has been rescinded. A Notice Regarding Rescission of Nonpublication Request, which sets forth a projected publication date of November 13, 2003, accompanies this decision on petition.

The file does not indicate a change of address has been submitted, although the address given on the petition differs from the address of record. If appropriate, a change of address should be filed in accordance with MPEP 601.03. A courtesy copy of this decision is being mailed to the address given on the petition; however, the Office will mail all future correspondence solely to the address of record.

The application is being forwarded to Technology Center 2600 for examination.

Telephone inquiries regarding this decision should be directed to the undersigned at (703) 305-0272.

Cliff Congo

Cliff Congo
Petitions Attorney
Office of Petitions

Enc: Notice Regarding Rescission of Nonpublication Request and Notice of Foreign Filing (2 pages)

cc: Lawrence H. Aaronson
McDonnell, Boehnen, Hulbert & Berghoff
300 South Wacker Drive
Chicago, Illinois 60606

UNITED STATES PATENT AND TRADEMARK OFFICE

Commissioner for Patents
United States Patent and Trademark Office
PO Box 1450
Arlington, VA 22313-1450
www.uspto.gov

Paper No. 11

COPY MAILED
JUN 1 8 2003
OFFICE OF PETITIONS

James J. Myrick
748 Greenwood Avenue
Chicago, IL 60022

In re Application of	:	
James J. Myrick	:	
Application No. 10/125,969	:	ON PETITION
Filed: April 19, 2002	:	
Attorney Docket No. JJM011A	:	

This is a decision on the petition under 37 CFR 1.137(b), filed May 29, 2003, to revive the above-identified application.

The petition is **GRANTED**.

The above-identified application became abandoned for failure to reply in a timely manner in reply to the non-final Office action mailed August 15, 2002, which set a shortened statutory period for reply of three months. No extensions of time under the provisions of 37 CFR 1.136 have been obtained. Accordingly, the application became abandoned on November 16, 2002.

Telephone inquiries concerning this decision should be directed to Latrice Bond at (703) 308-6911.

The application file is being forwarded to Technology Center AU 1775 for further processing.

Latrice Bond

Latrice Bond
Paralegal Specialist
Office of Petitions
Office of the Deputy Commissioner
for Patent Examination Policy

UNITED STATES PATENT AND TRADEMARK OFFICE

Commissioner for Patents
United States Patent and Trademark Office
P.O. Box 1450
Alexandria, VA 22313-1450
www.uspto.gov

JAMES J. MYRICK
748 GREENWOOD AVENUE
GLENCOE, IL 60022

COPY MAILED

MAR 09 2005

OFFICE OF PETITIONS

In re Application of	:	
James J. Myrick	:	
Application No. 10/125,969	:	ON PETITION
Filed: April 19, 2002	:	
Attorney Docket No. JJM011	:	

This is a decision on the petition filed November 12, 2004 and supplemented on November 15, 2004, which is being treated under 37 CFR 1.78(a)(3) and 37 CFR 1.78(a)(6), to accept an unintentionally delayed claim under 35 U.S.C. §§ 120, 365(a) and 119(e) for the benefit of prior-filed PCT Application No. PCT/US00/41485, filed October 27, 2000 and provisional Application No. 60/161,838, filed October 27, 1999. This is also a decision on the request for refund filed November 15, 2004.

The petition under 37 CFR 1.78(a)(3) and 1.78(a)(6) is **DISMISSED**.

The request for refund of the request for continued examination (RCE) fee is **GRANTED**.

A petition for acceptance of a claim for late priority under 37 CFR 1.78(a)(3) and 1.78(a)(6) is only applicable to those applications filed on or after November 29, 2000. Further, the petition is appropriate only after the expiration of the period specified in 37 CFR §§ 1.78(a)(2)(ii) and 1.78(a)(5)(ii). In addition, the petition under 37 CFR §§ 1.78(a)(3) and 1.78(a)(6) must be accompanied by:

(1) the reference required by 35 U.S.C. §§ 120 and 119(e) and 37 CFR §§ 1.78(a)(2)(i) and 1.78(a)(5)(i) of the prior-filed application, unless previously submitted;
(2) the surcharge set forth in § 1.17(t); and
(3) a statement that the entire delay between the date the claim was due under 37 CFR §§ 1.78(a)(2)(ii) and 1.78(a)(5)(ii) and the date the claim was filed was unintentional. The Commissioner may require additional where there is a question whether the delay was unintentional.

The instant petition does not comply with item (1).

37 CFR 1.78(a)(2)(i) requires that any nonprovisional application claiming the benefit of one or

more prior-filed copending nonprovisional applications must contain or be amended to contain a reference to each such prior-filed application, identifying it by application number (consisting of the series code and serial number) and indicating the relationship of the applications. The relationship between the applications is whether the subject application is a continuation, divisional, or continuation-in-part of a prior-filed nonprovisional application. An example of a proper benefit claim is: "This application is a continuation of Application No. 10/---, filed---." A benefit claim that merely states: "This application claims the benefit of Application No. 10/---, filed---," does not comply with 37 CFR 1.78(a)(2)(i) since the proper relationship, which includes the type of continuing application, is not stated. Also, the status of each nonprovisional parent application (if it is patented or abandoned) should also be indicated, following the filing date of the parent nonprovisional application. See Manual of Patent Examining Procedure, 8th ed., (August 2001), Section 201.11, Reference to First Application. The Application Data Sheets (ADS's) filed November 12 and 15, 2004 fail to comply with the provisions of 37 CFR 1.78(a)(2)(i) and are therefore unacceptable.

Accordingly, before the petition under 37 CFR 1.78(a)(3) and 1.78(a)(6) can be granted, a renewed petition and a substitute amendment or an Application Data Sheet correcting the above matter is required.

Further correspondence with respect to this matter should be addressed as follows:

By mail: Mail Stop PETITION
Commissioner for Patents
Post Office Box 1450
Alexandria, VA 22313-1450

By hand: Customer Service Window
Randolph Building
401 Dulany Street
Alexandria, VA 22314

By Fax: (703) 872-9306
ATTN: Office of Petitions

Any questions concerning this matter may be directed to Wan Laymon at (571) 272-3220.

Frances Hicks

Frances Hicks
Lead Petitions Examiner
Office of Petitions
Office of the Deputy Commissioner
for Patent Examination Policy

UNITED STATES PATENT AND TRADEMARK OFFICE

Commissioner for Patents
United States Patent and Trademark Office
P.O. Box 1450
Alexandria, VA 22313-1450
www.uspto.gov

JAMES J. MYRICK
748 GREENWOOD AVENUE
CHICAGO, IL 60606

COPY MAILED

AUG 0 4 2005

OFFICE OF PETITIONS

In re Application of
James J. Myrick
Application No: 10/125,969
Filed: April 19, 2002
Attorney Docket No. JJM011

: DECISION ON PETITIONS
: UNDER 37 CFR 1.78(a)(3) AND
: UNDER 37 CFR 1.78(a)(6)

This is a decision on the renewed petition under 37 CFR 1.78(a)(3) and 37 CFR 1.78(a)(6), filed May 25, 2005, , to accept an unintentionally delayed claim under 35 U.S.C. §§ 120, 365(c) and 119(e) for the benefit of the prior-filed applications set forth in the concurrently filed amendment.

The petitions are **GRANTED**.

A petition for acceptance of a claim for late priority under 37 CFR 1.78(a)(3) and 1.78(a)(6) is only applicable to those applications filed on or after November 29, 2000. Further, the petition is appropriate only after the expiration of the period specified in 37 CFR 1.78(a)(2)(ii) and 1.78(a)(5)(ii). In addition, the petition under 37 CFR §§ 1.78(a)(3) and 1.78(a)(6) must be accompanied by:

(1) the reference required by 35 U.S.C. §§ 120 and 119(e) and 37 CFR 1.78(a)(2)(i) and 1.78(a)(5)(i) of the prior-filed application, unless previously submitted;
(2) the surcharge set forth in § 1.17(t); and
(3) a statement that the entire delay between the date the claim was due under 37 CFR 1.78(a)(2)(ii) and 1.78(a)(5)(ii) and the date the claim was filed was unintentional. The Commissioner may require additional where there is a question whether the delay was unintentional.

The instant nonprovisional application was filed after November 29, 2000, and the claim herein for the benefit of priority to the prior-filed applications is submitted after expiration of the period specified in 37 CFR 1.78(a)(2)(iii) and 1.78(a)(5)(iii). Therefore, this is a proper petition under 37 CFR 1.78(a)(3) and 1.78(a)(6).

The petition complies with the requirements for a grantable petition under 37 CFR 1.78(a)(3) and 1.78(a)(6) in that (1) a reference to the prior-filed applications has been included in an Application Data Sheet as provided by 37 CFR 1.78(a)(2)(iii) and 1.78(a)(5)(iii); (2) the surcharge fee required by 37 CFR 1.17(t) has been previously submitted; and (3) the petition contains a proper

statement of unintentional delayed. Accordingly, having found that the instant petition for acceptance of an unintentionally delayed claim for the benefit of priority under 35 U.S.C. §§ 120, 365(c) and 119(e) to the prior-filed applications satisfies the conditions of 37 CFR §§ 1.78(a)(3) and 1.78(a)(6), the petition is granted.

The granting of the petition to accept the delayed benefit claim to the prior-filed applications under 37 CFR 1.78(a)(3) and 1.78(a)(6) should not be construed as meaning that the instant application is entitled to the benefit of the filing date of the prior-filed applications. In order for the instant application to be entitled to the benefit of the prior-filed applications, all other requirements under 35 U.S.C. § 120 and 1.78(a)(1) and (a)(2) and under 35 U.S.C. § 119(e) and 37 CFR 1.78(a)(4) and (a)(5) must be met. Accordingly, the examiner will, in due course, consider this benefit claim and determine whether the instant application is entitled to the benefit of the earlier filing date.

A corrected Filing Receipt, which includes the priority claim to the prior-filed applications, accompanies this decision on petition.

Any inquiries concerning this decision may be directed to Wan Laymon at (571) 272-3220. All other inquiries concerning either the examination procedures or status of the application should be directed to the Technology Center.

This matter is being referred to Technology Center Art Unit 1775 for consideration by the examiner of the claim under 35 U.S.C. § §120, 365(c) and 37 CFR 1.78(a)(2) for the benefit of the prior-filed PCT application, and for consideration of the claim under 35 U.S.C. §119(e) and 37 CFR 1.78(a)(5) for the benefit of the prior-filed provisional application.

As this application is scheduled to issue on August 16, 2005, the printing of the patent has progressed to the point where the new priority data cannot be indicated on the printed patent. Petitioner may request a certificate of correction to correct the front page of the patent to include the new claim for priority.

Frances Hicks

Frances Hicks
Lead Petitions Examiner
Office of Petitions
Office of the Deputy Commissioner
for Patent Examination Policy

ATTACHMENT: Corrected Filing Receipt

UNITED STATES PATENT AND TRADEMARK OFFICE

Commissioner for Patents
United States Patent and Trademark Office
P.O. Box 1450
Alexandria, VA 22313-1450
www.uspto.gov

FEB -7 2005

In re Application of	:	
Richard M. Mathis	:	
Serial No. 10/125,975	:	DECISION ON PETITION
Filed: April 19, 2002	:	TO WITHDRAW AS ATTORNEY
For: SYSTEMS AND METHODS FOR	:	
SKILL GAME AWARDS	:	

By papers filed on June 17, 2004, counsel has petitioned to withdraw as attorney of record in this application.

The petition is GRANTED.

Applicant is advised that the correspondence address for this application is:

Richard M. Mathis
Aurora Enterprises
9773 Lost Colt Circle
Las Vegas, NV 89117

E.R. Kazenske, Director
Technology Center 3700

Townsend and Townsend and Crew, LLP
Two Embarcadero Center, 8th Floor
San Francisco, CA 94111

UNITED STATES PATENT AND TRADEMARK OFFICE

COMMISSIONER FOR PATENTS
UNITED STATES PATENT AND TRADEMARK OFFICE
P.O. BOX 1450
ALEXANDRIA, VA 22313-1450
www.uspto.gov

KING & SPALDING LLP
1180 PEACHTREE STREET
ATLANTA GA 30309

COPY MAILED
JUL 19 2006
OFFICE OF PETITIONS

In re Application of	:	
Chihiro Koike	:	
Application No. 10/125,994	:	
Filed: 22 May, 2006	:	DECISION ON PETITION
Atty Docket No. 10758.105007	:	
REV1005	:	

This is a decision on the petition under 37 CFR 1.137(b),[1] filed on 22 May, 2006, to revive the above-identified application.

The petition is **DISMISSED**.

Any request for reconsideration of this decision must be submitted within TWO (2) MONTHS from the mail date of this decision. Extensions of time under 37 CFR 1.136(a) are permitted. The reconsideration request should include a cover letter entitled "Renewed Petition Under 37 CFR 1.137(b)." This is not a final agency decision.

---

[1] Effective December 1, 1997, the provisions of 37 CFR 1.137(b) now provide that where the delay in reply was unintentional, a petition may be filed to revive an abandoned application or a lapsed patent pursuant to 37 CFR 1.137(b). A grantable petition filed under the provisions of 37 CFR 1.137(b) must be accompanied by:

(1) the required reply, unless previously filed. In a nonprovisional application abandoned for failure to prosecute, the required reply may be met by the filing of a continuing application. In a nonprovisional application filed on or after June 8, 1995, and abandoned for failure to prosecute, the required reply may also be met by the filing of a request for continued examination in compliance with § 1.114. In an application or patent, abandoned or lapsed for failure to pay the issue fee or any portion thereof, the required reply must be the payment of the issue fee or any outstanding balance thereof. In an application abandoned for failure to pay the publication fee, the required reply must include payment of the publication fee.

(2) the petition fee as set forth in 37 CFR 1.17(m);

(3) a statement that the entire delay in filing the required reply from the due date for the reply until the filing of a grantable petition pursuant to 37 CFR 1.137(b) was unintentional. The Commissioner may required additional information where there is a question whether the delay was unintentional; and

(4) any terminal disclaimer (and fee as set forth in 37 CFR 1.20(d)) required pursuant to 37 CFR 1.137(c)).

This application became abandoned on 17 February, 2006, for failure to file a proper reply to the final Office action mailed on 16 November, 2005, which set a three (3) month shortened statutory period for reply. No extensions of the time for reply were filed in accordance with 37 CFR 1.136(a). On 23 January, 2006 (certificate of mailing date 17 January, 2006), an amendment after final rejection was filed. However, the amendment was determined not to place the application in *prima facie* condition for allowance. On 17 February, 2006, an Advisory Action stating that the period for reply expires three (3) months from the date of mailing thereof was mailed.

The petition lacks the required reply. The only proper reply to a final Office action is a Notice of Appeal and fee, Request for Continuing Examination and submission under 37 CFR 1.114, a continuing application, or an amendment placing the application in *prima facie* condition for allowance. No reply other than an extension of time was filed with the present petition, and an extension of time is not a proper reply.

Additionally, the extension of time filed with a certificate of mailing date 17 May, 2006, was filed more than six (6) months after the mailing date of the final rejection mailed on 16 November, 2005. As the final rejection set a three (3) month shortened statutory period for reply, the latest date a timely reply could have been filed was 16 May, 2006. Therefore, the extension of time is untimely and cannot be accepted.

An extension of time under 37 CFR 1.136 must be filed prior to the expiration of the maximum extendable period for reply.[2] The three-month extension request filed on 22 May, 2006 (certificate of mailing date 17 May, 2006), was submitted after 16 May, 2006, which was the last day of the three (3) month shortened statutory period for reply to the Office action mailed on 16 November, 2005, and therefore is unnecessary. The extension of time fee paid on 22 May, 2006, will be credited to counsel's deposit account as authorized.

Further correspondence with respect to this matter should be addressed as follows:

By mail: Mail Stop Petition
Commissioner for Patents
P.O. Box 1450
Alexandria, VA 22313-1450

---

[2] See In re Application of S., 8 USPQ2d 1630, 1631 (Comm'r Pats. 1988).

By FAX: (571) 273-8300
Attn: Office of Petitions

By hand: Customer Service Window
Mail Stop Petition
Randolph Building
401 Dulany Street
Alexandria, VA 22314

Telephone inquiries concerning this matter may be directed to the undersigned at (571) 272-3231.

D Wood

Douglas I. Wood
Senior Petitions Attorney
Office of Petitions

UNITED STATES PATENT AND TRADEMARK OFFICE

Commissioner for Patents
United States Patent and Trademark Office
P.O. Box 1450
Alexandria, VA 22313-1450
www.uspto.gov
DIW Nov-06

KING & SPALDING LLP
1180 PEACHTREE STREET
ATLANTA GA 30309

COPY MAILED
NOV 21 2006
OFFICE OF PETITIONS

In re Application of	:	
Chihiro Koike	:	
Application No. 10/125,994	:	
Filed: 19 April, 2002	:	DECISION ON PETITION
Atty Docket No. 10758.105007	:	
REV1005	:	

This is a decision on the renewed petition under 37 CFR 1.137(b),[1] filed on 14 September, 2006, to revive the above-identified application.

The petition is **GRANTED**.

This application became abandoned on 17 February, 2006, for failure to file a proper reply to the final Office action mailed on 16 November, 2005, which set a three (3) month shortened statutory period for reply. No extensions of the time for reply were filed in accordance with 37 CFR 1.136(a). On 23 January, 2006 (certificate of mailing date 17 January, 2006), an amendment after final rejection was filed. However, the amendment was

---

[1] Effective December 1, 1997, the provisions of 37 CFR 1.137(b) now provide that where the delay in reply was unintentional, a petition may be filed to revive an abandoned application or a lapsed patent pursuant to 37 CFR 1.137(b). A grantable petition filed under the provisions of 37 CFR 1.137(b) must be accompanied by:

(1) the required reply, unless previously filed. In a nonprovisional application abandoned for failure to prosecute, the required reply may be met by the filing of a continuing application. In a nonprovisional application filed on or after June 8, 1995, and abandoned for failure to prosecute, the required reply may also be met by the filing of a request for continued examination in compliance with § 1.114. In an application or patent, abandoned or lapsed for failure to pay the issue fee or any portion thereof, the required reply must be the payment of the issue fee or any outstanding balance thereof. In an application abandoned for failure to pay the publication fee, the required reply must include payment of the publication fee.

(2) the petition fee as set forth in 37 CFR 1.17(m);

(3) a statement that the entire delay in filing the required reply from the due date for the reply until the filing of a grantable petition pursuant to 37 CFR 1.137(b) was unintentional. The Commissioner may required additional information where there is a question whether the delay was unintentional; and

(4) any terminal disclaimer (and fee as set forth in 37 CFR 1.20(d)) required pursuant to 37 CFR 1.137(c)).

determined not to place the application in *prima facie* condition for allowance. On 17 February, 2006, an Advisory Action stating that the period for reply expires three (3) months from the date of mailing thereof was mailed. The petition filed on 22 May, 2006, was dismissed on 19 July, 2006. Notice of Abandonment was mailed on 19 September, 2006.

Petitioner states, in the renewed petition, that a continuation application has been filed. As such, the renewed petition will be treated as a request to revive the instant application for copendency with a continuation application. A review of Office PALM records reveals that continuation application No. 11/434,628 was filed on 16 May, 2006.

Since this application is revived for purposes of continuity only with continuing Application No. 11/434,628, filed on 16 May, 2006, and since continuity has been established by this decision reviving the application, the application is again abandoned in favor of the above-referenced application.

Telephone inquiries concerning this matter may be directed to the undersigned at (571)272-3231.

D Wood

Douglas I. Wood
Senior Petitions Attorney
Office of Petitions

UNITED STATES PATENT AND TRADEMARK OFFICE

Commissioner for Patents
United States Patent and Trademark Office
P.O. Box 1450
Alexandria, VA 22313-1450
www.uspto.gov

Law Offices of John D. Gugliotta, P.E., Esq.
202 Delaware Building
137 South Main Street
Akron, OH 44308

In re Application of	:	
John Dougherty	:	
Application No. 10/126,009	:	DECISION ON PETITION UNDER
Application Filing Date: December 1, 2000	:	37 CFR 1.137(f)
Attorney Docket No. 950		

This is a decision on the petition under 37 CFR 1.137(f), filed August 23, 2004, to revive the instant non-provisional application.

The petition under 37 CFR 1.137(f) is granted.

This application became abandoned pursuant to 35 U.S.C. § 122(b)(2)(B(iii) for failure to timely notify the Office of the filing of an application in a foreign country.

A petition under 37 CFR 1.137(f) must be accompanied by: (1) the reply which is met by the notification of such filing in a foreign country or under a multinational treaty[1]; (2) the petition fee as set forth in 37 CFR 1.17(m), and (3) a statement that the entire delay in filing the required reply from the due date of the reply until the filing of a grantable petition was unintentional. The Commissioner may require additional information where there is a question whether the delay was unintentional.

The instant petition is found in compliance with 37 CFR 1.137(f).

Accordingly, the failure to timely notify the Office of a foreign filing within 45 days as provided by 35 U.S.C. § 122(b)(2)(B)(iii) is accepted as having been unintentionally delayed.

It is noted that the application remains in an abandoned status because of the applicant's alleged failure to file a timely and proper response to the final Office action mailed March 16, 2004. The "Petition to Withdraw the Holding of Abandonment" filed November 19, 2004, is noted, however; the petition must be treated in the appropriate technology center.

[1] The filing of a petition under this section will not relieve applicant of his obligation to reply to any outstanding Office action.

Accordingly, the application file will be directed to the Technology Center 3700, GAU 3723 for treatment of the "Petition to Withdraw the Holding of Abandonment." Thereafter, a Corrected Filing Receipt will be issued setting forth the projected publication date.

Further inquiries regarding this decision may be directed to the undersigned at (571)272-3222.

Kenya A. McLaughlin

Kenya A. McLaughlin
Petitions Attorney
Office of Petitions

UNITED STATES
PATENT AND
TRADEMARK OFFICE

UNDER SECRETARY OF COMMERCE FOR INTELLECTUAL PROPERTY AND
DIRECTOR OF THE UNITED STATES PATENT AND TRADEMARK OFFICE
WASHINGTON, D.C. 20231
WWW.USPTO.GOV

JUN 25 2003

#5

GEORGE A. LEONE
2150 128th AVE. N.W.
MINNEAPOLIS, MN 55448

In re Application of	:	
Alan C. Nelson	:	DECISION ON PETITION
Serial No.10/126,026	:	TO MAKE SPECIAL
Filed: April 19, 2002	:	
For: Variable-Motion Optical	:	
Tomography of Small Objects	:	

This is in response to applicants' petition filed on June 6, 2003, to make the above-identified application special under the provisions of 37 CFR 1.102(a), as it relates to Cancer.

Applicant has satisfied the provisions set forth in M.P.E.P. 708.02(X). Therefore the petition is **GRANTED**.

The application will be forwarded to the examiner for action on the merits commensurate with this decision.

Should there be any questions with regard to this letter please contact John Kittle by letter addressed to the Director, Technology Center 3700/2900, Washington, DC 20231, or by telephone at (703)308-0873 or by facsimile transmission at (703)308-3139.

John E. Kittle
Director
Technology Center 3700/2900

UNITED STATES PATENT AND TRADEMARK OFFICE

Commissioner for Patents
United States Patent and Trademark Office
P.O. Box 1450
Alexandria, VA 22313-1450
www.uspto.gov

WILSON T. CRANDALL
113 OAMTOWN ROAD
FT. DEFIANCE, VA 24437

COPY MAILED

AUG 1 1 2004

OFFICE OF PETITIONS

In re Application of	:	
Crandall, Wilson T.	:	
Application No. 10/126,034	:	ON PETITION
Filed: April 19, 2002	:	
For: Method For Topical Treatment Of Carpal Tunnel Syndrome	:	

This is a decision on the petition under 37 C.F.R. § 1.137(b), filed July 30, 2004, to revive the above-identified application.

The petition is **DISMISSED AS MOOT**.

A review of the above-identified application shows that the petitioner timely and properly submitted a response on July 8, 2002 to the Notice to File Missing Parts of Nonprovisional Application mailed on May 31, 2002. Accordingly, as the above-identified application is pending, the instant petition submitted on July 30, 2004 is unnecessary and the petition fee of $55.00 will be refunded to petitioner via treasury check.

The application is now ready for examination and has been docketed to an Examiner in Technology Center 1600 for review.

Telephone inquiries regarding this decision should be directed to the undersigned at (703) 306-0482. Any telephone inquiries after approximately **September 24, 2004** should be directed to the undersigned at (571) 272-3282.

Liana Chase
Petitions Examiner
Office of Petitions
Office of the Deputy Commissioner
for Patent Examination Policy

UNITED STATES PATENT AND TRADEMARK OFFICE

Commissioner for Patents
United States Patent and Trademark Office
P.O. Box 1450
Alexandria, VA 22313-1450
www.uspto.gov

WILSON T CRANDALL
P O BOX 346
VERONA, VA 24482

COPY MAILED

MAY 17 2005

OFFICE OF PETITIONS

In re Application of	:	
Crandall, Wilson T.	:	
Application No. 10/126,034	:	ON PETITION
Filed: April 19, 2002	:	
Title: Method For Topical Treatment Of Carpal Tunnel Syndrome	:	

This is a decision on the petition under 37 C.F.R. § 1.137(b), filed May 2, 2005, to revive the above-identified application.

The petition is **GRANTED.**

The above-identified application became abandoned for failure to submit the issue fee and publication fee in a timely manner in reply to the Notice of Allowance mailed December 15, 2004, which set a statutory period for reply of three (3) months. Accordingly, the above-identified application became abandoned on March 16, 2005.

Petitioner has met the requirements to revive the above-identified application pursuant to 37 CFR 1.137(b).

This matter is being referred to the Publishing Division for processing into a patent.

Telephone inquiries regarding this decision should be directed to the undersigned at (571) 272-3282.

Liana Chase
Petitions Examiner
Office of Petitions
Office of the Deputy Commissioner
for Patent Examination Policy

UNITED STATES PATENT AND TRADEMARK OFFICE

Commissioner for Patents
United States Patent and Trademark Office
P. O. Box 1450
Alexandria, VA 22313-1450
www.uspto.gov

Paper No. 4

Samuel L. Borkowsky
Los Alamos National Laboratory
PO Box 1663, MS A187
Los Alamos, NM 87545

COPY MAILED

JUL 0 8 2003

OFFICE OF PETITIONS

In re Application of
Jonathan Phillips et al.
Application No. 10/126,039
Filed: April 18, 2002
Attorney Docket No. S-97,727

DECISION GRANTING PETITION
UNDER 37 CFR 1.137(b)

This is a decision on the petition, filed June 6, 2003, under 37 CFR 1.137(f), which is being treated as a petition under 37 CFR 1.137(b) to revive the instant nonprovisional application.

The petition is **GRANTED**.

Petitioner states that the instant nonprovisional application is the subject of an application filed in a foreign country on April 9, 2003. However, the U.S. Patent and Trademark Office was unintentionally not notified of this filing within 45 days subsequent to the filing of the subject application in a foreign country.

In view of the above, this application became abandoned pursuant to 35 U.S.C. § 122(b)(2)(B)(iii) and 37 CFR 1.213(c) for failure to timely notify the Office of the filing of an application in a foreign country, or under a multilateral international agreement, that requires publication of applications 18 months after filing.

A petition under 37 CFR 1.137(b) to revive for failure to timely notify the Office of the filing of an application in a foreign country must be accompanied by:

(1) the reply which is met by the notification of such filing in a foreign country or under a multinational treaty;

(2) the petition fee as set forth in 37 CFR 1.17(m); and

(3) a statement that the entire delay in filing the required reply from the due date of the reply until the filing of a grantable petition was unintentional.

The instant petition has been found to be in compliance with 37 CFR 1.137(b). Accordingly, the failure to timely notify the Office of a foreign or international filing within 45 days after the date of filing of such foreign or international application as provided by 35 U.S.C. § 122(b)(2)(B)(iii) and 37 CFR 1.213(c)is accepted as having been unintentionally delayed.

The previous Request and Certification under 35 U.S.C. § 122(b)(2)(B)(i) has been rescinded. A Notice Regarding Rescission of Nonpublication Request which sets forth the projected publication date of October 23, 2003 accompanies this decision on petition.

It is noted that the address given on the petition differs slightly from the address of record. If appropriate, a change of address should be filed in accordance with MPEP 601.03. A courtesy copy of this decision is being mailed to the address given on the petition; however, the Office will mail all future correspondence solely to the address of record.

Any inquiries concerning this decision may be directed to Latrice Bond at (703) 308-6911.

This application is being forwarded to Technology Center Art Unit 1742 for examination in due course.

Latrice Bond

Latrice Bond
Paralegal Specialist
Office of Petitions
Office of the Deputy Commissioner
for Patent Examination Policy

Frances Hicks

Frances Hicks
Lead Petitions Examiner

ATTACHMENT: Notice Regarding Rescission of Nonpublication Request

cc: Samuel L. Borkowsky
Los Alamos National Laboratory
LC/IP, MS A187
Los Alamos, NM 87545

UNITED STATES PATENT AND TRADEMARK OFFICE

Commissioner for Patents
United States Patent and Trademark Office
P.O. Box 1450
Alexandria, VA 22313-1450
www.uspto.gov

Mark B. Wilson
Fulbright & Jaworski LLP
Suite 2400
600 Congress Avenue
Austin, Texas 78701

COPY MAILED

JUN 3 0 2005

OFFICE OF PETITIONS

In re Application of
Rodelet
Application No. 10/126,048
Patent No.: 6,849,279
Filed: April 19, 2002
Attorney Docket No. BDAC:005US

: DECISION GRANTING PETITION

This decision is in response to applicants' "PETITION REQUESTING PATENT TERM ADJUSTMENT" TIMELY[1] filed on March 21, 2005 requesting that the Office remove the reduction of 36 days to the PTA that was assessed at the time of the issuance of the patent and determined that the correct PTA at the time of the issuance of the patent is four hundred and fifty-two (452) days.

Applicant's request for PTA is **GRANTED.** The Office will *sua sponte* issue a certificate of correction changing the PTA from four hundred and sixteen (416) days to a determination of four hundred and fifty-two (452). The Office will also adjust the PAIR calculation to reflect this decision. A copy of the adjusted PAIR calculation will accompany this decision.

Applicants argue that the Office improperly assessed a thirty-six day reduction for the submission of an oath or declaration after the mailing of the notice of allowance.[2] Applicant asserts the submission of the oath should not have been a failure to engage in reasonable efforts to conclude prosecution of the application since applicant was complying with the examiner's request.

Applicants arguments have been considered. The Office does not deem this petition a grantable petition based upon applicants' arguments but nonetheless finds the petition patentable. If applicant had not previously submitted such oath or declaration, then the submission of the oath or declaration after the mailed notice of allowance would have been considered a failure to engage under 37 CFR 1.704(c)(10). Applicant appears to be arguing that the fact the submission was an excused supplemental paper filed under 37 CFR 1.704(c)(8) because the examiner expressly requested such paper. However, the fact that the examiner expressly requested that the oath be submitted is material only to the extent that what examiner was requesting was a copy of the original filed oath or declaration that was filed on August 6, 2002. Because the Office lost the

---

[1] Patent issued on February 1, 2005.

[2] The reduction was assessed from the date of submission, November 8, 2004, until the date of the response to such submission, 12/13/2004, inclusive of both days.

original copy of the oath or declaration and the examiner requested a copy of original filed oath or declaration, the Office does not deem the submission of a copy of the oath or declaration after the mail date of the notice of allowance to be considered a failure to engage in reasonable efforts to conclude prosecution of the application. Accordingly, the assessment of a reduction for the submission of the copy of the oath or declaration after the mailing of the notice of allowance is an error. The Office notes that applicants had accrued four hundred and fifty-two days for the Office's failure to initially act upon the application within fourteen months of the filing of the application. See 37 CFR 1.702(a)(1). Accordingly, the correct amount of PTA at the time of the issuance of the patent is 452 (452-0=452) days.

After the mailing of this decision, this application will be forwarded to the Office of Patent Publications, certificate of Correction branch, for a prompt issuance of the certificate of correction.

Applicant has submitted the $200.00 fee for this application. No additional fees are required.

Any questions concerning this decision should be directed to Kery A. Fries, Senior Legal Advisor, Office of Patent Legal Administration at 571-272-7757.

Kery A Fries
/pg

Karin Ferriter
Senior Legal Advisor
Office of Deputy Commissioner
for Patent Examination Policy

CC: Draft copy of certificate of correction
Copy of Adjusted Pair Calculation

UNITED STATES PATENT AND TRADEMARK OFFICE

COMMISSIONER FOR PATENTS
UNITED STATES PATENT AND TRADEMARK OFFICE
WASHINGTON, D.C. 20231
www.uspto.gov

Paper No. 4

HEWLETT-PACKARD COMPANY
Intellectual Property Administration
P.O. Box 272400
Fort Collins, CO 80527-2400

COPY MAILED

OFFICE OF PETITIONS

In re Application of	:	
Mann	:	
Application No. 10/126,090	:	DECISION GRANTING
Filed: April 19, 2002	:	PETITION
Attorney Docket No. 10010948-1	:	

This is a decision on the petition filed August 13, 2002, to establish that page 10 of the specification was part of the originally filed application.

On April 19, 2002, the application was filed.

On June 4, 2002, the Office of Initial Patent Examination mailed a "Notice of Omitted Item(s)" stating that the application had been accorded a filing date of April 19, 2002, and advising applicant that page 10 of the specification appeared to have been omitted.

In response, the present petition was filed alleging that page 10 was deposited on April 19, 2002. In support, petitioner has submitted a postcard receipt which acknowledges receipt of "67 pages of specifications" on April 19, 2002.[1] Petitioner has also submitted a copy of the missing documentation- page 10 of the specification.

Upon review of the record, page 10, deposited on April 19, 2002, has not been located. However, the evidence is convincing that the application papers deposited on April 19, 2002, included page 10, and that page 10 was subsequently misplaced in the PTO.

In view of the above, the petition is **granted**. The copy of page 10 submitted with the petition will be used for examination purposes.

The petition fee of $130 will be credited to deposit account no. 08-2025.

The Notice mailed June 4, 2002 is hereby vacated to the extent that the Notice states page 10 was omitted.

The Application is being returned to the Office of Initial Patent Examination for further processing with a filing date of April 19, 2002, using the application papers filed on April 19, 2002, and the copy of page 10 of the specification filed on August 13, 2002.

---

[1] Evidence of receipt of any correspondence filed in the Patent and Trademark Office can be obtained by submitting a self addressed post card properly itemizing and identifying the paper or papers being filed. Upon receipt of the correspondence, the Patent and Trademark Office will check the listing on the post card against the papers submitted, making sure that all items listed are present and will then stamp the postcard with an Official date stamp and place the post card in the outgoing mail. "A post card receipt which itemizes and properly identifies the papers which are being filed serves as *prima facie* evidence of receipt in the PTO of all items listed thereon by the PTO." M.P.E.P. § 503.

Telephone inquiries should be directed to Petitions Attorney Steven Brantley at (703) 306-5683.

Charles Steven Brantley
Petitions Attorney
Office of Petitions
Office of the Deputy Commissioner
for Patent Examination Policy

UNITED STATES PATENT AND TRADEMARK OFFICE

UNITED STATES DEPARTMENT OF COMMERCE
United States Patent and Trademark Office
Address: COMMISSIONER FOR PATENTS
P.O. Box 1450
Alexandria, Virginia 22313-1450
www.uspto.gov

TEXAS INSTRUMENTS INCORPORATED
P O BOX 655474, M/S 3999
DALLAS, TX 75265

Mail Date: 06/24/2010

Applicant	: Andrea Bonelli	: DECISION ON REQUEST FOR
Patent Number	: 7639745	: RECALCULATION of PATENT
Issue Date	: 12/29/2009	: TERM ADJUSTMENT IN VIEW
Application No	: 10/126,142	: OF WYETH AND NOTICE OF INTENT TO
Filed	: 04/19/2002	: ISSUE CERTIFICATE OF CORRECTION
		:

The Request for Recalculation is **GRANTED** to the extent indicated.

The patent term adjustment has been determined to be **2231** days. The USPTO will *sua sponte* issue a certificate of correction reflecting the amount of PTA days determined by the recalculation.

Prior to the issuance of the certificate of correction, the USPTO will afford patentee an opportunity to be heard and request reconsideration. Accordingly, patentee has **one month or thirty (30) days**, whichever is longer, to file a request for reconsideration of this patent term adjustment calculation. See 35 U.S.C. 154(b)(3)(B)(ii) and 37 CFR 1.322(a)(4). No extensions of time will be granted under 37 CFR 1.136.

Patentee should use document code PET.OP if electronically filing a request for reconsideration of this patent term adjustment calculation. The patentee must also include the information required by 37 CFR 1.705(b)(2) and the fee required by 37 CFR 1.18(e). If patentee does not file a timely request for reconsideration of this patent term adjustment calculation including the information required by 37 CFR 1.705(b)(2) and the fee required by 37 CFR 1.18(e), the USPTO will issue a certificate of correction reflecting the PTA determination noted above.

Patentee should be aware that in order to preserve the right to review in the United States District Court for the District of Columbia of the USPTO patent term adjustment determination, patentee must ensure that he or she also take the steps required under 35 U.S.C. 154(b)(4)(A) in a timely manner. Nothing in the request for recalculation should be construed as providing an alternative time frame for commencing a civil action under 35 U.S.C. 154(b)(4)(A).

Any questions concerning this decision should be directed to the Office of Patent Legal Administration at 571-272-7702.

SPE RESPONSE FOR CERTIFICATE OF CORRECTION

Paper No.: _____

DATE : 05-11-09

TO SPE OF : ART UNIT 1637

SUBJECT : Request for Certificate of Correction for Appl. No.: 10/126195 Patent No.: 6887668

Please respond to this request for a certificate of correction within 7 days.

FOR IFW FILES:

Please review the requested changes/corrections as shown in the **COCIN** document(s) in the IFW application image. No new matter should be introduced, nor should the scope or meaning of the claims be changed.

Please complete the response (see below) and forward the completed response to scanning using document code **COCX**.

FOR PAPER FILES:

Please review the requested changes/corrections as shown in the attached certificate of correction. Please complete this form (see below) and forward it with the file to:

Certificates of Correction Branch (CofC)
South Tower - 9A22
Palm Location 7580

Angela Green
Certificates of Correction Branch
703-756-1541

Thank You For Your Assistance

The request for issuing the above-identified correction(s) is hereby:
Note your decision on the appropriate box.

- ☒ **Approved** — **All** changes apply.
- ☐ **Approved in Part** — Specify below which changes **do not** apply.
- ☐ **Denied** — State the reasons for denial below.

Comments: Note correction requested at column 2, line 54 should read at line 55

SPE 1637 Art Unit

UNITED STATES PATENT AND TRADEMARK OFFICE

Commissioner for Patents
United States Patent and Trademark Office
P.O. Box 1450
Alexandria, VA 22313-1450
www.uspto.gov

BLAKLEY, SOKOLOFF,
TAYLOR & ZAFMAN LLP
SEVENTH FLOOR
12400 WILSHIRE BOULEVARD
LOS ANGELES CA 90025-1026

COPY MAILED

JUL 26 2007

OFFICE OF PETITIONS

In re Application of	:	
Dave ROBERTS, et al	:	
Application No. 10/126,209	:	DECISION ON PETITION
Filed: April 19, 2002	:	TO WITHDRAW
Attorney Docket No. 6065P002	:	FROM RECORD
	:	

This is a decision on the Request to Withdraw as attorney or agent of record under 37 C.F.R. § 1.36(b), filed October 11, 2006.

The request is **NOT APPROVED**.

The request cannot be approved because no reasons for withdrawal have been provided. The Office cannot, at this time, determine whether practitioner's request is one of the mandatory or permissive reasons enumerated in 37 CFR 10.40. Any subsequent requests must include reasons for withdrawal. Please note that there is a space provided for on PTO/SB/83 (Request to Withdraw as Attorney or Agent) to supply practitioner's reasons.

All future communications from the Office will continue to be directed to the above-listed address until otherwise notified by applicant.

There is an outstanding Office action mailed July 13, 2007 that requires a reply by the applicant.

Telephone inquiries concerning this decision should be directed to Diane Goodwyn at 571-272-6735.

April Wise
Petitions Examiner
Office of Petitions

cc: GUERLIN & RODRIGUEZ, LLP
5 MOUNT ROYAL AVENUE
MARLBOROUGH, MA 01752

UNITED STATES PATENT AND TRADEMARK OFFICE

Commissioner for Patents
United States Patent and Trademark Office
P.O. Box 1450
Alexandria, VA 22313-1450
www.uspto.gov

NORTEL NETWORKS LIMITED
8200 DIXIE ROAD
BRAMPTON, ONTARIO,
CANADA L6T 5P6

COPY MAILED

JUL 26 2007

OFFICE OF PETITIONS

In re Application of :
Dave ROBERTS, et al :
Application No. 10/126,209 :
Filed: April 19, 2002 :
Attorney Docket No. NOR-135 (179501KUS01U) :

DECISION ON REQUEST FOR REVOCATION OF POWER OF ATTORNEY

This is a decision on the Request to Revoke the attorney or agent of record under 37 C.F.R. § 1.36(a), filed November 6, 2006.

The request is **NOT APPROVED**.

A power of attorney, pursuant to § 1.32(b), may be revoked at any stage in the proceeding of a case by an applicant for patent (§ 1.41(b)) or an assignee of the entire interest of the applicant under § 3.71(b). Fewer than all of the applicants (or by fewer than the assignee of the entire interest of the applicant) may only revoke the power of attorney upon a showing of sufficient cause, and payment of the petition fee set forth § 1.17(h). For the assignee to take action a proper statement under § 3.73(b) is required.

The request cannot be approved because the statement under 3.73(b) is improper.

All future communications from the Office will continue to be directed to the above-listed address until otherwise notified by applicant.

Telephone inquiries concerning this decision should be directed to Diane Goodwyn at 571-272-6735.

April Wise
Petitions Examiner
Office of Petitions

UNITED STATES PATENT AND TRADEMARK OFFICE

Commissioner for Patents
United States Patent and Trademark Office
P.O. Box 1450
Alexandria, VA 22313-1450
www.uspto.gov

In re Patent No. 6719450
Issue Date: April 13,2004
Application No. 10126221
Filed: April 19,2002
Attorney Docket No. BONJP001US

:
:DECISION GRANTING PETITION
:UNDER 37 CFR 1.378(c)
:

This is a decision on the electronic petition, filed June 20,2008 ,under 37 CFR 1.378(c) to accept the unintentionally delayed payment of the 3.5 year maintenance fee for the above-identified patent.

The petition is GRANTED.

The maintenance fee is accepted, and the above-identified patent reinstated as of June 20,2008 . This decision also constitutes notice that the fee has been accepted. An electronic copy of the petition and this decision has been created as an entry in an Image File Wrapper. Nevertheless, petitioner should print and retain an independent copy

Telephone inquires related to this electronic decision should be directed to the Electronic Business Center at 1-866-217-9197.

Under the Paperwork Reduction Act of 1995, no persons are required to respond to a collection of information unless it displays valid OMB control number.

PETITION TO ACCEPT UNINTENTIONALLY DELAYED PAYMENT OF MAINTENANCE FEE IN AN EXPIRED PATENT (37 CFR 1.378(c))

Patent Number	Issue Date (YYYY-MM-DD)	Application Number	Filing Date (YYYY-MM-DD)	Docket Number (if applicable)
6719450	2004-04-13	10126221	2002-04-19	BONJ001US

CAUTION: Maintenance fee (and surcharge, if any) payment must correctly identify: (1) the patent number and (2) the application number of the actual U.S. application leading to issuance of that patent to ensure the fee(s) is/are associated with the correct patent. 37 CFR 1.366(c) and (d).

SMALL ENTITY
☐ Patentee claims, or has previously claimed, small entity status. See 37 CFR 1.27.

LOSS OF ENTITLEMENT TO SMALL ENTITY STATUS
☒ Patentee is no longer entitled to small entity status. See 37 CFR 1.27(g)

NOT Small Entity		Small Entity	
Fee	Code	Fee	Code
◉ 3 ½ year	(1551)	○ 3 ½ year	(2551)
○ 7 ½ year	(1552)	○ 7 ½ year	(2552)
○ 11 ½ year	(1553)	○ 11 ½ year	(2553)

SURCHARGE
The surcharge required by 37 CFR 1.20(i)(2) (Fee Code 1558) must be paid as a condition of accepting unintentionally delayed payment of the maintenance fee.

MAINTENANCE FEE (37 CFR 1.20(e)-(g))
The appropriate maintenance fee must be submitted with this petition.

STATEMENT
THE UNDERSIGNED CERTIFIES THAT THE DELAY IN PAYMENT OF THE MAINTENANCE FEE TO THIS PATENT WAS UNINTENTIONAL

PETITIONER(S) REQUEST THAT THE DELAYED PAYMENT OF THE MAINTENANCE FEE BE ACCEPTED AND THE PATENT REINSTATED

THIS PORTION MUST BE COMPLETED BY THE SIGNATORY OR SIGNATORIES

37 CFR 1.378(d) states: "Any petition under this section must be signed by an attorney or agent registered to practice before the Patent and Trademark Office, or by the patentee, the assignee, or other party in interest."

I certify, in accordance with 37 CFR 1.4(d)(4) that I am

◉ An attorney or agent registered to practice before the Patent and Trademark Office

○ A sole patentee

○ A joint patentee; I certify that I am authorized to sign this submission on behalf of all the other patentees.

○ A joint patentee; all of whom are signing this e-petition

○ The assignee of record of the entire interest

Patent Practitioner			
A signature of the applicant or representative is required in accordance with 37 CFR 1.33 and 10.18. Please see 37 CFR 1.4(d) for the form of the signature			
Signature	/Edward_S-Sherman/	Date (YYYY-MM-DD)	2008-06-20
Name	Edward S. Sherman	Registration Number	43115

This collection of information is required by 37 CFR 1.378(c). The information is required to obtain or retain a benefit by the public which is to file (and by the USPTO to process) an application. Confidentiality is governed by 35 U.S.C. 122 and 37 CFR 1.11 and 1.14. This collection is estimated to take 1 hour to complete, including gathering, preparing, and submitting the completed application form to the USPTO. Time will vary depending upon the individual case. Any comments on the amount of time you require to complete this form and/ or suggestions for reducing this burden, should be sent to the Chief Information Officer, U.S. Patent and Trademark Office, U.S. Department of Commerce, P.O. Box 1450, Alexandria, VA 22313-1450. DO NOT SEND FEES OR COMPLETED FORMS TO THIS ADDRESS. **This form can only be used when in conjunction with EFS-Web. If this form is mailed to the USPTO, it may cause delays in reinstating the patent.**

Privacy Act Statement

The Privacy Act of 1974 (P.L. 93-579) requires that you be given certain information in connection with your submission of the attached form related to a patent application or patent. Accordingly, pursuant to the requirements of the Act, please be advised that: (1) the general authority for the collection of this information is 35 U.S.C. 2(b)(2); (2) furnishing of the information solicited is voluntary; and (3) the principal purpose for which the information is used by the U.S. Patent and Trademark Office is to process and/or examine your submission related to a patent application or patent. If you do not furnish the requested information, the U.S. Patent and Trademark Office may not be able to process and/or examine your submission, which may result in termination of proceedings or abandonment of the application or expiration of the patent.

The information provided by you in this form will be subject to the following routine uses:

1. The information on this form will be treated confidentially to the extent allowed under the Freedom of Information Act (5 U.S.C. 552) and the Privacy Act (5 U.S.C. 552a). Records from this system of records may be disclosed to the Department of Justice to determine whether the Freedom of Information Act requires disclosure of these record s.

2. A record from this system of records may be disclosed, as a routine use, in the course of presenting evidence to a court, magistrate, or administrative tribunal, including disclosures to opposing counsel in the course of settlement negotiations.

3. A record in this system of records may be disclosed, as a routine use, to a Member of Congress submitting a request involving an individual, to whom the record pertains, when the individual has requested assistance from the Member with respect to the subject matter of the record.

4. A record in this system of records may be disclosed, as a routine use, to a contractor of the Agency having need for the information in order to perform a contract. Recipients of information shall be required to comply with the requirements of the Privacy Act of 1974, as amended, pursuant to 5 U.S.C. 552a(m).

5. A record related to an International Application filed under the Patent Cooperation Treaty in this system of records may be disclosed, as a routine use, to the International Bureau of the World Intellectual Property Organization, pursuant to the Patent Cooperation Treaty.

6. A record in this system of records may be disclosed, as a routine use, to another federal agency for purposes of National Security review (35 U.S.C. 181) and for review pursuant to the Atomic Energy Act (42 U.S.C. 218(c)).

7. A record from this system of records may be disclosed, as a routine use, to the Administrator, General Services, or his/her designee, during an inspection of records conducted by GSA as part of that agency's responsibility to recommend improvements in records management practices and programs, under authority of 44 U.S.C. 2904 and 2906. Such disclosure shall be made in accordance with the GSA regulations governing inspection of records for this purpose, and any other relevant (i.e., GSA or Commerce) directive. Such disclosure shall not be used to make determinations about individuals.

8. A record from this system of records may be disclosed, as a routine use, to the public after either publication of the application pursuant to 35 U.S.C. 122(b) or issuance of a patent pursuant to 35 U.S.C. 151. Further, a record may be disclosed, subject to the limitations of 37 CFR 1.14, as a routine use, to the public if the record was filed in an application which became abandoned or in which the proceedings were terminated and which application is referenced by either a published application, an application open to public inspections or an issued patent.

9. A record from this system of records may be disclosed, as a routine use, to a Federal, State, or local law enforcement agency, if the USPTO becomes aware of a violation or potential violation of law or regulation.

UNITED STATES PATENT AND TRADEMARK OFFICE

Commissioner for Patents
United States Patent and Trademark Office
P.O. Box 1450
Alexandria, VA 22313-1450
www.uspto.gov

SHERMAN D. PERNIA
1110 NASA ROAD ONE, SUITE 450
HOUSTON, TX 77058-3310

COPY MAILED

FEB 28 2005

OFFICE OF PETITIONS

In re Application of
Mikko Ilmari Vuorela
Application No. 10/126,254
Filed: April 19, 2002
Attorney Docket No. AJAT-187R

ON PETITION

This is a decision on the petition under 37 CFR 1.137(b), filed February 8, 2005, to revive the above-identified application.

The petition is **GRANTED.**

The above-identified application became abandoned for failure to reply in a timely manner to the final Office action mailed May 21, 2004, which set a shortened statutory period for reply of three (3) months. No extensions of time under the provision of 37 CFR 1.136(a) were obtained. Accordingly, the above-identified application became abandoned on August 22, 2004.

The above-identified application is being revived solely for purposes of continuity with a Request For Continued Examination (RCE) filed on February 8, 2005.

In the instant case, Konstantinos E. Spartiotis, CEO, has not satisfactorily established ownership of the property to the satisfaction of the Commissioner. A statement under 37 CFR 3.73(b) is required. More specifically, 37 CFR 3.73(b) provides that: (1) when an assignee seeks to take action in a matter before the Office, the assignee must establish its ownership of the property to the satisfaction of the Commissioner; (2) ownership is established by submitting to the Office, in the Office file related to the matter in which action is sought to be taken, documentary evidence of a chain of title from the original owner to the assignee (*e.g.,* copy of an executed assignment submitted for recording) or by specifying (*e.g.,* reel and frame number) where such evidence is recorded in the Office; (3) the submission establishing ownership must be signed by a party authorized to act on behalf of the assignee; and (4) documents submitted to establish ownership may be required to be recorded as a condition to permitting the assignee to take action in a matter pending before the Office. While a courtesy copy of this decision is being mailed to the person signing the instant petition, all future correspondence will be directed to the address of record until such time as appropriate Power of Attorney documentations are received to the contrary. A blank 37 CFR 3.73(b) accompanies this decision.

Telephone inquiries concerning this decision should be directed to Irvin Dingle at (571) 272-3210.

This matter is being forwarded to Technology Center AU 2878 for further processing.

Irvin Dingle
Petitions Examiner
Office of Petitions
Office of the Deputy Commissioner
for Patent Examination Policy

cc:

John Moetteli
4, St. Leonhard-Strasse
CH-9000 St. Gallen, Switzerland

Attachment: blank 37 CFR 3.73(b)

UNITED STATES PATENT AND TRADEMARK OFFICE

Commissioner for Patents
United States Patent and Trademark Office
P.O. Box 1450
Alexandria, VA 22313-1450
www.uspto.gov

SHERMAN D. PERNIA
1110 NASA ROAD ONE, SUITE 450
HOUSTON, TX 77058-3310

COPY MAILED

FEB 28 2005

OFFICE OF PETITIONS

ON PETITION

In re Application of :
Mikko Ilmari Vuorela :
Application No. 10/126,254 :
Filed: April 19, 2002 :
Attorney Docket No. AJAT-187R :

This is a decision on the petition under 37 CFR 1.137(b), filed February 8, 2005, to revive the above-identified application.

The petition is **GRANTED.**

The above-identified application became abandoned for failure to reply in a timely manner to the final Office action mailed May 21, 2004, which set a shortened statutory period for reply of three (3) months. No extensions of time under the provision of 37 CFR 1.136(a) were obtained. Accordingly, the above-identified application became abandoned on August 22, 2004.

The above-identified application is being revived solely for purposes of continuity with a Request For Continued Examination (RCE) filed on February 8, 2005.

In the instant case, Konstantinos E. Spartiotis, CEO, has not satisfactorily established ownership of the property to the satisfaction of the Commissioner. A statement under 37 CFR 3.73(b) is required. More specifically, 37 CFR 3.73(b) provides that: (1) when an assignee seeks to take action in a matter before the Office, the assignee must establish its ownership of the property to the satisfaction of the Commissioner; (2) ownership is established by submitting to the Office, in the Office file related to the matter in which action is sought to be taken, documentary evidence of a chain of title from the original owner to the assignee (*e.g.*, copy of an executed assignment submitted for recording) or by specifying (*e.g.*, reel and frame number) where such evidence is recorded in the Office; (3) the submission establishing ownership must be signed by a party authorized to act on behalf of the assignee; and (4) documents submitted to establish ownership may be required to be recorded as a condition to permitting the assignee to take action in a matter pending before the Office. While a courtesy copy of this decision is being mailed to the person signing the instant petition, all future correspondence will be directed to the address of record until such time as appropriate Power of Attorney documentations are received to the contrary. A blank 37 CFR 3.73(b) accompanies this decision.

Telephone inquiries concerning this decision should be directed to Irvin Dingle at (571) 272-3210.

This matter is being forwarded to Technology Center AU 2878 for further processing.

Irvin Dingle
Petitions Examiner
Office of Petitions
Office of the Deputy Commissioner
for Patent Examination Policy

cc:

John Moetteli
4, St. Leonhard-Strasse
CH-9000 St. Gallen, Switzerland

Attachment: blank 37 CFR 3.73(b)

UNITED STATES PATENT AND TRADEMARK OFFICE

Commissioner for Patents
United States Patent and Trademark Office
P.O. BOX 1450
ALEXANDRIA, VA 22313-1450
www.uspto.gov

THE LAW OFFICES OF MIKIO ISHIMARU
1110 SUNNYVALE-SARATOGA ROAD
SUITE A1
SUNNYVALE CA 94087

COPY MAILED
JUN 2 4 2004
OFFICE OF PETITIONS

In re Patent No. 6,720,133	:	
Issue Date: April 13, 2004	:	
Application No. 10/126,280	:	ON PETITION
Filed: April 19, 2002	:	
Attorney Docket No. AF01135	:	

This is a decision on the petition under 37 CFR 1.183, filed April 26, 2004, to waive the rules and accept the correction of the assignee data on the front page of the above-identified patent.

The petition is **granted**.

The Certificates of Correction Branch is directed to issue the requested Certificate of Correction.

Telephone inquiries concerning this matter may be directed to the Certificates of Correction Branch at (703) 305-8309.

Christina Tartera Donnell

Christina Tartera Donnell
Senior Petitions Attorney
Office of Petitions
(703) 306-5589

UNITED STATES PATENT AND TRADEMARK OFFICE

Commissioner for Pater
United States Patent and Trademark Offi
P.O. BOX 14
ALEXANDRIA, VA 22313-14
www.uspto.

THE LAW OFFICES OF MIKIO ISHIMARU
1110 SUNNYVALE-SARATOGA ROAD
SUITE A1
SUNNYVALE CA 94087

COPY MAILED
JUN 2 4 2004
OFFICE OF PETITIONS

In re Patent No. 6,720,133
Issue Date: April 13, 2004
Application No. 10/126,280
Filed: April 19, 2002
Attorney Docket No. AF01135

ON PETITION

This is a decision on the petition under 37 CFR 1.183, filed April 26, 2004, to waive the rules and accept the correction of the assignee data on the front page of the above-identified patent.

The petition is **granted**.

The Certificates of Correction Branch is directed to issue the requested Certificate of Correction.

Telephone inquiries concerning this matter may be directed to the Certificates of Correction Branch at (703) 305-8309.

Christina Tartera Donnell

Christina Tartera Donnell
Senior Petitions Attorney
Office of Petitions
(703) 306-5589

UNITED STATES PATENT AND TRADEMARK OFFICE

Commissioner for Patents
United States Patent and Trademark Office
P. O. Box 1450
Alexandria, VA 22313-1450
www.uspto.gov

Paper No. 13

ROBERT A. PARSONS
PARSONS & GOLTRY
SUITE 260
340 EAST PALM LANE
PHOENIX, AZ 85004

BEST AVAILABLE COPY

COPY MAILED
AUG 07 2003
OFFICE OF PETITIONS

In re Application of John Stafford et al Application No. 10/126,291 Filed: April 19, 2002 Attorney Docket No. 4240-P2A2	DECISION GRANTING PETITION UNDER 37 CFR 313(c)(2)

This is a decision on the petition, filed August 5, 2003 (by Express Mail), under 37 CFR 1.313(c)(2) to withdraw the above-identified application from issue after payment of the issue fee.

The petition is **GRANTED**.

The above-identified application is withdrawn from issue for consideration of a submission under 37 CFR 1.114 (request for continued examination). See 37 CFR 1.313(c)(2).

Petitioner is advised that the issue fee paid on June 26, 2003 in the above-identified application cannot be refunded. If, however, the above-identified application is again allowed, petitioner may request that it be applied towards the issue fee required by the new Notice of Allowance.[1]

Telephone inquiries should be directed to the undersigned at (703) 305-8680.

Upon receipt of the file in the Office of Petitions, the file will be forwarded to Technology Center AU 2832 for processing of the request for continued examination under 37 CFR 1.114 and for consideration of the concurrently filed Supplemental Information Disclosure Statement.

Frances Hicks
Frances Hicks
Petitions Examiner
Office of Petitions
Office of the Deputy Commissioner
for Patent Examination Policy

---

[1] The request to apply the issue fee to the new Notice may be satisfied by completing and returning the new Issue Fee Transmittal Form PTOL-85(b), which includes the following language thereon: "Commissioner for Patents is requested to apply the Issue Fee and Publication Fee (if any) or re-apply any previously paid issue fee to the application identified above." Petitioner is advised that, whether a fee is indicated as being due or not, the Issue Fee Transmittal Form **must** be completed and timely submitted to avoid abandonment. Note the language in bold text on the first page of the Notice of Allowance and Fee(s) Due (PTOL-85).

UNITED STATES PATENT AND TRADEMARK OFFICE

Commissioner for Patents
United States Patent and Trademark Office
P.O. Box 1450
Alexandria, VA 22313-1450
www.uspto.gov

Jonathan A. Platt
Renner, Otto, Boisselle & Sklar, LLP
1621 Euclid Avenue, Nineteenth Floor
Cleveland OH 44115-2191

COPY MAILED

AUG 2 7 2004

OFFICE OF PETITIONS

In re Application of :
Saint, et al. :
Application No. 10/126,302 :
Filed: April 19, 2002 :
Attorney Docket No. **310048-678** :
For: LASER IMAGEABLE RFID LABEL/TAG

DECISION
ON PETITION

This is a decision on the petition under 37 CFR 1.137(b), filed August 6, 2004, to revive the above-identified application.

This application became abandoned for failure to timely pay the issue fee and publication fee within three (3) months of the mailing of the November 26, 2003 Notice of Allowance and Fee(s) Due. Accordingly, this application became abandoned on February 27, 2004. The filing of the instant petition precedes the mailing of a Notice of Abandonment.

Applicants have submitted (1) a proper reply in the form of the issue fee, the publication fee, and a completed PTOL-85, (2) an acceptable statement of the unintentional nature of the delay in responding to the November 26, 2003 Notice of Allowance and Fee(s) Due, and (3) the petition fee.

The petition is **granted**.

This application is being forwarded to Publishing Division for processing into a patent.

Telephone inquiries concerning this matter may be directed to the undersigned at (703) 308-6712.

E. Shirene Willis
Senior Petitions Attorney
Office of Petitions

UNITED STATES PATENT AND TRADEMARK OFFICE

Commissioner for Patents
United States Patent and Trademark Office
P.O. Box 1450
Alexandria, VA 22313-1450
www.uspto.gov

COPY MAILED

JUN 16 2006

OFFICE OF PETITIONS

BRYAN A. SANTARELLI
GRAYBEAL JACKSON HALEY LLP
SUITE 350
155 – 108TH AVENUE NE
BELLEVUE, WA 98004-5901

In re Application of :

Peter S. Gorgone et al :
Application No. 10/126,353 : DECISION ON PETITION
Filed: April 19, 2002 : TO WITHDRAW
Attorney Docket No. 7293-245 : FROM RECORD

This is a decision on the Request to Withdraw as attorney or agent of record under 37 C.F.R. § 1.36(b), filed December 5, 2005.

The request is **NOT APPROVED** as moot.

A review of the file record indicates that the power of attorney to Bryan A. Santarelli, along with all of the other attorneys associated with Customer No. **00996** has been revoked by the assignee of the patent application on February 24, 2006. Accordingly, the request to withdraw under 37 C.F.R. § 1.36(b) is moot.

All future communications from the Office will be directed to the below-listed address until otherwise notified by applicant/assignee or the current attorneys of record.

This application is being referred to Technology Center AU 2195 to consider the Request For Continued Examination filed March 20, 2006.

Telephone inquires concerning this decision should be directed to the undersigned at 571-272- 3208.

Karen Creasy

Karen Creasy
Petitions Examiner
Office of Petitions

Conferee:

cc:

MARGER JOHNSON & MCCOLLOM, P.C.
210 SW MORRISON STREET, SUITE 400
PORTLAND, OR 97204

UNITED STATES PATENT AND TRADEMARK OFFICE

Commissioner for Patents
United States Patent and Trademark Office
P.O. Box 1450
Alexandria, VA 22313-1450
www.uspto.gov

Mailed: APR 13 2005

caf
Paper Number _____

In re application of:	Hong-Shing Chou	:	
Serial No.	10/126,388	:	DECISION ON
Filed:	April 19, 2002	:	PETITION
For:	TWO MASK IN-SITU OVERLAY CHECKING METHOD	:	
		:	

This is a response to the REQUEST FOR WITHDRAWL OF HOLDING OF ABANDONMENT 37 C.F.R. §1.8 (b) filed February 25, 2005. The petition requests that the abandonment, as set forth in the Notice of Abandonment of February 07, 2005, for failure to timely file a proper reply to the Office letter of June 23, 2004, be withdrawn since the applicants did timely file a response thereto on September 16, 2004 by facsimile transmission to the USPTO. (A copy of the papers filed September 16, 2004 and a copy of the Facsimile Transmission Report indicating receipt of the facsimile transmission at the USPTO is attached to the instant petition.)

DECISION

The instant request has been accepted as a petition to withdraw the holding of abandonment under the provisions of 37 CFR 1.181 (no fee) - no abandonment-in-fact. A review of the evidence presented reveals that applicant's response was properly filed on September 16, 2004 by facsimile transmission as evidenced by the properly completed Certification of Facsimile Transmission attached to applicant's response and by the copy of the Facsimile Transmission report provided with the instant petition which indicates the successful transmission, to a USPTO facsimile telephone number (703-872-9309), of 17 pages. Therefore, the application was never in-fact abandoned and any holding of abandonment for failure to timely file a proper response to the Office letter mailed on June 23, 2004 is hereby vacated, and the application is returned to pending status.

The application shall be forwarded to the examiner for processing and consideration of the papers originally filed September 16, 2004 by facsimile transmission and a copy of which is provided as an attachment to the instant petition.

The Petition is **GRANTED**.

J. Stone

Jacqueline Stone, Director
Technology Center 1700
Chemical and Materials Engineering

DUANE, MORRIS LLP
P.O. Box 5203
Princeton, New Jersey 08543-5203

UNITED STATES PATENT AND TRADEMARK OFFICE

Commissioner for Patents
United States Patent and Trademark Office
P.O. Box 1450
Alexandria, VA 22313-1450
www.uspto.gov

WILLIAMS MORGAN & AMERSON PC
10333 RICHMOND, SUITE 1100
HOUSTON, TX 77042

COPY MAILED
AUG 1 1 2004
OFFICE OF PETITIONS

In re Application of
Karsten Wieczorek et al
Application No. 10/126,423
Filed: April 19, 2002
Attorney Docket No. 2000.089800

DECISION GRANTING PETITION
UNDER 37 CFR 1.313(c)(2)

This is a decision on the petition, filed August 10, 2004, under 37 CFR 1.313(c)(2) to withdraw the above-identified application from issue after payment of the issue fee.

The petition is **GRANTED**.

The above-identified application is withdrawn from issue for consideration of a submission under 37 CFR 1.114 (request for continued examination). See 37 CFR 1.313(c)(2).

Petitioner is advised that the issue fee paid on July 12, 2004 in the above-identified application cannot be refunded. If, however, the above-identified application is again allowed, petitioner may request that it be applied towards the issue fee required by the new Notice of Allowance.[1]

Telephone inquiries should be directed to the undersigned at (703) 305-8680.

This matter is being referred to Technology Center AU 2823 for processing of the request for continued examination under 37 CFR 1.114 and for consideration of the concurrently filed Information Disclosure Statement.

Frances Hicks
Petitions Examiner
Office of Petitions
Office of the Deputy Commissioner
for Patent Examination Policy

---

[1] The request to apply the issue fee to the new Notice may be satisfied by completing and returning the new Issue Fee Transmittal Form PTOL-85(b), which includes the following language thereon: "Commissioner for Patents is requested to apply the Issue Fee and Publication Fee (if any) or re-apply any previously paid issue fee to the application identified above." Petitioner is advised that, whether a fee is indicated as being due or not, the Issue Fee Transmittal Form **must** be completed and timely submitted to avoid abandonment. Note the language in bold text on the first page of the Notice of Allowance and Fee(s) Due (PTOL-85).

UNITED STATES PATENT AND TRADEMARK OFFICE

Commissioner for Patents
United States Patent and Trademark Office
P.O. Box 1450
Alexandria, VA 22313-1450
www.uspto.go

PURDUE PHARMA, LP
PATENT DEPARTMENT
ONE STAMFORD FORUM
STAMFORD, CT 06901

COPY MAILED
AUG 1 9 2004
OFFICE OF PETITIONS

In re Application of	:	
Goehring et al.	:	
Application No. 10/126,437	:	ON PETITION
Filed: April 18, 2002	:	
Attorney Docket No. 332.1135	:	

This is a decision on the petition under 37 C.F.R. § 1.137(b), filed August 6, 2004, to revive the above-identified application.

The petition is **GRANTED.**

This application became abandoned for failure to timely reply within three months to the non-final Office action mailed November 14, 2003. No extensions of time under the provisions of 37 CFR 1.136(a) were obtained. Accordingly, this application became abandoned on February 15, 2004. A Notice of Abandonment was mailed on June 9, 2004.

Petitioner has met the requirements to revive the above-identified application pursuant to 37 CFR 1.137(b).

The file is now being forwarded to Technology Center 1600 for further examination on the merits.

Telephone inquiries should be directed to the undersigned at (703) 306-0482. Any telephone inquiries after September 28, 2004 should be directed to the undersigned at (571) 272-3206.

Liana Chase
Petitions Examiner
Office of Petitions
Office of the Deputy Commissioner
for Patent Examination Policy

SPE RESPONSE FOR CERTIFICATE OF CORRECTION

Paper No.:20060208

DATE : February 10, 2006

TO SPE OF : ART UNIT 2854

SUBJECT : Request for Certificate of Correction on Patent No.: 6,932,527

A response is requested with respect to the accompanying request for a certificate of correction.

Please complete this form and return with file, within **7** days to:
Certificates of Correction Branch - PK 3-910
Palm location **7590** - Tel. No. 305-8201

With respect to the change(s) requested, correcting Office and/or Applicant's errors, should the patent read as shown in the certificate of correction? No new matter should be introduced, nor should the scope or meaning of the claims be changed.

Thank You For Your Assistance **Certificates of Correction Branch**

The request for issuing the above-identified correction(s) is hereby:
Note your decision on the appropriate box.

☐ **Approved** **All** changes apply.

☒ **Approved in Part** Specify below which changes **do not** apply.

☐ **Denied** State the reasons for denial below.

Comments:

The requested listing of additional references in the "U.S. PATENT DOCUMENTS", "FOREIGN PATENT DOCUMENTS", AND "OTHER PUBLICATIONS" is not approved since there is no indication from the file wrapper that these documents were considered by the examiner during prosecution.

Andrew Hirshfeld
SPE AU 2854

UNITED STATES PATENT AND TRADEMARK OFFICE

Commissioner for Patents
United States Patent and Trademark Office
P.O. Box 1450
Alexandria, VA 22313-1450
www.uspto.gov

Paper No. 051304

HOWREY SIMON ARNOLD & WHITE
750 Bering Drive
Houston, TX 77057-2198

MAY 19 2004

In re Application of:
LAMARCA *et al.*
Serial No.: 10/126,444
Filed: April 19, 2002
Attorney Docket No.: **10161.0014.NPUS00**

DECISION ACCEPTING PAPERS

This is a response to the petition filed, via facsimile transmission, on December 12, 2003, and re-submitted February 24, 2004, to accept a copy of a response, in place of the apparently lost original response, as timely.

The petition is to accept the copy of the response is granted.

A Requirement for Restriction/Election (Requirement), setting a one (1) month period for response, was mailed on July 07, 2003. No Notice of Abandonment has been mailed.

The petitioner asserts that on July 23, 2003, a response to the Requirement was filed via facsimile. To support this assertion, petitioner has submitted a copy of a 10 page response bearing a certificate under 37 CFR § 1.8(a) showing a date of transmission of July 23, 2003, a copy of a report from petitioner's facsimile machine which acknowledges satisfactory facsimile transmission of 10 pages to the PTO on July 23, 2003, and a statement which attests to the previous timely transmission of the response to the PTO.

A review of the application file record reveals that the above-identified response is not of record in the application file and cannot be located. However, 37 CFR § 1.8(b) provides for accepting a correspondence as being timely filed if it was mailed or transmitted in accordance with 37 CFR § 1.8(a), and is reproduced below:

> In the event that correspondence is considered timely filed by being mailed or transmitted in accordance with paragraph (a) of this section, but not received in the Patent and Trademark Office, and the application is held to be abandoned or the proceeding is dismissed, terminated, or decided with prejudice, the correspondence will be considered timely if the party who forwarded such correspondence: (1) informs the Office of the previous mailing or transmission of the correspondence promptly after becoming aware that the Office has no evidence of receipt of the correspondence; (2) supplies an additional copy of the previously mailed or transmitted correspondence and certificate; and (3) includes a statement which attests on a personal

knowledge basis or to the satisfaction of the Commissioner to the previous timely mailing or transmission. If the correspondence was sent by facsimile transmission, a copy of the sending unit's report confirming transmission may be used to support this statement.

The petition, meets the conditions of 37 CFR § 1.8(b) to establish the previous timely filing of the response. Accordingly, the petition is **granted,** and the copy of the response filed with the petition on December 12, 2003 is accepted since the original has been lost.

It is noted that the examiner has already mailed a Notice of Allowance and Issue Fee Due and Notice of Allowability on May 10, 2004, taking the response into account. This decision does **not** change the time for response set in those Notices. This decision only addresses the unanswered petitions of December 12, 2003 and February 24, 2004.

Inquiries regarding this decision should be directed to Clayton E. LaBalle at (571) 272-1594.

Richard K. Seidel, Director
Technology Center 2800
Semiconductors, Electrical and Optical
Systems and Components

UNITED STATES PATENT AND TRADEMARK OFFICE

Commissioner for Patents
United States Patent and Trademark Office
P.O. Box 1450
Alexandria, VA 22313-1450
www.uspto.go

MAILED

SEP 2 7 2005

DIRECTOR'S OFFICE
TECHNOLOGY CENTER 2600

OPTV/MOFO
C/O MORRISON & FOERSTER LLP
1650 TYSONS BOULEVARD, SUITE 300
MCLEAN VA 22102

In re application of:
Michael Freeman, et al.
Application No. 10/126,480
Filed: April 19, 2002
For: DIGITAL INTERACTIVE SYSTEM FOR PROVIDING FULL INTERACTIVITY WITH LIVE PROGRAMMING EVENTS

DECISION ON REQUEST TO WITHDRAW FROM RECORD

This is a decision on the request to withdraw as attorney/agent of record filed on October 20, 2003.

A grantable request to withdraw as attorney/agent of record must:
(1) indicate the present mailing address of the attorney(s)/agent(s) who seek(s) to withdraw, and
(2) be signed by each attorney/agent seeking to withdraw or clearly be signed on their behalf, and
(3) be *approved* at least thirty (30) days prior to the maximum extendable period for response to any outstanding Office Action, and
(4) indicate the address to which future correspondence should be mailed.

Attorney requesting withdrawal is not of record.

Accordingly, the request is **DENIED**.

All future communications from the Office will continue to be directed to the address listed above until otherwise notified by applicant. Applicant is reminded of the obligation to promptly notify the Patent and Trademark Office of any change in correspondence address to ensure receipt of all communications from the Office.

Kenneth Wieder
Special Program Examiner
Technology Center 2600
Communications
(571) 272-2986

UNITED STATES PATENT AND TRADEMARK OFFICE

Commissioner for Patents
United States Patent and Trademark Office
P.O. Box 1450
Alexandria, VA 22313-1450
www.uspto.gov

OPTV/MOFO
C/O MORRISON & FOERSTER LLP
1650 TYSONS BOULEVARD, SUITE 300
MCLEAN VA 22102

COPY MAILED

JAN 0 4 2007

OFFICE OF PETITIONS

In re Application of
Michael J. Freeman, et al.
Application No. 10/126,480
Filed: April 19, 2002
Attorney Docket No. 559442000103

DECISION ON PETITION
TO WITHDRAW
FROM RECORD

This is a decision on the Request to Withdraw as attorney or agent of record under 37 C.F.R. § 1.36(b) filed September 29, 2006.

The request is **NOT APPROVED**.

A grantable request to withdraw as attorney/agent of record must be signed by every attorney/agent seeking to withdraw or contain a clear indication that one attorney is signing on behalf of another/others. A request to withdraw will not be approved unless at least 30 (thirty) days would remain between the date of approval and the later of the expiration date of a time to file a response or the expiration date of the maximum time period which can be extended under 37 C.F.R. § 1.136(a).

The Office cannot approve the request at this time since the reasons provided do not meet any of the conditions under the mandatory or permissive categories enumerated in 37 CFR 10.40. Section 10.40 of Title 37 of the Code of Federal Regulation states, "[a] practitioner shall not withdraw from employment in a proceeding before the Office without permission from the Office[.]" More specifically, 37 CFR 10.40 states, "[i]f paragraph (b) of this section is not applicable, a practitioner may not request permission to withdraw in matter pending before the Office unless such request or such withdrawal is" for one the permissive reasons listed in 37 CFR 10.40(c). The reasons set forth in the request, "application is being transferred to another attorney", do not meet any the conditions set forth in 37 CFR 10.40.

In order to request or take action in a patent matter, the assignee must establish its ownership of the patent to the satisfaction of the Director. In this regard, a Statement under 37 CFR 3.73(b) must have either: (i) documentary evidence of a chain of title from the original owner to the assignee (*e.g.*, copy of an executed assignment), and a statement affirming that the documentary evidence of the chain of title from the original owner to the assignee was or concurrently is being

submitted for recordation pursuant to § 3.11; or (ii) a statement specifying where documentary evidence of a chain of title from the original owner to the assignee is recorded in the assignment records of the Office (*e.g.*, reel and frame number).

All future communications from the Office will continue to be directed to the above-listed address until otherwise notified by applicant.

Telephone inquiries concerning this decision should be directed to undersigned at 571-272-1642.

April M. Wise
Petitions Examiner
Office of Petitions

cc: MARC KAUFMAN, ESQ.
NIXON PEABODY LLP
401 9TH STREET, NW
SUITE 900
WASHINGTON, DC 20004

UNITED STATES PATENT AND TRADEMARK OFFICE

COMMISSIONER FOR PATENTS
UNITED STATES PATENT AND TRADEMARK OFFICE
P.O. BOX 1450
ALEXANDRIA, VA 22313-1450
www.uspto.gov

Paper No. 10

MAIL

MAR 0 2 2004

DIRECTOR OFFICE
TECHNOLOGY CENTER 2600

OBLON, SPIVAK, MCCLELLAND, MAIER & NEUSTADT, P.C.
1940 DUKE STREET
ALEXANDRIA VA 22314

In re Application of :
BJORGAN :
Application No. 10/126,485 :DECISION ON REQUEST TO
Filed: April 19, 2002 :WITHDRAW AS ATTORNEY
For: **SYSTEMS FOR SELECTIVELY ASSOCIATING CUES WITH STORED VIDEO FRAMES AND METHODS OF OPERATING THE SAME** :

This is a decision on the request to withdraw as attorney/agent of record filed on May 30, 2003, (Paper No. 7).

A grantable request to withdraw as attorney/agent of record must do the following:
(1) indicate the present mailing address of the attorney(s)/agent(s) who seek(s) to withdraw, and
(2) be signed by each attorney/agent seeking to withdraw or clearly be signed on their behalf, and
(3) be *approved* at least thirty (30) days prior to the maximum extendable period for response to any outstanding Office Action, and
(4) indicate the address to which future correspondence should be mailed.

The Request to Withdraw as Attorney is **DISMISSED AS MOOT**.

Attorney requesting withdraw is not of record due to a Revocation of Power of Attorney executed by the assignee on September 25, 2003. Attorney requesting withdraw, Mr. William A. Munck is not of record.

Further communications will be directed to the address listed above until such a time as applicant properly notifies the Patent and Trademark Office of a change of address.

Krista Zeley
Special Program Examiner
Technology Center 2600
Communications
(703) 305-4701

cc :
Davis Munck
900 Galleria Tower
13155 Noel Road
Dallas, TX 75240

UNITED STATES PATENT AND TRADEMARK OFFICE

COMMISSIONER FOR PATENTS
UNITED STATES PATENT AND TRADEMARK OFFICE
WASHINGTON, D.C. 20231
www.uspto.gov

Paper No.5

Steve M. Perry
THORPE, NORTH & WESTERN, L.L.P.
P.O. Box 1219
Sandy, UT 84091-1219

COPY MAILED

SEP 2 4 2002

OFFICE OF PETITIONS

In re Application of
Steven Sunyich
Application No.10/126,486
Filed: April 19, 2002
Attorney Docket Number: T9258.NP

DECISION REFUSING STATUS
UNDER 37 C.F.R. §1.47(b)

This is in response to the petition under 37 C.F.R. §1.47(b), filed August 5, 2002 (certificate of mailing July 29, 2002).

Rule 47 applicant is given **TWO MONTHS** from the mailing date of this decision to reply, correcting the below-noted deficiencies. Any reply should be entitled "Request for Reconsideration of Petition Under 37 C.F.R. §1.47(b)," and should only address the deficiencies noted below, except that the reply may include an oath or declaration executed by the non-signing inventor. **Failure to respond will result in abandonment of the application**. Any extensions of time will be governed by 37 C.F.R. §1.136(a).

The above-identified application was filed on April 19, 2002, without an executed oath or declaration, and naming Steven Sunyich as sole inventor. Accordingly, on May 29, 2002, a Notice to File Missing Parts of Application - Filing Date Granted was mailed, requiring applicant to submit an executed oath or declaration and pay a surcharge for late filing. The Notice set an extendable two month period for reply.

In reply, applicant filed the instant petition (and fee), the surcharge for late filing of the declaration, and a declaration.

A grantable petition under 37 C.F.R. §1.47(b) requires: (1) proof that the non-signing inventor cannot be reached or refuses to sign the oath or declaration; (2) an acceptable oath or declaration; (3) the petition fee; (4) a statement of last known address of the non-signing inventor; (5) proof of proprietary interest; and (6) a showing that such action is necessary to preserve the rights of parties or to prevent irreparable damage. Rule 47 applicant has failed to establish (1), (2), (5) and (6).

Proof of Refusal to Sign the Oath or Declaration

As to item (1), Rule 47 applicant has failed to show that inventor Sunyich refused to sign the declaration after having been presented with the application papers. Before a refusal can be alleged, applicant must demonstrate a bona fide attempt was made to present a copy of application papers (specification, including claims, drawings, and oath or declaration) to the non-signing inventor. See MPEP 409.03(d). The petition does not indicate application papers were submitted for inventor Sunyich's review and

signature. All that is indicated is that the declaration was submitted for Sunyich to execute. The fact that inventor Sunyich reviewed the provisional application and has pending litigation against eRoom System Technologies, Inc, does not absolve rule 47 applicant from presenting the application papers to Sunyich. See MPEP 409.03 (b). Inventor Sunyich must be presented with the opportunity to sign the application papers before rule 47 status will be granted.

An Acceptable Oath or Declaration

As to item (2),the granting of 47 status requires a rule 47 (b) applicant to make the oath required by 37 CFR §1.63 and §1.64. An officer of a corporation normally is required to sign the oath or declaration. Essentially rule 47 (b) applicant is signing on behalf of non-signing inventor. The declaration required must state the full name, residence, post office address, and citizenship of the non-signing inventor. The title or position of the person signing must also be stated if signing on behalf of a corporation under 37 CFR §1.47(b). See MPEP 409.03(b).

Proof of Proprietary Interest

As to item (5), proprietary interest is usually found by establishing a) the invention has been assigned to applicant, or b) the inventor has agreed in writing to assign the invention to the applicant or c) the applicant otherwise has sufficient proprietary interest in the subject matter to justify the filing of the application. See MPEP 409.03(f). Rule 47 applicant merely indicates non-signing inventor has an agreement with eRoom System Technologies, Inc, however evidence of such an agreement as well as the contents of this agreement have not been supplied. As such, proof of proprietary interest has not been established.

Showing That Such Action Is Necessary to Preserve the Rights of Parties or to Prevent Irreparable Damage.

As to item (6), applicant has failed to provide a statement that the granting of rule 47 status is necessary to preserve the rights of the rule 47 applicant or prevent irreparable damage. See MPEP 409.03(h).

Further correspondence with respect to this matter should be addressed as follows:

By mail:	Assistant Commissioner for Patents Box DAC Washington, D.C. 20231
By FAX:	(703) 308-6916 Attn: Office of Petitions
By hand:	Crystal Plaza Four, Suite 3C23 2201 S. Clark Place Arlington, VA 22202

Telephone inquiries regarding this decision should be directed to Petitions Attorney Charlema R. Grant at (703) 305-0309.

E. Shirene Willis for

Beverly M. Flanagan
Supervisory Petitions Examiner
Office of Petitions
Office of the Deputy Commissioner
for Patent Examination Policy

UNITED STATES PATENT AND TRADEMARK OFFICE

COMMISSIONER FOR PATENTS
UNITED STATES PATENT AND TRADEMARK OFFICE
WASHINGTON, D.C. 20231
www.uspto.gov

Paper No.7

Steve M. Perry
THORPE, NORTH & WESTERN, L.L.P.
P.O. Box 1219
Sandy, UT 84091-1219

COPY MAILED

DEC 13 2002

OFFICE OF PETITIONS

In re Application of
Steven Sunyich
Application No.10/126,486
Filed: April 19, 2002
Attorney Docket Number: T9258.NP

DECISION REFUSING STATUS
UNDER 37 C.F.R. §1.47(b)

This is in response to the renewed petition under 37 C.F.R. §1.47(b), filed November 4, 2002.

Rule 47 applicant is given **TWO MONTHS** from the mailing date of this decision to reply, correcting the below-noted deficiencies. Any reply should be entitled "Request for Reconsideration of Petition Under 37 C.F.R. §1.47(b)," and should only address the deficiencies noted below, except that the reply may include an oath or declaration executed by the non-signing inventor. **Failure to respond will result in abandonment of the application**. Any extensions of time will be governed by 37 C.F.R. §1.136(a).

The above-identified application was filed on April 19, 2002, without an executed oath or declaration, and naming Steven Sunyich as sole inventor. Accordingly, on May 29, 2002, a Notice to File Missing Parts of Application - Filing Date Granted was mailed, requiring applicant to submit an executed oath or declaration and pay a surcharge for late filing. The Notice set an extendable two month period for reply.

In reply, applicant filed the instant petition (and fee), the surcharge for late filing of the declaration, and a declaration.

A grantable petition under 37 C.F.R. §1.47(b) requires: (1) proof that the non-signing inventor cannot be reached or refuses to sign the oath or declaration; (2) an acceptable oath or declaration; (3) the petition fee; (4) a statement of last known address of the non-signing inventor; (5) proof of proprietary interest; and (6) a showing that such action is necessary to preserve the rights of parties or to prevent irreparable damage. Rule 47 applicant has failed to establish (1), (2), (5) and (6).

Proof of Refusal to Sign the Oath or Declaration

As to item (1), Rule 47 applicant has failed to show that inventor Sunyich refused to sign the declaration after having been presented with the application papers. Before a refusal can be alleged, applicant must demonstrate a bona fide attempt was made to present a copy of application papers (specification, including claims, drawings, and oath or declaration) to the non-signing inventor. See MPEP 409.03(d). The renewed petition does not indicate application papers were submitted for inventor Sunyich's review and signature. All that is indicated is that the declaration was submitted for Sunyich to

execute. The fact that inventor Sunyich reviewed the provisional application and has pending litigation against eRoom System Technologies, Inc, does not absolve rule 47 applicant from presenting the application papers to Sunyich. See MPEP 409.03 (b). Nor should inventor be required to rely upon applicant's assertion that there have not been any changes to the provisional application. Inventor Sunyich must be presented with the opportunity to sign the application papers before rule 47 status will be granted.

An Acceptable Oath or Declaration

As to item (2),the granting of 47 status requires a rule 47 (b) applicant to make the oath required by 37 CFR §1.63 and §1.64. An officer of a corporation normally is required to sign the oath or declaration. Essentially rule 47 (b) applicant is signing on behalf of non-signing inventor. The declaration required must state the full name, residence, post office address, and citizenship of the non-signing inventor. The title or position of the person signing must also be stated if signing on behalf of a corporation under 37 CFR §1.47(b). See MPEP 409.03(b).

Proof of Proprietary Interest

As to item (5), proprietary interest is usually found by establishing a) the invention has been assigned to applicant, or b) the inventor has agreed in writing to assign the invention to the applicant or c) the applicant otherwise has sufficient proprietary interest in the subject matter to justify the filing of the application. See MPEP 409.03(f). Rule 47 applicant merely indicates non-signing inventor has an agreement with eRoom System Technologies, Inc, however evidence of such an agreement as well as the contents of this agreement have not been supplied. As such, proof of proprietary interest has not been established.

Showing That Such Action Is Necessary to Preserve the Rights of Parties or to Prevent Irreparable Damage.

As to item (6), applicant has failed to provide a statement that the granting of rule 47 status is necessary to preserve the rights of the rule 47 applicant or prevent irreparable damage. See MPEP 409.03(h).

Further correspondence with respect to this matter should be addressed as follows:

By mail:	Assistant Commissioner for Patents Box DAC Washington, D.C. 20231
By FAX:	(703) 308-6916 Attn: Office of Petitions
By hand:	Crystal Plaza Four, Suite 3C23 2201 S. Clark Place Arlington, VA 22202

Telephone inquiries regarding this decision should be directed to Petitions Attorney Charlema R. Grant at (703) 305-0309.

for

Beverly M. Flanagan
Supervisory Petitions Examiner
Office of Petitions
Office of the Deputy Commissioner
for Patent Examination Policy

UNITED STATES PATENT AND TRADEMARK OFFICE

COMMISSIONER FOR PATENTS
UNITED STATES PATENT AND TRADEMARK OFFICE
WASHINGTON, D.C. 20231
www.uspto.gov

Paper No. 10

COPY MAILED

APR 0 2 2003

OFFICE OF PETITIONS

Steve M. Perry
THORPE, NORTH & WESTERN, L.L.P.
P.O. Box 1219
Sandy, UT 84091-1219

In re Application of
Steven Sunyich
Application No. 10/126,486
Filed: April 19, 2002
Attorney Docket Number: T9258.NP
Title: PERSONALIZED SMART ROOM

DECISION ACCORDING STATUS
UNDER 37 C.F.R. §1.47(b)

This is in response to the renewed petition for status under 37 C.F.R. §1.47(b), filed February 21, 2003 and supplemented March 26, 2003.

The petition is **GRANTED**.

The above-identified application was filed on April 19, 2002, without an executed oath or declaration, and naming Steven Sunyich as sole inventor. Accordingly, on May 29, 2002, a Notice to File Missing Parts of Application - Filing Date Granted was mailed, requiring applicant to submit an executed oath or declaration and pay a surcharge for late filing. The Notice set an extendable two month period for reply.

Applicant has satisfied the requirements of §1.47(b)[1]. Applicant, by declaration of persons with first hand knowledge and documentary evidence, demonstrated that the non-signing inventor has been presented with a copy of the application papers for signature and that he has refused by his conduct to sign the declaration. Applicant submitted a declaration signed by Gregory L. Hrncir, General Counsel and Chief Operating Officer of applicant corporation. This declaration has been reviewed and is found in compliance with 1.63 and 1.64. Applicant paid the petition fee and included a statement of the non-signing inventor's last known address in the petition. The employment agreement and declaration of Gregory L. Hrncir establishes the applicant's proprietary interest in the application.

This application is hereby accorded Rule 1.47(b) status.

As provided in new Rule 1.47(c), this Office will forward notice of this application's filing to the non-signing inventor at the address given in the petition. Notice of the filing of this application will also be published in the Official Gazette.

The application file is being forwarded to the Office of Initial Patent Examination for processing.

---

[1] A grantable petition under 37 C.F.R. §1.47(b) requires: (1) proof that the non-signing inventor cannot be reached or refuses to sign the oath or declaration; (2) an acceptable oath or declaration; (3) the petition fee; (4) a statement of last known address of the non-signing inventor; (5) proof of proprietary interest; and (6) proof of irreparable damage.

Telephone inquiries regarding this decision should be directed to the undersigned at (703) 306-0251.

Charlema R. Grant

Charlema R. Grant
Petitions Attorney
Office of Petitions

UNITED STATES PATENT AND TRADEMARK OFFICE

COMMISSIONER FOR PATENTS
UNITED STATES PATENT AND TRADEMARK OFFICE
WASHINGTON, D.C. 20231
www.uspto.gov

Steven L. Sunyich
2506 Parkway Circle
Santa Clara, Utah 84765

In re Application of
Steven Sunyich
Application No. 10/126,486
Filed: April 19, 2002
Attorney Docket Number: T9258.NP
Title: PERSONALIZED SMART ROOM

LETTER

COPY MAILED

APR 0 2 2003

OFFICE OF PETITIONS

Dear Mr. Sunyich:

You are named as the sole inventor in the above-identified United States patent application filed under the provisions of 35 U.S.C. 118 (United States Code) and 37 CFR 1.47(b). Should a patent be granted on the application you will be designated therein as the sole inventor.

As the named inventor you are entitled to inspect any paper in the file wrapper of the application, order copies of all or any part thereof (at a prepaid cost per 37 CFR 1.19) or make your position of record in the application. Alternatively, you may arrange to do any of the preceding through a registered patent attorney or agent presenting written authorization from you. If you care to join the application, counsel of record (see below) would presumably assist you. Joining in the application would entail the filing of an appropriate oath or declaration by you pursuant to 37 CFR 1.63.

Telephone inquiries regarding this communication should be directed to Petitions Attorney Charlema R. Grant at (703) 306-0251. Requests for information regarding your application should be directed to the File Information Unit at (703) 308-2733. Information regarding how to pay for and order a copy of the application, or a specific paper in the application, should be directed to Certification Division at (703) 308-9726 or 1-800-972-6382 (outside the Washington D.C. area).

Charlema R. Grant

Charlema Grant
Petitions Attorney
Office of Petitions

Steve M. Perry
THORPE, NORTH & WESTERN, L.L.P.
P.O. Box 1219
Sandy, UT 84091-1219

UNITED STATES PATENT AND TRADEMARK OFFICE

Commissioner for Patents
United States Patent and Trademark Office
P.O. Box 1450
Alexandria, VA 22313-1450
www.uspto.go

MAILED

OCT 20 2005

DIRECTOR'S OFFICE
TECHNOLOGY CENTER 2600

OBLON SPIVAK MCCLELLAND MAIER &
NEUSTADT, P.C.
1940 DUKE STREET
ALEXANDRIA, VIRGINIA 22314

In re Application of
Stephen Bjorgan, et al.
Application No. 10/126,502
Filed: April 19, 2002
For: SUBSCRIBER INTERFACE DEVICE FOR USE WITH AN INTELLIGENT CONTENT-BROADCAST NETWORK AND METHOD OF OPERATING THE SAME

DECISION ON REQUEST TO WITHDRAW FROM RECORD

This is a decision on the request to withdraw as attorney/agent of record filed on May 30, 2003.

A grantable request to withdraw as attorney/agent of record must do the following:
(1) indicate the present mailing address of the attorney(s)/agent(s) who seek(s) to withdraw, and
(2) be signed by each attorney/agent seeking to withdraw or clearly be signed on their behalf, and
(3) be *approved* at least thirty (30) days prior to the maximum extendable period for response to any outstanding Office Action, and
(4) indicate the address to which future correspondence should be mailed.

A Revocation and Power of Attorney was filed September 12, 2003 and accepted on March 29, 2004. Accordingly, the request is **DISMISSED**.

All future communications from the Office will be directed to the address listed above until otherwise notified by applicant. Applicant is reminded of the obligation to promptly notify the Patent and Trademark Office of any change in correspondence address to ensure receipt of all communications from the Office.

Kenneth A. Wieder
Special Program Examiner
Technology Center 2600
Communications

UNITED STATES PATENT AND TRADEMARK OFFICE

Commissioner for Patents
United States Patent and Trademark Office
P.O. Box 1450
Alexandria, VA 22313-1450
www.uspto.gov

MELVIN K. SILVERMAN AND ASSOCS PC
500 WEST CYPRESS CREEK ROAD
SUITE 350
FT. LAUDERDALE, FL 33309

COPY MAILED
NOV 10 2008

In re Application of :
Stephens et al. :
Application No. 10/126,515 : ON PETITION
Filed: April 22, 2002 :
Attorney Docket No. 1289.10 :

This is a decision on the petition under the unintentional provisions of 37 CFR 1.137(b), filed September 30, 2008, to revive the above-identified application.

The petition is **GRANTED**.

The application became abandoned for failure to timely file a reply within the meaning of 37 CFR 1.113 to the final Office action of March 12, 2008. The proposed reply required for consideration of a petition to revive must be a Notice of Appeal (and appeal fee required by 37 CFR 41.20(b)(2), an amendment that *prima facie* places the application in condition for allowance, a Request for Continued Examination and submission (37 CFR 1.114), or the filing of a continuing application under 37 CFR 1.53(b). See MPEP 711.03(c)(III)(A)(2). No extensions of time pursuant to the provisions of 37 CFR 1.136(a) were obtained. Accordingly, the date of abandonment of this application is July 13, 2008.

The petition satisfies the requirements of 37 CFR 1.137(b) in that petitioner has supplied (1) the reply in the form of a Request for Continued Examination (RCE) and fee of $405, and the submission required by 37 CFR 1.114; (2) the petition fee of $770; and (3) a proper statement of unintentional delay.

Pursuant t to petitioner's request the correspondence address of record for the above-identified application has been associated with customer number 27353.

Telephone inquiries concerning this decision should be directed to the undersigned at (571) 272-3215.

This application is being referred to Technology Center AU 3695 for processing of the RCE and for appropriate action by the Examiner in the normal course of business on the previously submitted amendment submitted in accordance with 37 CFR 1.114.

Charlema Grant

Charlema Grant
Petitions Attorney
Office of Petitions

UNITED STATES PATENT AND TRADEMARK OFFICE

COMMISSIONER FOR PATENTS
UNITED STATES PATENT AND TRADEMARK OFFICE
WASHINGTON, D.C. 20231
www.uspto.gov

Paper No. 5

MEDTRONIC, INC.
710 MEDTRONIC PARKWAY NE
MS-LC340
MINNEAPOLIS, MN 55432-5604

COPY MAILED

APR 0 9 2003

OFFICE OF PETITIONS

In re Application of :
Chester Struble, et al. :
Application No. 10/126,516 :
Filed: April 22, 2002 :
Attorney Docket No. P-9206 :

ON PETITION

This is a decision on the petition under 37 CFR 1.137(b), filed December 18, 2002, to revive the above-identified application.

The petition is **GRANTED**.

The above-identified application became abandoned for failure to reply in a timely manner to the Notice to File Missing Parts of Nonprovisional Application mailed May 24, 2002. The Notice set a period for reply of two (2) months from the mail date of the Notice. No extensions of time under the provisions of 37 CFR 1.136(a) were obtained. Accordingly, the above-identified application became abandoned on July 25, 2002.

37 CFR 1.137(b)(3) requires a statement that the entire delay in filing the required reply from the due date for the reply until the filing of a grantable petition pursuant to 37 CFR 1.137(b) was unintentional. If the statement contained in the instant petition varies from the language required by 37 CFR 1.137(b)(3), it will be interpreted as the required statement. Petitioner must notify the Office if this is **not** a correct interpretation of the statement contained in the instant petition.

Telephone inquiries concerning this decision should be directed to the undersigned at (703) 306-5594.

The application file is being forwarded to the Office of Initial Patent Examination for further processing.

Retta Williams

Retta Williams
Petitions Examiner
Office of Petitions
Office of the Deputy Commissioner
for Patent Examination Policy

UNITED STATES PATENT AND TRADEMARK OFFICE

Commissioner for Patents
United States Patent and Trademark Office
Washington, D.C. 20231
www.uspto.gov

Paper No. 5

Medtronic, Inc.
710 Medtronic Parkway (MS-LC340)
Minneapolis, MN 55432-5604

COPY MAILED

JAN 0 6 2003

OFFICE OF PETITIONS

In re Application of :
Struble :
Application No. 10/126,522 : ON PETITION
Filed: April 22, 2002 :
Attorney Docket No. P-9648.00 :

This is a decision on the petition under 37 CFR 1.137(b), filed December 23, 2002, to revive the above-identified application.

The petition is **GRANTED**.

The above-identified application became abandoned for failure to reply in a timely manner to the Notice to File Missing Parts of Application (Notice) mailed May 24, 2002. The Notice set a period for reply of two (2) months from the mail date of the Notice. No extensions of time under the provisions of 37 CFR 1.136(a) were obtained. Accordingly, the above-identified application became abandoned on July 25, 2002.

Telephone inquiries concerning this decision should be directed to Latrice Bond at (703) 308-6911.

The application file is being forwarded to the Office of Initial Patent Examination for further processing.

Latrice Bond

Latrice Bond
Paralegal Specialist
Office of Petitions
Office of the Deputy Commissioner
for Patent Examination Policy

UNITED STATES PATENT AND TRADEMARK OFFICE

COMMISSIONER FOR PATENTS
UNITED STATES PATENT AND TRADEMARK OFFICE
P.O. BOX 1450
ALEXANDRIA, VA 22313-1450
www.uspto.gov

MCCARTHY TETRAULT LLP
BOX 48, SUITE 4700,
66WELLINGTON STREET WEST
TORONTO ON M5K 1E6 CA CANADA

COPY MAILED

NOV 29 2006

OFFICE OF PETITIONS

ON PETITION

In re Application of :
Ken Dubuc :
Application No. 10/126,527 :
Filed: April 22, 2002 :
Attorney Docket No. 123081-339585 :

This is a decision in response to the petition, filed June 20, 2006, to revive the above-identified application under the provisions of 37 CFR 1.137(b).

There is no indication that the person signing the instant petition was ever given a power of attorney or authorization of agent to prosecute the above-identified application. However, in accordance with 37 CFR 1.34(a), the signature of Marvin Petry appearing on the petition shall constitute a representation to the United States Patent and Trademark Office that he is authorized to represent the particular party on whose behalf he acts. However, if Mr. Petry desires to receive future correspondence regarding this application, the appropriate power of attorney or authorization of agent must be submitted. A courtesy copy of this decision is being mailed to petitioner. Nevertheless, all future correspondence regarding this application file will be directed solely to the address of record.

A review of the record discloses that the application became abandoned for a failure to reply in a timely manner to a non-final Office action mailed November 22, 2004. This decision precedes the mailing of a Notice of Abandonment.

37 CFR 1.137(b)(3) requires a statement that the entire delay in filing the required reply from the due date for the reply until the filing of a grantable petition pursuant to 37 CFR 1.137(b) was unintentional. While it is not apparent whether the person signing the statement of unintentional delay was in a position to have firsthand or direct knowledge of the facts and circumstances of the delay at issue, such statement is being treated as having been made as the result of a reasonable inquiry into the facts and circumstances of such delay. See 37 CFR 10.18(b) and Changes to Patent Practice and Procedure; Final Rule Notice, 62 Fed. Reg. 53131, 53178 (October 10, 1997), 1203 Off. Gaz. Pat. Office 63, 103 (October 21, 1997). In the event that such an inquiry has not been made, petitioner must make such an inquiry. If such inquiry results in the discovery that it is not correct that the entire delay in filing the required reply from the due date for the reply until the filing of a grantable petition pursuant to 37 CFR 1.137(b) was unintentional, petitioner must notify the Office.

The petition is **GRANTED**.

The application is being referred to Technology Center AU 2616 for consideration of the amendment filed June 20, 2006.

Telephone inquiries concerning this decision should be directed to the undersigned at (571) 272-3204. Inquiries relating to further prosecution should be directed to the Technology Center.

Sherry D. Brinkley
Petitions Examiner
Office of Petitions

cc: MARVIN PETRY
1199 NORTH FAIRFAX STREET
SUITE 900
ALEXANDRIA, VA 22314

UNITED STATES PATENT AND TRADEMARK OFFICE

Commissioner for Patents
United States Patent and Trademark Office
Washington, D.C. 20231
www.uspto.gov

Paper No. 6

Medtronic Inc.
710 Medtronic Parkway (MS-LC340)
Minneapolis, MN 55432-5604

COPY MAILED

JAN 0 6 2003

OFFICE OF PETITIONS

In re Application of :
Struble :
Application No. 10/126,538 : ON PETITION
Filed: April 22, 2002 :
Attorney Docket No. P-9437.00 :

This is a decision on the petition under 37 CFR 1.137(b), filed December 18, 2002, to revive the above-identified application.

The petition is **GRANTED**.

The above-identified application became abandoned for failure to reply in a timely manner to the Notice to File Missing Parts of Application (Notice) mailed May 29, 2002. The Notice set a period for reply of two (2) months from the mail date of the Notice. No extensions of time under the provisions of 37 CFR 1.136(a) were obtained. Accordingly, the above-identified application became abandoned on July 30, 2002.

Telephone inquiries concerning this decision should be directed to Latrice Bond at (703) 308-6911.

The application file is being forwarded to the Office of Initial Patent Examination for further processing.

Latrice Bond

Latrice Bond
Paralegal Specialist
Office of Petitions
Office of the Deputy Commissioner
for Patent Examination Policy

UNITED STATES PATENT AND TRADEMARK OFFICE

Commissioner for Patents
United States Patent and Trademark Office
Washington, D.C. 20231
www.uspto.gov

Paper No. 5

MEDTRONIC, INC.
710 MEDTRONIC PARKWAY NE
MS-LC340
MINNEAPOLIS MN 55432-5604

COPY MAILED

FEB 0 4 2003

OFFICE OF PETITIONS

In re Application of :
Struble et al. :
Application No. 10/126,539 : DECISION ON PETITION
Filed: April 22, 2002 :
Attorney Docket No. P-9464 :

This is a decision in response to the petition under 37 CFR 1.137(b), filed on December 19, 2002, and supplemented on December 23, 2002, to revive the above-identified application.

This Petition is hereby **dismissed as moot**.

The above-identified application became abandoned for failure to reply in a timely manner to the Notice to File Missing Parts of Nonprovisional Application ("Notice") mailed May 30, 2002. The Notice set a period for reply of two (2) months from the mail date of the Notice, and also provided for extensions of time under 37 CFR 1.136(a). The Notice required, in relevant part, an executed Oath/Declaration.

In response to the Notice, Petitioner files the instant petition; however, the petition is filed before the application has become abandoned. The Notice set a two-month period for reply, but also provided for extensions of time under 37 CFR 1.136. Because the two-month period for reply is not a set by statute, Under 37 CFR 1.136, a maximum of five (5) months of extendable time is available. The Notice was mailed on May 30, 2002, with two-month period for reply, extendable for five additional months, making the maximum extendable period for reply December 30, 2002. Petitioner timely filed the response, prior to the application becoming abandoned.

Petitioner's deposit account has been not been charged the petition fee; however, Petitioner's deposit account has been charged the five-month extension of time fee - $1970.00, along with the surcharge for the late filing of the oath or declaration.

The oath or declaration has been entered and made of record.

The application is being returned to the Office of Initial Patent Examination for further processing.

Telephone inquiries concerning this matter should be directed to the undersigned at (703) 305-0014.

Derek L. Woods
Petitions Attorney
Office of Petitions

UNITED STATES PATENT AND TRADEMARK OFFICE

Commissioner for Patents
United States Patent and Trademark Office
Washington, D.C. 20231
www.uspto.gov

MEDTRONIC, INC.
710 MEDTRONIC PARKWAY NE
MS-LC340
MINNEAPOLIS MN 55432-5604

Paper No. 6

COPY MAILED

FEB 1 1 2003

OFFICE OF PETITIONS

In re Application of
Struble et al.
Application No. 10/126,539
Filed: April 22, 2002
Attorney Docket No. P-9464

CORRECTED
DECISION ON PETITION

This is a decision in response to the petition under 37 CFR 1.137(b), filed on December 19, 2002, and supplemented on December 23, 2002, to revive the above-identified application.

This Petition is hereby **granted**.

The above-identified application became abandoned for failure to reply in a timely manner to the Notice to File Missing Parts of Nonprovisional Application ("Notice") mailed May 30, 2002. The Notice set a period for reply of two (2) months from the mail date of the Notice, and also provided for extensions of time under 37 CFR 1.136(a). The Notice required, in relevant part, an executed Oath/Declaration.

In response to the Notice, Petitioner files the instant petition and executed oath/declaration.

The oath or declaration has been entered and made of record.

The petition fee and surcharge for late filing the oath or declaration have been charged to deposit account 13-2546 as authorized in the fee transmittal filed with the instant petition.

The application is being returned to the Office of Initial Patent Examination for further processing.

Telephone inquiries concerning this matter should be directed to the undersigned at (703) 305-0014.

Derek L. Woods
Petitions Attorney
Office of Petitions

UNITED STATES PATENT AND TRADEMARK OFFICE

COMMISSIONER FOR PATENTS
UNITED STATES PATENT AND TRADEMARK OFFICE
P.O. BOX 1450
ALEXANDRIA, VA 22313-1450
www.uspto.gov

AUG 20 2004

In re Application of	:	
Sang Soo Lee et al.	:	
Serial No. 10/126,586	:	WITHDRAWAL FROM
Filed: April 22, 2002	:	ISSUE
For: CARRIER FOR A MODULE	:	
INTEGRATED CIRCUIT HANDLER	:	

The purpose of this communication is to inform you that the above-identified application is being withdrawn from issue pursuant to 37 CFR 1.313.

The application is being withdrawn to permit reopening of prosecution. The reasons therefor will be communicated to you by the examiner.

PTO records reveal that the issue fee has not been paid. If the issue fee has been submitted, the applicant may request a refund or may request that the fee be credited to a deposit account. However, applicant may wait until the application is either again found allowable or held abandoned. If the application is allowed, upon receipt of a new Notice of Allowance and Issue Fee Due, applicant may request that the previously submitted issue fee be applied toward payment of the issue fee in the amount identified on the new Notice of Allowance and Issue Fee Due. If the application is abandoned, applicant may request either a refund or a credit to a deposit account.

The application is being forwarded to the examiner for prompt action.

E. Rollins-Cross

E. Rollins-Cross, Director
Technology Center 3700

Fleshner & Kim, LLP
P.O. Box 221200
Chantilly, VA 20153

UNITED STATES PATENT AND TRADEMARK OFFICE

Commissioner for Patents
United States Patent and Trademark Office
P.O. Box 1450
Alexandria, VA 22313-1450
www.uspto.gov

POSZ LAW GROUP, PLC
12040 SOUTH LAKES DRIVE
SUITE 101
RESTON VA 20191

COPY MAILED

SEP 28 2005

OFFICE OF PETITIONS

In re Application of
Teraura
Application Number: 10/126,627
Patent: 6,827,279
Attorney Docket Number: 11-086
Filing Date: April 22, 2002
Issue Date: December 7, 2004

DECISION ON PETITION

This is a decision on the petition to correct the name of the assignee under 37 CFR 1.183 filed on April 26, 2005. The petition is properly treated under 37 CFR 3.81 (b)[1] to correct the name of the assignees on the front page of the above-identified patent by way of a Certificate of Correction.

The petition is **Granted**.

This application is being forwarded to the Certificate of Correction Branch for issuance of the requested Certificate of Correction.

Telephone inquiries concerning this matter should be directed to the undersigned at (571) 272-3215. Any questions concerning the issuance of the Certificate of Correction should be directed to the Certificate of Correction Branch at (703) 305-8309.

Charlema R. Grant

Charlema R. Grant
Petitions Attorney
Office of Petitions

[1]See 69 Fed. Reg. 29865 (May 26, 2004).

UNITED STATES PATENT AND TRADEMARK OFFICE

Commissioner for Patents
United States Patent and Trademark Office
P. O. Box 1450
Alexandria, VA 22313-1450
www.uspto.gov

Paper No. 8

Foley and Lardner
P. O. Box 80278
San Diego, CA 92138-0278

COPY MAILED

AUG 2 2 2003

OFFICE OF PETITIONS

In re Application of
Susan L. Mooberry, et al.
Application No. 10/126,674
Filed: April 19, 2002
Attorney Docket No. UTAH1100-1(074942-0203)

DECISION ON PETITION
UNDER 37 CFR 1.137(b)

This is a decision on the petition filed June 13, 2003, under 37 CFR 1.137(f) which is being treated under the unintentional provisions of 37 CFR 1.137(b), to revive the instant nonprovisional application.

The petition is **DISMISSED**.

Any request for reconsideration of this decision must be submitted within TWO (2) MONTHS from the mail date of this decision. Extensions of time under 37 CFR 1.136(a) are permitted. The reconsideration request should include a cover letter entitled "Renewed Petition under 37 CFR 1.137(b)." This is **not** final agency action within the meaning of 5 U.S.C. § 704. No additional petition fee is required.

Petitioner states that the instant non-provisional application is the subject of an application filed in a foreign country and the U. S. Patent and Trademark Office was unintentionally not notified of this filing within 45 days subsequent to the filing of the subject application in a foreign country. A review of the file record shows that a Request to Rescind was filed on June 13, 2003. However, petitioner has not provided the exact filing date of the foreign application. Before a proper determination on the merits of the petition can be decided, petitioner must supply the filing date of the foreign application.

Further correspondence with respect to this matter should be addressed as follows:

By mail: Mail Stop PETITION
Commissioner for Patents
Post Office Box 1450
Alexandria, VA 22313-1450

By hand: Crystal Plaza Four, Suite 3C23
2201 South Clark Place
Arlington, VA 22202

By Fax: (703) 308-6916
ATTN: Office of Petitions

Telephone inquiries concerning this decision should be directed to the undersigned at (703) 306-3475.

Marianne E. Morgan
Petitions Examiner
Office of Petitions
Office of the Deputy Commissioner
for Patent Examination Policy

UNITED STATES PATENT AND TRADEMARK OFFICE

Commissioner for Patents
United States Patent and Trademark Office
P. O. Box 1450
Alexandria, VA 22313-1450
www.uspto.gov

Paper No. 10

Foley and Lardner
P. O. Box 80278
San Diego, CA 92138-0278

COPY MAILED

OCT 06 2003

OFFICE OF PETITIONS

In re Application of	:	
Susan L. Mooberry, et al.	:	
Application No. 10/126,674	:	DECISION GRANTING PETITION
Filed: April 19, 2002	:	UNDER 37 CFR 1.137(b)
Attorney Docket No. UTAH1100-1(074942-0203)	:	

This is a decision on the petition, filed September 24, 2003, which is being treated as a petition under 37 CFR 1.137(b) to revive the instant nonprovisional application for failure to timely notify the U.S. Patent and Trademark (USPTO) of the filing of an application in a foreign country, or under a multinational treaty that requires publication of applications eighteen months after filing. *See* 37 CFR 1.137(f).

The petition is **GRANTED**.

Petitioner states that the instant nonprovisional application is the subject of an application filed in an eighteen-month publication country on January 26, 2001. However, the USPTO was unintentionally not notified of this filing within 45 days subsequent to the filing of the subject application in an eighteen-month publication country.

In view of the above, this application became abandoned pursuant to 35 U.S.C. § 122(b)(2)(B)(iii) and 37 CFR 1.213(c) for failure to timely notify the Office of the filing of an application in a foreign country or under a multilateral international agreement that requires publication of applications 18 months after filing.

A petition to revive an application abandoned pursuant to 35 U.S.C. 122(b)(2)(B)(iii) for failure to notify the USPTO of a foreign filing must be accompanied by:

(1) the required reply which is met by the notification of such filing in a foreign country or under a multinational treaty;
(2) the petition fee as set forth in 37 CFR 1.17(m); and
(3) a statement that the entire delay in filing the required reply from the due date of the reply until the filing of a grantable petition was unintentional.

The instant petition has been found to be in compliance with 37 CFR 1.137(b). Accordingly, the failure to timely notify the USPTO of a foreign or international filing within 45 days after the date of filing of such foreign or international application as provided by 35 U.S.C. § 122(b)(2)(B)(iii) and 37 CFR 1.213(c) is accepted as having been unintentionally delayed.

The previous Request and Certification under 35 U.S.C. § 122(b)(2)(B)(i) has been rescinded

Telephone inquiries concerning this decision should be directed to the undersigned at (703) 306-3475.

This application is being forwarded to Technology Center Art Unit 1600 for examination in due course.

Marianne E. Morgan

Marianne E. Morgan
Petitions Examiner
Office of Petitions
Office of the Deputy Commissioner
for Patent Examination Policy

UNITED STATES PATENT AND TRADEMARK OFFICE

COMMISSIONER FOR PATENTS
UNITED STATES PATENT AND TRADEMARK OFFICE
P.O. BOX 1450
ALEXANDRIA, VA 22313-1450
www.uspto.gov

FOLEY & LARDNER LLP
P.O. BOX 80278
SAN DIEGO CA 92138-0278

COPY MAILED

SEP 15 2008

OFFICE OF PETITIONS

In re Application :
Mooberry, et al. :
Application No. 10/126,674 : PATENT TERM ADJUSTMENT
Filed: April 19, 2002 :
Dkt. No.: UTAH1100-1 :

This is a decision on the "APPLICATION FOR PATENT TERM ADJUSTMENT UNDER 37 C.F.R. § 1.705(b)," filed January 14, 2008.

The application for patent term adjustment (PTA) under 37 CFR 1.705(b) is **HELD IN ABEYANCE IN PART**.

The Determination of Patent Term Adjustment under 35 U.S.C. 154(b), mailed October 18, 2007, indicated a patent term adjustment (PTA) to date of 405 days. The instant application for PTA was timely filed January 14, 2008, at the time of submission of the issue fee payment. Applicants argue that the application is entitled to an additional adjustment of 608 days for failure to issue the patent within three years of the date that the application was filed.

The correct PTA at the time of the allowance is 405 days, as indicated on the Determination of Patent Term Adjustment mailed May 24, 2007.

Applicants herein do not dispute the patent term adjustment (PTA) accorded to date (405 days).

However, the instant application for patent term adjustment requests reconsideration of the patent term adjustment as it relates to the Office's failure to issue the patent within three years of the filing date of the application. A decision is being **held in abeyance** until after the actual patent date. Knowledge of the actual date the patent issues is required to calculate the amount, if any, of additional patent term for Office failure to issue the patent within three years. *See*, 37 CFR 1.703(b).

Applicants are given **TWO (2) MONTHS** from the issue date of the patent to file a written request for reconsideration of the patent term adjustment for Office failure to issue the patent within three years. A copy of this decision should accompany the request. Applicants may seek such consideration without payment of an additional fee. However, as to all other bases for seeking reconsideration of the patent term adjustment indicated in the patent, all requirements of 37 CFR 1.705(d) must be met. Requests for reconsideration on other bases must be timely filed and must include payment of the required fee.

Applicants are reminded that if an application is entitled to an adjustment under 35 USC 154(b)(1)(B), the entire period during which the application was pending (except for periods excluded under 35 USC 154(b)(1)(B)(i)-(iii)), and not just the period beginning three years after the actual filing date of the application, is the period of delay under 35 USC 154(b)(1)(B) in determining whether periods of delay overlap under 35 USC 154(b)(2)(A).

Thus, any days of delay for Office issuance of the patent more than three years after the filing date of the application which overlap with the days of patent term adjustment accorded prior to the issuance of the patent will not result in any additional patent term adjustment. *See*, 35 USC 154(b)(1)(B), 35 USC 154(b)(2)(A), and 37 CFR § 1.703(f). *See, also, Revision of Patent Term Extension and Patent Term Adjustment Provisions; Final Rule*, 69 Fed. Reg. 21704 (April 22, 2004).

Applicants are further advised that the patent term adjustment indicated in the patent will include any additional patent term accrued pursuant to §§ 1.702(a)(4) and 1.702(b).

Submission of the patent term adjustment application fee is a prerequisite prior to treatment on the merits of any application for patent term adjustment. Accordingly, applicants' request for waiver of the fee is hereby DISMISSED.

The required fee of $200.00 has been charged to applicants' deposit account, as authorized. No additional fee will be required if applicants are solely requesting reconsideration of additional time related to failing to issue the patent within three years in accordance with 37 CFR 1.702(b).

This application is being forwarded to the Office of Patent Publication for processing into a patent.

Telephone inquiries specific to this matter should be directed to Petitions Attorney Alesia M. Brown at (571) 272-3205.

Kery Fries
Senior Legal Advisor
Office of Patent Legal Administration
Office of Deputy Commissioner
for Patent Examination Policy

UNITED STATES PATENT AND TRADEMARK OFFICE

COMMISSIONER FOR PATENTS
UNITED STATES PATENT AND TRADEMARK OFFICE
P.O. BOX 1450
ALEXANDRIA, VA 22313-1450
www.uspto.gov

FOLEY & LARDNER LLP
P.O. BOX 80278
SAN DIEGO CA 92138-0278

COPY MAILED

SEP 08 2009

OFFICE OF PETITIONS

In re Patent No. 7,435,754
Issued: October 14, 2008
Application No. 10/126,674
Filed: April 19, 2002
Dkt. No.: UTAH1100-1

: PATENT TERM ADJUSTMENT

This is a decision on the "REQUEST FOR RECONSIDERATION OF PATENT TERM ADJUSTMENT UNDER 37 C.F.R § 1.705," filed December 3, 2008. This matter is being properly treated as an application for patent term adjustment pursuant to 37 CFR 1.705(d).

The request for reconsideration of patent term adjustment (PTA) is **DISMISSED**.

The above-identified application matured into U.S. Pat. No. 7,435,754 on October 14, 2008. The patent issued with a PTA of 1,063 days. The request for reconsideration of patent term adjustment was timely filed within two months of the issue date of the patent. See, 37 CFR 1.705(d). Patentees request that the patent term adjustment be increased from 1,063 days to 1,491 days.

Patentees request reconsideration of the patent term adjustment based on the decision in Wyeth v. Dudas, 580 F. Supp. 2d 138, 88 U.S.P.Q. 2d 1538 (D.D.C. 2008). Patentees contend that pursuant to Wyeth, a PTO delay under 35 U.S.C. 154(b)(1)(A) overlaps with a delay under 35 U.S.C. 154(b)(1)(B) only if the delays occur on the same day.

Patentees' calculation of adjustment asserts that the following adjustments do not overlap: a three year delay by the Office, pursuant to 37 CFR 1.703(b), of 933 days and the period of adjustment due to examination delay, pursuant to 37 CFR 1.702(a), of 769 days. The 933-day period is calculated based on the application having been filed under 35 U.S.C. 111(a) on April 19, 2002, and the patent having been issued on October 14, 2008. Patentees assert that in addition to this 933-day period, they are entitled to a period of adjustment due to examination delay pursuant to 37 CFR 1.702(a) of 769 days.

Under 37 CFR 1.703(f), patentees are entitled to a period of patent term adjustment equal to the period of delays based on the grounds set forth in 37 CFR 1.702 reduced by the period of time equal to the period of time during which patentees failed to engage in reasonable efforts to conclude prosecution pursuant to 37 CFR 1.704. In other words, patentees are entitled to the period of Office delay reduced by the period of applicant delay.

The Office agrees that certain action was not taken within a specified time frame, and, thus, the entry of a period of adjustment of 769 days is correct. At issue is whether patentees should accrue an additional 1,274 days of patent term adjustment for the Office taking in excess of three years to issue the patent as well as 769 days for Office failure to take a certain action within a specified time frame (or examination delay).

The Office contends that the 769 days of examination delay overlaps with the 1,274 days of delay in issuance of the patent. Patentees' calculation of the period of overlap is inconsistent with the Office's interpretation of this provision. 35 U.S.C. 154(b)(2)(A) limits the adjustment of patent term, as follows:

> To the extent that the periods of delay attributable to grounds specified in paragraph (1) overlap, the period of any adjustment granted under this subsection shall not exceed the actual number of days the issuance of the patent was delayed.

Likewise, 35 CFR 1.703(f) provides that:

> To the extent that periods of delay attributable to the grounds specified in § 1.702 overlap, the period of adjustment granted under this section shall not exceed the actual number of days the issuance of the patent was delayed.

As explained in Explanation of 37 CFR 1.703(f) and of the United States Patent and Trademark Office Interpretation of 35 U.S.C. 154(b)(2)(A), 69 Fed. Reg. 34283 (June 21, 2004), the Office interprets 35 U.S.C. 154(b)(2)(A) as permitting either patent term adjustment under 35 U.S.C. 154(b)(1)(A)(i)-(iv), or patent term adjustment under 35 U.S.C. 154(b)(1)(B), but not as permitting patent term adjustment under both 35 U.S.C. 154(b)(1)(A)(i)-(iv) and 154(b)(1)(B). Accordingly, the Office implements the overlap provision as follows:

> If an application is entitled to an adjustment under 35 U.S.C. 154(b)(1)(B), the entire period during which the application was pending (except for periods excluded under 35 U.S.C. 154(b)(1)(B)(i)-(iii)), and not just the period beginning three years after the actual filing date of the application, is the period of delay under 35 U.S.C. 154(b)(1)(B) in determining whether periods of delay overlap under 35 U.S.C. 154(b)(2)(A). Thus, any days of delay for Office issuance of the patent more than 3 years after the filing date of the application, which overlap with the days of patent term adjustment accorded prior to the issuance of the patent will not result in any additional patent term adjustment. See 35 U.S.C. 154(b)(1)(B), 35 U.S.C. 154(b)(2)(A), and 37 CFR § 1.703(f). See Changes to Implement Patent Term Adjustment Under Twenty Year Term; Final Rule, 65 Fed. Reg. 56366 (Sept. 18, 2000). See, also, Revision of Patent Term Extension and Patent Term Adjustment Provisions; Final Rule, 69 Fed. Reg. 21704 (April 22, 2004), 1282 Off. Gaz. Pat. Office 100 (May 18, 2004). See, also, Explanation of 37 CFR 1.703(f) and of the United States Patent and Trademark Office Interpretation of 35 U.S.C. 154(b)(2)(A), 69 Fed. Reg. 34283 (June 21, 2004).

The current wording of § 1.703(f) was revised in response to the misinterpretation of this provision by a number of Patentees. The rule was slightly revised to more closely track the corresponding language of 35 U.S.C. 154(b)(2)(A). The relevant portion differs only to the extent that the statute refers back to provisions of the statute whereas the rule refers back to sections of the rule. This was not a substantive change to the rule nor did it reflect a change of the Office's interpretation of 35 U.S.C. 154(b)(2)(A). As stated in the Explanation of 37 CFR 1.703(f) and of the United States Patent and Trademark Office Interpretation of 35 U.S.C. 154(b)(2)(A), the Office has consistently taken the position that if an application is entitled to an adjustment under the three-year pendency provision of 35 U.S.C. 154(b)(1)(B), the entire period during which the application was pending before the Office (except for periods excluded under 35 U.S.C. 154(b)(1)(B)(i)-(iii)), and not just the period beginning three years after the actual filing date of the application, is the relevant period under 35 U.S.C. 154(b)(1)(B) in determining whether periods of delay "overlap" under 35 U.S.C. 154(b)(2)(A).

This interpretation is consistent with the statute. Taken together the statute and rule provide that to the extent that periods of delay attributable to grounds specified in 35 U.S.C. 154(b)(1) and in corresponding § 1.702 overlap, the period of adjustment granted shall not exceed the actual number of days the issuance of the patent was delayed. The grounds specified in these sections cover the A) guarantee of prompt Patent and Trademark Office responses, B) guarantee of no more than 3-year application pendency, and C) guarantee or adjustments for delays due to interference, secrecy orders and appeals. A section by section analysis of 35 U.S.C. 154(b)(2)(A) specifically provides that:

> Section 4402 imposes limitations on restoration of term. In general, pursuant to [35 U.S.C.] 154(b)(2)(A)-(C), total adjustments granted for restorations under [35 U.S.C. 154](b)(1) are reduced as follows: (1) To the extent that there are multiple grounds for extending the term of a patent that may exist simultaneously (e.g., delay due to a secrecy order under [35 U.S.C.] 181 and administrative delay under [35 U.S.C.] 154(b)(1)(A)), the term should not be extended for each ground of delay but only for the actual number of days that the issuance of a patent was delayed; See, 145 Cong. Rec. S14,718[1].

As such, the period for over three-year pendency does not overlap only to the extent that the actual dates in the period beginning three years after the date on which the application was filed overlap with the actual dates in the periods for failure of the Office to take action within specified time frames. In other words, consideration of the overlap does not begin three years after the filing date of the application.

---

[1] The AIPA is title IV of the Intellectual Property and Communications Omnibus Reform Act of 1999 (S. 1948), which was incorporated and enacted as law as part of Pub. L. 106-113. The Conference Report for H.R. 3194, 106th Cong. 1st Sess. (1999), which resulted in Pub. L. 106-113, does not contain any discussion (other than the incorporated language) of S. 1948. A section`-by-section analysis of S. 1948, however, was printed in the Congressional Record at the request of Senator Lott, See 145 Cong. Rec. S14,708-26 (1999)(daily ed. Nov. 17, 1999).

In this instance, the relevant period under 35 U.S.C. 154(b)(1)(B) in determining whether periods of delay "overlap" under 35 U.S.C. 154(b)(2)(A) is the entire period during which the application was pending before the Office, April 19, 2002, to the date that the patent issued, October 14, 2008. Prior to the issuance of the patent, 769 days of patent term adjustment were accorded for the Office failing to respond within a specified time frame during the pendency of the application.

The application actually issued three years and 1,274 days after its filing date. The Office did not delay 769 days and then delay an additional 1,274 days. Accordingly, 1,274 days of patent term adjustment, the actual period of delay in issuance of the patent, was properly entered because the 769 days of examination delay overlaps with the 1,274 days of delay in the issuance of the patent. Entry of both periods is not warranted.

In view thereof, no adjustment to the patent term will be made.

The Office acknowledges submission of the required application fee of $200.00. See, 37 CFR 1.18(e).

Telephone inquiries specific to this matter should be directed to the undersigned at (571) 272-3205.

Alesia M. Brown
Petitions Attorney
Office of Petitions

UNITED STATES PATENT AND TRADEMARK OFFICE

Commissioner for Patents
United States Patent and Trademark Office
P.O. Box 1450
Alexandria, VA 22313-1450
www.uspto.gov

WORKMAN NYDEGGER/MICROSOFT
1000 EAGLE GATE TOWER
60 EAST SOUTH TEMPLE
SALT LAKE CITY, UT 84111

COPY MAILED

MAY 27 2009

OFFICE OF PETITIONS

In re Application of
David J. Cheng, et. al.
Application No. 10/125,677
Filed: April 18, 2002
Attorney Docket No. 14531.141

DECISION ON PETITION
UNDER 37 CFR 1.137(b)

This is a decision on the petition, filed January 28, 2009, which is being treated as a petition under 37 CFR 1.137(b) to revive the instant nonprovisional application for failure to timely notify the U.S. Patent and Trademark (USPTO) of the filing of an application in a foreign country, or under a multinational treaty that requires publication of applications eighteen months after filing. *See* 37 CFR 1.137(f).

The above-identified application has been abandoned for an extended period of time. The Patent and Trademark Office is relying on petitioner's duty of candor and good faith and accepting the statement that the entire delay in filing the required reply from the due date for the reply until the filing of a grantable petition pursuant to 37 CFR 1.137(b) was unintentional. See Changes to Patent Practice and Procedure, 62 Fed. Reg. at 53160 and 53178; 1203 Off. Gaz. Pat. Office at 88 and 103 (responses to comments 64 and 109) (applicant obligated under 37 CFR 10.18 to inquire into the underlying facts and circumstances when providing the statement required by 37 CFR 1.137(b) to the Patent and Trademark Office).

The petition is **GRANTED**.

Petitioner states that the instant nonprovisional application is the subject of an application filed in an eighteen-month publication country on February 26, 2003. However, the USPTO was unintentionally not notified of this filing within 45 days subsequent to the filing of the subject application in an eighteen-month publication country.

In view of the above, this application became abandoned pursuant to 35 U.S.C. § 122(b)(2)(B)(iii) and 37 CFR 1.213(c) for failure to timely notify the Office of the filing of an

application in a foreign country or under a multilateral international agreement that requires publication of applications 18 months after filing.

A petition to revive an application abandoned pursuant to 35 U.S.C. 122(b)(2)(B)(iii) for failure to notify the USPTO of a foreign filing must be accompanied by:

(1) the required reply which is met by the notification of such filing in a foreign country or under a multinational treaty;
(2) the petition fee as set forth in 37 CFR 1.17(m); and
(3) a statement that the entire delay in filing the required reply from the due date of the reply until the filing of a grantable petition was unintentional.

37 CFR 1.137(b)(3) requires a statement that the entire delay in filing the required reply from the due date for the reply until the filing of a grantable petition pursuant to 37 CFR 1.137(b) was unintentional. Since the statement contained in the instant petition varies from the language required by 37 CFR 1.137(b)(3), the statement is being construed as the statement required by 37 CFR 1.137(b)(3) and petitioner must notify the Office if this is **not** a correct interpretation of the statement.

The instant petition has been found to be in compliance with 37 CFR 1.137(b). Accordingly, the failure to timely notify the USPTO of a foreign or international filing within 45 days after the date of filing of such foreign or international application as provided by 35 U.S.C. § 122(b)(2)(B)(iii) and 37 CFR 1.213(c) is accepted as having been unintentionally delayed.

The previous Request and Certification under 35 U.S.C. § 122(b)(2)(B)(i) has been rescinded. A Notice Regarding Rescission of Nonpublication Request which sets forth the projected publication date of September 3, 2009 accompanies this decision on petition.

This application is being referred to Technology Center Art Unit 2425for examination in due course.

Telephone inquiries concerning this decision should be directed to the undersigned at (571) 272-3226.

/Andrea Smith/
Andrea Smith
Petitions Examiner
Office of Petitions

ATTACHMENT: Notice Regarding Rescission of Nonpublication Request

UNITED STATES PATENT AND TRADEMARK OFFICE

UNITED STATES DEPARTMENT OF COMMERCE
United States Patent and Trademark Office
Address: COMMISSIONER FOR PATENTS
P.O. Box 1450
Alexandria, Virginia 22313-1450
www.uspto.gov

APPLICATION NUMBER	FILING OR 371(C) DATE	FIRST NAMED APPLICANT	ATTY. DOCKET NO./TITLE
10/125,677	04/18/2002	David J. Cheng	14531.141

CONFIRMATION NO. 2222

47973
WORKMAN NYDEGGER/MICROSOFT
1000 EAGLE GATE TOWER
60 EAST SOUTH TEMPLE
SALT LAKE CITY, UT 84111

NONPUBLICATION RESCISSION LETTER

OC000000036164202

Date Mailed: 05/27/2009

Communication Regarding Rescission Of Nonpublication Request and/or Notice of Foreign Filing

Applicant's rescission of the previously-filed nonpublication request and/or notice of foreign filing is acknowledged. The paper has been reflected in the Patent and Trademark Office's (USPTO's) computer records so that the earliest possible projected publication date can be assigned.

The projected publication date is 09/03/2009.

If applicant rescinded the nonpublication request before or on the date of "foreign filing,"[1] then no notice of foreign filing is required.

If applicant foreign filed the application after filing the above application and before filing the rescission, and the rescission did not also include a notice of foreign filing, then a notice of foreign filing (not merely a rescission) is required to be filed within 45 days of the date of foreign filing. See 35 U.S.C. § 122(b)(2)(B)(iii), and Clarification of the United States Patent and Trademark Office's Interpretation of the Provisions of 35 U.S.C. § 122(b)(2)(B)(ii)-(iv), 1272 Off. Gaz. Pat. Office 22 (July 1, 2003).

If a notice of foreign filing is required and is not filed within 45 days of the date of foreign filing, then the application becomes abandoned pursuant to 35 U.S.C. § 122(b)(2)(B)(iii). In this situation, applicant should either file a petition to revive or notify the Office that the application is abandoned. See 37 CFR 1.137(f). Any such petition to revive will be forwarded to the Office of Petitions for a decision. Note that the filing of the petition will not operate to stay any period of reply that may be running against the application.

Questions regarding petitions to revive should be directed to the Office of Petitions at (571) 272-3282.

[1] Note, for purpose of this notice, that "foreign filing" means "filing an application directed to the same invention in another country, or under a multilateral international agreement, that requires publication of applications 18 months after filing".

/amsmith/

Office of Data Management, Application Assistance Unit (571) 272-4000, or (571) 272-4200, or 1-888-786-0101

UNITED STATES PATENT AND TRADEMARK OFFICE

Commissioner for Patents
United States Patent and Trademark Office
P.O. Box 1450
Alexandria, VA 22313-1450
www.uspto.gov

APR -5 2006

Mr. Dennis Braswell
105 Soost Ct.
Mobile AL 36608

In re Application of: SCHROEDER et al. :
Appl. No.: 10/126,702 : DECISION ON PETITION
Filed: April 19, 2002 :
For: FLEXIBLE PACKAGING :

This is a decision on the petition filed on November 15, 2005 by which petitioner requests entry of a notice of appeal, entry of an appeal brief, and suspension of any rules which would otherwise stand in the way of the relief applicant seeks. The petition is stylized as being under 37 CFR 1.181, 1.182 and 1.183. A fee of $400 has been submitted. Pursuant to 37 CFR 1.4(c) petitioner is reminded different matters may be considered by different branches or sections of the USPTO. In order to avoid confusion and delay, each distinct subject, inquiry or order must be contained in a separate paper. In order to expedite matters the Technology Center has construed the petition as a request for supervisory review under 37 CFR 1.181 and if dismissed, will forward the paper on to the appropriate office for consideration of the petition under 1.182/1.183.

The petition is dismissed.

Review of the application and of the claims shows that an Office action was issued in the instant file on February 25, 2005. On March 25, 2005 petitioner filed a substantive response to the Office Action. On April 8, 2005, petitioner filed a Notice of Appeal. On June 6, 2005, petitioner filed an Appeal Brief. On July 22, 2005, the examiner promulgated a Final Rejection, noting that the Notice of Appeal and Appeal Brief were premature. Petitioner requests entry of the April 8, 2005 Notice of Appeal, treatment of the July 22, 2005 Final Rejection as the Examiner's Answer, and the setting of a two month period of reply from the date of the granting of the petition for the filing of a Reply Brief, and suspension of any rules that would otherwise stand in the way of the relief petitioner seeks. In support of this petition, petitioner opines 35 USC 134 "An applicant for a patent, any of whose claims has been twice rejected, may appeal from the decision of the primary examiner to the Board of Patent Appeals and Interferences, having once paid the fee for such appeal" and 37 CFR41.31(a) which reflects like language. Petitioner submits as the claims have been twice rejected and the notice of appeal was filed within two months of the rejection thereby being filed well within the period for response set by the February rejection, the appeal is proper and timely and the examiner lacks authority to deny a right expressly granted by statute.

37 CFR 41.31 (a) states:

§ 41.31 Appeal to Board.

(a) Who may appeal and how to file an appeal .

(1) Every applicant, any of whose claims has been twice rejected, may appeal from the decision of the examiner to the Board by filing a notice of appeal accompanied by the fee set forth in § 41.20(b)(1) within the time period provided under § 1.134 of this title for reply.

37 CFR 1.134 states:

§ 1.134 Time period for reply to an Office action.

An Office action will notify the applicant of any non-statutory or shortened statutory time period set for reply to an Office action. Unless the applicant is notified in writing that a reply is required in less than six months, a maximum period of six months is allowed.

Respectfully, petitioner's position overlooks the petitioner's filing of an Amendment to the merits on March 25, 2005 in response to the February 25, 2005 Office Action. The filing of this amendment stopped the period for response under 37 CFR 1.134, as it constituted a reply under 37 CFR 1.134. Supplemental replies are not entered as a matter of right. See 37 CFR 1.111(a)(2). Further, noting Rules of Practice Before the Board of Patent Appeals and Interferences; Final Rule (Federal Register/Vol 69, No. 155/Thursday August 12, 2004 at 49973-49974) "Both former 37 CFR 1.191(a) (2003) and 37 CFR 41.31(a)(1) are more restrictive than 35 USC 134 in that an appeal must be filed within the time period provided under 37 CFR 1.134 for response to either a final rejection or a non-final rejection which rejects the claims for a second time, as appropriate. For example, an applicant for a patent whose claims have been twice rejected but not finally rejected, may appeal from the decision of the examiner to the Board by filing a notice of appeal accompanied by the fee set forth in 37 CFR 41.20 (b)(1) within the time period provided under 37 CFR 1.134. However, if such an applicant files an amendment within the time period provided under 37 CFR 1.134, the applicant *may no*t file an appeal outside the time period provided under 37 CFR 1.134. *In such a situation, the applicant must wait for a new rejection by the examiner before an appeal can be filed.*"

Accordingly, the examiners treatment of the Notice of Appeal and Appeal Brief as untimely in the Final Rejection promulgated July 22, 2005 appears appropriate. As the actions of the examiner are neither arbitrary nor capricious, or amount to an abuse of discretion, there appears to be no basis for granting any of the relief requested under 37 CFR 1.181. Petitioner is entitled to request reconsideration of this decision provided that the request for reconsideration is filed within two months of the date of this decision. The file is being forwarded to the office of Petitions for consideration of petitioner's position under 37 CFR 1.182/1.183. However, noting that the mere filing of a petition will not stay any period for reply that may be running against the application, petitioner is advised of the availability of requesting reinstatement of the Appeal as proscribed by MPEP 1204.01.

PETITION DISMISSED

Frederick R. Schmidt, Director
Technology Center 3700

UNITED STATES PATENT AND TRADEMARK OFFICE

Commissioner for Patents
United States Patent and Trademark Office
P.O. Box 1450
Alexandria, VA 22313-1450
www.uspto.gov

Dennis Braswell
105 Soost Court
Mobile AL 36608

In re Application of:
Schroeder, Alfred A. et al
Serial No.: 10/126,702
Filed: Apr. 19, 2002
Docket: 0006-0033

Title: FLEXIBLE PACKAGING

DECISION ON RENEWED PETITION

This is a decision on the renewed petition filed on Jun. 6, 2006 by which petitioner requests reconsideration of the previous decision mailed Apr. 5, 2006, regarding the petition filed Nov. 15, 2005, and consideration of accepting the Notice of Appeal and Appeal Brief as timely filed after a compete response to the non-final Office action of Feb. 25, 2005. The delay in responding to this renewed petition is regretted. This petition is considered pursuant to 37 CFR § 1.181 only. No fee is required.

The petition is denied.

Prosecution History

Reference is made to the last paragraph of page one of the decision dated Apr. 5, 2006.

Petitioner's Arguments

In the present petition, the petitioner argues that the applicants have an absolute right to file an appeal if the claims were twice rejected under 37 § CFR 41.31(a). Petitioner also argues that the holding that the filing of Applicant's Mar. 25, 2005 amendment causes the stopping of the period for response is incorrect. Petitioner further argues that it is incorrect to subsequently hold the filing of an appeal before the examiner has mailed an action on the pending claims filed as part of the Mar. 25, 2005 amendment. Petitioner opines that the Notice of Appeal was filed within the period provided under 37 CFR § 1.134. Petitioner asserts that the decision of Apr. 5, 2006 rests upon the improper assumption that 37 CFR § 1.134 provides that the time period is stopped by the reply filed on Mar. 25, 2005. It is the petitioner's position that the notice of appeal of Apr. 8, 2005 was timely filed because the Feb. 25, 2005 Office action that provided a three-month shortened statutory period for reply and allowed for a three month extension period. Therefore,

the "time period for reply," and, consequently, the time for filing the notice of appeal, was three months, extendable up to an additional three months. Applicants filed within that time, and thus the Notice and Appeal Brief were timely filed. Petitioner's position is there is no provision either in regulation or case law that states that the time for filing an appeal is stopped by a reply.

Discussion and Analysis

If applicants' notice of appeal and subsequent appeal brief had been filed directly as a response to the Office action dated Jul. 22, 2005, this would have been a proper reply to the Office action. However, the filing of an entered amendment from a non-final Office action requires an Office reply to that action before the applicant can properly respond. The standing issues raised in the previous non-final Office action mailed Feb. 25, 2005 are potentially negated by the amendment filed Mar. 25, 2005 until a reply is provided to that amendment by the examiner. The Office action that applicants are appealing essentially does not exist, or rather, it is no longer standing as an Office reply is required to the Mar. 25, 2005 amendment. Since the examiner had not, at the time of applicants' appeal, responded to the standing, entered amendment (dated Mar. 25, 2005), applicants' appeal is untimely, i.e., presented before the known issues that would be standing for resolution in order to appeal. The appeal and appeal brief cannot supersede the standing amendment of record that had not yet been treated on the merits. And since the examiner had not yet replied to the amendment on the merits, the appeal improperly addresses a non-standing Office action as the Office action had not yet been provided and mailed in response to the standing amendment. As set forth in 37 CFR § 1.112:

37 CFR § 1.112 Reconsideration before final action.

After reply by applicant or patent owner (§ 1.111 or § 1.945) to a non-final action and any comments by an *inter partes* reexamination requester (§ 1.947), the application or the patent under reexamination will be reconsidered and again examined. The applicant, or in the case of a reexamination proceeding the patent owner and any third party requester, will be notified if claims are rejected, objections or requirements made, or decisions favorable to patentability are made, in the same manner as after the first examination (§ 1.104). Applicant or patent owner may reply to such Office action in the same manner provided in § 1.111 or § 1.945, with or without amendment, unless such Office action indicates that it is made final (§ 1.113) **or** an appeal (§ 1.191) has been taken (§ 1.116), or in an *inter partes* reexamination, that it is an action closing prosecution (§ 1.949) or a right of appeal notice (§ 1.953). [**Emphasis added.**]

It is clear from 37 CFR § 1.112 that an applicant has the option of filing a response to a non-final Office action in the way of a request for reconsideration, with or without amendment, or file an appeal. The regulation does not permit both.

In view of 37 CFR § 1.112, the position taken with respect to 37 CFR § 1.134 is proper. Moreover, the final Office action mailed Jul. 22, 2005 is a proper reply under 37 CFR § 1.113 to the amendment of Mar. 25, 2005. The standing Office action of Jul. 22, 2005 renders the filed Appeal Brief of Jun. 6, 2005 premature and non-responsive since the brief is not in response to the final rejection within this Office action. It is noted that petitioner has requested that the final rejection be treated as an examiner's answer to the brief. Under the circumstances, the requested relief to treat the Office action of Jul. 22, 2005 as an Examiner's Answer cannot be granted.

Since there is an outstanding Office action of Jul. 22, 2005 which has not been responded to by the applicants, the filing of the Notice of Appeal on Apr. 8, 2005 and the filing of the Appeal Brief on Jun. 6, 2005 is deemed to be premature and became non-responsive. In view of the fact that there was no response filed to the outstanding Office action of Jul. 22, 2005, then, this application became abandoned on Oct. 23, 2005.

Conclusion

The examiner's refusal of entry of the Notice of Appeal and Appeal Brief filed on Apr. 8, 2005 and Jun. 6, 2005, respectively, is deemed proper. Accordingly, the Office action of Jul. 22, 2005 stands. The application is abandoned because the applicant failed to respond to the Office action of Jul. 22, 2005.

In the original petition filed on Nov. 15, 2005, petitioner requests entry of a notice of appeal, entry of an appeal brief, and suspension of any rules which would otherwise stand in the way of the relief applicant seeks. The petition was stylized as being under 37 CFR 1.181, 1.182 and 1.183. A fee of $400 has been submitted. Pursuant to 37 CFR 1.4(c) petitioner is reminded that different matters may be considered by different branches or sections of the USPTO. In order to avoid confusion and delay, each distinct subject, inquiry or order must be contained in a separate paper.

Any request for reconsideration of this decision must be submitted within TWO (2) MONTHS from the mail date of this decision, 37 CFR 1.181(f). No extension of time under 37 CFR 1.136(a) is permitted. The reconsideration request should include a cover letter entitled "Renewed Petition under 37 CFR 1.181" and directed to the Office of the Deputy Commissioner for Patent Examination Policy at Mail Stop Petition, Commissioner for Patents, P.O. Box 1450, Alexandria, Virginia 22313-1450. See MPEP 1002.02(b).

Any inquiry regarding this decision should be directed to Henry C. Yuen, Special Programs Examiner, at 571-272-4856.

PETITION DENIED.

Karen M. Young
for Frederick R. Schmidt, Director
Technology Center 3700

UNITED STATES PATENT AND TRADEMARK OFFICE

COMMISSIONER FOR PATENTS
UNITED STATES PATENT AND TRADEMARK OFFICE
WASHINGTON, D.C. 20231
www.uspto.gov

Paper No. 6

Thomas F. Woods
Medtronic, Inc., MS LC 340
710 Medtronic Parkway
Minneapolis, MN 55432-5604

COPY MAILED

MAY 0 2 2003

OFFICE OF PETITIONS

In re Application of
Chester Struble, et al.
Application No. 10/126,710
Filed: April 22, 2002
Attorney Docket No. P-10282

ON PETITION

This is a decision on the petition under 37 CFR 1.137(b), filed December 23, 2002, to revive the above-identified application.

The petition is **GRANTED**.

The above-identified application became abandoned for failure to reply in a timely manner to the Notice To File Missing Parts of NonProvisional Application mailed May 23, 2002. The Notice set a period for reply of two(2) months from the mail date of the Notice. No extensions of time under the provisions of 37 CFR 1.136(a) were obtained. Accordingly, the above-identified application became abandoned on July 24, 2002.

Telephone inquiries concerning this decision should be directed to Cheryl Gibson-Baylor at (703)308-5111, or in her absence, Sherry Brinkley at (703)305-9220.

The application file is being forwarded to Office of Initial Patent Examination for further processing.

Cheryl Gibson-Baylor
Petitions Examiner
Office of Petitions
Office of the Deputy Commissioner
for Patent Examination Policy

/Sherry Brinkley
Petitions Examiner

UNITED STATES PATENT AND TRADEMARK OFFICE

COMMISSIONER FOR PATENTS
UNITED STATES PATENT AND TRADEMARK OFFICE
P.O. BOX 1450
ALEXANDRIA, VA 22313-1450
www.uspto.gov

MAIL Paper No. 3

NOV 24 2003

DIRECTOR OFFICE
TECHNOLOGY CENTER 2600

DANIELS DANIELS & VERDONIK, P.A.
SUITE 200 GENERATION PLAZA
1822 N.C. HIGHWAY 54 EAST
DURHAM NC 27713

In re Application of :
WAGNER et al. :
Application No. 10/126,711 :
Filed: April 19, 2002 :
For: METHOD OF ALLOWING POINT-IN-TIME :
VIEW OF DATA ON A DISK :

DECISION ON REQUEST TO WITHDRAW AS ATTORNEY

This is a decision on the request to withdraw as attorney/agent of record filed on October 17, 2003 (paper No. 2).

A grantable request to withdraw as attorney/agent of record must:
(1) indicate the present mailing address of the attorney(s)/agent(s) who seek(s) to withdraw,
(2) be signed by each attorney/agent seeking to withdraw or clearly be signed on their behalf,
(3) be *approved* at least thirty (30) days prior to the maximum extendable period for response to any outstanding Office Action, and
(4) indicate the address to which future correspondence should be mailed.

Petitioner has met all of the above. Accordingly, the request is **GRANTED**.

All attorneys listed in the request to withdraw have been withdrawn.

Given that the request to withdraw as attorneys/agents do not specifically request a change of address, all future communications from the Office will continue to be directed to the above-listed address, until a specific change of correspondence is specifically requested. Applicant is reminded of the obligation to promptly notify the Patent and trademark office of any change in correspondence address to ensure receipt of all communications from the office.

The file is being returned to the files repository.

Krista Zele
Special Program Examiner
Technology Center 2600
Communications
(703) 305-4701

UNITED STATES PATENT AND TRADEMARK OFFICE

Commissioner for Patents
United States Patent and Trademark Office
P.O. Box 1450
Alexandria, VA 22313-1450
www.uspto.gov

MARSHALL & MELHORN, LLC
FOUR SEAGATE
8TH FLOOR
TOLEDO, OH 43804

COPY MAILED

JAN 29 2008

OFFICE OF PETITIONS

In re Application of Shah et al. :
Application No. 10/126,713 : Decision on Petition
Filing Date: October 5, 2001 :
Attorney Docket No. 1-17728/5951 VIC :

This is a decision on the petition filed September 24, 2007, under 37 CFR 1.181 to withdraw the holding of abandonment of the above-identified application and reinstate an appeal.

The petition is **dismissed**.

A Notice of Appeal was filed January 26, 2006.

An Appeal Brief and a request for an extension of time were filed May 2, 2006.

A Notice of Non-Compliant Appeal Brief was mailed February 5, 2007. The Notice a period for reply of one (1) month or thirty (30) days (whichever is later). The Notice stated extensions of time under 37 CFR 1.136(a) were available.

In order to avoid dismissal of the appeal, Appellant was required to file a proper brief by March 7, 2007, or file a proper brief and payment for an appropriate extension of time, on or before Monday August 6, 2007. As stated in MPEP 1205.03,

> The appeal will be dismissed if the appellant does not timely file an amended brief, or files an amended brief which does not overcome all the reasons for noncompliance of which the appellant was notified.

As shown above, the Notice referenced MPEP 1205.03. Per MPEP 1205.03, when a Notice of Non-Compliant Appeal Brief is received, an applicant is "required" to file a "complete new brief" unless one of the following two situations is applicable.

(1) The Office held the brief to be defective solely due to appellant's failure to name the real party in interest.
(2) The Office held the brief to be defective solely due to appellant's failure to provide a summary of the claimed subject matter.

Since neither of the two situations above applied, appellant was required to submit a new and complete brief.

A new brief was filed March 6, 2007.

The new brief was incomplete and did not overcome all the prior reasons for noncompliance.

Petitioner never requested an extension of time. As a result, the appeal was dismissed unless a proper reply to the Notice of Non-Complaint Brief was filed on or before March 7, 2007. As shown above, a proper reply was not filed on or before March 7, 2007. Therefore, the appeal was dismissed. As no claim was allowed, the-above-identified application became abandoned on March 8. 2007.

A Notice was mailed July 16, 2007, informing appellant of problems with the brief filed March 6, 2007. However, just as Advisory Action does not set a new time period to reply, neither did the July 16, 2007 Notice. The time period to file a proper reply to the Notice of Non-Compliant Appeal Brief remained unchanged.

Since petition has not proven a timely and proper reply was filed in response to the Notice of Non-Compliant Appeal Brief mailed July 16, 2007, the application is abandoned.

Petitioner may wish to consider filing a petition to revive based on unintentional abandonment under 37 CFR 1.137(b). A grantable petition pursuant to 37 CFR 1.137(b) must be accompanied by the required reply (already submitted), the required petition fee ($1,540 for a small entity), and a statement that the **entire** delay in filing the required reply from the due date for the reply until the filing of a grantable petition pursuant to 37 CFR 1.137(b) was unintentional.

A copy of a PDF "fillable" blank form for a petition under 37 CFR 1.137(b) can be found at: http://www.uspto.gov/web/forms/sb0064_fill.pdf.

Any request for reconsideration must be submitted within TWO (2) MONTHS from the mail date of this decision. Extensions of time under 37 CFR 1.136(a) are NOT permitted.

A request for reconsideration can be filed electronically. If not filed electronically, the request should be addressed as follows:

By mail: Mail Stop Petition
Commissioner for Patents
P.O. Box 1450
Alexandria, VA 22313-1450

By facsimile: (571) 273-8300
Attn: Office of Petitions

By hand: U.S. Patent and Trademark Office
Customer Service Window
Randolph Building
401 Dulany Street
Alexandria, VA 22314

Telephone inquiries regarding this communication should be directed to Petitions Attorney Steven Brantley at (571) 272-3203.

Charles Steven Brantley
Senior Petitions Attorney
Office of Petitions

UNITED STATES PATENT AND TRADEMARK OFFICE

Commissioner for Patents
United States Patent and Trademark Office
P.O. Box 1450
Alexandria, VA 22313-1450
www.uspto.gov

MARSHALL & MELHORN, LLC
FOUR SEAGATE
8TH FLOOR
TOLEDO, OH 43804

COPY MAILED

JUN 19 2008

OFFICE OF PETITIONS

In re Application of Shah et al. :
Application No. 10/126,713 :
Filing Date: October 5, 2001 :
Attorney Docket No. 1-17728/5951 VIC :

Decision on Petition

This is a decision on the petition under 37 CFR 1.137(b), filed March 3, 2008, to revive the above-identified application.

The petition is **granted**.

A Notice of Appeal was filed January 26, 2006. An Appeal Brief and a request for an extension of time were filed May 2, 2006. A Notice of Non-Compliant Appeal Brief was mailed February 5, 2007. The Notice a period for reply of one (1) month or thirty (30) days (whichever is later). The Notice stated extensions of time under 37 CFR 1.136(a) were available. A new brief was filed March 6, 2007. The new brief was incomplete and did not overcome all the prior reasons for noncompliance. Therefore, the appeal was dismissed. As no claim was allowed, the application became abandoned on March 8, 2007. A Notice of Abandonment was mailed September 10, 2007.

The instant petition requests revival of the application.

Petitioner has submitted the required petition fee of $1,540. Petitioner submitted a new Appeal Brief on September 24, 2007. Petitioner has stated the entire delay in filing the required reply from the due date for the reply until the filing of a grantable petition pursuant to 37 CFR 1.137(b) was unintentional.

Petitioner has met the requirements to revive the above-identified application pursuant to 37 CFR 1.137(b). Therefore, the petition is granted and the application is revived.

Technology Center Art Unit 3673 will be informed of the instant decision and the Appeal Brief filed September 24, 2007, will be considered by the examiner in due course.

Telephone inquiries regarding this communication should be directed to Petitions Attorney Steven Brantley at (571) 272-3203.

Charles Steven Brantley
Senior Petitions Attorney
Office of Petitions

UNITED STATES PATENT and TRADEMARK OFFICE
UNDER SECRETARY OF COMMERCE FOR INTELLECTUAL
PROPERTY AND DIRECOR OF THE UNITED STATES PATENT
AND TRADEMARK OFFICE
WASHINGTON, D.C. 20231
WWW.USPTO.GOV

Mailed: JUN 16 2003

Paper Number 8
UR

In re application of Sonya N. Bourne et al. Serial No. 10/126,714 Filed: April 19, 2002 For: SINGLE STEP STERILIZATION WRAP SYSTEM	: : : : :	DECISION ON PETITION

This is a decision on the PETITION TO EXPUNGE UNDER 37 CFR 1.182, filed May 20, 2003 which has been accepted as a timely petition under 37 CFR 1.59(b) and MPEP 724.05, II, and is before the Group Director of Technology Center 1700 for consideration.

DECISION

A review of the petitioner's request and the application record indicates that the request to expunge from the file record the materials entitled:

a) a three-ring binder notebook entitled "Exhibits to Summary of One-Step™ Wrap Development" and b) "Appendix A" on May 20, 2003 in accordance with MPEP 724

should be granted. Each of the criteria for granting the request has been satisfied, see the MPEP 724.05. The subject information, however, must be retained for a period of a patent that may issue from the present application.

The petition is **GRANTED.**

Enclosures:
(1) The notebook, and "appendix A", both submitted on May 20, 2003 deemed proprietary.

10/126,714

Jacqueline M. Stone, Director
Technology Center 1700
Chemical and Materials Engineering

Kilpatrick Stockton LLP
1100 Peachtree Street, Suite 2800
Atlanta, GA 30309-4530

UNITED STATES PATENT AND TRADEMARK OFFICE

COMMISSIONER FOR PATENTS
UNITED STATES PATENT AND TRADEMARK OFFICE
WASHINGTON, D.C. 20231
www.uspto.gov

Paper No. 6

Medtronic, Inc.
710 Medtronic Parkway NE
MS-LC340
Minneapolis, MN 55432-5604

COPY MAILED

JAN 2 2 2003

OFFICE OF PETITIONS

In re Application of	:	
Lambert Muhlenberg, et. al.	:	
Application No. 10/126,733	:	ON PETITION
Filed: April 22, 2002	:	
Attorney Docket No. P-10194.00	:	

This is a decision on the petition under 37 CFR 1.137(b), filed December 24, 2002 by facsimile transmission, to revive the above-identified application.

The petition is **GRANTED**.

The above-identified application became abandoned for failure to reply in a timely manner to the Notice to File Missing Parts of Application (Notice) mailed June 3, 2002. The Notice set a period for reply of two (2) months from the mail date of the Notice. No extensions of time under the provisions of 37 CFR 1.136(a) were obtained. Accordingly, the above-identified application became abandoned after midnight August 3, 2002.

The application is being forwarded to the Office of Initial Patent Examination for further processing.

Telephone inquiries concerning this decision should be directed to Andrea Smith at (703) 308-6711.

Andrea Smith
Petitions Examiner
Office of Petitions
Office of the Deputy Commissioner
for Patent Examination Policy

UNITED STATES PATENT AND TRADEMARK OFFICE

Commissioner for Patents
United States Patent and Trademark Office
P.O. Box 1450
Alexandria, VA 22313-1450
www.uspto.gov

JOSEPH S TRIPOLI
THOMSON MULTIMEDIAL LICENSING INC
2 INDEPENDENCE WAY
P O BOX 5312
PRINCETON NJ 08543-5312

COPY MAILED

AUG 2 4 2006

OFFICE OF PETITIONS

In re Application of	:	
Hoover, et al.	:	
Application No. 10/126,743	:	ON PETITION
Filed: April 19, 2002	:	
Attorney Docket No. PU020114	:	

This is a decision on the petition to revive an abandoned application under 37 CFR 1.137(b), filed January 27, 2006.

The petition under 37 CFR 1.137(b) is **GRANTED**.

The above-identified application became abandoned for failure to timely file a response to the non-final Office action mailed July 7, 2005, which set a shortened statutory period for reply of three (3) months. No extensions of time under 37 CFR 1.136(a) were purchased. Accordingly, no reply having received, the application became abandoned on October 8, 2005. The mailing of this decision precedes the mailing of a Notice of Abandonment.

With the instant petition, petitioner paid the petition fee, submitted the required reply in the form of an Amendment, and made the proper statement of unintentional delay.

The matter is being forwarded to Group Art Unit 2614 for consideration of the Amendment filed January 27, 2006.

Telephone inquiries related to this decision should be directed to the undersigned at (571)272-3207.

Cliff Congo
Petitions Attorney
Office of Petitions

OIPE JC10
SEP 1 3 2002
PATENT & TRADEMARK OFFICE

03CO
Box Seq.

PB-0186

IN THE UNITED STATES PATENT AND TRADEMARK OFFICE

Application of:	J. Farchaus, III	Group Art Unit:	1633
Serial Number:	10/126,757	Examiner:	To be assigned
Filing Date:	April 19, 2002		
For:	Thermostable DNA Polymerases and Methods of Making Same		

Response to Notice to Comply with Requirements for Patent Applications Containing Nucleotide Sequence and/or Amino Acid Sequence Disclosures

U.S. Patent and Trademark Office
Box Sequence, P.O. Box 2327
Arlington, Virginia 22202

Sir:

In connection with the prosecution of the captioned application, and in response to the Notice to Comply with Requirements for Patent Applications Containing Nucleotide Sequence and/or Amino Acid Sequence Disclosures having a mailing date of August 30, 2002, Applicants submit the following:

1) An substitute computer readable form (CRF) copy of the "Sequence Listing" and a substitute paper copy of the sequence listing, both generated on an IBM computer using PatentIn, Version 3.1 Software.

2) Required statements:

A. Applicants aver that the sequence listings do not include any new matter.

B. Applicants aver that that the content of the sequence listing information recorded in computer readable form is identical to the written sequence listing provided on paper.

A copy of the Notice to Comply with Requirements for Patent Applications Containing Nucleotide Sequence and/or Amino Acid Sequence Disclosures having a mailing date of August 30,2002, is enclosed herewith. The notice was generated in response to the "CRF Problem Report", a copy of which is attached hereto. Applicants submit that no new amendment is necessary directing the entry of the sequence listing into the specification, as the data has not changed.

Please direct any remaining issues to Applicant's counsel at the telephone number provided below.

Respectfully submitted,

Stephen G, Ryan
Reg. No.: 39,015
Attorney for Applicants

Amersham Biosciences Corp.
800 Centennial Avenue
P. O. Box 1327
Piscataway, NJ 08855-1327

Tel: (732) 457-8071
Fax: (732) 457-8463

I hereby certify that this correspondence is being deposited with the United States Postal Service as first class mail in an envelope addressed to: Commissioner of Patents and Trademarks, Washington, D.C. 20231, on 10Sept02.

Melissa Leck

Signature

Date September 10, 2002

H:\DEPT\Law_Dept\IP Dept\Submission of Sequence Listing\Submission of Sequence Listing2-PB0186.doc

OIPE

OIPE JC10 SEP 13 2002 PATENT & TRADEMARK OFFICE

BIOTECHNOLOGY SYSTEMS BRANCH

0590
0815

CRF Problem Report

The Scientific and Technical Information Center (STIC) experienced a problem when processing the following computer readable form (CRF):

Application Serial Number: 10/126,757
Filing Date: 4/19/2002
Date Processed by STIC: 8/15/2002

STIC Contact: **Mark Spencer, 703-308-4212**

Nature of Problem:

The CRF (was):

____ (circle one) Damaged or Unreadable (for Unreadable, see attached)
____ Blank (no files on CRF) (see attached)
____ Empty file (filename present, but no bytes in file) (see attached)
____ Virus-infected. Virus name: _____ The STIC will not process the CRF.
____ Not saved in ASCII text
____ Sequence Listing was embedded in the file. According to Sequence Rules, submitted file should **only** be the Sequence Listing.
✓ Did not contain a Sequence Listing. (see attached sample)
____ Other:

PLEASE USE THE CHECKER VERSION 3.1 PROGRAM TO REDUCE ERRORS. SEE BELOW FOR ADDRESS:
http:/www.uspto.gov/web/offices/pac/checker

Applicants submitting genetic sequence information electronically on diskette or CD-Rom should be aware that there is a possibility that the disk/CD-Rom may have been affected by treatment given to all incoming mail.
Please consider using alternate methods of submission for the disk/CD-Rom or replacement disk/CD-Rom.
Any reply including a sequence listing in electronic form should NOT be sent to the 20231 zip code address for the United States Patent and Trademark Office, and instead should be sent via the following to the indicated addresses:

1. EFS-Bio (<**http://www.uspto.gov/ebc/efs/downloads/documents.htm**>, **EFS Submission User Manual** - ePAVE)
2. **U.S. Postal Service**: U.S. Patent and Trademark Office, Box Sequence, P.O. Box 2327, Arlington, VA 22202
3. **Hand Carry directly to:**
   U.S. Patent and Trademark Office, Technology Center 1600, Reception Area, 7th Floor, Examiner Name, Sequence Information, Crystal Mall One, 1911 South Clark Street, Arlington, VA 22202
   Or
   U.S. Patent and Trademark Office, Box Sequence, Customer Window, Lobby, Room 1B03, Crystal Plaza Two, 2011 South Clark Place, Arlington, VA 22202
4. **Federal Express, United Parcel Service, or other delivery service to:** U.S. Patent and Trademark Office, Box Sequence, Room 1B03-Mailroom, Crystal Plaza Two, 2011 South Clark Place, Arlington, VA 22202

Revised 01/29/2002

10/126,757

` CProjectData` ` ` ` 7Thermostable DNA Polymerases and Methods of Making Same' PB0186
10/126,757
2002-04-19´` Pyrococcus Kodakaraensis`

(sample of submitted file - If PatentIn software was used to create the submitted file, please contact Robert Wax at 703-306-4119 or 703-308-4216 for assistance)

UNITED STATES PATENT AND TRADEMARK OFFICE

COMMISSIONER FOR PATENTS
UNITED STATES PATENT AND TRADEMARK OFFICE
WASHINGTON, D.C. 20231
www.uspto.gov

APPLICATION NUMBER	FILING/RECEIPT DATE	FIRST NAMED APPLICANT	ATTORNEY DOCKET NUMBER
10/126,757	04/19/2002	Joseph W. Farchaus III	PB-0186

Amersham Biosciences Corp.
800 Centennial Avenue
Piscataway, NJ 08855

OIPE JC10
SEP 13 2002
PATENT & TRADEMARK OFFICE

CONFIRMATION NO. 3478
FORMALITIES LETTER
OC000000008717202

Date Mailed: 08/30/2002

NOTICE TO COMPLY WITH REQUIREMENTS FOR PATENT APPLICATIONS CONTAINING NUCLEOTIDE SEQUENCE AND/OR AMINO ACID SEQUENCE DISCLOSURES

Applicant is given **TWO MONTHS FROM THE DATE OF THIS NOTICE** within which to file the items indicated below to avoid abandonment. Extensions of time may be obtained under the provisions of 37 CFR 1.136(a).

- The computer readable form that has been filed with this application has been found to be damaged and/or unreadable as indicated on the attached CRF Diskette Problem Report. A substitute computer readable form must be submitted as required by 37 C.F.R. 1.825(d). Applicant must provide a substitute computer readable form (CRF) copy of the "Sequence Listing" and a statement that the content of the sequence listing information recorded in computer readable form is identical to the written (on paper or compact disc) sequence listing and, where applicable, includes no new matter, as required by 37 CFR 1.821(e), 1.821(f), 1.821(g), 1.825(b), or 1.825(d). If applicant desires the sequence listing in the instant application to be identical with that of another application on file in the U.S. Patent and Trademark Office, such request in accordance with 37 CFR 1.821(e) may be submitted in lieu of a new CRF.

For questions regarding compliance to these requirements, please contact:

- **For Rules Interpretation, call (703) 308-4216**
- **To Purchase PatentIn Software, call (703) 306-2600**
- **For PatentIn Software Program Help, call (703) 306-4119 or e-mail at patin21help@uspto.gov or patin3help@uspto.gov**

A copy of this notice MUST be returned with the reply

RECEIVED
SEP - 9 2002
ROYAL N. RONNING, JR.

Customer Service Center
Initial Patent Examination Division (703) 308-1202
PART 2 - COPY TO BE RETURNED WITH RESPONSE

UNITED STATES PATENT AND TRADEMARK OFFICE

Commissioner for Patents
United States Patent and Trademark Office
P.O. Box 1450
Alexandria, VA 22313-1450
www.uspto.gov

FINNEGAN, HENDERSON, FARABOW,
GARRETT & DUNNER, L.L.P.
1300 I STREET, N.W.
WASHINGTON DC 2005-3315

COPY MAILED

SEP 30 2004

OFFICE OF PETITIONS

ON PETITION

In re Application of :
Hideki Nakayama et al :
Application No. 10/126,776 :
Filed: April 22, 2002 :
Attorney Docket No. 07057.0024 :

This is a decision on the petition, filed September 24, 2004, under 37 CFR 1.313(c)(2) to withdraw the above-identified application from issue after payment of the issue fee.

The petition is **GRANTED**.

The above-identified application is withdrawn from issue for consideration of a submission under 37 CFR 1.114 (request for continued examination). See 37 CFR 1.313(c)(2).

Petitioner is advised that the issue fee paid on February 10, 2004 in the above-identified application cannot be refunded. If, however, the above-identified application is again allowed, petitioner may request that it be applied towards the issue fee required by the new Notice of Allowance.[1]

Telephone inquiries should be directed to the undersigned at (703) 305-8859.

The examiner of Technology Center AU 1753 will consider the request for continued examination under 37 CFR 1.114.

Karen Creasy

Karen Creasy
Petitions Examiner
Office of Petitions
Office of the Deputy Commissioner
for Patent Examination Policy

---

[1] The request to apply the issue fee to the new Notice may be satisfied by completing and returning the new Issue Fee Transmittal Form PTOL-85(b), which includes the following language thereon: "Commissioner for Patents is requested to apply the Issue Fee and Publication Fee (if any) or re-apply any previously paid issue fee to the application identified above." Petitioner is advised that, whether a fee is indicated as being due or not, the Issue Fee Transmittal Form **must** be completed and timely submitted to avoid abandonment. Note the language in bold text on the first page of the Notice of Allowance and Fee(s) Due (PTOL-85).

UNITED STATES PATENT AND TRADEMARK OFFICE

COMMISSIONER FOR PATENTS
UNITED STATES PATENT AND TRADEMARK OFFICE
P.O. BOX 1450
ALEXANDRIA, VA 22313-1450
www.uspto.gov

Paper No. _____

Date : September 30, 2004

TO : Director, Office of Patent Publication

FROM : Office of the Deputy Commissioner
for Patent Examination Policy

SUBJECT : Withdrawal from Issue of Application No. 10/126,776

Applicant(s) :Hideki Nakayama et al
Application No. :10/126,776
Filed :September 30, 2002

The above-identified application has been assigned Patent No. 6,803,516 and an issue date of October 12, 2004.

It is hereby directed that this application be withdrawn from issue at the request of the applicant.

Do not refund the issue fee.

The following erratum should be published in the Official Gazette if the above-identified application is published in the OG of October 12, 2004:

> "All reference to Patent No. 6,803,516 to Hideki Nakayama et al of Japan for THERMOPHOTOVOLTAIC POWER GENERATING APPARATUS appearing in the Official Gazette of October 12, 2004 should be deleted since no patent was granted."

Karen Creasy

Karen Creasy
Petitions Examiner
Office of Petitions
Office of the Deputy Commissioner
for Patent Examination Policy

CC: Paul Harrison, Crystal Park 3-441 (FAX-306-2737)
Deneise Boyd, Crystal Park 2, Suite 1100 (FAX-308-5413)
Mary Louise McAskill, Crystal Park 3-910 (FAX 305-4372)
Niomi Farmer, Crystal Park 3-910 (FAX-305-4372)
Mary E. Johnson (Cookie), P/OCS, CM1-6D07
Duane Davis (CDS), CM1-6A07
Tamara Greene, Crystal Park 3-908

UNITED STATES PATENT AND TRADEMARK OFFICE

Commissioner for Patents
United States Patent and Trademark Office
Washington, D.C. 20231
www.uspto.gov

Paper No. 6

MEDTRONIC INC
710 MEDTRONIC PARKWAY NE
MS-LC340
MINNEAPOLIS MN 55432-5604

COPY MAILED

APR 1 8 2003

OFFICE OF PETITIONS

In re Application of
Struble, et al.
Application No. 10/126,816
Filed: April 22, 2002
Attorney Docket No. P- 10283

DECISION ON PETITION

This is a decision on the petition under 37 CFR 1.137(b), filed December 31, 2002, which is instead being treated as a petition for a five month extension of time under 37 CFR 1.136(a).

The petition under 37 CFR 1.136(a) is **GRANTED.**

The petition under 37 CFR 1.137(b) is **DISMISSED AS MOOT.**

The above-identified application was filed on April 22, 2002, without an oath or declaration. Accordingly, a Notice to File Missing Parts of Nonprovisional Application was mailed on May 31, 2002. This Notice set a period for reply of two months from the mail date of the Notice to submit an executed oath or declaration (and surcharge for its late filing). Extensions of time under 37 CFR 1.136(a) were available.

In reply, applicant submitted an executed declaration, and filed a petition to revive an unintentionally abandoned application on December 31, 2002. This is the last day applicant could have timely replied to the Notice to File Missing Parts with the maximum allowable five month extension of time. As such, the application is not abandoned, and applicant's 37 CFR 1.137(b) petition is treated as a petition for a five month extension of time under 37 CFR 1.136(a).

The $1,970 fee for a five month extension of time has been charged to Deposit Account No. 13-2546, as authorized by applicant's instruction to the Commissioner to charge any additional fees. In addition, the $130 surcharge for late filing of the declaration has also been charged to the deposit account.

The application file is being forwarded to the Office of Initial Patent Examination for pre-examination processing.

Telephone inquiries related to this decision should be directed to the undersigned at (703) 305-0272.

Cliff Congo

Cliff Congo
Petitions Attorney
Office of Petitions

UNITED STATES PATENT AND TRADEMARK OFFICE

Commissioner for Patents
United States Patent and Trademark Office
P.O. Box 1450
Alexandria, VA 22313-1450
www.uspto.gov

LAM RESEARCH CORPORATION
4650 CUSHING PARKWAY CA-1
FREMONT CA 94538

COPY MAILED

AUG 2 3 2005

OFFICE OF PETITIONS

In re Application of	:	
Howald, Arthur M.	:	
Application No. 10/126,832	:	ON PETITION
Filed: April 18, 2002	:	
Attorney Docket No. LMRX-P075/P0329X	:	

This is a decision on the petition under 37 C.F.R. § 1.137(b), filed August 10, 2005, to revive the above-identified application.

The petition is **GRANTED.**

Petitioner has met the requirements to revive the above-identified application pursuant to 37 CFR 1.137(b).

There is no indication that the person signing the instant petition was ever given a power of attorney or authorization of agent to prosecute the above-identified application. If the person signing the instant petition desires to receive future correspondence regarding this application, the appropriate power of attorney or authorization of agent must be submitted. Accordingly, the change of correspondence address filed with the instant petition cannot be accepted because it was not signed by an attorney of record. See MPEP §§ 601.03 and 405. A courtesy copy of this decision is being mailed to the address given on the petition; however, the Office will mail all future correspondence solely to the address of record.

It is not apparent whether the statement of unintentional delay was signed by a person who would have been in a position of knowing that the entire delay in filing the required reply from the due date for the reply until the filing of a grantable petition pursuant to 37 CFR 1.137(b) was unintentional. Nevertheless, in accordance with 37 CFR 10.18, the statement is accepted as constituting a certification of unintentional delay. However, in the event that petitioner has no knowledge that the delay was unintentional, petitioner must make such an inquiry to ascertain that, in fact, the delay was unintentional. If petitioner discovers that the delay was intentional, petitioner must notify the Office.

The file is being forwarded to the Publishing Division for processing into a patent.

Telephone inquiries regarding this decision should be directed to the undersigned at (571) 272-3282.

Liana Chase
Petitions Examiner
Office of Petitions
Office of the Deputy Commissioner
for Patent Examination Policy

cc: IPSG, P.C.
P.O. BOX 700640
SAN JOSE, CA 95170-0640

#13

UNITED STATES PATENT AND TRADEMARK OFFICE

Commissioner for Patents
United States Patent and Trademark Office
Washington, D.C. 20231
www.uspto.gov

Paper No. 13

CAESAR, RIVISE, BERNSTEIN, COHEN &
POKOTILOW, LTD.
ATTN: ELAN
12TH FLOOR, SEVEN PENN CENTER
1635 MARKET STREET
PHILADELPHIA PA 19103-2212

COPY MAILED

JAN 23 2003

OFFICE OF PETITIONS

In re Application of	:
Daniel O'Mahony et al	:
Application No. 10/126,845	: DECISION ON PETITION
Filed: April 19, 2002	: UNDER 37 CFR 1.78(a)(6)
Attorney Docket No. E1067/20058	:

This is a decision on the petition under 37 CFR 1.78(a)(6), filed October 21, 2002, to accept an unintentionally delayed claim under 35 U.S.C. §119(e) for the benefit of a prior filed provisional application.

The petition is **Granted**.

A petition under 37 CFR 1.78(a)(6) is only applicable to those applications filed on or after November 29, 2000. Further, the petition is appropriate only after expiration of the period specified in 37 CFR 1.78(a)(5)(ii) and must be filed during the pendency of the nonprovisional application. In addition, the petition must be accompanied by:

(1) the surcharge set forth in 37 CFR 1.17(t);

(2) a statement that the entire delay between the date the claim was due under 37 CFR 1.78(a)(5)(i) and the date the claim was filed was unintentional; and

(3) the reference to the prior filed provisional application supplied in an application data sheet (ADS)(37 CFR 1.76) or as an amendment in the first sentence of the specification following the title. *See* 35 U.S.C. 119(e) and 37 CFR 1.78(a)(5)(iii). The

Commissioner may require additional information where there is a question whether the delay was unintentional.

The instant pending nonprovisional application was filed on April 19, 2002. The co-pending nonprovisional application, Application No. 09/671,089 was filed within twelve months of the filing date of the prior-filed provisional application, Application No. 60/156,246, which was filed on September 27, 1999, and for which priority is claimed. A reference to the prior-filed provisional application has been included in an amendment to the first sentence of the specification following the title.

The instant nonprovisional application was filed after November 29, 2000, and the claim for priority herein is submitted after expiration of the period specified in 37 CFR 1.78(a)(5)(ii). Also, the reference to the prior filed provisional application was submitted during the pendency of the nonprovisional application for which the benefit is sought. *See* 35 U.S.C. §119(e). Accordingly, having found that the instant petition satisfies the conditions of 37 CFR 1.78(a)(6) for acceptance of an unintentionally delayed claim for priority under 35 U.S.C. §119(e), the petition to accept an unintentionally delayed claim of benefit to prior-filed provisional Application No. 60/156,246 is granted.

The granting of the petition to accept the delayed benefit claim to the prior application under 37 CFR 1.78(a(6) should not be construed as meaning that the instant application is entitled to the benefit of the filing date of the prior application. In order for the instant application to be entitled to the benefit of the prior application, all other requirements under 35 U.S.C. §119(e) and 37 CFR 1.78(a)(4) and (a)(5) must be met. Accordingly, the examiner will, in due course, consider this benefit claim and determine whether the instant application is entitled to the benefit of the earlier filing date.

Any inquiries concerning this decision may be directed to Karen Creasy at (703) 305-8859.

The application is being forwarded to the Office of Initial Patent Examination for pre-examination processing, which will include the mailing of a corrected filing receipt with the projected publication date . Thereafter, the application will be forwarded to Technology Center AU 1653 for processing the amendment filed

October 21, 2002 and for consideration by the examiner of the claim under 35 U.S.C. §119(e) and 37 CFR 1.78(a)(5) for the benefit of the prior-filed provisional application, Application No. 60/156,246, filed on September 27, 1999.

Frances Hicks
Lead Petitions Examiner
Office of Petitions
Office of the Deputy Commissioner
for Patent Examination Policy

UNITED STATES PATENT AND TRADEMARK OFFICE

COMMISSIONER FOR PATENTS
UNITED STATES PATENT AND TRADEMARK OFFICE
WASHINGTON, D.C. 20231
www.uspto.gov

Paper No. 5

Medtronic, Inc.
710 Medtronic Parkway NE
MS-LC340
Minneapolis, MN 55432-5604

COPY MAILED

JAN 22 2003

OFFICE OF PETITIONS

In re Application of	:	
Chester L. Struble	:	
Application No. 10/126,858	:	ON PETITION
Filed: April 22, 2002	:	
Attorney Docket No. P-9463.00	:	

This is a decision on the petition under 37 CFR 1.137(b), filed December 19, 2002 by facsimile transmission, to revive the above-identified application.

The petition is **GRANTED**.

The above-identified application became abandoned for failure to reply in a timely manner to the Notice to File Missing Parts of Application (Notice) mailed May 30, 2002. The Notice set a period for reply of two (2) months from the mail date of the Notice. No extensions of time under the provisions of 37 CFR 1.136(a) were obtained. Accordingly, the above-identified application became abandoned after midnight July 30, 2002.

The application is being forwarded to the Office of Initial Patent Examination for further processing.

Telephone inquiries concerning this decision should be directed to Andrea Smith at (703) 308-6711.

Andrea Smith
Petitions Examiner
Office of Petitions
Office of the Deputy Commissioner
for Patent Examination Policy

UNITED STATES PATENT AND TRADEMARK OFFICE

Commissioner for Patents
United States Patent and Trademark Office
PO Box 1450
Alexandria, VA 22313-1450
www.uspto.gov

0 1 AUG 2003

Gardner & Groff, P.C.
Paper Mill Village, Building 23
600 Village Trace, Site 300
Marietta, GA 30067

In re Application of Schwab Application No.: 10/126,866 Filing Date: April 19, 2002 Attorney's Docket No.: 241907-1060 For: METHOD AND APPARATUS FOR FORMING GROUPS OF SHEETS FROM A PLURALITY OF SHEETS	DECISION ON PETITION UNDER 37 CFR 1.182

This decision concerns the "Resubmission of Request for Processing of Application as a National Phase Filing under 35 U.S.C. 371" filed by facsimile on 7 March 2003, which is being treated as a petition under 37 CFR 1.182 requesting processing of the above-referenced application under 35 U.S.C. 371 rather than 35 U.S.C. 111(a).

BACKGROUND

On 18 October 2000, Applicant apparently filed international application designating the United States, PCT/EP00/10271, which claimed priority of an earlier application filed on 19 October 1999. A Demand for International Preliminary Examination was filed on 19 April 2001, prior to 19 May 2001, the end of the 19th month from the 19 October 1999 priority date. The period for entering the national stage is thus 30 months and expired as of midnight on 19 April 2002.

On 19 April 2002, Applicant filed, *inter alia*, the following:

(1) A "Utility Patent Application Transmittal (Only for new nonprovisional application under 37 CFR 1.53(b)" (Form PTO/SB/05 (03-01));

(2) A "Fee Transmittal for FY 2002" (Form PTO/SB/17 (11-01));

(3) A "Transmittal Letter to the United States Designated/Elected Office (DO/EO/US) Concerning a Filing under 35 U.S.C. 371"; and

(4) An unexecuted declaration.

Item (1) indicates that the transmittal is only for a new nonprovisional application filed under 37 CFR 1.53(b), i.e., 35 U.S.C. 111(a).

The fee transmittal (item (2)) instructs the USPTO to charge a "Utility Filing Fee" of $740 under "Fee Code 101" to a deposit account. Fee Code 101 corresponds to the basic filing fee for a national application filed under 35 U.S.C. 111(a).

The transmittal letter (item (3)), which is not the standard form PTO-1390, contains the inventor name, the international application number and filing date, the priority date, the title of invention, and a certificate of mailing; and is addressed to "Assistant Commissioner for Patents, **BOX: Patent Application**, Washington, DC 20231" rather than "Commissioner for Patents, **Box PCT, Attn: RO/US**, Washington, DC 20231." (emphasis added)

Accordingly, the application was processed as instructed, i.e., as a national application filed under 35 U.S.C. 111(a). The petition asserts that this application was filed under 35 U.S.C. 371 as a national stage application of the international application, and requests that it be treated and processed as such.

DISCUSSION

The U.S. statutes and regulations do not make specific provision for the instant requested action, and the Office does not grant a petition for conversion as a mere matter of course. The Office will only grant a petition to convert upon a showing by applicant of sufficient cause (e.g., loss of patent rights) where no other remedy is available.

As delineated above, Applicant's 19 April 2002 Form PTO/SB/05 (03-01) (item (1)) unequivocally requested treatment of the papers as being filed under 37 CFR 1.53(b), i.e., 35 U.S.C. 111(a), and the USPTO complied.

In the fee transmittal (item (2)), Applicant authorized the USPTO to charge the "utility filing fee" (37 CFR 1.16(a)) rather than the "basic national fee" (37 CFR 1.492(a)) to a deposit account. That the two amounts are equivalent is coincidental. The Office realizes that effective 7 November 2000, under 37 CFR 1.25(b), an authorization to charge fees under §1.16 in an international application will be treated as an authorization to charge fees under §1.492. MPEP 1893.01(c) (Rev. 1, Feb. 2003). However, that provision only applies to an international application **entering the national stage under 35 U.S.C. 371**, which is not what Applicant's Form PTO/SB/05 (03-01) (item (1)) instructed.

The transmittal letter (item (3)) evidently is not addressed to the PCT.

As to item (4), the declaration identifies the specification to which it is directed by referring to the number and filing date of the international application, and stating that Applicant is executing the declaration as, and seeking a United States patent as, the inventor of the invention

described in that international application. While such a declaration may be an indicator that the application is being filed under 35 U.S.C. 371, the application may nonetheless be accepted as filed under 35 U.S.C. 111(a) if conflicting instructions are presented, which is the case here. MPEP 1893.03(a) (Rev. 1, Feb. 2003).

In summary, the papers filed on 19 April 2002 did not clearly and unambiguously indicate that the application was to be treated as one filed under 35 U.S.C. 371. The processing of the papers as an application filed under 35 U.S.C. 111(a) was proper. Applicant has not provided any showing of sufficient cause to justify converting this application to a national stage application under 35 U.S.C. 371.

CONCLUSION

In view of the above, the petition is **DISMISSED without prejudice.**

The instant application and the international application designating the United States were co-pending on 19 April 2002. 35 U.S.C. 120. In addition, the international application was filed within 12 months of the filing date of the 19 October 1999 German application. 35 U.S.C. 119. Consequently, the instant application may claim the benefit of the earliest-filed application disclosing this invention, i.e., the German application filed on 19 October 1999, provided that the pertinent conditions are met. 35 U.S.C. 119, 120, 365(c); 37 CFR 1.78(a)(2); MPEP 1895.01 (II) (Rev.1, Feb. 2003).

Richard Cole
PCT Legal Examiner
PCT Legal Office

RC Tang
Petitions Attorney
PCT Legal Office
Telephone: 703-308-1315
Facsimile: 703-308-6459

UNITED STATES PATENT AND TRADEMARK OFFICE

Commissioner for Patents
United States Patent and Trademark Office
P.O. Box 1450
Alexandria, VA 22313-1450
www.uspto.gov

GARDNER GROFF, P.C.
2018 POWERS FERRY ROAD
SUITE 800
ATLANTA, GA 30339

COPY MAILED

MAY 19 2005

OFFICE OF PETITIONS

In re Application of
Franz Schwab
Application No. 10/126,866
Filed: April 19, 2002
Attorney Docket No. 241907-1060

: DECISION ON PETITION
: UNDER 37 CFR 1.78(a)(3)

This is a decision on the petition under 37 CFR 1.78, filed November 12, 2004, which is being treated under 37 CFR 1.78(a)(3), to accept an unintentionally delayed claim under 35 U.S.C. §§ 120 and 365(c) for the benefit of priority to prior-filed PCT Application No. PCT/EP00/10271, filed October 18, 2000, set forth in the amendment submitted concurrently with the instant petition.

The petition is **GRANTED**.

A petition for acceptance of a claim for late priority under 37 CFR 1.78(a)(3) is only applicable to those applications filed on or after November 29, 2000. Further, the petition is appropriate only after the expiration of the period specified in 37 CFR 1.78(a)(2)(ii). In addition, the petition under 37 CFR 1.78(a)(3) must be accompanied by:

(1) the reference required by 35 U.S.C. § 120 and 37 CFR 1.78(a)(2)(i) of the prior-filed application, unless previously submitted;
(2) the surcharge set forth in § 1.17(t); and
(3) a statement that the entire delay between the date the claim was due under 37 CFR 1.78(a)(2)(ii) and the date the claim was filed was unintentional. The Commissioner may require additional information where there is a question whether the delay was unintentional.

The instant nonprovisional application was filed after November 29, 2000, and the claim herein for the benefit of priority to the above-noted, prior-filed PCT application is submitted after expiration of the period specified in 37 CFR 1.78(a)(2)(ii). Therefore, this is a proper petition under 37 CFR 1.78(a)(3).

The petition complies with the requirements for a grantable petition under 37 CFR 1.78(a)(3) in that (1) a reference to the above-noted, prior-filed PCT application has been included in an

amendment to the first sentence of the specification following the title, as provided by 37 CFR 1.78(a)(2)(iii); (2) the surcharge fee required by 37 CFR 1.17(t) has been submitted; and (3) the petition contains a proper statement of unintentional delay. Accordingly, having found that the instant petition for acceptance of an unintentionally delayed claim for the benefit of priority under 35 U.S.C. §§ 120 and 365(c) to the above-noted, prior-filed PCT application satisfies the conditions of 37 CFR 1.78(a)(3), the petition is granted.

The granting of the petition to accept the delayed benefit claim to the prior-filed application under 37 CFR 1.78(a)(3) should not be construed as meaning that the instant application is entitled to the benefit of the prior-filed application. In order for the instant application to be entitled to the benefit of the prior-filed application, all other requirements under 35 U.S.C. §§ 120 and 365(c) and 37 CFR 1.78(a)(1) and (a)(2) must be met. Similarly, the fact that the corrected Filing Receipt accompanying this decision on petition includes the prior-filed application should not be construed as meaning that applicant is entitled to the claim for benefit of priority to the prior-filed application noted thereon. Accordingly, the examiner will, in due course, consider this benefit claim and determine whether the instant application is entitled to the benefit of the earlier filing date.

A corrected Filing Receipt, which includes the priority claim to the prior-filed PCT application, accompanies this decision on petition.

Any inquiries concerning this decision may be directed to Wan Laymon at (571) 272-3220. All other inquiries concerning either the examination procedures or status of the application should be directed to the Technology Center.

This application is being forwarded to the examiner of Technology Center Art Unit 3651 for appropriate action on the amendment filed November 12, 2004, including consideration of applicant's entitlement to claim benefit of priority under 35 U.S.C. §§ 120 and 365(c) to the above-noted, prior-filed PCT application.

Frances Hicks

Frances Hicks
Lead Petitions Examiner
Office of Petitions
Office of the Deputy Commissioner
for Patent Examination Policy

ATTACHMENT: Corrected Filing Receipt

OIPE
AUG 1 1 2005
PATENT & TRADEMARK OFFICE

UNITED STATES PATENT AND TRADEMARK OFFICE

Commissioner for Patents
United States Patent and Trademark Office
P.O. Box 1450
Alexandria, VA 22313-1450
www.uspto.gov

GARDNER GROFF, P.C.
2018 POWERS FERRY ROAD
SUITE 800
ATLANTA, GA 30339

COPY MAILED

MAY 19 2005

OFFICE OF PETITIONS

In re Application of	:
Franz Schwab	:
Application No. 10/126,866	: DECISION ON PETITION
Filed: April 19, 2002	: UNDER 37 CFR 1.78(a)(3)
Attorney Docket No. 241907-1060	:

This is a decision on the petition under 37 CFR 1.78, filed November 12, 2004, which is being treated under 37 CFR 1.78(a)(3), to accept an unintentionally delayed claim under 35 U.S.C. §§ 120 and 365(c) for the benefit of priority to prior-filed PCT Application No. PCT/EP00/10271, filed October 18, 2000, set forth in the amendment submitted concurrently with the instant petition.

The petition is **GRANTED**.

A petition for acceptance of a claim for late priority under 37 CFR 1.78(a)(3) is only applicable to those applications filed on or after November 29, 2000. Further, the petition is appropriate only after the expiration of the period specified in 37 CFR 1.78(a)(2)(ii). In addition, the petition under 37 CFR 1.78(a)(3) must be accompanied by:

(1) the reference required by 35 U.S.C. § 120 and 37 CFR 1.78(a)(2)(i) of the prior-filed application, unless previously submitted;
(2) the surcharge set forth in § 1.17(t); and
(3) a statement that the entire delay between the date the claim was due under 37 CFR 1.78(a)(2)(ii) and the date the claim was filed was unintentional. The Commissioner may require additional information where there is a question whether the delay was unintentional.

The instant nonprovisional application was filed after November 29, 2000, and the claim herein for the benefit of priority to the above-noted, prior-filed PCT application is submitted after expiration of the period specified in 37 CFR 1.78(a)(2)(ii). Therefore, this is a proper petition under 37 CFR 1.78(a)(3).

The petition complies with the requirements for a grantable petition under 37 CFR 1.78(a)(3) in that (1) a reference to the above-noted, prior-filed PCT application has been included in an

amendment to the first sentence of the specification following the title, as provided by 37 CFR 1.78(a)(2)(iii); (2) the surcharge fee required by 37 CFR 1.17(t) has been submitted; and (3) the petition contains a proper statement of unintentional delay. Accordingly, having found that the instant petition for acceptance of an unintentionally delayed claim for the benefit of priority under 35 U.S.C. §§ 120 and 365(c) to the above-noted, prior-filed PCT application satisfies the conditions of 37 CFR 1.78(a)(3), the petition is granted.

The granting of the petition to accept the delayed benefit claim to the prior-filed application under 37 CFR 1.78(a)(3) should not be construed as meaning that the instant application is entitled to the benefit of the prior-filed application. In order for the instant application to be entitled to the benefit of the prior-filed application, all other requirements under 35 U.S.C. §§ 120 and 365(c) and 37 CFR 1.78(a)(1) and (a)(2) must be met. Similarly, the fact that the corrected Filing Receipt accompanying this decision on petition includes the prior-filed application should not be construed as meaning that applicant is entitled to the claim for benefit of priority to the prior-filed application noted thereon. Accordingly, the examiner will, in due course, consider this benefit claim and determine whether the instant application is entitled to the benefit of the earlier filing date.

A corrected Filing Receipt, which includes the priority claim to the prior-filed PCT application, accompanies this decision on petition.

Any inquiries concerning this decision may be directed to Wan Laymon at (571) 272-3220. All other inquiries concerning either the examination procedures or status of the application should be directed to the Technology Center.

This application is being forwarded to the examiner of Technology Center Art Unit 3651 for appropriate action on the amendment filed November 12, 2004, including consideration of applicant's entitlement to claim benefit of priority under 35 U.S.C. §§ 120 and 365(c) to the above-noted, prior-filed PCT application.

Frances Hicks

Frances Hicks
Lead Petitions Examiner
Office of Petitions
Office of the Deputy Commissioner
for Patent Examination Policy

ATTACHMENT: Corrected Filing Receipt

UNITED STATES PATENT AND TRADEMARK OFFICE

COMMISSIONER FOR PATENTS
UNITED STATES PATENT AND TRADEMARK OFFICE
P.O. BOX 1450
ALEXANDRIA, VA 22313-1450
www.uspto.gov

1-31-06

In re Patent No.6,764,723
Issue Date: July 20, 2004
Appl No.: 10/126,878
Filed: April 22, 2002
For: LIQUID-CRYSTALLINE MEDIUM

DECISION GRANTING PETITION
37 CFR 1.324

This is a decision on the petition filed April 13, 2005 to correct inventorship under 37 CFR 1.324.

Petitioner requests that the inventorship be amended to add Melanie KLASEN-MEMMER and Clarissa WELLER. In compliance with 37 CFR 1.324 petitioner has filed the appropriate statement by the currently named inventors, the appropriate statement by the omitted inventors and the consent of assignee. Additionally, the appropriate petition fee under 37 CFR 1.20(b) had been paid.

The petition is granted.

The patented file is being forwarded to Certificate of Corrections Branch for issuance of a certificate naming the actual inventors.

Mark F. Huff
Supervisory Patent Examiner
Art Unit 1756
Technology Center 1700

Computer Patent Annuities Inc.
901 N. Washington Street
Suite 305
Alexandria, VA 22314

UNITED STATES PATENT AND TRADEMARK OFFICE

COMMISSIONER FOR PATENTS
UNITED STATES PATENT AND TRADEMARK OFFICE
WASHINGTON, D.C. 20231
www.uspto.gov

Paper No. 6

MEDTRONIC, INC.
710 MEDTRONIC PARKWAY NE
MS-LC340
MINNEAPOLIS MN 55432-5604

COPY MAILED

FEB 0 4 2003

OFFICE OF PETITIONS

In re Application of
Corbucci, et al.
Application No. 10/126,896
Filed: April 22, 2002
Attorney Docket No. P-8169

DECISION ON PETITION

This is a decision on the petition under 37 CFR § 1.137(b), filed January 20, 2003, to revive the above-identified application.

The petition is **granted**.

This application became abandoned for failure to respond in an appropriate and timely manner to the "Notice to File Missing Parts in a Nonprovisional Application" (the "Notice") mailed May 23, 2002. The Notice set forth a two month period for reply beginning from its mailing date. No response was received within the allowable period. Accordingly, this application became abandoned on July 24, 2002. The instant petition was filed before a Notice of Abandonment could be sent.

The executed declaration and the substitute drawings filed January 20, 2003, are noted and made of record.

Deposit account 13-2546 will be assessed $1,300.00 for the petition fee and $130.00 for the surcharge for the late filing of a proper declaration.

The application is being forward to the Office of Initial Patent Examination for further processing.

Telephone inquiries concerning this matter may be directed to Kenya A. McLaughlin, Petitions Attorney, at (703) 305-0010.

Kenya A. McLaughlin

Kenya A. McLaughlin
Petitions Attorney
Office of Petitions

UNITED STATES PATENT AND TRADEMARK OFFICE

Commissioner for Patents
United States Patent and Trademark Office
P.O. Box 1450
Alexandria, VA 22313-1450
www.uspto.gov

Paper 8

THE PROCTER & GAMBLE COMPANY
INTELLECTUAL PROPERTY DIVISION
WINTON HILL TECHNICAL CENTER - BOX 161
6110 CENTER HILL AVENUE
CINCINNATI OH 45224

COPY MAILED

JAN 1 3 2005

OFFICE OF PETITIONS

ON PETITION

In re Application of :
Arthur Wong et al. :
Application No. 10/126,900 :
Filed: April 19, 2002 :
Attorney Docket Number: 8905 :

This is a decision on the petition under 37 CFR 1.137(b),[1] filed December 7, 2004, to revive the above-identified application.

The petition is **GRANTED**.

This application became abandoned July 31, 2002, for failure to timely reply to the Notice to File Missing Parts mailed on May 30, 2002, which set a two (2) month shortened period for reply. No extensions of the time for reply in accordance with 37 CFR 1.136(a) were obtained prior to the abandonment. Accordingly, a Notice of Abandonment was mailed December 19, 2003.

Receipt of the oath or declaration and replacement drawings in compliance with 37 CFR 1.84 and 37 CFR 1.121 is acknowledged. Fees in the amount of $1,370.00 for the petition and $130.00 for the late filing surcharge have been charged to deposit account no. 16-2480, as authorized.

The application is being forwarded to the Office of Initial Patent Examination for further pre-examination processing.

Telephone inquiries concerning this matter should be directed to the undersigned Petitions Attorney at (571) 272-3212.

Patricia Faison-Ball
Senior Petitions Attorney
Office of Petitions

---

[1]Effective December 1, 1997, the provisions of 37 CFR 1.137(b) now provide that where the delay in reply was unintentional, a petition may be filed to revive an abandoned application or a lapsed patent pursuant to 37 CFR 1.137(b). A grantable petition filed under the provisions of 37 CFR 1.137(b) must be accompanied by:

(1) the required reply, unless previously filed. In a nonprovisional application abandoned for failure to prosecute, the required reply may be met by the filing of a continuing application. In a nonprovisional application filed on or after June 8, 1995, and abandoned for failure to prosecute, the required reply may also be met by the filing of a request for continued examination in compliance with § 1.114. In an application or patent, abandoned or lapsed for failure to pay the issue fee or any portion thereof, the required reply must be the payment of the issue fee or any outstanding balance thereof. In an application abandoned for failure to pay the publication fee, the required reply must include payment of the publication fee.

(2) the petition fee as set forth in 37 CFR 1.17(m);

(3) a statement that the entire delay in filing the required reply from the due date for the reply until the filing of a grantable petition pursuant to 37 CFR 1.137(b) was unintentional. The Commissioner may required additional information where there is a question whether the delay was unintentional; and

(4) any terminal disclaimer (and fee as set forth in 37 CFR 1.20(d)) required pursuant to 37 CFR 1.137(c)).

UNITED STATES PATENT AND TRADEMARK OFFICE

Commissioner for Patents
United States Patent and Trademark Office
P.O. Box 1450
Alexandria, VA 22313-1450
www.uspto.gov

MICHAEL J. CHERSKOV
CHERSKOV & FLAYNIK
SUITE 1447
20 N. WACKER DRIVE
CHICAGO, IL 60606

COPY MAILED

APR 2 5 2005

OFFICE OF PETITIONS

In re Application of	:	
Mabrouk et al.	:	
Application No. 10/126,915	:	ON PETITION
Filed: April 19, 2002	:	
Attorney Docket No. 0078/00480 CIP	:	

This is a decision on the petition under 37 C.F.R. § 1.137(b), filed October 26, 2004, to revive the above-identified application.

The petition is **GRANTED.**

The above-identified application became abandoned for failure to reply in a timely manner to the Notice to Comply with Requirements for Patent Applications Containing Nucleotide Sequence and/or Amino Acid Sequence Disclosures (Notice) mailed October 9, 2002. The Notice set a period for reply of two (2) months from the mail date of the Notice. No extensions of time under the provisions of 37 CFR 1.136(a) were obtained. Accordingly, the above-identified application became abandoned on December 10, 2002. A Notice of Abandonment was mailed on June 14, 2004.

Petitioner has met the requirements to revive the above-identified application pursuant to 37 CFR 1.137(b).

This matter is being referred to the Office of Initial Patent Examination for further processing.

Telephone inquiries regarding this decision should be directed to the undersigned at (571) 272-3282.

Liana Chase

Liana Chase
Petitions Examiner
Office of Petitions
Office of the Deputy Commissioner
for Patent Examination Policy

UNITED STATES PATENT AND TRADEMARK OFFICE

Commissioner for Patents
United States Patent and Trademark Office
P.O. Box 1450
Alexandria, VA 22313-1450
www.uspto.gov

CRAIG A. SUMMERFIELD
BRINKS HOFER GILSON & LIONE
P.O. BOX 10395
CHICAGO, IL 60610

COPY MAILED
MAY 12 2006
OFFICE OF PETITIONS

In re Application of Gilles et al. :
Application No. 10/126,923 : Letter Regarding PTA
Filing Date: April 18, 2002 :
Attorney Docket No. 8285/501 :

This letter is in response to the "Notice Regarding Patent Term Extension," filed November 26, 2004. Applicants request that the initial determination of patent term adjustment under 35 U.S.C. 154(b) be reviewed for accuracy.

The request for correction of the patent term adjustment (PTA) is **DISMISSED**.

35 U.S.C. 154(b)(2)(B) provides that:

> No patent the term of which has been disclaimed beyond a specified date may be adjusted under this section beyond the expiration date specified in the disclaimer.

37 CFR § 1.703(g) provides that:

> No patent, the term of which has been disclaimed beyond a specified date, shall be adjusted under § 1.702 and this section beyond the expiration date specified in the disclaimer.

The provisions of § 154(b), for adjustment due to examination delay, apply to original applications[1], other than designs, filed on or after May 29, 2000. The Office calculates patent term adjustment for examination delay in all eligible applications. In calculating the patent term adjustment, the Office does not differentiate between applications that have terminal disclaimers and those that do not. Nor does the Office undertake the burdensome task of reviewing every application with a terminal disclaimer to determine if the patent term adjustment accorded would adjust the term beyond the expiration date specified in the disclaimer.

Rather, on issuance of the application, in compliance with 35 U.S.C. 154(b) and 37 CFR § 1.703(g), it is indicated in the patent that the patent term adjustment indicated therein is subject to any disclaimer. Moreover, it is also stated therein that the patent is subject to a terminal disclaimer.

[1] Since a continued prosecution application (CPA) under § 1.53(d) is a new application, the filing of a CPA application on or after May 29, 2000, in an application filed before May 29, 2000 causes the application (CPA) to be eligible for patent term adjustment.

As this letter was submitted as an attempt to advise the Office of an error in Patentees' favor, the Office will not assess the $200.00 application fee under 37 CFR 1.705(b). The Office thanks applicants for their good faith and candor in bringing this to the attention of the Office.

The application file is being forwarded to the Office of Patent Publication for issuance of the patent. The patent term adjustment shown on the patent (and in the Issue Notification mailed approximately three weeks prior to issuance) will include any additional patent term accrued pursuant to §§ 1.702(a)(4) and 1.703(b).

Telephone inquiries regarding this communication should be directed to Petitions Attorney Steven Brantley at (571) 272-3203.

Nancy Johnson
Senior Petitions Attorney
Office of Petitions

UNITED STATES DEPARTMENT OF COMMERCE
Patent and Trademark Office
ASSISTANT SECRETARY OF COMMERCE AND
COMMISSIONER OF PATENTS AND TRADEMARKS
Washington, DC 20231

10/7/09

Patent No. :7045337
Inventor(s) :Peter Schultz, et al.
Issued : 5/16/2006
Title : IN VIVO INCORPORATION OF UNNATURAL AMINO ACIDS
Atty.doc./File No.

Request for Certificates of Correction

Consideration has been given to your request for the issuance of a Certificate of Correction, for the above – identified patent under the provisions of CFR 1.322.

Inspection of the application for the patent reveals col.1 line 18 is printed in accordance with the record please show evidence of supporting data or amendment. Therefore being no fault on the Patent and Trademark Office, It has no authority to issue a certificate of correction under the provision of 1.322.

In view of the forgoing, your request in this matter, is hereby denied.

Future written correspondence concerning this matter should be filed and directed to Decisions & Certificates of Correction Branch.

Henry Randall
Decisions & Certificates
of Correction Branch
(703) 756-1571

QUINE Intellectual Property Law Group P.C.
P.O. BOX 458
Alamenda, CA 94501

HR

SPE RESPONSE FOR CERTIFICATE OF CORRECTION

Paper No.: _____

DATE : 12/17/09

TO SPE OF : ART UNIT 1656 Wang Andrew (Spe)

SUBJECT : Request for Certificate of Correction for Appl. No.: 10/126927 Patent No.: 7045337

Please respond to this request for a certificate of correction within 7 days.

FOR IFW FILES:

Please review the requested changes/corrections as shown in the **COCIN** document(s) in the IFW application image. No new matter should be introduced, nor should the scope or meaning of the claims be changed.

Please complete the response (see below) and forward the completed response to scanning using document code **COCX**.

FOR PAPER FILES:

Please review the requested changes/corrections as shown in the attached certificate of correction. Please complete this form (see below) and forward it with the file to:

Certificates of Correction Branch (CofC)
Randolph Square – 9D10-A
Palm Location 7580

Certificates of Correction Branch
703-756-1571 _____

Thank You For Your Assistance

The request for issuing the above-identified correction(s) is hereby:
Note your decision on the appropriate box.

- ☑ **Approved** — **All** changes apply.
- ☐ **Approved in Part** — Specify below which changes **do not** apply.
- ☐ **Denied** — State the reasons for denial below.

Comments: _____

SPE

1656
Art Unit

UNITED STATES PATENT AND TRADEMARK OFFICE

Commissioner for Patents
United States Patent and Trademark Office
P.O. Box 1450
Alexandria, VA 22313-1450
www.uspto.gov

COPY MAILED

AUG 0 2 2007

OFFICE OF PETITIONS

PILLSBURY WINTHROP SHAW PITTMAN, LLP
P.O. BOX 10500
MCLEAN, VA 22102

In re Application of	:	
Juha Karjanlahti	:	
Application No. 10/126,952	:	DECISION ON PETITION
Filed: April 22, 2002	:	UNDER 37 CFR 1.78(a)(3)
Attorney Docket No. P 290621	:	
2990844US/SML/HE		

This is a decision on the petition filed June 18, 2007, which is being treated as a petition under 37 CFR 1.78(a)(3), to accept an unintentionally delayed claim under 35 U.S.C. §§ 120 and 365(c) for the benefit of priority to prior-filed international Application No. PCT/FI00/00911, filed October 19, 2000, as set forth in the accompanying amendment.

The petition is **GRANTED.**

A petition for acceptance of a claim for late priority under 37 CFR 1.78(a)(3) is only applicable to those applications filed on or after November 29, 2000. Further, the petition is appropriate only after the expiration of the period specified in 37 CFR 1.78(a)(2)(ii). In addition, the petition under 37 CFR 1.78(a)(3) must be accompanied by:

(1) the reference required by 35 U.S.C. § 120 and 37 CFR 1.78(a)(2)(i) of the prior-filed application, unless previously submitted;

(2) the surcharge set forth in § 1.17(t); and

(3) a statement that the entire delay between the date the claim was due under 37 CFR 1.78(a)(2)(ii) and the date the claim was filed was unintentional. The Director may require additional information where there is a question whether the delay was unintentional.

All of the above requirements having been satisfied, the late claim for priority under 35 U.S.C. §§ 120 and 365(c) is accepted as being unintentionally delayed.

The granting of the petition to accept the delayed benefit claim to the prior-filed application under 37 CFR 1.78(a)(3) should not be construed as meaning that the application is entitled to the benefit of the prior-filed application. In order for the application to be entitled to the benefit of the prior-filed application, all other requirements under 35 U.S.C. §§ 120 and 365(c) and 37 CFR 1.78(a)(1) and (a)(2) must be met. Similarly, the fact that the corrected Filing Receipt accompanying this decision on petition includes the prior-filed application should not be construed as meaning that applicant is entitled to the claim for benefit of priority to the prior-filed application noted thereon. Accordingly, the examiner will, in due course, consider this benefit claim and determine whether the application is entitled to the benefit of the earlier filing date.

A corrected Filing Receipt, which includes the priority claim to the prior-filed application, accompanies this decision on petition.

Any inquiries concerning this decision may be directed to Irvin Dingle at (571) 272-3210. All other inquiries concerning either the examination procedures or status of the application should be directed to the Technology Center.

This application is being forwarded to the examiner of Technology Center Art Unit 2142 for consideration of applicant's entitlement to claim benefit of priority under 35 U.S.C. §§ 120 and 365(c) to the above-noted, prior-filed PCT application.

Frances Hicks
Petition Examiner
Office of Petitions

ATTACHMENT: Corrected Filing Receipt

UNITED STATES PATENT AND TRADEMARK OFFICE

UNITED STATES DEPARTMENT OF COMMERCE
United States Patent and Trademark Office
Address: COMMISSIONER FOR PATENTS
P.O. Box 1450
Alexandria, Virginia 22313-1450
www.uspto.gov

APPL NO.	FILING OR 371(c) DATE	ART UNIT	FIL FEE REC'D	ATTY.DOCKET NO	TOT CLMS	IND CLMS
10/126,952	04/22/2002	2142	870	P 290621 2990844US/SML/HE	13	2

CONFIRMATION NO. 4011

CORRECTED FILING RECEIPT

OC000000025145826

909
PILLSBURY WINTHROP SHAW PITTMAN, LLP
P.O. BOX 10500
MCLEAN, VA 22102

Date Mailed: 08/02/2007

Receipt is acknowledged of this nonprovisional patent application. The application will be taken up for examination in due course. Applicant will be notified as to the results of the examination. Any correspondence concerning the application must include the following identification information: the U.S. APPLICATION NUMBER, FILING DATE, NAME OF APPLICANT, and TITLE OF INVENTION. Fees transmitted by check or draft are subject to collection. Please verify the accuracy of the data presented on this receipt. **If an error is noted on this Filing Receipt, please write to the Office of Initial Patent Examination's Filing Receipt Corrections. Please provide a copy of this Filing Receipt with the changes noted thereon. If you received a "Notice to File Missing Parts" for this application, please submit any corrections to this Filing Receipt with your reply to the Notice. When the USPTO processes the reply to the Notice, the USPTO will generate another Filing Receipt incorporating the requested corrections (if appropriate).**

Applicant(s)

Juha Karjanlahti, Espoo, FINLAND;

Power of Attorney:

Christine McCarthy--41844

Domestic Priority data as claimed by applicant

This application is a CON of PCT/FI00/00911 10/19/2000

Foreign Applications

FINLAND 199992299 10/22/1999

If Required, Foreign Filing License Granted: 05/29/2002

The country code and number of your priority application, to be used for filing abroad under the Paris Convention, is US10/126,952

Projected Publication Date: Not Applicable

Non-Publication Request: No

Early Publication Request: No

Title

METHOD FOR ACTIVATING PACKET DATA PROTOCOL CONTEXT FOR ROAMING SUBSCRIBER, NETWORK EQUIPMENT AND TELECOMMUNICATION SYSTEM FOR UTILIZING SAME

Preliminary Class

709

PROTECTING YOUR INVENTION OUTSIDE THE UNITED STATES

Since the rights granted by a U.S. patent extend only throughout the territory of the United States and have no effect in a foreign country, an inventor who wishes patent protection in another country must apply for a patent in a specific country or in regional patent offices. Applicants may wish to consider the filing of an international application under the Patent Cooperation Treaty (PCT). An international (PCT) application generally has the same effect as a regular national patent application in each PCT-member country. The PCT process **simplifies** the filing of patent applications on the same invention in member countries, but **does not result** in a grant of "an international patent" and does not eliminate the need of applicants to file additional documents and fees in countries where patent protection is desired.

Almost every country has its own patent law, and a person desiring a patent in a particular country must make an application for patent in that country in accordance with its particular laws. Since the laws of many countries differ in various respects from the patent law of the United States, applicants are advised to seek guidance from specific foreign countries to ensure that patent rights are not lost prematurely.

Applicants also are advised that in the case of inventions made in the United States, the Director of the USPTO must issue a license before applicants can apply for a patent in a foreign country. The filing of a U.S. patent application serves as a request for a foreign filing license. The application's filing receipt contains further information and guidance as to the status of applicant's license for foreign filing.

Applicants may wish to consult the USPTO booklet, "General Information Concerning Patents" (specifically, the section entitled "Treaties and Foreign Patents") for more information on timeframes and deadlines for filing foreign patent applications. The guide is available either by contacting the USPTO Contact Center at 800-786-9199, or it can be viewed on the USPTO website at http://www.uspto.gov/web/offices/pac/doc/general/index.html.

For information on preventing theft of your intellectual property (patents, trademarks and copyrights), you may wish to consult the U.S. Government website, http://www.stopfakes.gov. Part of a Department of Commerce initiative, this website includes self-help "toolkits" giving innovators guidance on how to protect intellectual property in specific countries such as China, Korea and Mexico. For questions regarding patent enforcement issues, applicants may call the U.S. Government hotline at 1-866-999-HALT (1-866-999-4158).

LICENSE FOR FOREIGN FILING UNDER
Title 35, United States Code, Section 184
Title 37, Code of Federal Regulations, 5.11 & 5.15

GRANTED

The applicant has been granted a license under 35 U.S.C. 184, if the phrase "IF REQUIRED, FOREIGN FILING LICENSE GRANTED" followed by a date appears on this form. Such licenses are issued in all applications where the conditions for issuance of a license have been met, regardless of whether or not a license may be required as set forth in 37 CFR 5.15. The scope and limitations of this license are set forth in 37 CFR 5.15(a) unless an earlier license has been issued under 37 CFR 5.15(b). The license is subject to revocation upon written notification. The date indicated is the effective date of the license, unless an earlier license of similar scope has been granted

under 37 CFR 5.13 or 5.14.

This license is to be retained by the licensee and may be used at any time on or after the effective date thereof unless it is revoked. This license is automatically transferred to any related applications(s) filed under 37 CFR 1.53(d). This license is not retroactive.

The grant of a license does not in any way lessen the responsibility of a licensee for the security of the subject matter as imposed by any Government contract or the provisions of existing laws relating to espionage and the national security or the export of technical data. Licensees should apprise themselves of current regulations especially with respect to certain countries, of other agencies, particularly the Office of Defense Trade Controls, Department of State (with respect to Arms, Munitions and Implements of War (22 CFR 121-128)); the Bureau of Industry and Security, Department of Commerce (15 CFR parts 730-774); the Office of Foreign Assets Control, Department of Treasury (31 CFR Parts 500+) and the Department of Energy.

NOT GRANTED

No license under 35 U.S.C. 184 has been granted at this time, if the phrase "IF REQUIRED, FOREIGN FILING LICENSE GRANTED" DOES NOT appear on this form. Applicant may still petition for a license under 37 CFR 5.12, if a license is desired before the expiration of 6 months from the filing date of the application. If 6 months has lapsed from the filing date of this application and the licensee has not received any indication of a secrecy order under 35 U.S.C. 181, the licensee may foreign file the application pursuant to 37 CFR 5.15(b).

UNITED STATES PATENT AND TRADEMARK OFFICE

DEC 02 2004

COMMISSIONER FOR PATENTS
UNITED STATES PATENT AND TRADEMARK OFFICE
P.O. BOX 1450
ALEXANDRIA, VA 22313-1450
www.uspto.gov

Paper No. 9

James C. Wray
1493 Chain Bridge Road
Suite 300
McLean, VA 22101

In re Application of Johny Debaes et al Serial No. : 10/126,957 Filed : April 22, 2002 For : Weft Yarn Clamp for Clamping and Releasing Weft Yarns of a Weaving Machine	: DECISION ON PETITION : TO WITHDRAW : HOLDING OF : ABANDONMENT

This is a decision on petitioner's request filed August 16, 2004, to review the holding of abandonment mailed August 13, 2004, for failure to respond to the Office action mailed January 29, 2004. There is no fee required for this petition.

In support of the request, petitioner has submitted a copy of a response and a copy of a PTO stamped receipt dated March 17, 2004 as evidence of the timely filing of a response.

In view of the above, the Notice of Abandonment mailed August 13, 2004 is in error and is hereby vacated. The holding of abandonment is withdrawn. Upon the mailing of this decision, the application will be forwarded to the Examiner via the Legal Instruments Examiner for entry and consideration of the response filed March 17, 2004.

Summary: Holding of Abandonment Withdrawn.

John E. Kittle, Director
Groups 3730 and 3760
Phone: (571) 272-2975

ak/11/24/04

UNITED STATES PATENT AND TRADEMARK OFFICE

Commissioner for Patents
United States Patent and Trademark Office
P.O. Box 1450
Alexandria, VA 22313-1450
www.uspto.gov

NIXON PEABODY, LLP
401 9TH STREET, NW
SUITE 900
WASHINGTON, DC 20004-2128

COPY MAILED
JUN 2 3 2004
OFFICE OF PETITIONS

In re Application of :
Kesatoshi Takeuchi, et al. :
Application No. 10/126,960 :
Filed: April 22, 2002 :
Attorney Docket No. 740169-42 :

ON PETITION

This is a decision on the petition, filed June 16, 2004, under 37 CFR 1.313(c)(2) to withdraw the above-identified application from issue after payment of the issue fee.

The petition is **GRANTED**.

The above-identified application is withdrawn from issue for consideration of a submission under 37 CFR 1.114 (request for continued examination). See 37 CFR 1.313(c)(2).

Petitioner is advised that the issue fee paid on April 28, 2004, in the above-identified application cannot be refunded. If, however, the above-identified application is again allowed, petitioner may request that it be applied towards the issue fee required by the new Notice of Allowance. [1]

Telephone inquiries relating to this decision should be directed to the undersigned at (703) 305-9220.

The application is being referred to Technology Center AU 2837 for further processing of the request for continued examination under 37 CFR 1.114.

Sherry D. Brinkley
Petitions Examiner
Office of Petitions
Office of the Deputy Commissioner
for Patent Examination Policy

[1] The request to apply the issue fee to the new Notice may be satisfied by completing and returning the new Issue Fee Transmittal Form PTOL-85(b), which includes the following language thereon: "Commissioner for Patents is requested to apply the Issue Fee and Publication Fee (if any) or re-apply any previously paid issue fee to the application identified above." Petitioner is advised that, whether a fee is indicated as being due or not, the Issue Fee Transmittal Form **must** be completed and timely submitted to avoid abandonment. Note the language in bold text on the first page of the Notice of Allowance and Fee(s) Due (PTOL-85).

United States Patent and Trademark Office

Commissioner for Patents
United States Patent and Trademark Office
P.O. Box 1450
Alexandria, VA 22313-1450
www.uspto.gov

MINTZ, LEVIN, COHN, FERRIS, GLOVSKY AND
POPEO, P.C.
666 Third Avenue
New York, NY 10017

COPY MAILED

JUN 16 2005

OFFICE OF PETITIONS

ON PETITION

In re Application of
POL-HENRI GUIVARC'H ET AL.
Application No.: 10/126,980
Filed: 22 April 2002
Attorney Docket No.: 28069-508 CON

This is a decision on the petition under 37 CFR 1.137(b), filed March 24, 2005 to revive the application identified above.

The petition is **GRANTED.**

The above-identified application became abandoned for failure to reply to the Restriction mailed 25 June 2004, which set a shortened statutory period for reply of one (1) month or thirty (30) days (whichever is later). No extensions of time under the provisions of 37 CFR 1.136(a) were obtained. Accordingly, the above identified application became abandoned after midnight 25 July 2004.

An extension of time under 37 CFR 1.136 must be filed prior to the expiration of the maximum extendable period for reply. See In re Application of S., 8 USPQ 2d 1630, 1631 (Comm'r Pats. 1988). Accordingly, the $2,160 extension of time submitted with the present petition was subsequent to the maximum extendable period for reply, this fee is unnecessary and will be credited to the petitioner's Deposit Account No. 50-0311.

The file does not indicate a change of address has been submitted, although the address given on the petition differs from the address of record. If appropriate, a change of address should be filed in accordance with MPEP 601.03. A courtesy copy of this decision is being mailed to the address given on the petition; however, the Office will mail all future correspondence solely to the address of record.

The application file is being referred to Technology Center Art Unit 1639, for further processing.

Telephone inquiries concerning this decision should be directed to Jeremy Fleming, at 571-272-3284.

Andrea Smith
Petitions Examiner
Office of Petitions
Office of the Deputy Commissioner
for Patent Examination Policy

Jeremy Fleming
Paralegal Specialist
Office of PCT Legal Administration

CC:
MINTZ, LEVIN, COHN, FERRIS, GLOVSKY AND
POPEO, P.C.
One Financial Center
Boston, MA 02111

UNITED STATES PATENT AND TRADEMARK OFFICE

Commissioner for Patents
United States Patent and Trademark Office
P.O. Box 1450
Alexandria, VA 22313-1450
www.uspto.gov

Paper No. 9

David H. Judson
Locke Liddell & Sapp
2200 Ross Avenue, Suite 2200
Dallas, TX 75201

COPY MAILED

FEB 11 2004

OFFICE OF PETITIONS

In re Application of :
Robert D. Blumofe :
Application No. 10/127,009 : ON PETITION
Filed: April 19, 2002 :
Attorney Docket No. 0314200011.88 :

This is a decision on the petition under 37 CFR 1.137(b), filed January 14, 2004, to revive the above-identified application.

The petition is granted.

The above-identified application became abandoned for failure to reply in a timely manner in reply to the Notice to File Corrected Application Papers mailed June 6, 2002, which set a shortened statutory period for reply of (2) two-months. No extension of time under the provisions of 37 CFR 1.136 have been obtained. Accordingly, the application became abandoned on September 7, 2002.

The application file is being forwarded to the Office of Initial Patent Examination Division for further processing.

Telephone inquiries concerning this decision should be directed to Latrice Bond at (703) 308-6911.

Latrice Bond

Latrice Bond
Paralegal Specialist
Office of Petitions
Office of the Deputy Commissioner
For Patent Examination Policy

UNITED STATES PATENT AND TRADEMARK OFFICE

COMMISSIONER FOR PATENTS
UNITED STATES PATENT AND TRADEMARK OFFICE
WASHINGTON, D.C. 20231
www.uspto.gov
DIW 10-02

Paper No. 6

HARNESS, DICKEY & PIERCE, P.L.C.
P.O. BOX 828
BLOOMFIELD HILLS MI 48303

COPY MAILED

OCT 23 2002

OFFICE OF PETITIONS

In re Application of	:
Whittle, Shepherd, Rich, Hawkins,	:
and Verhelle	: DECISION REFUSING STATUS
Application No. 10/127,014	: UNDER 37 CFR 1.47(a)
Filed: 19 April, 2002	:
Attorney Docket No. 3562-000027	:

This is in response to the petition filed under 37 CFR 1.47(a) on 19 August, 2002.

The petition is **DISMISSED**.

Rule 47 applicant is given TWO MONTHS from the mailing date of this decision to reply, correcting the below-noted deficiencies. Any reply should be entitled "Request for Reconsideration of Petition Under 37 CFR 1.47(a)," and should only address the deficiencies noted below, except that the reply may include an oath or declaration executed by the non-signing inventor. **FAILURE TO RESPOND WILL RESULT IN ABANDONMENT OF THE APPLICATION.** Extensions of time may be obtained in accordance with 37 CFR 1.136(a).

The above-identified application was filed on 19 April, 2002, without an executed oath or declaration. Accordingly, on 14 June, 2002, Initial Patent Examination Division mailed a "Notice to File Missing Parts of Nonprovisional Application" requiring the statutory basic filing fee, an executed oath or declaration, and a surcharge for their late filing.

In response, on 19 August, 2002 (certificate of mailing date 14 August, 2002), petitioners filed the statutory basic filing fee, the late-filing surcharge, the present petition and petition fee, accompanied by an executed declaration naming Bruce H. Whittle, Michael L. Shepherd, Louis J. Rich, Daniel E. Hawkins, and Ronald

J. Verhelle as joint inventors and signed by joint inventors Whittle and Verhelle on behalf of themselves and joint inventors Shepherd, Rich, and Hawkins.

Petitioners assert that they have been unable to reach the non-signing inventors.

A grantable petition under 37 CFR 1.47(a) requires:

(1) proof that the non-signing inventor cannot be reached or located, notwithstanding diligent effort, or refuses to sign the oath or declaration after having been presented with the application papers (specification, claims and drawings);

(2) an acceptable oath or declaration in compliance with 35 U.S.C. §§ 115 and 116;

(3) the petition fee;

(4) a surcharge of $130 or $65 (small entity) if the petition and/or declaration is not filed at the time of filing the application, and

(5) a statement of the last known address of the non-signing inventor.

The petition lacks items (1), (2), and (5).

In regards to item (1), above, petitioners have not provided sufficient proof that a copy of the application (specification, including claims, drawings, if any, and the declaration) was sent or given to each non-signing inventor for review.[1] Petitioners should provide a copy of the cover letter transmitting the application papers to the non-signing inventor or details in an affidavit or declaration of facts by a person having first-hand knowledge of the details.

If the inventor refuses in writing to sign, a copy of that written refusal should be provided with any renewed petition. If the inventor refuses orally, petitioners should submit details of the refusal in an affidavit or declaration of facts by a person having first-hand knowledge of the refusal.

In the event that the application papers are returned as undeliverable, petitioners may show diligent efforts to locate the non-signing inventor by providing a copy of an envelope showing that a letter sent to the last known address of the non-signing inventor was returned as undeliverable by the post office. Details of the efforts made to locate the non-signing

[1] MPEP 409.03(d).

inventor should be set forth in an affidavit or declaration of facts by a person having first-hand knowledge of the details. Additionally, if any inventor no longer lives at the last known address, petitioners may show diligent efforts by use of a national registry or other database to determine a current address for the non-signing inventor. If a more recent address is discovered, petitioners should send or give a copy of the application papers to the inventor at that address.

If repeated attempts to contact the non-signing inventor are unsuccessful, petitioners will have shown that despite diligent efforts, the inventor could not be reached.

In regards to item (2), above, the declaration filed with the petition does not meet the requirements of 37 CFR 1.63 because it does not list the citizenship, mailing address and residence of the non-signing inventors. A statement of the inventors' citizenship is a statutory requirement and cannot be waived.[2] Additionally, in situations where an inventor does not execute the oath or declaration and the inventor is not deceased, such as in an application filed under 37 CFR 1.47, the inventors' most recent home address must be given to enable the Office to communicate directly with the inventor as necessary.[3] The mailing address, residence address, if different than where the inventor customarily receives mail, and citizenship of the non-signing inventor must be provided on the oath or declaration. A new oath or declaration in compliance with 37 CFR 1.63 and 1.67, listing the residence, mailing address, and citizenship of all of the inventors and signed by the signing inventors on behalf of themselves and the non-signing inventors must be provided with any renewed petition.

In reference to item (5), above, the petition must include a proper statement of the last known address for each of the non-signing inventors. Ordinarily, the last known address will be the last known residence of the non-signing inventor, and should be the last known address at which the inventor customarily receives mail.[4] In situations where an inventor does not execute the oath or declaration and the inventor is not deceased, such as in an application filed under 37 CFR 1.47, the inventor's most recent

---

[2] 35 U.S.C. § 115, MPEP 605.01.

[3] See MPEP 605.03.

[4] Id.

home address must be given to enable the Office to communicate directly with the inventor as necessary.

Further correspondence with respect to this matter should be addressed as follows:

By mail: Assistant Commissioner for Patents
Box DAC
Washington, D.C. 20231

By FAX: (703) 308-6916
Attn: Office of Petitions

By hand: Crystal Plaza Four, Suite 3C23
2201 S. Clark Place
Arlington, VA

Telephone inquiries related to this decision should be directed to the undersigned at 703-308-6918.

Douglas I. Wood
Petitions Attorney
Office of Petitions
Office of the Deputy Commissioner
for Patent Examination Policy

UNITED STATES PATENT AND TRADEMARK OFFICE

COMMISSIONER FOR PATENTS
UNITED STATES PATENT AND TRADEMARK OFFICE
WASHINGTON, D.C. 20231
www.uspto.gov
DIW 01-03

Paper No. 9

HARNESS, DICKEY & PIERCE, P.L.C.
P.O. BOX 828
BLOOMFIELD HILLS MI 48303

COPY MAILED

JAN 0 9 2003

OFFICE OF PETITIONS

In re Application of	:
Whittle, Shepherd, Rich, Hawkins,	: DECISION NOTING JOINDER OF
and Verhelle	: INVENTOR AND PETITION UNDER
Application No. 10/127,014	: UNDER 37 CFR 1.47(a)
Filed: 19 April, 2002	:
Attorney Docket No. 3562-000027	:

Papers filed on 30 December, 2002 (certificate of mailing date 23 December, 2002), in response to the Decision Refusing Status Under 37 CFR 1.47(a) mailed on 23 October, 2002, included a Declaration signed by the previously non-signing inventors, Daniel E. Hawkins, Louis J. Rich, and Michael L. Shepherd, in compliance with 37 CFR 1.63.

In view of the joinder of the inventor, further consideration under 37 CFR 1.47(a) is moot; this application does not have any rule 1.47(a) status and no such status should appear on the file wrapper. This application need not be returned to this office for any further consideration under 37 CFR 1.47(a).

The petition fee submitted with the present renewed petition is unnecessary and will be credited to counsel's deposit account, No. 08-0750.

The application is being forwarded to the Office Initial Patent Examination for further processing.

Telephone inquiries related to this decision should be directed to the undersigned at 703-308-6918.

D Wood

Douglas I. Wood
Senior Petitions Attorney
Office of Petitions
Office of the Deputy Commissioner
for Patent Examination Policy

UNITED STATES PATENT AND TRADEMARK OFFICE

Commissioner for Patents
United States Patent and Trademark Office
P.O. Box 1450
Alexandria, VA 22313-1450
www.uspto.gov

MAIL

NOV 2 2005

DIRECTOR OFFICE
TECHNOLOGY CENTER 2600

HANSRA PATENT SERVICES
4525 GLEN MEADOWS PLACE
BELLINGHAM WA 98226

In re Application of
ZHANG, XIAO, et al.
Application No. 10/127,015
Filed: April 19, 2002
For: **COMPOUNDABLE ERROR CORRECTION IN SELF PROPAGATING OF SERVO WRITING USING BURST SIGNALS**

DECISION ON PETITION TO WITHDRAW HOLDING OF ABANDONMENT

This is in response to the Petition to Withdraw the Holding of Abandonment pursuant to 37 CFR §1.181 filed September 30, 2005. No fee is required.

The application is held as abandoned for failure to timely respond to the non-final Office action mailed September 15, 2004. A Notice of Abandonment was mailed June 27, 2005.

Petitioner states that they did not receive the non-final Office action mailed September 15, 2004.

A review of the file record reveals that the non-final Office action was returned to the Office as undeliverable on September 24, 2004. The correspondence address on the non-final Office action is different from that of record at the time of mailing. Thus, there was obviously an irregularity in mailing of the Office action.

Accordingly, the Notice of Abandonment is vacated and the holding of abandonment withdrawn.

The petition is **GRANTED**.

The application file is being forwarded to the group technical support staff for re-mailing of the non-final Office action originally mailed September 15, 2004. The time period for response will be reset to run from the re-mail date.

Kenneth A. Wieder
Special Program Examiner
Technology Center 2600
Communications

UNITED STATES PATENT AND TRADEMARK OFFICE

Commissioner for Patents
United States Patent and Trademark Office
Washington, D.C. 20231
www.uspto.gov

Paper No. 5

Medtronic Inc.
710 Medtronic Parkway (MS-LC340)
Minneapolis, MN 55432-5604

COPY MAILED

JAN 0 6 2003

OFFICE OF PETITIONS

In re Application of :
Struble et al. :
Application No. 10/127,034 :
Filed: April 22, 2002 :
Attorney Docket No. P-10029.00 :

ON PETITION

This is a decision on the petition under 37 CFR 1.137(b), filed December 23, 2002, to revive the above-identified application.

The petition is **GRANTED**.

The above-identified application became abandoned for failure to reply in a timely manner to the Notice to File Missing Parts of Application (Notice) mailed May 30, 2002. The Notice set a period for reply of two (2) months from the mail date of the Notice. No extensions of time under the provisions of 37 CFR 1.136(a) were obtained. Accordingly, the above-identified application became abandoned on July 31, 2002.

Telephone inquiries concerning this decision should be directed to Latrice Bond at (703) 308-6911.

The application file is being forwarded to the Office of Initial Patent Examination for further processing.

Latrice Bond
Paralegal Specialist
Office of Petitions
Office of the Deputy Commissioner
for Patent Examination Policy

UNITED STATES PATENT AND TRADEMARK OFFICE

COMMISSIONER FOR PATENT
UNITED STATES PATENT AND TRADEMARK OFFIC
WASHINGTON, D.C. 20231
www.uspto.go

Paper No. 5

MEDTRONIC, INC.
710 MEDTRONIC PARKWAY NE
MS-LC340
MINNEAPOLIS, MN 55432-5604

COPY MAILED
MAY 0 6 2003
OFFICE OF PETITIONS

In re Application of :
Pierre A. Grandjean :
Application No. 10/127,037 : ON PETITION
Filed: April 22, 2002 :
Attorney Docket No. P-10157 :

This is a decision on the petition under 37 CFR 1.137(b), filed January 2, 2003, to revive the above-identified application.

The petition is **GRANTED**.

The above-identified application became abandoned for failure to reply in a timely manner to the Notice to File Missing Parts of Application (Notice) mailed May 30, 2002. The Notice set a period for reply of two (2) months from the mail date of the Notice. No extensions of time under the provisions of 37 CFR 1.136(a) were obtained. Accordingly, the above-identified application became abandoned on July 31, 2002.

Telephone inquiries concerning this decision should be directed to Irvin Dingle at (703) 306-5684.

The application file is being forwarded to Initial Patent Examination Unit.

Irvin Dingle
Petitions Examiner
Office of Petitions
Office of the Deputy Commissioner
for Patent Examination Policy

UNITED STATES PATENT AND TRADEMARK OFFICE

COMMISSIONER FOR PATENTS
UNITED STATES PATENT AND TRADEMARK OFFICE
WASHINGTON, D.C. 20231
www.uspto.gov

Paper No. 5

MEDTRONIC, INC.
710 MEDTRONIC PARKWAY, NE
MS-LC340
MINNEAPOLIS, MN 55432

COPY MAILED

APR 25 2003

OFFICE OF PETITIONS

In re Application of :
Struble, et al. :
Application No. 10/127,038 : ON PETITION
Filed: April 22, 2002 :
Attorney Docket No. P-10321 :

This is a decision on the petition under 37 CFR 1.137(b), filed January 2, 2003, to revive the above-identified application.

The petition is **GRANTED**.

The above-identified application became abandoned for failure to reply in a timely manner to the Notice to File Missing Parts of Application (Notice) mailed May 29, 2002. The Notice set a period for reply of two (2) months from the mail date of the Notice. No extensions of time under the provisions of 37 CFR 1.136(a) were obtained. Accordingly, the above-identified application became abandoned on July 30, 2002.

The file is being forwarded to the Office of Initial Patent Examination for further processing.

Telephone inquiries concerning this matter may be directed to the undersigned at (703) 306-9200.

Edward J. Tannouse
Petitions Attorney
Office of Petitions
United States Patent and Trademark Office

UNITED STATES PATENT AND TRADEMARK OFFICE

COMMISSIONER FOR PATENTS
UNITED STATES PATENT AND TRADEMARK OFFICE
WASHINGTON, D.C. 20231
www.uspto.gov

Paper No. 5

MEDTRONIC INC
710 MEDTRONIC PARKWAY NE
MS-LC340
MINNEAPOLIS, MN 55432-5604

COPY MAILED

FEB 1 1 2003

OFFICE OF PETITIONS

In re Application of	:	
Chester Struble et al	:	
Application No. 10/127,041	:	ON PETITION
Filed: April 22, 2002	:	
Attorney Docket No. P-9929.00	:	

This is a decision on the petition under 37 CFR 1.137(b), filed January 20, 2003, to revive the above-identified application.

The petition is **GRANTED**.

The above-identified application became abandoned for failure to reply in a timely manner to the Notice to File Missing Parts of Nonprovisional Application (Notice) mailed May 29, 2002. The Notice set a period for reply of two (2) months from the mail date of the Notice. No extensions of time under the provisions of 37 CFR 1.136(a) were obtained. Accordingly, the above-identified application became abandoned on July 30, 2002.

Pursuant to petitioner's authorization, Deposit Account No. 13-2546 was charged a total of $1,430.00 -- $1,300.00 for the petition to revive an unintentionally abandoned application and $130.00 for the surcharge.

Telephone inquiries concerning this decision should be directed to Wan Laymon at (703) 305-9282.

The application file is being forwarded to the Office of Initial Patent Examination.

Wan Laymon
Petitions Examiner
Office of Petitions
Office of the Deputy Commissioner
for Patent Examination Policy

SPE RESPONSE FOR CERTIFICATE OF CORRECTION

Paper No.: _____

DATE :03-16-06

TO SPE OF : ART UNIT 2179

SUBJECT : Request for Certificate of Correction for Appl. No.: 10/127042 Patent No.: 6973625

Please respond to this request for a certificate of correction within 7 days.

Please review the requested changes/corrections as shown in the **COCIN** document(s) in the IFW application image. No new matter should be introduced, nor should the scope or meaning of the claims be changed.

Please complete the response (see below) and forward the completed response to scanning using document code **COCX**.

Certificates of Correction Branch

703-308-9390 ext. _____

Thank You For Your Assistance

The request for issuing the above-identified correction(s) is hereby:

Note your decision on the appropriate box.

- [X] **Approved** — **All** changes apply.
- [ ] **Approved in Part** — Specify below which changes **do not** apply.
- [ ] **Denied** — State the reasons for denial below.

Comments: NONE OF THE CHANGES ARE CONSIDERED SCOPE CHANGED AND ARE TYPOGRAPHICAL IN NATURE.

WEILUN LO

SUPERVISORY PATENT EXAMINER

SPE

2179

Art Unit

UNITED STATES PATENT AND TRADEMARK OFFICE

Commissioner for Patents
United States Patent and Trademark Office
P.O. Box 1450
Alexandria, VA 22313-1450
www.uspto.gov

JOHN S. PRATT
KILPATRICK STOCKTON
1100 PEACHTREE STREET
ATLANTA, GA 30309

COPY MAILED

JUN 13 2005

OFFICE OF PETITIONS

In re Application of	:	
M. Judah Folkman et al	:	
Application No. 10/127,066	:	ON PETITION
Filed: April 22, 2002	:	
Attorney Docket No. 05213-0612(43170-272529)	:	

This is a decision on the petition under 37 CFR 1.137(b), filed May 20, 2005, to revive the above-identified application.

The petition is **GRANTED**.

The above-identified application became abandoned for failure to reply in a timely manner to the non-final Office action mailed May 19, 2004, which set a shortened statutory period for reply of one (1) month. No extensions of time under the provisions of 37 CFR 1.136(a) were obtained. Accordingly, the above-identified application became abandoned on June 20, 2004.

Telephone inquiries concerning this decision should be directed to Wan Laymon at (571) 272-3220.

This matter is being referred to Technology Center AU 1653.

Wan Laymon

Wan Laymon
Petitions Examiner
Office of Petitions
Office of the Deputy Commissioner
for Patent Examination Policy

UNITED STATES PATENT AND TRADEMARK OFFICE

Commissioner for Patents
United States Patent and Trademark Office
P.O. Box 1450
Alexandria, VA 22313-1450
www.uspto.gov

COPY MAILED
NOV 09 2007
OFFICE OF PETITIONS

JOHN S. PRATT, ESQ
KILPATRICK STOCKTON, LLP
1100 PEACHTREE STREET
ATLANTA, GA 30309

In re Application of M. Judah Folkman Application No. 10/127,066 Filed: April 22, 2002 Attorney Docket No. 05213-0612 (43170-272529)	DECISION GRANTING PETITION UNDER 37 CFR 1.313(c)(2)

This is a decision on the petition under 37 CFR 1.313(c)(2), filed October 30, 2007, to withdraw the above-identified application from issue after payment of the issue fee.

The petition is **GRANTED**.

The above-identified application is withdrawn from issue for consideration of a submission under 37 CFR 1.114 (request for continued examination). *See* 37 CFR 1.313(c)(2).

Petitioner is advised that the issue fee paid on September 28, 2007 cannot be refunded. If, however, this application is again allowed, petitioner may request that it be applied towards the issue fee required by the new Notice of Allowance.[1]

Telephone inquiries regarding this decision should be directed to April Wise at (571) 272-1642.

This application is being referred to Technology Center AU 1653 for processing of the request for continued examination under 37 CFR 1.114 and for consideration of the concurrently filed amendment.

Frances Hicks

Frances M. Hicks
Petitions Examiner
Office of Petitions

---

[1] *The request to apply the issue fee to the new Notice may be satisfied by completing and returning the new Part B – Fee(s) Transmittal Form (along with any balance due at the time of submission). Petitioner is advised that the Issue Fee Transmittal Form* ***must*** *be completed and timely submitted to avoid abandonment of the application.*

PTO/SB/66 (03-09)
Approved for use through 03/31/2012. OMB 0651-0016
U.S. Patent and Trademark Office: U.S. DEPARTMENT OF COMMERCE
Under the Paperwork Reduction Act of 1995, no persons are required to respond to a collection of information unless it displays valid OMB control number.

PETITION TO ACCEPT UNINTENTIONALLY DELAYED PAYMENT OF MAINTENANCE FEE IN AN EXPIRED PATENT (37 CFR 1.378(c))

Patent Number	Issue Date (YYYY-MM-DD)	Application Number	Filing Date (YYYY-MM-DD)	Docket Number (if applicable)
7013427	2006-03-14	10127069	2002-04-19	

CAUTION: Maintenance fee (and surcharge, if any) payment must correctly identify: (1) the patent number and (2) the application number of the actual U.S. application leading to issuance of that patent to ensure the fee(s) is/are associated with the correct patent. 37 CFR 1.366(c) and (d).

SMALL ENTITY
☒ Patentee claims, or has previously claimed, small entity status. See 37 CFR 1.27.

LOSS OF ENTITLEMENT TO SMALL ENTITY STATUS
☐ Patentee is no longer entitled to small entity status. See 37 CFR 1.27(g)

NOT Small Entity			Small Entity		
	Fee	Code		Fee	Code
○	3 ½ year	(1551)	◉	3 ½ year	(2551)
○	7 ½ year	(1552)	○	7 ½ year	(2552)
○	11 ½ year	(1553)	○	11 ½ year	(2553)

SURCHARGE
The surcharge required by 37 CFR 1.20(i)(2) (Fee Code 1558) must be paid as a condition of accepting unintentionally delayed payment of the maintenance fee.

MAINTENANCE FEE (37 CFR 1.20(e)-(g))
The appropriate maintenance fee must be submitted with this petition.

STATEMENT
THE UNDERSIGNED CERTIFIES THAT THE DELAY IN PAYMENT OF THE MAINTENANCE FEE TO THIS PATENT WAS UNINTENTIONAL

PETITIONER(S) REQUEST THAT THE DELAYED PAYMENT OF THE MAINTENANCE FEE BE ACCEPTED AND THE PATENT REINSTATED

THIS PORTION MUST BE COMPLETED BY THE SIGNATORY OR SIGNATORIES

37 CFR 1.378(d) states: "Any petition under this section must be signed by an attorney or agent registered to practice before the Patent and Trademark Office, or by the patentee, the assignee, or other party in interest."

I certify, in accordance with 37 CFR 1.4(d)(4) that I am

◉ An attorney or agent registered to practice before the Patent and Trademark Office

○ A sole patentee

○ A joint patentee; I certify that I am authorized to sign this submission on behalf of all the other patentees.

○ A joint patentee; all of whom are signing this e-petition

○ The assignee of record of the entire interest

Patent Practitioner			
A signature of the applicant or representative is required in accordance with 37 CFR 1.33 and 10.18. Please see 37 CFR 1.4(d) for the form of the signature			
Signature	/Caroline L Keller/	Date (YYYY-MM-DD)	2010-04-26
Name	Caroline L. Keller, Esq.	Registration Number	50491

This collection of information is required by 37 CFR 1.378(c). The information is required to obtain or retain a benefit by the public which is to file (and by the USPTO to process) an application. Confidentiality is governed by 35 U.S.C. 122 and 37 CFR 1.11 and 1.14. This collection is estimated to take 1 hour to complete, including gathering, preparing, and submitting the completed application form to the USPTO. Time will vary depending upon the individual case. Any comments on the amount of time you require to complete this form and/ or suggestions for reducing this burden, should be sent to the Chief Information Officer, U.S. Patent and Trademark Office, U.S. Department of Commerce, P.O. Box 1450, Alexandria, VA 22313-1450. DO NOT SEND FEES OR COMPLETED FORMS TO THIS ADDRESS. **This form can only be used when in conjunction with EFS-Web. If this form is mailed to the USPTO, it may cause delays in reinstating the patent.**

Privacy Act Statement

The Privacy Act of 1974 (P.L. 93-579) requires that you be given certain information in connection with your submission of the attached form related to a patent application or patent. Accordingly, pursuant to the requirements of the Act, please be advised that: (1) the general authority for the collection of this information is 35 U.S.C. 2(b)(2); (2) furnishing of the information solicited is voluntary; and (3) the principal purpose for which the information is used by the U.S. Patent and Trademark Office is to process and/or examine your submission related to a patent application or patent. If you do not furnish the requested information, the U.S. Patent and Trademark Office may not be able to process and/or examine your submission, which may result in termination of proceedings or abandonment of the application or expiration of the patent.

The information provided by you in this form will be subject to the following routine uses:

1. The information on this form will be treated confidentially to the extent allowed under the Freedom of Information Act (5 U.S.C. 552) and the Privacy Act (5 U.S.C. 552a). Records from this system of records may be disclosed to the Department of Justice to determine whether the Freedom of Information Act requires disclosure of these records.

2. A record from this system of records may be disclosed, as a routine use, in the course of presenting evidence to a court, magistrate, or administrative tribunal, including disclosures to opposing counsel in the course of settlement negotiations.

3. A record in this system of records may be disclosed, as a routine use, to a Member of Congress submitting a request involving an individual, to whom the record pertains, when the individual has requested assistance from the Member with respect to the subject matter of the record.

4. A record in this system of records may be disclosed, as a routine use, to a contractor of the Agency having need for the information in order to perform a contract. Recipients of information shall be required to comply with the requirements of the Privacy Act of 1974, as amended, pursuant to 5 U.S.C. 552a(m).

5. A record related to an International Application filed under the Patent Cooperation Treaty in this system of records may be disclosed, as a routine use, to the International Bureau of the World Intellectual Property Organization, pursuant to the Patent Cooperation Treaty.

6. A record in this system of records may be disclosed, as a routine use, to another federal agency for purposes of National Security review (35 U.S.C. 181) and for review pursuant to the Atomic Energy Act (42 U.S.C. 218(c)).

7. A record from this system of records may be disclosed, as a routine use, to the Administrator, General Services, or his/her designee, during an inspection of records conducted by GSA as part of that agency's responsibility to recommend improvements in records management practices and programs, under authority of 44 U.S.C. 2904 and 2906. Such disclosure shall be made in accordance with the GSA regulations governing inspection of records for this purpose, and any other relevant (i.e., GSA or Commerce) directive. Such disclosure shall not be used to make determinations about individuals.

8. A record from this system of records may be disclosed, as a routine use, to the public after either publication of the application pursuant to 35 U.S.C. 122(b) or issuance of a patent pursuant to 35 U.S.C. 151. Further, a record may be disclosed, subject to the limitations of 37 CFR 1.14, as a routine use, to the public if the record was filed in an application which became abandoned or in which the proceedings were terminated and which application is referenced by either a published application, an application open to public inspections or an issued patent.

9. A record from this system of records may be disclosed, as a routine use, to a Federal, State, or local law enforcement agency, if the USPTO becomes aware of a violation or potential violation of law or regulation.

UNITED STATES PATENT AND TRADEMARK OFFICE

Commissioner for Patents
United States Patent and Trademark Office
P.O. Box 1450
Alexandria, VA 22313-1450
www.uspto.gov

In re Patent No. 7013427
Issue Date: March 14,2006
Application No. 10127069
Filed: April 19,2002
Attorney Docket No. GRIF-001

:
:DECISION GRANTING PETITION
:UNDER 37 CFR 1.378(c)
:

This is a decision on the electronic petition, filed April 26,2010 ,under 37 CFR 1.378(c) to accept the unintentionally delayed payment of the 3.5 year maintenance fee for the above-identified patent.

The petition is **GRANTED**.

The maintenance fee is accepted, and the above-identified patent reinstated as of April 26,2010 .
This decision also constitutes notice that the fee has been accepted. An electronic copy of the petition and this decision has been created as an entry in the Image File Wrapper. Nevertheless, petitioner should print and retain an independent copy.

Telephone inquiries related to this electronic decision should be directed to the Electronic Business Center at 1-866-217-9197.

UNITED STATES PATENT AND TRADEMARK OFFICE

UNDER SECRETARY OF COMMERCE FOR INTELLECTUAL PROPERTY AND
DIRECTOR OF THE UNITED STATES PATENT AND TRADEMARK OFFICE
WASHINGTON, D.C. 20231
www.uspto.gov

Paper No. 5

Alcatel USA
Intellectual Property Department
3400 W. Plano Parkway, MS Legl2
Plano, TX 75075

MAILED

MAY 15 2003

OFFICE OF DIRECTOR
GROUP

In re Application of
Aaron G. Arellano
Application No. 10/127,089
Filed: April 22, 2002
For: FLEXIBLE OPTICAL CIRCUIT FOR USE IN AN ERBIUM-DOPED FIBER AMPLIFIER AND METHOD FOR FABRICATING THE FLEXIBLE OPTICAL CIRCUIT

DECISION ON REQUEST TO WITHDRAW FROM RECORD

This is a decision on the request filed by Jessica W. Smith to withdraw as attorney/agent of record pursuant to 37 C.F.R. § 1.36 filed on March 25, 2003. Ms. Smith signed on behalf of all attorneys/agents of record in this application.

The request is **APPROVED** for the withdrawal of all of the attorneys/agents presently of record. The withdrawal is effective as of the date of this letter not when the request for withdrawal was filed.

The application currently has no attorney/agent of record.

As requested, all future communications from the Office will be directed to Charles R. Ducker, Jr. at the address provided below unless otherwise notified by applicant.

Edward Westin

Edward Westin, Special Programs Examiner
Technology Center 2800
Semiconductors, Electrical and Optical
Systems and Components

cc: Charles R. Ducker, Jr.
Lanier Ford Shaver & Payne, P.C.
P.O. Box 2087
Huntsville, AL 35804-2087

UNITED STATES PATENT AND TRADEMARK OFFICE

UNITED STATES DEPARTMENT OF COMMERCE
United States Patent and Trademark Office
Address: COMMISSIONER FOR PATENTS
P.O. Box 1450
Alexandria, Virginia 22313-1450
www.uspto.gov

APPLICATION NO.	FILING DATE	FIRST NAMED INVENTOR	ATTORNEY DOCKET NO.	CONFIRMATION NO.
10/127,106	04/22/2002	Brian J. Campbell	BP2241	3180

51472 7590 12/02/2008
GARLICK HARRISON & MARKISON
P.O. BOX 160727
AUSTIN, TX 78716-0727

EXAMINER
KERVEROS, JAMES C

ART UNIT	PAPER NUMBER
2133	

MAIL DATE	DELIVERY MODE
12/02/2008	PAPER

Please find below and/or attached an Office communication concerning this application or proceeding.

The time period for reply, if any, is set in the attached communication.

SPE RESPONSE FOR CERTIFICATE OF CORRECTION

Paper No.:20081110

DATE : November 10, 2008

TO SPE OF : ART UNIT 2117

SUBJECT : Request for Certificate of Correction on Patent No.: 6,925,590

A response is requested with respect to the accompanying request for a certificate of correction.

Please complete this form and return with file, within **7** days to:
Certificates of Correction Branch - ST (South Tower) 9A22
Palm location **7590** - Tel. No. (703) 305-8309

With respect to the change(s) requested, correcting Office and/or Applicant's errors, should the patent read as shown in the certificate of correction? No new matter should be introduced, nor should the scope or meaning of the claims be changed.

Thank You For Your Assistance **Certificates of Correction Branch**

The request for issuing the above-identified correction(s) is hereby:

Note your decision on the appropriated box.

☐ **Approved** All changes apply.

☐ **Approved in Part** Specify below which changes **do not** apply.

☒ **Denied** State the reasons for denial below.

Comments:

The US Provisional application No. 60/438,528, filed on Jan. 8, 2003, in the certificate of correction, is not related to the above Patent No. 6,925,590, US application No. 10/127,106, filed on 04/22/2002.

Instead, the Provisional Application 60/438,528 is related to the US application No. 10/40,0406 , filed on 03/28/2003, now pending.

EDAN/IFW, US application No. 10/127,106 includes the wrong paper for the PRELIMINARY AMENDMENT (A.PE, 7/8/2002) associated with the US Appliaction 10/400,406.

/Scott T Baderman/
Supervisory Patent Examiner, Art Unit 2114

UNITED STATES PATENT AND TRADEMARK OFFICE

Commissioner for Patents
United States Patent and Trademark Office
P.O. Box 1450
Alexandria, VA 22313-1450
www.uspto.gov

CARR & FERRELL LLP
2200 GENG ROAD
PALO ALTO CA 94303

COPY MAILED

MAR 2 2 2007

OFFICE OF PETITIONS

In re Application of	
Michael Michio Ouye, et al.	
Application No. 10/127,109	DECISION ON PETITION
Filed: April 22, 2002	TO WITHDRAW
Attorney Docket No. SS012	FROM RECORD

This is a decision on the Request to Withdraw as attorney or agent of record under 37 C.F.R. § 1.36(b) filed November 20, 2006.

The request is **DISMISSED** as moot.

A review of the file record indicates that the power of attorney to Carr & Ferrell, LLP has been revoked by the assignee of the patent application on March 5, 2007. Accordingly, the request to withdraw under 37 C.F.R. § 1.36(b) is moot.

All future communications from the Office will continue to be directed to the below-listed address until otherwise notified by applicant.

There is an outstanding Office action mailed October 2, 2006 that requires a response by the applicant.

Telephone inquires concerning this decision should be directed to undersigned at 571-272- 1642.

April M. Wise
Petitions Examiner
Office of Petitions

cc: RYAN MORRISON
INVENTION LAW GROUP
1756 – 114TH AVENUE SE
SUITE 110
BELLEVUE, WA 98004

UNITED STATES PATENT AND TRADEMARK OFFICE

Commissioner for Patents
United States Patent and Trademark Office
Washington, D.C. 20231
www.uspto.gov

Paper No. 5

COPY MAILED

OCT 1 5 2002

OFFICE OF PETITIONS

Robert C. Klinger
JACKSON WALKER LLP.
Suite 600
2435 NORTH CENTRAL EXPRESSWAY
RICHARDSON, TX 75080

In re Application of:
Darin Wayne Higgins and
Dan Martin Scott
Application No. 10/127,115
Filed: August 7, 2001
Title of Invention: SYSTEM AND METHOD FOR SYNCHRONIZING MAP IMAGES

DECISION REFUSING STATUS UNDER 37 CFR 1.47(a)

This is a decision on the Petition under 37 CFR 1.47(a), to allow the other inventor(s) to proceed with the application on behalf of himself or herself and the nonsigning inventor.

The petition is **dismissed**.

Rule 47 applicant is given TWO (2) MONTHS from the mailing date of this decision to reply, correcting the below-noted deficiencies. Any reply should be entitled "Request for Reconsideration of Petition Under 37 CFR 1.47(a)", and should only address the deficiencies noted below, except that the reply may include an oath or declaration executed by the non-signing inventor. Failure to respond will result in abandonment of the application. Any extensions of time will be governed by 37 CFR 1.136(a).

The above-identified application was filed on April 22, 2002, without a fully executed oath or declaration. Accordingly, on July 2, 2002, a "Notice to File Missing Parts of Nonprovisional Application" (hereinafter "Notice") was mailed to Petitioner. The Notice required, in relevant part, a fully executed oath or declaration.

A grantable petition under 37 CFR 1.47(a) requires: (1) proof that the non-signing inventor cannot be reached or refuses to sign the oath or declaration after having been presented with the application papers (specification, claims and drawings); (2) an acceptable oath or declaration in compliance with 35 U.S.C. §§ 115 and 116; (3) the petition fee; and (4) a statement of the last known address of the non-signing inventor. Applicant lacks item (2) as set forth above.

As to item (2), Petitioner has failed to provide an acceptable oath or declaration. Petitioner submits a one-page Declaration listing only one inventor: Dan Martin Scott. A Declaration listing all inventors is required.

The Manual for Patent Examining Procedure ("MPEP"), section 409.03(a)(A) provides:

> All the available joint inventors must (1) make oath or declaration on their own behalf as required by 37 CFR 1.63 or 1.75 (see MPEP § 602, § 605.01, and § 1414) and (2) make oath or declaration on behalf of the nonsigning joint inventor as required by 37 CFR 1.64. An oath or declaration signed by all the available joint inventors *with the signature block of the nonsigning inventor(s) left blank* may be treated as having been signed by all the available inventors on behalf of the nonsigning inventor(s) unless otherwise indicated. (Emphasis supplied).

MPEP 409.03(a).

A Declaration listing all inventors, signed by the available inventors with the signature block of the non-signing inventor(s) left blank, is required.

Further correspondence with respect to this matter should be addressed as follows:

By mail: Commissioner for Patents
Box DAC
Washington, D.C. 20231

By FAX: (703) 308-6916
Attn: Office of Petitions

By hand: Crystal Plaza Four, Suite 3C23
2201 S. Clark Place
Arlington, VA 22202

Telephone inquiries related to this decision may be directed to the undersigned at (703) 305-0014.

Derek L. Woods
Petitions Attorney
Office of Petitions
Office of the Deputy Commissioner
for Patent Examination Policy

OIPE JC11
OCT 3 0 2002
PATENT & TRADEMARK OFFICE

UNITED STATES PATENT AND TRADEMARK OFFICE

Commissioner for Patents
United States Patent and Trademark Office
Washington, D.C. 20231
www.uspto.gov

108344.39

RECEIVED
OCT 2 1 2002
By

Paper No. 5

COPY MAILED

OCT 1 5 2002

OFFICE OF PETITIONS

Robert C. Klinger
JACKSON WALKER LLP.
Suite 600
2435 NORTH CENTRAL EXPRESSWAY
RICHARDSON, TX 75080

In re Application of:
Darin Wayne Higgins and
Dan Martin Scott
Application No. 10/127,115
Filed: August 7, 2001
Title of Invention: SYSTEM AND METHOD FOR SYNCHRONIZING MAP IMAGES:

DECISION REFUSING STATUS UNDER 37 CFR 1.47(a)

Req. for Reconsideration due: Dec 15, 2002

This is a decision on the Petition under 37 CFR 1.47(a), to allow the other inventor(s) to proceed with the application on behalf of himself or herself and the nonsigning inventor.

The petition is **dismissed**.

Rule 47 applicant is given TWO (2) MONTHS from the mailing date of this decision to reply, correcting the below-noted deficiencies. Any reply should be entitled "Request for Reconsideration of Petition Under 37 CFR 1.47(a)", and should only address the deficiencies noted below, except that the reply may include an oath or declaration executed by the non-signing inventor. Failure to respond will result in abandonment of the application. Any extensions of time will be governed by 37 CFR 1.136(a).

The above-identified application was filed on April 22, 2002, without a fully executed oath or declaration. Accordingly, on July 2, 2002, a "Notice to File Missing Parts of Nonprovisional Application" (hereinafter "Notice") was mailed to Petitioner. The Notice required, in relevant part, a fully executed oath or declaration.

A grantable petition under 37 CFR 1.47(a) requires: (1) proof that the non-signing inventor cannot be reached or refuses to sign the oath or declaration after having been presented with the application papers (specification, claims and drawings); (2) an acceptable oath or declaration in compliance with 35 U.S.C. §§ 115 and 116; (3) the petition fee; and (4) a statement of the last known address of the non-signing inventor. Applicant lacks item (2) as set forth above.

done

As to item (2), Petitioner has failed to provide an acceptable oath or declaration. Petitioner submits a one-page Declaration listing only one inventor: Dan Martin Scott. A Declaration listing all inventors is required.

The Manual for Patent Examining Procedure ("MPEP"), section 409.03(a)(A) provides:

RECEIVED
OCT 3 1 2002
OFFICE OF PETITIONS

DOCKETED
by dep 10/21/02

> All the available joint inventors must (1) make oath or declaration on their own behalf as required by 37 CFR 1.63 or 1.75 (see MPEP § 602, § 605.01, and § 1414) and (2) make oath or declaration on behalf of the nonsigning joint inventor as required by 37 CFR 1.64. An oath or declaration signed by all the available joint inventors *with the signature block of the nonsigning inventor(s) left blank* may be treated as having been signed by all the available inventors on behalf of the nonsigning inventor(s) unless otherwise indicated. (Emphasis supplied).

MPEP 409.03(a).

deny

A Declaration listing all inventors, signed by the available inventors with the signature block of the non-signing inventor(s) left blank, is required.

Further correspondence with respect to this matter should be addressed as follows:

By mail: Commissioner for Patents
Box DAC
Washington, D.C. 20231

By FAX: (703) 308-6916
Attn: Office of Petitions

By hand: Crystal Plaza Four, Suite 3C23
2201 S. Clark Place
Arlington, VA 22202

Telephone inquiries related to this decision may be directed to the undersigned at (703) 305-0014.

Derek L. Woods

Derek L. Woods
Petitions Attorney
Office of Petitions
Office of the Deputy Commissioner
for Patent Examination Policy

UNITED STATES PATENT AND TRADEMARK OFFICE

Commissioner for Patents
United States Patent and Trademark Office
Washington, D.C. 20231
www.uspto.gov

Paper No. 7

Robert C. Klinger
JACKSON WALKER LLP.
Suite 600
2435 NORTH CENTRAL EXPRESSWAY
RICHARDSON, TX 75080

COPY MAILED

NOV 0 7 2002

OFFICE OF PETITIONS

In re Application of:
Darin Wayne Higgins and
Dan Martin Scott
Application No. 10/127,115
Filed: August 7, 2001
Title of Invention: SYSTEM AND METHOD FOR SYNCHRONIZING MAP IMAGES

DECISION GRANTING STATUS UNDER 37 CFR 1.47(a)

This is in response to a Request for Reconsideration of Petition Under 37 C.F.R. 1.47(a), filed October 30, 2002, to allow the other inventor(s) to proceed with the application on behalf of himself or herself and the nonsigning inventor.

The petition is **granted**.

The above-identified application and papers have been reviewed and found in compliance with 37 CFR 1.47(a). This application is hereby accorded Rule 1.47(a) status.

Petitioner has shown that the non-signing inventor, Darin Wayne Higgins, refuses to sign the declaration after being presented with the above-identified application and declaration.

As provided in Rule 1.47(a), this Office will forward notice of this application's filing to the non-signing inventor at the addresses given in the Petition. Notice of the filing of this application will also be published in the Official Gazette.

The application file is being forwarded to the Office of Initial Patent Examination for continued processing.

Telephone inquiries related to this decision may be directed to the undersigned at (703) 305-0014.

Derek L. Woods
Petitions Attorney
Office of Petitions
Office of the Deputy Commissioner
for Patent Examination Policy

UNITED STATES PATENT AND TRADEMARK OFFICE

COMMISSIONER FOR PATENTS
UNITED STATES PATENT AND TRADEMARK OFFICE
P.O. BOX 1450
ALEXANDRIA, VA 22313-1450
www.uspto.gov

HEWLETT PACKARD COMPANY
P O BOX 272400, 3404 E. HARMONY ROAD
INTELLECTUAL PROPERTY ADMINISTRATION
FORT COLLINS CO 80527-2400

COPY MAILED

DEC 1 1 2008

OFFICE OF PETITIONS

In re Application of
Monica J. Shaughnessy, et al.
Application No. 10/127,119
Filed: April 22, 2002
Attorney Docket No. 200302523-1

DECISION ON PETITION

This is a decision on the petition under the unintentional provisions of 37 CFR 1.137(b), filed November 13, 2008, to revive the above-identified application.

The petition is **GRANTED**.

This application became abandoned as a result of petitioner's failure to file a complete and proper appeal brief within the time period provided in 37 CFR 41.37(a)(1). As a complete and proper appeal brief was not filed within one (1) month of the Notification of Non-Compliance with 37 CFR 41.37(c)(1), mailed February 26, 2008, and no extensions of time under the provisions of 37 CFR 1.136(a) were obtained, the appeal was dismissed and the proceedings as to the rejected claims were terminated. *See* 37 CFR 1.197(b). As no claim was allowed, the application became abandoned at midnight on March 26, 2008. *See* MPEP 1215.04.

The petition satisfies the requirements of 37 CFR 1.137(b) in that petitioner has supplied (1) the reply in the form of a Supplement Appeal Brief, (2) the petition fee of $1,620.00, and (3) a proper statement of unintentional delay.

Telephone inquiries concerning this decision should be directed to the undersigned at (571)272-3213.

This application is being referred to Technology Center AU3622 for appropriate action by the Examiner in the normal course of business on the reply received November 13, 2008.

Cheryl Gibson Baylor

Cheryl Gibson-Baylor
Petitions Examiner
Office of Petitions

UNITED STATES PATENT AND TRADEMARK OFFICE

COMMISSIONER FOR PATENTS
UNITED STATES PATENT AND TRADEMARK OFFICE
WASHINGTON, D.C. 20231
www.uspto.gov
DIW 09-02

Paper No. 3

HARRIS ZIMMERMAN
LAW OFFICES OF HARRIS ZIMMERMAN
SUITE 710
1330 BROADWAY,
OAKLAND CA 94612-2506

COPY MAILED

SEP 1 6 2002

OFFICE OF PETITIONS

In re Application of	:
Allan Berman	:
Application No. 10/127,161	: DECISION DISMISSING
Filed: 22 April, 2002	: PETITION
Attorney Docket No. 4243	:

This is a decision on the petition filed on 20 June, 2002, which is treated as a petition under 37 CFR 1.53 requesting that the above-identified application be accorded a filing date of 15 April, 2002, instead of the presently accorded filing date of 22 April, 2002.

The petition is **dismissed**.

Petitioner alleges that the application was deposited in first class mail with the U.S. Post Office on 12 April, 2002.

Petitioner's counsel asserts:

> It was the undersigned's understanding during the April 12, 2002 time frame that first class mail from Oakland to Washington, D.C. would not take longer than two days. By mailing the utility patent application on April 12, 2002, a Friday, the application was believed certain to arrive at the PTO by Monday, April 15, 2002.

Petitioner further asserts that the 15 April, 2002, filing date is necessary in order to claim priority to provisional Application No. 60/283,723, filed on 16 April, 2001.

Petitioner's arguments have been considered, but are not persuasive. The U.S. Patent and Trademark Office (Office) file is the official record of the papers originally filed in this application. A review of the papers originally filed reveals that no application papers were received on 15 April, 2002. An

applicant alleging that a paper was filed in the Office and later misplaced has the burden of proving the allegation by a preponderance of the evidence. The fact that petitioner believes that the application was (or should have been) received in the Office on 15 April, 2002, is not more persuasive than the date the papers are shown to have been received in the official file. Additionally, petitioners should note that the return receipt postcard serves as *prima facie* evidence of *receipt* in the USPTO of all the items listed thereon *on the date stamped thereon by the USPTO,* **not** the date petitioners placed on the card before mailing the application to the USPTO. Petitioners' postcard receipt shows a USPTO Office date stamp of 22 April, 2002. Therefore, the postcard receipt is *prima facie* evidence that the application was received on 22 April, 2002, not 15 April, 2002.

While it is unfortunate that petitioner's application was received in the USPTO on a date later than that desired by petitioners, petitioners are advised that they could have avoided the predicament that has now occurred by filing the application via USPS Express Mail Post Office to Addressee service in accordance with 37 CFR 1.10. Any correspondence received by the USPTO that was delivered by the "Express Mail Post Office to Addressee" service of the USPS will be considered filed in the Office on the date of deposit with the USPS. However, since the present application was not filed by Express Mail, the provisions of 37 CFR 1.10 are not available. In choosing not to send the application papers by Express Mail Post Office to Addressee Service, petitioner assumed the risk that the application would not be accorded the desired filing date because of delays in the delivery of mail or receipt in the USPTO. Petitioners simply have no evidence that the application is entitled to a filing date other than 22 April, 2002.

In summary, petitioners have not shown by a preponderance of the evidence that the application papers were received on 15 April, 2002. The petition is therefore <u>dismissed</u>.

As this petition is not due to an error on the part of the USPTO, a petition fee of $130.00 will be assessed to counsel's deposit account, No. 26-0265.

The application is being returned to the Office of Initial Patent Examination for further processing with a filing date of 22 April, 2002, using the application papers filed on that date.

Telephone inquiries concerning this matter may be directed to the undersigned at (703)308-6918.

Douglas I. Wood
Senior Petitions Attorney
Office of Petitions
Office of the Deputy Commissioner
for Patent Examination Policy

UNITED STATES PATENT AND TRADEMARK OFFICE

COMMISSIONER FOR PATENTS
UNITED STATES PATENT AND TRADEMARK OFFICE
P.O. BOX 1450
ALEXANDRIA, VA 22313-1450
www.uspto.gov

PHILIP S. JOHNSON
JOHNSON & JOHNSON
ONE JOHNSON & JOHNSON PLAZA
NEW BRUNSWICK, NJ 08933-7003

COPY MAILED

FEB 15 2008

OFFICE OF PETITIONS

ON PETITION

In re Application of :
Bennie W. Gladdish, Jr. :
Application No. 10/127,191 :
Filed: April 22, 2002 :
Attorney Docket No. CRD-1030 :

This is a decision on the petition under 37 CFR 1.137(b), filed on March 13, 2007, to revive the above-identified application.

The above application became abandoned for failure to file a proper reply to the final Office action mailed August 8, 2006. A Notice of Abandonment was mailed on March 6, 2007.

The petition satisfies the requirements of 37 CFR 1.137(b), in that, petitioner has supplied (1) the reply in the form of a Request for Continued Examination (RCE) under 37 CFR 1.114, with the $790filing fee; (2) the petition fee of $1,500; and (3) a proper statement of unintentional delay. Therefore, the petition is **GRANTED**.

This application is being revived for consideration of the RCE.

The application file is being referred to Technology Center Art Unit 3731, for further processing.

Telephone inquiries concerning this decision should be directed to the undersigned at (571) 272-3226.

Andrea Smith
Petitions Examiner
Office of Petitions

UNITED STATES PATENT AND TRADEMARK OFFICE

COMMISSIONER FOR PATENTS
UNITED STATES PATENT AND TRADEMARK OFFICE
P.O. BOX 1450
ALEXANDRIA, VA 22313-1450
www.uspto.gov

Paper No. 13

RYNDAK & SURI
Suite 2630
30 N. LaSalle Street
Chicago IL 60602

COPY MAILED

OCT 2 4 2003

OFFICE OF PETITIONS

In re Application of
Gerald A. Sus, et al.
Application No. 10/127,202
Filed: April 22, 2002
Attorney Docket No. 25570-48154

DECISION GRANTING PETITION
UNDER 37 CFR 1.137(f)

This is a decision on the petition, filed October 6, 2003, to revive the instant nonprovisional application under the unintentional provisions of 37 CFR 1.137(f).

The petition is **GRANTED**.

Petitioner states that the instant nonprovisional application is the subject of an application filed in a foreign country on April 21, 2003. However, the U.S. Patent and Trademark Office was unintentionally not notified of this filing within 45 days subsequent to the filing of the subject application in a foreign country.

In view of the above, this application became abandoned pursuant to 35 U.S.C. § 122(b)(2)(B)(iii) and 37 CFR 1.213(c) for failure to timely notify the Office of the filing of an application in a foreign country, or under a multilateral international agreement, that requires publication of applications 18 months after filing.

A petition under 37 CFR 1.137(f) must be accompanied by:

(1) the reply which is met by the notification of such filing in a foreign country or under a multinational treaty;

(2) the petition fee as set forth in 37 CFR 1.17(m); and

(3) a statement that the entire delay in filing the required reply from the due date of the reply until the filing of a grantable petition was unintentional.

The instant petition has been found to be in compliance with 37 CFR 1.137(f). Accordingly, the failure to timely notify the Office of a foreign or international filing within 45 days after the date of filing of such foreign or international application as provided by 35 U.S.C. § 122(b)(2)(B)(iii) and 37 CFR 1.213(c) is accepted as having been unintentionally delayed.

Any inquiries concerning this decision may be directed to the undersigned at (703) 305-9220.

This application is being forwarded to Technology Center Art Unit 3721 to await a reply to the non-final Office action mailed August 15, 2003. Failure to timely reply to the August 15, 2003 Office action will again result in the abandonment of the application.

Sherry D. Brinkley
Petitions Examiner
Office of Petitions
Office of the Deputy Commissioner
for Patent Examination Policy

Conferee: Frances M. Hicks
Lead, Petitions Examiner

UNITED STATES PATENT AND TRADEMARK OFFICE

Commissioner for Patents
United States Patent and Trademark Office
P.O. Box 1450
Alexandria, VA22313-1450
www.uspto.gov

RYNDAK & SURI LLP
200 W. MADISON STREET
SUITE 2100
CHICAGO IL 60606

COPY MAILED

MAY 2 4 2007

OFFICE OF PETITIONS

In re Application of
Gerald A. Sus et al.
Application No. 10/127,202
Filed: April 22, 2002
Attorney Docket No. **25570-48154**

DECISION ON PETITION
UNDER § 1.183

This is a decision on the petition, filed April 30, 2007, under 37 CFR 1.47(a), which is being treated under 37 CFR § 1.183 for acceptance of a supplemental declaration without the inclusion of the signatures of all inventors as required by §§ 37 CFR 1.67 and 1.63.[1]

The petition is **DISMISSED**.

All of the joint inventors, signed the original declaration for patent filed in this application, pursuant to § 1.63(d), However, joint inventor Ron Dorsten lined through the address on the printed declaration and corrected his residence address, but inadvertently failed to initial and date the changes on the declaration. Thus, a substitute declaration was required by the Notice of Allowability mailed January 23, 2007 to correct the defect. All joint inventors except Keough and Terrazzano have executed the supplemental declaration.

Petitioners assert that copies of the supplemental declaration were emailed to Mr. Keough's place of business and sent via facsimile transmission to his home but to date he has not returned an executed copy of same. Further petitioners assert that efforts to reach Mr. Terrazzano at his home or by telephone have been unsuccessful. In either case, no details regarding the presentation to Mr. Keough and Mr. Terrazzano has been presented thus, no showing that waiver of the requirement for inventor Keough's and inventor Terrazzano's signatures on the supplemental declaration is warranted.

[1]Once an application has received a fully executed oath or declaration and been placed on the files for examination, the provisions of 37 CFR 1.47 no longer apply. Rather, the remedy for treating an inventor's refusal to also sign a supplemental oath or declaration or to provide all information is a waiver of 37 CFR 1.67 and 1.63. See MPEP 603.

The supplemental declaration provided is not therefore in compliance with 37 CFR § 1.67.

Petitioners are advised however that the fee for a petition under 37 CFR 1.183 is set at $400.00 not $130.00 as is indicated in the petition. Therein, petitioner's deposit account no. 50-0503 has been charged in the amount of $400.00.

Further correspondence with respect to this matter should be addressed as follows:

By mail: Mail Stop Petition
Commissioner for Patents
P.O. Box 1450
Alexandria, VA 22313-1450

By FAX: (571) 273-8300

Telephone inquiries concerning this matter may be directed to the undersigned Petitions Attorney at (571) 272-3212.

Patricia Faison-Ball

Patricia Faison-Ball
Senior Petitions Attorney
Office of Petitions

UNITED STATES PATENT AND TRADEMARK OFFICE

Commissioner for Patents
United States Patent and Trademark Office
P.O. Box 1450
Alexandria, VA 22313-1450
www.uspto.gov

In re Patent No. 6687625
Issue Date: February 3,2004
Application No. 10127224
Filed: April 22,2002
Attorney Docket No. D5491-57

:
:DECISION GRANTING PETITION
:UNDER 37 CFR 1.378(c)
:

This is a decision on the electronic petition, filed March 3,2008 ,under 37 CFR 1.378(c) to accept the unintentionally delayed payment of the 3.5 year maintenance fee for the above-identified patent.

The petition is GRANTED.

The maintenance fee is accepted, and the above-identified patent reinstated as of March 3,2008 . This decision also constitutes notice that the fee has been accepted. An electronic copy of the petition and this decision has been created as an entry in an Image File Wrapper. Nevertheless, petitioner should print and retain an independent copy

Telephone inquires related to this electronic decision should be directed to the Electronic Business Center at 1-866-217-9197.

Under the Paperwork Reduction Act of 1995, no persons are required to respond to a collection of information unless it displays valid OMB control number.

PETITION TO ACCEPT UNINTENTIONALLY DELAYED PAYMENT OF MAINTENANCE FEE IN AN EXPIRED PATENT (37 CFR 1.378(c))

Patent Number	Issue Date (YYYY-MM-DD)	Application Number	Filing Date (YYYY-MM-DD)	Docket Number (if applicable)
6687625	2004-02-03	10127224	2002-04-22	D5491-57

CAUTION: Maintenance fee (and surcharge, if any) payment must correctly identify: (1) the patent number and (2) the application number of the actual U.S. application leading to issuance of that patent to ensure the fee(s) is/are associated with the correct patent. 37 CFR 1.366(c) and (d).

SMALL ENTITY
☐ Patentee claims, or has previously claimed, small entity status. See 37 CFR 1.27.

LOSS OF ENTITLEMENT TO SMALL ENTITY STATUS
☒ Patentee is no longer entitled to small entity status. See 37 CFR 1.27(g)

NOT Small Entity		Small Entity	
Fee	Code	Fee	Code
◉ 3 ½ year	(1551)	○ 3 ½ year	(2551)
○ 7 ½ year	(1552)	○ 7 ½ year	(2552)
○ 11 ½ year	(1553)	○ 11 ½ year	(2553)

SURCHARGE
The surcharge required by 37 CFR 1.20(i)(2) (Fee Code 1558) must be paid as a condition of accepting unintentionally delayed payment of the maintenance fee.

MAINTENANCE FEE (37 CFR 1.20(e)-(g))
The appropriate maintenance fee must be submitted with this petition.

STATEMENT
THE UNDERSIGNED CERTIFIES THAT THE DELAY IN PAYMENT OF THE MAINTENANCE FEE TO THIS PATENT WAS UNINTENTIONAL

PETITIONER(S) REQUEST THAT THE DELAYED PAYMENT OF THE MAINTENANCE FEE BE ACCEPTED AND THE PATENT REINSTATED

THIS PORTION MUST BE COMPLETED BY THE SIGNATORY OR SIGNATORIES

37 CFR 1.378(d) states: "Any petition under this section must be signed by an attorney or agent registered to practice before the Patent and Trademark Office, or by the patentee, the assignee, or other party in interest."

I certify, in accordance with 37 CFR 1.4(d)(4) that I am

◉ An attorney or agent registered to practice before the Patent and Trademark Office

○ A sole patentee

○ A joint patentee; I certify that I am authorized to sign this submission on behalf of all the other patentees.

○ A joint patentee; all of whom are signing this e-petition

○ The assignee of record of the entire interest

Patent Practitioner			
A signature of the applicant or representative is required in accordance with 37 CFR 1.33 and 10.18. Please see 37 CFR 1.4(d) for the form of the signature			
Signature	/RichardRedano/	Date (YYYY-MM-DD)	2008-03-03
Name	Richard T. Redano	Registration Number	32292

This collection of information is required by 37 CFR 1.378(c). The information is required to obtain or retain a benefit by the public which is to file (and by the USPTO to process) an application. Confidentiality is governed by 35 U.S.C. 122 and 37 CFR 1.11 and 1.14. This collection is estimated to take 1 hour to complete, including gathering, preparing, and submitting the completed application form to the USPTO. Time will vary depending upon the individual case. Any comments on the amount of time you require to complete this form and/ or suggestions for reducing this burden, should be sent to the Chief Information Officer, U.S. Patent and Trademark Office, U.S. Department of Commerce, P.O. Box 1450, Alexandria, VA 22313-1450. DO NOT SEND FEES OR COMPLETED FORMS TO THIS ADDRESS. **This form can only be used when in conjunction with EFS-Web. If this form is mailed to the USPTO, it may cause delays in reinstating the patent.**

Privacy Act Statement

The Privacy Act of 1974 (P.L. 93-579) requires that you be given certain information in connection with your submission of the attached form related to a patent application or patent. Accordingly, pursuant to the requirements of the Act, please be advised that: (1) the general authority for the collection of this information is 35 U.S.C. 2(b)(2); (2) furnishing of the information solicited is voluntary; and (3) the principal purpose for which the information is used by the U.S. Patent and Trademark Office is to process and/or examine your submission related to a patent application or patent. If you do not furnish the requested information, the U.S. Patent and Trademark Office may not be able to process and/or examine your submission, which may result in termination of proceedings or abandonment of the application or expiration of the patent.

The information provided by you in this form will be subject to the following routine uses:

1. The information on this form will be treated confidentially to the extent allowed under the Freedom of Information Act (5 U.S.C. 552) and the Privacy Act (5 U.S.C. 552a). Records from this system of records may be disclosed to the Department of Justice to determine whether the Freedom of Information Act requires disclosure of these record s.

2. A record from this system of records may be disclosed, as a routine use, in the course of presenting evidence to a court, magistrate, or administrative tribunal, including disclosures to opposing counsel in the course of settlement negotiations.

3. A record in this system of records may be disclosed, as a routine use, to a Member of Congress submitting a request involving an individual, to whom the record pertains, when the individual has requested assistance from the Member with respect to the subject matter of the record.

4. A record in this system of records may be disclosed, as a routine use, to a contractor of the Agency having need for the information in order to perform a contract. Recipients of information shall be required to comply with the requirements of the Privacy Act of 1974, as amended, pursuant to 5 U.S.C. 552a(m).

5. A record related to an International Application filed under the Patent Cooperation Treaty in this system of records may be disclosed, as a routine use, to the International Bureau of the World Intellectual Property Organization, pursuant to the Patent Cooperation Treaty.

6. A record in this system of records may be disclosed, as a routine use, to another federal agency for purposes of National Security review (35 U.S.C. 181) and for review pursuant to the Atomic Energy Act (42 U.S.C. 218(c)).

7. A record from this system of records may be disclosed, as a routine use, to the Administrator, General Services, or his/her designee, during an inspection of records conducted by GSA as part of that agency's responsibility to recommend improvements in records management practices and programs, under authority of 44 U.S.C. 2904 and 2906. Such disclosure shall be made in accordance with the GSA regulations governing inspection of records for this purpose, and any other relevant (i.e., GSA or Commerce) directive. Such disclosure shall not be used to make determinations about individuals.

8. A record from this system of records may be disclosed, as a routine use, to the public after either publication of the application pursuant to 35 U.S.C. 122(b) or issuance of a patent pursuant to 35 U.S.C. 151. Further, a record may be disclosed, subject to the limitations of 37 CFR 1.14, as a routine use, to the public if the record was filed in an application which became abandoned or in which the proceedings were terminated and which application is referenced by either a published application, an application open to public inspections or an issued patent.

9. A record from this system of records may be disclosed, as a routine use, to a Federal, State, or local law enforcement agency, if the USPTO becomes aware of a violation or potential violation of law or regulation.

UNITED STATES PATENT AND TRADEMARK OFFICE

COMMISSIONER FOR PATENTS
UNITED STATES PATENT AND TRADEMARK OFFICE
WASHINGTON, D.C. 20231
www.uspto.gov

Paper No. 8

FISH & NEAVE
1251 AVENUE OF THE AMERICAS
50TH FLOOR
NEW YORK, NY 10020-1105

COPY MAILED

APR 25 2003

OFFICE OF PETITIONS

In re Application of	:
Joseph Sacerdote et al	:
Application No. 10/127,226	: DECISION NOTING JOINDER OF
Filed: April 19, 2002	: INVENTOR AND PETITION
For: ELECTRONIC ASSET	: UNDER 37 CFR 1.47(a) MOOT
ASSIGNMENT AND TRACKING	:

This is a decision on the petition under 37 CFR 1.47(a), filed December 23, 2002. Papers filed on January 15, 2003 included a Declaration signed by the previously nonsigning legal representative in compliance with 37 CFR 1.63.

In view of the joinder of the legal representative, further consideration under 37 CFR 1.47(a) is moot; this application does not have any rule 1.47(a) status and no such status should appear on the file wrapper. This application need not be returned to this office for any further consideration under 37 CFR 1.47(a).

After this decision is mailed, deposit account No. 06-1075 will be charged the fee for the petition under 37 CFR 1.47 ($130).

This application is being forwarded to the Office of Initial Patent Examination.

Inquiries related to this decision may be addressed to Wan Laymon at (703) 306-5685.

Frances Hicks

Frances Hicks
Lead Petitions Examiner
Office of Petitions
Office of the Deputy Commissioner
for Patent Examination Policy

UNITED STATES PATENT AND TRADEMARK OFFICE

Commissioner for Patents
United States Patent and Trademark Office
P.O. Box 1450
Alexandria, VA 22313-1450
www.uspto.gov

ROPES AND GRAY LLP
PATENT DOCKETING 39/361
1211 AVENUE OF THE AMERICAS
NEW YORK, NY 10036-8704

COPY MAILED

MAY 30 2008

OFFICE OF PETITIONS

In re Application of	:	
Jason WIENER, et al	:	
Application No. 10/127,226	:	DECISION ON PETITION
Filed: April 19, 2002	:	TO WITHDRAW
Attorney Docket No. 01-1042	:	FROM RECORD
	:	

This is a decision on the Request to Withdraw as attorney or agent of record under 37 C.F.R. § 1.36(b), filed February 19, 2008.

The request is **DISMISSED** as moot.

A review of the file record indicates that the power of attorney to Ropes & Gray LLP, has been revoked by the assignee of the patent application on April 23, 2008. Accordingly, the request to withdraw under 37 C.F.R. § 1.36(b) is moot.

The correspondence address of record has been changed and the new correspondence address is the address indicated below.

Telephone inquires concerning this decision should be directed to undersigned at 571-272- 6735.

Diane Goodwyn
Petitions Examiner
Office of Petitions

cc: DEAN P. ALDERUCCI
CANTOR FITZGERALD, L.P.
110 EAST 59TH STREET (6TH FLOOR)
NEW YORK, NY 10022

UNITED STATES PATENT AND TRADEMARK OFFICE

Commissioner for Patents
United States Patent and Trademark Office
P.O. Box 1450
Alexandria, VA 22313-1450
www.uspto.gov

DEAN P. ALDERUCCI
CANTOR FITZGERALD, L.P.
110 EAST 59TH STREET (6TH FLOOR)
NEW YORK NY 10022

COPY MAILED

OCT 01 2009

OFFICE OF PETITIONS

In re Application of :
Jason Wiener et al. :
Application No. 10/127,226 : ON PETITION
Filed: April 19, 2002 :
Attorney Docket No. **01-1042** :

This is a decision on the petition under the unintentional provisions of 37 CFR 1.137(b), filed August 24, 2009, to revive the above-identified application.

The petition is **GRANTED**.

This application became abandoned as a result of petitioner's failure to file an appeal brief (and fee required by 37 CFR 41.20(b)(2)) within the time period provided in 37 CFR 41.37(a)(1). As an appeal brief (and appeal brief fee) was not filed within one (1) month of the Notice of Panel Decision from Pre-Appeal Brief Review (Notice) mailed November 26, and no extensions of time under the provisions of 37 CFR 1.136(a) were obtained, the appeal was dismissed and the proceedings as to the rejected claims were terminated. See 37 CFR 1.197(b). As no claim was allowed, the application became abandoned on December 27, 2008. *See* MPEP 1215.04.

The petition satisfies the requirements of 37 CFR 1.137(b) in that petitioner has supplied (1) the reply in the form of a Request for Continued Examination (RCE) and fee of $810, and the submission required by 37 CFR 1.114; (2) the petition fee of $1,620; and (3) a proper statement of unintentional delay.

Telephone inquiries concerning this decision should be directed to the JoAnne Burke at (571)272-4584.

This application is being referred to Technology Center AU 3696 for processing of the RCE and for appropriate action by the Examiner in the normal course of business on the amendment submitted in accordance with 37 CFR 1.114.

Ramesh Krishnamurthy

Ramesh Krishnamurthy
Petitions Examiner
Office of Petitions

UNITED STATES PATENT AND TRADEMARK OFFICE

Commissioner for Patents
United States Patent and Trademark Office
P.O. Box 1450
Alexandria, VA 22313-1450
www.uspto.gov

KNOBBE MARTENS OLSON & BEAR LLP
2040 MAIN STREET
FOURTEENTH FLOOR
IRVINE CA 92614

COPY MAILED

NOV 1 5 2005

OFFICE OF PETITIONS

In re Application of	:	
Neal L. EIGLER et al.	:	
Application No. 10/127,227	:	DECISION ON PETITION
Filed: April 19, 2002	:	UNDER 37 CFR 1.78(a)(3)
Attorney Docket No. SAVCOR.001C2	:	

This is a decision on the petition under 37 CFR 1.78(a)(3), filed September 6, 2005, to accept an unintentionally delayed claim under 35 U.S.C. § 120 for the benefit of priority to the prior-filed nonprovisional applications set forth in the amendment filed with the petition.

The petition is **GRANTED**.

A petition for acceptance of a claim for late priority under 37 CFR 1.78(a)(3) is only applicable to those applications filed on or after November 29, 2000. Further, the petition is appropriate only after the expiration of the period specified in 37 CFR 1.78(a)(2)(ii). In addition, the petition under 37 CFR 1.78(a)(3) must be accompanied by:

(1) the reference required by 35 U.S.C. § 120 and 37 CFR 1.78(a)(2)(i) of the prior-filed application, unless previously submitted;
(2) the surcharge set forth in § 1.17(t); and
(3) a statement that the entire delay between the date the claim was due under 37 CFR 1.78(a)(2)(ii) and the date the claim was filed was unintentional. The Commissioner may require additional information where there is a question whether the delay was unintentional.

All the above requirements having been satisfied, the late claim for priority under 35 U.S.C. § 120 is accepted as being unintentionally delayed.

The granting of the petition to accept the delayed benefit claim to the prior-filed applications under 37 CFR 1.78(a)(3) should not be construed as meaning that this application is entitled to the benefit of the prior-filed applications. In order for this application to be entitled to the benefit of the prior-filed applications, all other requirements under 35 U.S.C. § 120 and 37 CFR 1.78(a)(1) and (a)(2) must be met. Similarly, the fact that the corrected Filing Receipt

accompanying this decision on petition includes the prior-filed applications should not be construed as meaning that applicant is entitled to the claim for benefit of priority to the prior-filed applications noted thereon. Accordingly, the examiner will, in due course, consider this benefit claim and determine whether the application is entitled to the benefit of the earlier filing date.

A corrected Filing Receipt, which includes the priority claim to the prior-filed nonprovisional applications, accompanies this decision on petition.

Any inquiries concerning this decision may be directed to David Bucci at (571) 272-7099. All other inquiries concerning either the examination procedures or status of the application should be directed to the Technology Center.

This application is being forwarded to Technology Center Art Unit 3736 for appropriate action on the amendment filed September 6, 2005, including consideration by the examiner of applicant's entitlement to claim benefit of priority under 35 U.S.C. § 120 to the prior-filed applications.

Brian Hearn
Petitions Examiner
Office of Petitions

ATTACHMENT: Corrected Filing Receipt

UNITED STATES PATENT AND TRADEMARK OFFICE

COMMISSIONER FOR PATENTS
UNITED STATES PATENT AND TRADEMARK OFFICE
P.O. BOX 1450
ALEXANDRIA, VA 22313-1450
WWW.USPTO.GOV

Paper No. 7

HALE AND DORR LLP
60 STATE STREET
BOSTON MA 02109

COPY MAILED

MAY 0 2 2003

OFFICE OF PETITIONS

In re Application of :
Ronald Thomas Treggiden :
Application No. 10/127,240 : DECISION REFUSING STATUS
Filed: April 22, 2002 : UNDER 37 CFR 1.47(b)
Attorney Docket No. 100843-124US2 :

This is in response to the petition under 37 CFR 1.47(b), filed November 19, 2002.

The petition under 37 CFR 1.47(b) is **DISMISSED**.

Rule 47 applicant is given TWO MONTHS from the mailing date of this decision to reply, correcting the below-noted deficiencies. Any reply should be entitled "Request for Reconsideration of Petition Under 37 CFR 1.47(b)," and should only address the deficiencies noted below, except that the reply may include an oath or declaration executed by the non-signing inventor. **Failure to respond will result in abandonment of the application.** Any extensions of time will be governed by 37 CFR 1.136(a).

The above-identified application was filed on April 22, 2002, without an executed oath or declaration. Accordingly, on May 16, 2002, applicant was mailed a "Notice to File Missing Parts of Nonprovisional Application - Filing Date Granted," requiring, *inter alia*, an executed oath or declaration and a surcharge for its late filing. This Notice set a two-month period for reply.

In reply, applicant filed the instant petition, and paid both the petition fee and the surcharge for late filing of the declaration. To make timely this reply, petitioner purchased a four month extension of time and included a Certificate of Mailing dated November 14, 2002. Accompanying the petition was a declaration executed by David Trossell, an officer of purported assignee Digital Interfaces, Limited, on behalf on non-signing inventor Ronald Thomas Treggiden.

A grantable petition under 37 CFR 1.47(b) requires: (1) proof that the non-signing inventor cannot be reached or refuses to sign the oath or declaration after having been presented with the application papers (specification, claims and drawings); (2) an acceptable oath or declaration in compliance with 37 CFR 1.63; (3) the petition fee; (4) a statement of the last known address of the non-signing inventor; (5) proof that the Rule 47(b) applicant has sufficient proprietary interest in the subject matter to justify the filing of the

application; and (6) proof of irreparable damage. The instant petition does not satisfy requirements (1) and (6).

As to requirement (1), applicant has not established that Treggiden has refused to sign the declaration. Applicant stated that "Treggiden now refuses to execute the inventor declaration." With regards to this, the Manual of Patent Examining Procedure states:

> When a refusal of the inventor to sign the application papers is alleged, the circumstances of the presentation of the application papers and of the refusal must be specified in a statement of facts by the person who presented the inventor with the application papers and/or to whom the refusal was made.[1]

Here, applicant has provided no information about the presentation of the application papers or inventor Treggiden's refusal. If Treggiden made an oral refusal to sign the declaration, that fact along with the time and place of the refusal must be stated. If Treggiden made a written refusal, a copy of the written refusal must be supplied.[2]

As to requirement (6), this requirement may be met by a statement that a filing date is necessary to preserve the rights of the party or to prevent irreparable damage.[3]

Further correspondence with respect to this matter should be addressed as follows:

By mail: Mail Stop Petitions
Commissioner for Patents
P.O. Box 1450
Alexandria VA 22313-1450

By FAX: (703) 308-6916
Attn: Office of Petitions

By hand: Crystal Plaza Four, Suite 3C23
2201 S. Clark Place
Arlington, VA

Telephone inquiries related to this decision may be directed to the undersigned at (703) 305-0272.

Cliff Congo
Petitions Attorney
Office of Petitions

---

[1] MPEP 409.03(d).

[2] See id.

[3] See MPEP 409.03(g).

UNITED STATES PATENT AND TRADEMARK OFFICE

COMMISSIONER FOR PATENTS
UNITED STATES PATENT AND TRADEMARK OFFICE
P.O. BOX 1450
ALEXANDRIA, VA 22313-1450
WWW.USPTO.GOV

Paper No. 9

HALE AND DORR LLP
60 STATE STREET
BOSTON MA 02109

COPY MAILED

JUN 2 6 2003

OFFICE OF PETITIONS

In re Application of	:	
Ronald Thomas Treggiden	:	
Application No. 10/127,240	:	DECISION NOTING JOINDER
Filed: April 22, 2002	:	OF INVENTOR AND PETITION
Attorney Docket No. 100843-124US2	:	UNDER 37 CFR 1.47(b) MOOT

This is in response to the "Response to Decision Refusing Status Under 37 CFR 1.47(b)", filed June 20, 2003 (Certificate of Mailing dated June 17, 2003).

The above-identified application was filed on April 22, 2002, without an executed oath or declaration. Accordingly, on May 16, 2002, applicant was mailed a "Notice to File Missing Parts of Nonprovisional Application - Filing Date Granted," requiring, *inter alia*, an executed oath or declaration and a surcharge for its late filing. This Notice set a two-month period for reply.

In reply, applicant filed a petition under 37 CFR 1.47(b) on November 19, 2002, and paid both the petition fee and the surcharge for late filing of the declaration. To make timely this reply, petitioner purchased a four month extension of time and included a Certificate of Mailing dated November 14, 2002. Accompanying the petition was a declaration executed by David Trossell, an officer of purported assignee Digital Interfaces, Limited, on behalf on non-signing inventor Ronald Thomas Treggiden. However, the petition was dismissed in a decision mailed on May 2, 2002.

On renewed petition, petitioner has submitted a declaration executed by inventor Treggiden. The declaration has been found to be in compliance with 37 CFR 1.63.

In view of the **joinder** of the inventor, further consideration under 37 CFR 1.47(b) is not necessary and the petition is considered to be **moot**. This application does <u>not</u> have any Rule 1.47(b) status and no such status should appear on the file wrapper. This application need not be returned to this Office for further consideration under 37 CFR 1.47(b).

The application is being forwarded to the Office of Initial Patent Examination for preexamination processing.

Telephone inquiries concerning this decision should be directed to the undersigned at (703) 305-0272.

Cliff Congo
Petitions Attorney
Office of Petitions

UNITED STATES PATENT AND TRADEMARK OFFICE

Commissioner for Patents
United States Patent and Trademark Office
P.O. Box 1450
Alexandria, VA 22313-1450
www.uspto.gov

ANTHONY EDW. J CAMPBELL
PO BOX 160370
AUSTIN, TX 78716

COPY MAILED

DEC 28 2004

OFFICE OF PETITIONS

In re Application of :
Raymond F. Thompson :
Application No. 10/127,270 : ON PETITION
Filed: April 22, 2002 :
Attorney Docket No. TKG3466 :

This is a decision on the petition under 37 CFR 1.137(b), filed October 27, 2004, to revive the above-identified application.

The petition is GRANTED.

The above-identified application became abandoned for failure to submit the issue fee in a timely manner in reply to the Notice of Allowance mailed March 3, 2004, which set a statutory period for reply of three (3) months. Accordingly, the above-identified application became abandoned on June 4, 2004.

There is no indication that petitioner has submitted an Issue Fee Transmittal Form (PTOL-85b). Accordingly, if petitioner desires to have the information normally found thereon printed on the patent, the attached blank Issue Fee Transmittal Form should be completed and returned to the Publishing Division within ONE MONTH from the mail date of this decision.

The file does not indicate a change of address has been submitted, although the address given on the petition differs from the address of record. If appropriate, a change of address should be filed in accordance with MPEP 601.03. A courtesy copy of this decision is being mailed to the address given on the petition; however, the Office will mail all future correspondence solely to the address of record.

Telephone inquiries concerning this decision should be directed to Wan Laymon at (571) 272-3220.

This matter is being referred to Publishing Division.

Wan Laymon
Petitions Examiner
Office of Petitions
Office of the Deputy Commissioner
for Patent Examination Policy

Attachment: PTOL-85(b)

cc: RAYMOND F. THOMPSON
9289 CRYSTAL SPRING DRIVE
CONROE, TX 77303

JAN 2 7 2005 JC16 PATENT & TRADEMARK OFFICE

UNITED STATES PATENT AND TRADEMARK OFFICE

Commissioner for Patents
United States Patent and Trademark Office
P.O. Box 1450
Alexandria, VA 22313-1450
www.uspto.gov

JAN 2 7 2005 JC16 PATENT & TRADEMARK OFFICE

ANTHONY EDW. J CAMPBELL
PO BOX 160370
AUSTIN, TX 78716

COPY MAILED

DEC 2 8 2004

OFFICE OF PETITIONS

ON PETITION

In re Application of
Raymond F. Thompson
Application No. 10/127,270
Filed: April 22, 2002
Attorney Docket No. TKG3466

BEST AVAILABLE COPY

This is a decision on the petition under 37 CFR 1.137(b), filed October 27, 2004, to revive the above-identified application.

The petition is GRANTED.

The above-identified application became abandoned for failure to submit the issue fee in a timely manner in reply to the Notice of Allowance mailed March 3, 2004, which set a statutory period for reply of three (3) months. Accordingly, the above-identified application became abandoned on June 4, 2004.

There is no indication that petitioner has submitted an Issue Fee Transmittal Form (PTOL-85b). Accordingly, if petitioner desires to have the information normally found thereon printed on the patent, the attached blank Issue Fee Transmittal Form should be completed and returned to the Publishing Division within ONE MONTH from the mail date of this decision.

The file does not indicate a change of address has been submitted, although the address given on the petition differs from the address of record. If appropriate, a change of address should be filed in accordance with MPEP 601.03. A courtesy copy of this decision is being mailed to the address given on the petition; however, the Office will mail all future correspondence solely to the address of record.

Telephone inquiries concerning this decision should be directed to Wan Laymon at (571) 272-3220.

UNITED STATES PATENT AND TRADEMARK OFFICE

Commissioner for Patents
United States Patent and Trademark Office
P.O. Box 1450
Alexandria, VA 22313-1450
www.uspto.gov

BIJAN K. AMINI
1700 ROCKVILLE PIKE
SUITE 400
ROCKVILLE, MD 20852

COPY MAILED

MAY 2 0 2005

OFFICE OF PETITIONS

In re Application of :
Bijan K. Amini :
Application No. 10/127,295 :
Filed: April 22, 2002 :
Attorney Docket No. EMT-21 :

ON PETITION

This is a decision on the petition under 37 CFR 1.137(b), filed October 22, 2004, to revive the above-identified application.

The petition is **GRANTED.**

The above-identified application became abandoned for failure to submit the issue fee in a timely manner in reply to the Notice of Allowance mailed August 5, 2003, which set a statutory period for reply of three (3) months. Accordingly, the above-identified application became abandoned on November 6, 2003.

The petition satisfies the conditions for revival pursuant to the provisions of 37 CFR 1.137(b) in that (1) the reply in the form of payment of the issue fee; (2) the petition and publication fees; and (3) the required statement of unintentional delay have been received. Accordingly, the issue fee is accepted as having been unintentionally delayed.

There is no indication that the petitioner has submitted an Issue Fee Transmittal Form (PTOL-85b). Accordingly, if petitioner desires to have the information normally found thereon printed on the patent, the attached blank Issue Fee Transmittal Form should be completed and returned to the Publishing Division, Box Issue Fee, within **ONE MONTH** from the mail date of this decision.

The Change of Correspondence Address has been accepted and recorded.

Telephone inquiries concerning this decision should be directed to the undersigned at (571) 272-3229.

This application file is being forwarded to the Publishing Division for further processing.

Retta Williams

Retta Williams
Petitions Examiner
Office of Petitions
Office of the Deputy Commissioner
for Patent Examination Policy

Attachment: Blank Issue Fee Transmittal Form (PTOL-85b)

UNITED STATES PATENT AND TRADEMARK OFFICE

IFW

OIPE JC130
MAY 27 2005
PATENT & TRADEMARK OFFICE

Commissioner for Patents
United States Patent and Trademark Office
P.O. Box 1450
Alexandria, VA 22313-1450
www.uspto.gov

BIJAN K. AMINI
1700 ROCKVILLE PIKE
SUITE 400
ROCKVILLE, MD 20852

COPY MAILED

MAY 20 2005

OFFICE OF PETITIONS

In re Application of :
Bijan K. Amini :
Application No. 10/127,295 : ON PETITION
Filed: April 22, 2002 :
Attorney Docket No. EMT-21 :

This is a decision on the petition under 37 CFR 1.137(b), filed October 22, 2004, to revive the above-identified application.

The petition is **GRANTED.**

The above-identified application became abandoned for failure to submit the issue fee in a timely manner in reply to the Notice of Allowance mailed August 5, 2003, which set a statutory period for reply of three (3) months. Accordingly, the above-identified application became abandoned on November 6, 2003.

The petition satisfies the conditions for revival pursuant to the provisions of 37 CFR 1.137(b) in that (1) the reply in the form of payment of the issue fee; (2) the petition and publication fees; and (3) the required statement of unintentional delay have been received. Accordingly, the issue fee is accepted as having been unintentionally delayed.

There is no indication that the petitioner has submitted an Issue Fee Transmittal Form (PTOL-85b). Accordingly, if petitioner desires to have the information normally found thereon printed on the patent, the attached blank Issue Fee Transmittal Form should be completed and returned to the Publishing Division, Box Issue Fee, within **ONE MONTH** from the mail date of this decision.

The Change of Correspondence Address has been accepted and recorded.

Telephone inquiries concerning this decision should be directed to the undersigned at (571) 272-3229.

This application file is being forwarded to the Publishing Division for further processing.

Retta Williams

Retta Williams
Petitions Examiner
Office of Petitions
Office of the Deputy Commissioner
for Patent Examination Policy

RECEIVED
MAY 31 2005
OIPE/JCWS

Attachment: Blank Issue Fee Transmittal Form (PTOL-85b)

PART B - FEE(S) TRANSMITTAL

Complete and send this form, together with applicable fee(s), to: Mail Box ISSUE FEE
Commissioner for Patents
Washington, D.C. 20231
Fax (703)746-4000

INSTRUCTIONS: This form should be used for transmitting the ISSUE FEE and PUBLICATION FEE (if required). Blocks 1 through 4 should be completed where appropriate. All further correspondence including the Patent, advance orders and notification of maintenance fees will be mailed to the current correspondence address as indicated unless corrected below or directed otherwise in Block 1, by (a) specifying a new correspondence address; and/or (b) indicating a separate "FEE ADDRESS" for maintenance fee notifications.

CURRENT CORRESPONDENCE ADDRESS (Note: Legibly mark-up with any corrections or use Block 1)

OIPE JC130
MAY 27 2005
PATENT & TRADEMARK OFFICE

Note: A certificate of mailing can only be used for domestic mailings of the Fee(s) Transmittal. This certificate cannot be used for any other accompanying papers. Each additional paper, such as an assignment or formal drawing, must have its own certificate of mailing or transmission.

Certificate of Mailing or Transmission

I hereby certify that this Fee(s) Transmittal is being deposited with the United States Postal Service with sufficient postage for first class mail in an envelope addressed to the Box Issue Fee address above, or being facsimile transmitted to the USPTO, on the date indicated below.

(Depositor's name)

(Signature)

(Date)

APPLICATION NO.	FILING DATE	FIRST NAMED INVENTOR	ATTORNEY DOCKET NO.	CONFIRMATION NO.

APPLN. TYPE	SMALL ENTITY	ISSUE FEE	PUBLICATION FEE	TOTAL FEE(S) DUE	DATE DUE

EXAMINER	ART UNIT	CLASS-SUBCLASS

1. Change of correspondence address or indication of "Fee Address" (37 CFR 1.363).

❑ Change of correspondence address (or Change of Correspondence Address form PTO/SB/122) attached.

❑ "Fee Address" indication (or "Fee Address" Indication form PTO/SB/47; Rev 03-02 or more recent) attached. **Use of a Customer Number is required.**

2. For printing on the patent front page, list (1) the names of up to 3 registered patent attorneys or agents OR, alternatively, (2) the name of a single firm (having as a member a registered attorney or agent) and the names of up to 2 registered patent attorneys or agents. If no name is listed, no name will be printed.

1_____

2_____

3_____

3. ASSIGNEE NAME AND RESIDENCE DATA TO BE PRINTED ON THE PATENT (print or type)

PLEASE NOTE: Unless an assignee is identified below, no assignee data will appear on the patent. Inclusion of assignee data is only appropriate when an assignment has been previously submitted to the USPTO or is being submitted under separate cover. Completion of this form is NOT a substitute for filing an assignment.

(A) NAME OF ASSIGNEE (B) RESIDENCE: (CITY and STATE OR COUNTRY)

Please check the appropriate assignee category or categories (will not be printed on the patent) ❑ individual ❑ corporation or other private group entity ❑ government

4a. The following fee(s) are enclosed:

❑ Issue Fee

❑ Publication Fee

❑ Advance Order - # of Copies _____

4b. Payment of Fee(s):

❑ A check in the amount of the fee(s) is enclosed.

❑ Payment by credit card. Form PTO-2038 is attached.

❑ The Commissioner is hereby authorized by charge the required fee(s), or credit any overpayment, to Deposit Account Number _____(enclose an extra copy of this form).

Commissioner for Patents is requested to apply the Issue Fee and Publication Fee (if any) or to re-apply any previously paid issue fee to the application identified above.

(Authorized Signature) (Date)

NOTE; The Issue Fee and Publication Fee (if required) will not be accepted from anyone other than the applicant; a registered attorney or agent; or the assignee or other party in interest as shown by the records of the United States Patent and Trademark Office.

This collection of information is required by 37 CFR 1.311. The information is required to obtain or retain a benefit by the public which is to file (and by the USPTO to process) an application. Confidentiality is governed by 35 U.S.C. 122 and 37 CFR 1.14. This collection is estimated to take 12 minutes to complete, including gathering, preparing, and submitting the completed application form to the USPTO. Time will vary depending upon the individual case. Any comments on the amount of time you require to complete this form and/or suggestions for reducing this burden, should be sent to the Chief Information Officer, U.S. Patent and Trademark Office, U.S. Department of Commerce, Washington, D.C. 20231. DO NOT SEND FEES OR COMPLETED FORMS TO THIS ADDRESS. SEND TO: Commissioner for Patents, Washington, DC 20231.

Under the Paperwork Reduction Act of 1995, no persons are required to respond to a collection of information unless it displays a valid OMB control number.

TRANSMIT THIS FORM WITH FEE(S)

UNITED STATES PATENT AND TRADEMARK OFFICE

COMMISSIONER FOR PATENTS
UNITED STATES PATENT AND TRADEMARK OFFICE
P.O. BOX 1450
ALEXANDRIA, VA 22313-1450
www.uspto.gov

Paper No. 11

RYNDAK & SURI
Suite 2630
30 N. LaSalle Street
Chicago IL 60602

COPY MAILED

OCT 2 4 2003

OFFICE OF PETITIONS

In re Application of
Glenn Schackmuth, et al.
Application No. 10/127,309
Filed: April 22, 2002
Attorney Docket No. 25570-48227

DECISION GRANTING PETITION
UNDER 37 CFR 1.137(f)

This is a decision on the petition, filed October 6, 2003, to revive the instant nonprovisional application under the unintentional provisions of 37 CFR 1.137(f).

The petition is **GRANTED**.

Petitioner states that the instant nonprovisional application is the subject of an application filed in a foreign country on April 21, 2003. However, the U.S. Patent and Trademark Office was unintentionally not notified of this filing within 45 days subsequent to the filing of the subject application in a foreign country.

In view of the above, this application became abandoned pursuant to 35 U.S.C. § 122(b)(2)(B)(iii) and 37 CFR 1.213(c) for failure to timely notify the Office of the filing of an application in a foreign country, or under a multilateral international agreement, that requires publication of applications 18 months after filing.

A petition under 37 CFR 1.137(f) must be accompanied by:

(1) the reply which is met by the notification of such filing in a foreign country or under a multinational treaty;

(2) the petition fee as set forth in 37 CFR 1.17(m); and

(3) a statement that the entire delay in filing the required reply from the due date of the reply until the filing of a grantable petition was unintentional.

The instant petition has been found to be in compliance with 37 CFR 1.137(f). Accordingly, the failure to timely notify the Office of a foreign or international filing within 45 days after the date of filing of such foreign or international application as provided by 35 U.S.C. § 122(b)(2)(B)(iii) and 37 CFR 1.213(c) is accepted as having been unintentionally delayed.

Any inquiries concerning this decision may be directed to the undersigned at (703) 305-9220.

This application is being forwarded to Technology Center Art Unit 3721 to await a reply to the final Office action mailed September 12, 2003. Failure to timely reply to the September 12, 2003 Office action will again result in the abandonment of the application.

Sherry D. Brinkley
Petitions Examiner
Office of Petitions
Office of the Deputy Commissioner
for Patent Examination Policy

Conferee: Frances M. Hicks
Lead, Petitions Examiner

SPE: R. Rada

SPE RESPONSE FOR CERTIFICATE OF CORRECTION

Paper No.: 06212006

DATE : 6/15/06

TO SPE OF : ART UNIT 3721

SUBJECT : Request for Certificate of Correction for Appl. No.: 10/127,309 Patent No.: 6960157

Please respond to this request for a certificate of correction within 7 days.

Please review the requested changes/corrections as shown in the **COCIN** document(s) in the IFW application image. No new matter should be introduced, nor should the scope or meaning of the claims be changed.

Please complete the response (see below) and forward the completed response to scanning using document code **COCX**.

Lamonte M. Newsome
Certificates of Correction Branch
703-308-9390 ext. 112

Thank You For Your Assistance

The request for issuing the above-identified correction(s) is hereby:

Note your decision on the appropriate box.

- [X] **Approved** — All changes apply.
- [ ] **Approved in Part** — Specify below which changes **do not** apply.
- [ ] **Denied** — State the reasons for denial below.

Comments: _____

Rinaldi I. Rada
Supervisory Patent Examiner
SPE Group 3700 Art Unit 3721

UNITED STATES PATENT AND TRADEMARK OFFICE

Commissioner for Patents
United States Patent and Trademark Office
P.O. Box 1450
Alexandria, VA 22313-1450
www.uspto.gov

Paper No. 3

Baker Botts, LLP
910 Louisiana
Houston, TX 77002-4995

MAILED

SEP 0 7 2004

Technology Center 2100

In re Application of:
Terry P. LINDSEY
Application No. 10/127,315
Filed: April 22, 2002
For: APPARATUS AND METHOD FOR MODELING, STORING WITHIN A DATABASE, SERVICES ON A TELECOMMUNICATION NETWORK

DECISION ON REQUEST TO WITHDRAW AS ATTORNEY OR AGENT

This is a decision on the Request to Withdraw from Representation filed July 8, 2004.

A grantable request to withdraw as attorney of record should indicate thereon the present mailing addresses of the attorney(s) who is/are withdrawing from the record and of the applicant. The request for withdrawal must be signed by every attorney seeking to withdraw or contain a clear indication that one attorney is signing on behalf of another/others. A request to withdraw will not be approved unless at least 30 (thirty) days would remain between the date of approval and the later of the expiration date of a time to file a response or the expiration date of the maximum time period which can be extended under 37 C.F.R. § 1.136(a). The effective date of withdrawal being the date of decision and not the date of request. See M.P.E.P. § 402.06. 37 C.F.R. § 1.36 **further requires that the applicant or patent owner be notified of the withdrawal of the attorney or agent.**

There is no indication that Applicant has been notified of the request for withdrawal. Accordingly, the request is **DENIED.**

All future communications from the Office will continue to be directed to the above-listed address until otherwise notified by applicant. This correspondence address is provided by the withdrawn attorney(s). Applicant is reminded of the obligation to promptly notify the Patent and Trademark Office (Office) of any change in correspondence address to ensure receipt of all communications from the Office.

Vincent N. Trans
Special Program Examiner
Technology Center 2100
Computer Architecture, Software, and
Information Security
703-305-9750

UNITED STATES PATENT AND TRADEMARK OFFICE

Commissioner for Patents
United States Patent and Trademark Office
P.O. Box 1450
Alexandria, VA 22313-1450
www.uspto.gov

Ronald L. Chichester
BAKER BOTTS, LLP
910 Louisiana
Houston, TX 77002-4995

MAILED

MAY 3 1 2005

Technology Center 2100

In re Application of:
Terry P. Lindsey
Application No. 10/127,315
Filed: April 22, 2002
For: APPARATUS AND METHOD FOR MODELING, AND STORING WITHIN A DATABASE, SERVICES ON A TELECOMMUNICATIONS NETWORK

DECISION ON REQUEST TO WITHDRAW AS ATTORNEY OR AGENT

This is a decision on the Request To Withdraw from Representation filed September 14, 2004.

A grantable request to withdraw as attorney of record should indicate thereon the present mailing addresses of the attorney(s) who is/are withdrawing from the record and of the applicant. The request for withdrawal must be signed by every attorney seeking to withdraw or contain a clear indication that one attorney is signing on behalf of another/others. A request to withdraw will not be approved unless at least 30 (thirty) days would remain between the date of approval and the later of the expiration date of a time to file a response or the expiration date of the maximum time period which can be extended under 37 C.F.R. § 1. 136(a). The effective date of withdrawal being the date of decision and not the date of request. See M.P.E.P. § 402.06. 37 C.F.R. § 1.36 further requires that the applicant or patent owner be notified of the withdrawal of the attorney or agent.

The request is **GRANTED**.

All future communications from the Office will be directed to the below-listed address until otherwise notified by applicant. This correspondence address is provided by the withdrawn attorney(s). Applicant is reminded of the obligation to promptly notify the Patent and Trademark Office (Office) of any change in correspondence address to ensure receipt of all communications from the Office.

for

Vincent N. Trans
Special Program Examiner
Technology Center 2100

cc: Timothy W. Walsh
1251 Avenue of Americas
New York, NY 10020-1104

UNITED STATES PATENT AND TRADEMARK OFFICE

Commissioner for Patents
United States Patent and Trademark Office
P.O. Box 1450
Alexandria, VA 22313-1450
www.uspto.gov

FISH & NEAVE IP GROUP
ROPES & GRAY LLP
1251 AVENUE OF THE AMERICAS FL C3
NEW YORK NY 10020-1105

COPY MAILED

OCT 24 2005

OFFICE OF PETITIONS

In re Application of	:	
Anita Diu-Hercend et al	:	
Application No. 10/127,324	:	ON PETITION
Filed: April 19, 2002	:	
Attorney Docket No. VPI/01-04US	:	

This is a decision on the petition, filed October 20, 2005, under 37 CFR 1.313(c)(2) to withdraw the above-identified application from issue after payment of the issue fee.

The petition is **GRANTED.**

The above-identified application is withdrawn from issue for consideration of a submission under 37 CFR 1.114 (request for continued examination). See 37 CFR 1.313(c)(2).

Petitioner is advised that the issue fee paid on August 5, 2005 in the above-identified application cannot be refunded. If, however, the above-identified application is again allowed, petitioner may request that it be applied towards the issue fee required by the new Notice of Allowance.[1]

Telephone inquiries should be directed to the undersigned at (571) 272-3208.

The examiner of Technology Center AU 1623 will consider the request for continued examination under 37 CFR 1.114.

Karen Creasy

Karen Creasy
Petitions Examiner
Office of Petitions
Office of the Deputy Commissioner
for Patent Examination Policy

---

[1] The request to apply the issue fee to the new Notice may be satisfied by completing and returning the new Issue Fee Transmittal Form PTOL-85(b), which includes the following language thereon: "Commissioner for Patents is requested to apply the Issue Fee and Publication Fee (if any) or re-apply any previously paid issue fee to the application identified above." Petitioner is advised that, whether a fee is indicated as being due or not, the Issue Fee Transmittal Form **must** be completed and timely submitted to avoid abandonment. Note the language in bold text on the first page of the Notice of Allowance and Fee(s) Due (PTOL-85).

UNITED STATES PATENT AND TRADEMARK OFFICE

Commissioner for Patents
United States Patent and Trademark Office
P.O. Box 1450
Alexandria, VA 22313-1450
www.uspto.gov

January 29, 2007

Patrick J. O'Shea
O'SHEA, GETZ & KOSAKOWSKI, P.C.
1500 Main Street, Suite 912
Springfield, MA 01115

Patent No: 7124655 B2
Application No: 10/127334
Applicant: Lothar Blossfeld
Issued: October 24, 2006
Title: **TWO-WIRE SENSOR FOR MEASURING A PHYSICAL PARAMETER**

Request for Certificate Of Correction:

Consideration has been given to your request for the issuance of a certificate of correction for the above- identified patent under the provisions of Rule 1.322.

Inspection of the column 2, line 41, of the application for the above patent reveals that the error mentioned in your request is in fact printed in accordance with the record in the Patent and Trademark Office, as passed to issue by the examiner. There being no fault on the part of the Patent and Trademark Office, it has no authority to issue a certificate of correction under the provision of 1.322.

In view of the foregoing your request in this matter are hereby **denied**.

However, further consideration will be given to these matters, upon receipt of a request for certificate of correction under the provision of 1.323, accompanied by the appropriate fee, which is presently $100.

Virginia Tolbert
For Cecelia Newman, Supervisor
Decisions and Certificate of Correction
(703) 308-8309 or (703) 308-9390 ext. 113

vt

UNITED STATES PATENT AND TRADEMARK OFFICE

Commissioner for Patents
United States Patent and Trademark Office
P.O. Box 1450
Alexandria, VA 22313-1450
www.uspto.gov

NOV 21 2007

DAVID L. SIMON
P.O. BOX 618
MANSFIELD CENTER CT 06250

In re Application of	:
David Lew Simon	:
Serial No.: 10/127,359	: PETITION DECISION
Filed: April 22, 2002	:
Attorney Docket No.:	:

This is in response to the petition under 37 CFR 1.181, filed July 30, 2007, requesting entry of evidence in a revised Appeal Brief.

BACKGROUND

A review of the file history shows that extensive prosecution has gone on over several years and includes the filing of at least three RCE submissions, the last on January 12, 2006. Subsequent thereto, the examiner mailed a non-Final Office action to applicant on June 19, 2006, to which applicant replied on August 7, 2006. A new non-Final Office action was mailed on October 26, 2006, to which reply was made on February 15, 2007. A Notice of Appeal was also filed on February 15, 2007, concurrently with an Appeal Brief. The examiner mailed an Examiner's Answer to applicant on May 2, 2007, and applicant filed a Reply Brief on May 21, 2007.

On June 5, 2007, the Appeal Brief, Reply Brief and Examiner's answer were returned by the Board of Patent Appeals and Interferences as they did not conform to the format required. On June 15, 2007, a Notice of Defective Appeal Brief was mailed to applicant setting forth the deficiencies and requiring submission of a corrected Brief within one month, or as extended under 37 CFR 1.13(a). Applicant filed a corrected brief on August 2, 2007 (Certificate of Mailing dated July 30, 2007), and this petition.

Applicants filed this petition requesting that the new Appeal Brief be accepted and that applicant be permitted to enter new evidence into the Brief.

DISCUSSION

Applicant's initial Appeal Brief was found defective for several reasons. The Brief failed to provide a clean copy of the claims on Appeal, as required, nor was there any indication of evidence in the form of affidavits being relied on to support applicant's arguments. Also, copies of any decisions by the Board or a court in the related appeals and interferences section were not included.

In reply, applicant filed a new Appeal Brief attempting to address the noted deficiencies. Applicant provides a clean copy of the claims on appeal, including status identifiers which are not required in the Brief. Applicant also provides an "evidence appendix" which lists 51 documents. In addition, applicant provides an affidavit under 37 CFR 1.132 accompanied by an IDS listing 17 additional documents and requests that the affidavit and documents be considered by the examiner.

Applicant offers that he is *pro se* and, as indicated in 37 CFR 41.37(c)(1) need only substantially comply with the requirements therein and is therefore entitled to add new evidence in the Appeal and Appeal Brief. Applicant's argument is not fully understood and appears to be somewhat circuitous. 37 CFR 41.37(c)(1) clearly states that a Brief must contain items (i) through (x) and lists and explains those items with particularity. (Note also M.P.E.P. 1205.02.) The section then states that a *pro se* applicant need only substantially comply with the requirements of (i) through (iv) and (vii) through (x). These items relate to (i) real party in interest; (ii) related appeals; (iii) status of claims; (iv) status of amendments; (viii) claims appendix; (ix) evidence appendix; and (x) related proceedings appendix. Substantial compliance is interpreted to mean that the listed items are present, but may not be in the form preferred by the Board. For instance, a clean copy of the claims means a copy without claim identifiers. Substantial compliance would be a listing with claim identifiers. In like manner, substantial compliance with the evidence appendix would require a listing and copy of any item relied upon and is generally restricted to affidavits under 37 CFR 1.130, 1.131 and 1.132 and any references which are cited therein and which were of record during the prosecution of the application and have been considered by the examiner fully. 37 CFR 41.37(c)(2) specifically prohibits the inclusion of any new or non-admitted amendment affidavit or evidence in an Appeal Brief.

Applicant is apprised that the prosecution record of this application was closed upon applicant's filing of a Notice of Appeal and Appeal Brief. Subsequent thereto no new evidence, affidavits or other items pertinent to determination of patentability could be entered into the record unless such items placed the application in immediate condition for allowance. Applicant is apprised that the Board is a reviewing body only. It reviews the decision of the examiner/Office as to the correctness of a rejection of one or more claims examined by an examiner and based only on the evidence and references before the examiner during prosecution. To now submit an affidavit not previously seen by the examiner and request consideration thereof in the Examiner's Answer is prohibited, as noted *supra*..

Applicant's arguments notwithstanding, applicant is proscribed from having any new evidence or affidavits entered into the reviewable record after filing of an Appeal Brief. That applicant was required to file a second Appeal Brief to correct deficiencies and errors in format of the original

Appeal Brief is not considered permission to add to the record on which the Appeal is based. 37 CFR 41.33 does not excuse the late filing of evidence except in the sole instance in which such evidence places the application in immediate condition for allowance. Such instances are extremely rare. Nevertheless, the examiner will give cursory review to the affidavit and evidence submitted to determine if such is the case, and if so, allow the application.

DECISION

The petition is **DENIED**.

The Revised Appeal Brief filed August 2, 2007, has been entered as applicant's corrected Appeal Brief. The application will be forwarded to the examiner for further action.

Should there be any questions about this decision please contact William R. Dixon, Jr., by letter addressed to Director, TC 1600, at the address listed above, or by telephone at 571-272-0519 or by facsimile sent to the general Office facsimile number 571-273-8300.

Bruce M. Kisliuk
Director, Technology Center 1600

UNITED STATES PATENT AND TRADEMARK OFFICE

COMMISSIONER FOR PATENTS
UNITED STATES PATENT AND TRADEMARK OFFICE
P.O. BOX 1450
ALEXANDRIA, VA 22313-1450
WWW.USPTO.GOV

Paper No. 9

RYNDAK & SURI
Suite 2630
30 N. LaSalle Street
Chicago IL 60602

COPY MAILED
NOV 12 2003
OFFICE OF PETITIONS

In re Application of
Gerald A. Sus et al.
Application No. 10/127,369
Filed: April 22, 2002
Attorney Docket No. 25570-48184
Title: AUTOMATED DEVICE FOR PACKAGING FOOD

DECISION ON PETITION
UNDER 37 C.F.R. §1.137(f)

This is a decision on the petition filed on October 6, 2003, pursuant to 37 C.F.R. §1.137(f), to revive the above-identified application.

A grantable petition pursuant to 37 CFR 1.137(f) must be accompanied by:

(1) Notification of the filing of an application in a foreign country or under a multinational treaty that requires 18 month publication[1];
(2) The petition fee as set forth in 37 C.F.R. § 1.17(m), and;
(3) A statement that the entire delay in filing the notice from the date that the notice was due under 35 U.S.C. §122(b)(2)(B)(iii) until the date the notice was filed was unintentional. The Commissioner may require additional information where there is a question whether the delay was unintentional.

Petitioner states that the instant nonprovisional application is the subject of an application filed in either a foreign or an international application on April 21, 2003. However, the United States Patent and Trademark Office was unintentionally not notified of this filing within 45 days subsequent to the filing of the subject application in either an international application or a foreign country.

In view of the above, this application became abandoned pursuant to 35 U.S.C. §1.22(b)(2)(B)(iii) and 37 C.F.R. §1.213(c) for failure to timely notify the Office of the filing of

1 See PTO/SB/36 and paragraph on PTO/SB/64a for further information. Both may be downloaded at http://www.uspto.gov/web/forms/index.html.

either a foreign application or an application under a multilateral international agreement that requires publication of applications 18 months after filing.

The petition under 37 C.F.R. §1.137(f) is **GRANTED**.

Petitioner has submitted the notification of either a foreign or an international filing, paid the petition fee, and has made the proper statement of unintentional delay.

The instant petition has been found to be in compliance with 37 C.F.R. §1.137(f). Accordingly, the failure to timely notify the Office of a foreign or international filing within 45 days after the date of filing of such foreign or international application as provided by 35 U.S.C. §122(b)(2)(B)(iii) and 37 C.F.R. §1.213(c) is accepted as having been unintentionally delayed.

After this decision is mailed, the application will be forwarded to Technology Center 3700 for further processing.

Telephone inquiries concerning *this decision* should be directed to Attorney Paul Shanoski at (703) 305-0011.

Paul Shanoski
Attorney
Office of Petitions
United States Patent and Trademark Office

UNITED STATES PATENT AND TRADEMARK OFFICE

COMMISSIONER FOR PATENTS
UNITED STATES PATENT AND TRADEMARK OFFICE
P.O. BOX 1450
ALEXANDRIA, VA 22313-1450
www.uspto.gov

Paper No. 8

STEVEN FISHMAN, SCULLY, SCOTT
MURPHY & PRESSER
400 GARDEN CITY PLAZA
GARDEN CITY, NY 11530

COPY MAILED

FEB 20 2004

OFFICE OF PETITIONS

In re Application of
Hougham et al.
Application No. 10/127,375
Filed: April 22, 2002
Attorney Docket No. YOR920010652US1 (14841)

ON PETITION

This is a decision on the petition under 37 C.F.R. § 1.137(b), filed February 9, 2004, to revive the above-identified application.

The petition is **granted.**

The above-identified application became abandoned for failure to reply in a timely and proper manner to the Notice to File Corrected Application Papers (Notice) mailed May 29, 2002. The Notice set a period for reply of two (2) months from the mail date of the Notice. No extensions of time under the provisions of 37 CFR 1.136(a) were obtained. Accordingly, the above-identified application became abandoned on July 30, 2002. A Notice of Abandonment was mailed on January 20, 2004.

Petitioner has met the requirements to revive the above-identified application pursuant to 37 CFR 1.137(b).

The file is now being forwarded to the Office of Initial Patent Examination for further processing.

Telephone inquiries should be directed to the undersigned at (703) 306-0482.

Liana Chase
Petitions Examiner
Office of Petitions
Office of the Deputy Commissioner
for Patent Examination Policy

UNITED STATES PATENT AND TRADEMARK OFFICE

COMMISSIONER FOR PATENTS
UNITED STATES PATENT AND TRADEMARK OFFICE
P.O. BOX 1450
ALEXANDRIA, VA 22313-1450
www.uspto.gov

Paper No. 11

Ryndak & Suri
30 N. LaSalle Street, Suite 2630
Chicago IL 60602

COPY MAILED

DEC 23 2003

OFFICE OF PETITIONS

In re Application of
Sus et al.
Application No. 10/127,390
Filed: April 22, 2002
Attorney Docket No. 25570-48147

DECISION GRANTING PETITION
UNDER 37 CFR 1.137(b)

This is a decision on the petition, filed October 6, 2003, which is being treated as a petition under 37 CFR 1.137(b) to revive the instant nonprovisional application for failure to timely notify the U.S. Patent and Trademark (USPTO) of the filing of an application in a foreign country, or under a multinational treaty that requires publication of applications eighteen months after filing. *See* 37 CFR 1.137(f).

The petition is **GRANTED**.

Petitioner states that the present nonprovisional application is the subject of an application filed in an eighteen month publication country on April 21, 2003. However, the USPTO was unintentionally not notified of this filing within 45 days subsequent to the filing of the subject application in an eighteen month publication country.

In view of the above, this application became abandoned pursuant to 35 U.S.C. § 122(b)(2)(B)(iii) and 37 CFR 1.213(c) for failure to timely notify the Office of the filing of an application in a foreign country or under a multilateral international agreement that requires publication of applications 18 months after filing.

A petition to revive an application abandoned pursuant to 35 U.S.C. 122(b)(2)(B)(iii) for failure to notify the USPTO of a foreign filing must be accompanied by:

(1) the required reply which is met by the notification of such filing in a foreign country or under a multinational treaty;

(2) the petition fee as set forth in 37 CFR 1.17(m); and,

(3) a statement that the entire delay in filing the required reply from the due date of the reply until the filing of a grantable petition was unintentional.

The present petition has been found to be in compliance with 37 CFR 1.137(b). Accordingly, the failure to timely notify the

USPTO of a foreign or international filing within 45 days after the date of filing of such foreign or international application as provided by 35 U.S.C. § 122(b)(2)(B)(iii) and 37 CFR 1.213(c) is accepted as having been unintentionally delayed.

The previous Request and Certification under 35 U.S.C. § 122(b)(2)(B)(i) has been rescinded. Office records indicate that the application published on November 6, 2003.

This application is being forwarded to Technology Center Art Unit 3721.

Any inquiries concerning this decision may be directed to the undersigned at (703) 306-5589.

Christina Tartera Donnell

Christina Tartera Donnell
Senior Petitions Attorney
Office of Petitions