UNITED STATES PATENT AND TRADEMARK OFFICE

UNITED STATES DEPARTMENT OF COMMERCE
United States Patent and Trademark Office
Address: COMMISSIONER FOR PATENTS
P.O. Box 1450
Alexandria, Virginia 22313-1450
www.uspto.gov

APPLICATION NO.	FILING DATE	FIRST NAMED INVENTOR	ATTORNEY DOCKET NO.	CONFIRMATION NO.
10/152,251	05/20/2002	Marcus Felipe Fontoura	ARC920020018US1	4531

7590 12/28/2007

John L. Rogitz
Rogitz & Associates
Suite 3120
750 B Street
San Diego, CA 92101

EXAMINER
HU, JINSONG

ART UNIT	PAPER NUMBER
2154	

MAIL DATE	DELIVERY MODE
12/28/2007	PAPER

Please find below and/or attached an Office communication concerning this application or proceeding.

The time period for reply, if any, is set in the attached communication.

December 27, 2007

John L. Rogitz
Rogitz & Associates
Suite 3120
750 B Street
San Diego CA 92101

In re Application of: Fontoura et al.	)	
Application No. 10/152,251	)	**DECISION ON PETITION TO**
Attorney Docket No. **ARC920020018US1**	)	**CONTEST THE HOLDING OF**
Filed: May 20, 2002	)	**NONCOMPLIANCE OF APPLICANT'S**
For: **RULE-BASED METHOD AND SYSTEM FOR MANAGING HETEROGENOUS COMPUTER CLUSTERS**	)	**APPEAL BRIEF 37 CFR §1.181**

This is a decision on the petition filed January 12, 2007 under 37 C.F.R. §1.181 to contest the holding of noncompliance of Applicant's Appeal Brief.

The petition is **DISMISSED**.

In the Notification of Non-compliant Appeal Brief dated January 10, 2007, the examiner stated that the Appeal Brief is non-compliant because "The brief does not present an argument under a separate heading for each ground of rejection on appeal (37 CFR 41.37(c)(1)(vii))." and that the "Claims argued as a group should be placed under a subheading identifying the claims by number. A statement which merely points out what a claim recites will not be considered an argument for separate patentability of the claim."

Applicant argued, in their petition, that
Point (1): "MPEP §1205.02(vii) ("Argument") uses mandatory languages once and only once – in the fourth full paragraph beginning at the third line of the first column of page 1200-15 (using Revision 5 of the MPEP, August, 2006). At this point, the MPEP mandates, using the word "must", that each ground of rejection (that is, each ground set forth in Section 6 of the appeal brief) "must" be treated under a separate heading. No form of the heading is mandated in this sentence, only that separate headings, one for each ground of rejection, just appear in Section 7. Appellant's repeated briefs have fully complied with this requirement, using various forms of headings including, for the Board's ease and convenience, letters paralleling those preceding the grounds of rejection in
Section 6 of the brief."

Point (2): "The remainder of MPEP §1205.02(vii) is altogether devoid of mandatory language. Instead, it is rife with advisory language the failure to comply with which by definition does not render a brief "non-compliant", since actionable non-compliance with guidance that is merely advisory is impossible. For instance, the MPEP advises that any claim argued separately "should', not "must", be placed under a separate heading identifying the claim by number, and that claims argued as a group "should", not "must", be placed under a subheading identifying the claims by number. Following this guidance, which the Patent Office has deliberately couched in non-binding advisory, not mandatory, verbs, are several example "possible" headings, further underscoring the advisory-only, non-binding nature of the remainder of this section of MPEP 1205.02. Indeed, the last sentence of this section of MPEP §1205.02 clarifies its

non-binding. "best practice" advisory nature, precisely as argued by Appellant.

Failure to adhere to guidance that the Patent Office has deliberately avoided couching in mandatory language does not translate into a defective brief; if the Patent Office wished to make the headings discussion in the MPEP mandatory, it could have used, but did not, mandatory language as it did elsewhere in the very same portion of the MPEP. By using the language it chose to use in MPEP 1205.02, the Patent Office has deliberately and clearly evinced an intent to give appellants discretion in the particular format of the headings. Accordingly, Appellant petitions for vacatur of the Notices as being improperly based on allegations of noncompliance with advisory, not mandatory, guidance."

Point (3): The second defect in the Notices requiring vacatur is the allegation that the brief is defective because "a statement which merely points out what a claim recites will not be considered an argument'. No such statements appear in the present brief. Under the mandatory heading (which Appellant, in the discretion allowed to it by the Patent Office in accordance with the discussion above to formulate its own heading format has labeled "b" to parallel ground "b" in Section 6 of the brief) it is argued that dependent claims inherit the patentability of their parent claims, but this of course is not remotely the same thing as the prohibited argument, namely, a statement which merely points out what a claim recites. Once again, reading comprehension is key.

As per points (2) and (3), the Petitioner's arguments are persuasive. However, as per point (1), the Petitioner's arguments are **not persuasive** and the Petitioner's Appeal Brief does not comply with (37 CFR 41.37(c)(1)(vii) and MPEP §1205.02(vii) ("Argument").

> 37 CFR 41.37(c)(1)(vii) states that "(vii)*Argument.* The contentions of appellant with respect to each ground of rejection presented for review in paragraph (c)(1)(vi) of this section, and the basis therefor, with citations of the statutes, regulations, authorities, and parts of the record relied on. Any arguments or authorities not included in the brief or a reply brief filed pursuant to § 41.41 will be refused consideration by the Board, unless good cause is shown. Each ground of rejection must be treated under a separate heading."

In section 6 of the Appeal Brief dated 10/21/06, Appellant has two grounds of rejection to be reviewed on Appeal which are:

> (a) Claims 1-3. 5-26 and 28-35 haw been rejcted under 35 U.S.C. §103 as being unpatentable over Freeman et al., USPN 6,922,724.
>
> (b) Claims 4 and 27 have been rejected under 35 U.S.C. § 103 as being unpatentable over Freeman et al in view of Laye et ai., USPP 2003/0120771.

Appellant has failed to set forth any type of argument with respect to rejection (b) to be reviewed for Appeal, in section (7) of the Appeal Brief. Arguments with respect to rejection (b) must be placed in section (7) of the Appeal Brief under a separate heading and if not argued then removed from section (6), so that the rejection is not reviewed on Appeal.

Accordingly, the Petition is **DISMISSED**.

Any request for reconsideration must be filed within two months of the mailing date of this decision.

Jeff Gaffin
2100 Group Director, Acting
Technology Center 2100
571-272-4150

UNITED STATES PATENT AND TRADEMARK OFFICE

UNITED STATES DEPARTMENT OF COMMERCE
United States Patent and Trademark Office
Address: COMMISSIONER FOR PATENTS
P.O. Box 1450
Alexandria, Virginia 22313-1450
www.uspto.gov

APPLICATION NO.	FILING DATE	FIRST NAMED INVENTOR	ATTORNEY DOCKET NO.	CONFIRMATION NO.
10/125,251	04/18/2002	Willi Parsch	34691/246468	1296

826 7590 09/22/2008
ALSTON & BIRD LLP
BANK OF AMERICA PLAZA
101 SOUTH TRYON STREET, SUITE 4000
CHARLOTTE, NC 28280-4000

EXAMINER
SOLAK, TIMOTHY P

ART UNIT	PAPER NUMBER
3746	

MAIL DATE	DELIVERY MODE
09/22/2008	PAPER

Please find below and/or attached an Office communication concerning this application or proceeding.

The time period for reply, if any, is set in the attached communication.

UNITED STATES PATENT AND TRADEMARK OFFICE

Commissioner for Patents
United States Patent and Trademark Office
P.O. Box 1450
Alexandria, VA 22313-1450
www.uspto.gov

MAILED

SEP 19 2008

TECHNOLOGY CENTER 2100

JOHN L. ROGITZ
ROGITZ & ASSOCIATES
SUITE 3120
750 B STREET
SAN DIEGO CA 92101

In re Application of: FONTOURA et al.)
Application No. 10/152,251)
Filed: May 20, 2002) **DECISION ON PETITION**
For: RULE-BASED METHOD AND SYSTEM FOR)
MANAGING HETEROGENOUS COMPUTER)
CLUSTERS

This is a decision on the petition filed on Jan 04, 2008, requesting reconsideration of the decision dated Dec 28, 2007. The Dec 28, 2007 decision dismisses the petition filed Jan 12, 2007 requesting vacatur of notice of non- compliant brief.

RELEVANT HISTORY

In the Appeal Brief dated Oct 21, 2006, Appellant indicates two grounds of rejection to be reviewed on appeal in section (6) of the Appeal Brief:

(a) Claims 1-3, 5-26 and 28-35 haw been rejected under 35 U.S.C. §103 as being unpatentable over Freeman et al., USPN 6,922,724.
(b) Claims 4 and 27 have been rejected under 35 U.S.C. § 103 as being unpatentable over Freeman et al in view of Laye et al., US PGPP 2003/0120771.

In section (7), the Appeal Brief contains the following statement:

(b) The defects of the rejections of the independent claims noted above carry over into the rejections under this section *and are incorporated by reference as if set out in their entirety.*

In the Notification of Non-compliant Appeal Brief dated Jan 10, 2007, the examiner states that the Appeal Brief is non-compliant in accordance with (37 CFR 41.37(c)(1)(vii) because:

The brief does not present an argument under a *separate heading* for each ground of rejection on appeal (37 CFR 41.37(c)(1)(vii)); and

> Claims argued as a group should be placed under a *subheading identifying the claims by number*. A statement which merely points out what a claim recites *will not be considered an argument* for separate patentability of the claim (emphasis added).

In the petition filed January 12, 2007 under 37 C.F.R. §1.181, petitioner contests the holding of Notification of Non-compliant Appeal Brief. Applicant argues the required format of the "heading" and substance of the "argument" of the Notification.

The decision dated Dec 28, 2007 states that the argument regarding the *format of the heading is persuasive*; however, dismisses the petition filed Jan 12, 2007 because:

> Appellant has *failed to set forth any type of argument with respect to rejection (b)* to be reviewed for Appeal, in section (7) of the Appeal Brief dated Jan 10, 2007. Arguments with respect to rejection (b) must be placed in section (7) of the Appeal Brief under a separate heading and *if not argued then removed from section (6), so that the rejection is not reviewed on Appeal* (emphasis added).

In the instant request for reconsideration, the petitioner asserts that statement (b) in section (7) of the Appeal Brief filed Oct 21, 2006 includes:

1) a <u>heading,</u> namely "b"; and
2) an <u>argument,</u> namely "The defects of the rejections of the independent claims noted above carry over into the rejections under this section and are incorporated by reference as if set out in their entirety".

DECISION

MPEP 1202.02 (vii) states:

> The appellant's contentions with respect to *each ground of rejection presented and the basis for those contentions*, including citations of authorities, statutes, and parts of the record relied on, <u>should be</u> presented in this section. A statement which merely points out what a claim recites will not be considered an argument for patentability of the claim.

37 CFR 41.37(c)(1) states:

> (vi) Grounds of rejection to be reviewed on appeal. A concise statement of each ground of rejection presented for review.
> (vii) Argument. The contentions of appellant with respect to each ground of rejection presented for review in paragraph (c)(1)(vi) of this section, and the basis therefor, with citations of the statutes,

> regulations, authorities, and parts of the record relied on. *Any arguments or authorities not included in the brief or a reply brief filed pursuant to § 41.41 will be refused consideration by the Board*, unless good cause is shown. Each ground of rejection must be treated under a separate heading. For each ground of rejection applying to two or more claims,...the failure of appellant to separately argue claims which appellant has grouped together shall constitute a waiver of any argument that the Board must consider the patentability of any grouped claim separately. Any claim argued separately should be placed under a subheading identifying the claim by number. Claims argued as a group should be placed under a subheading identifying the claims by number. *A statement which merely points out what a claim recites will not be considered an argument for separate patentability of the claim* (emphasis added).

The Appeal Brief filed Oct 21, 2006 includes the required heading "b" and the statement following the heading constitutes an "argument" rather that merely points out what the claims recite. Therefore, the Appeal Brief dated Oct 21, 2006 is in compliance with MPEP 1202.02 (vii) and 37 CFR 41.37(c)(1).

For the above stated reasons, the petition is **GRANTED**. The Notification of Non-complaint Appeal Brief mailed Jan 102007 is hereby vacated.

The application will be forwarded to examiner of record to consider the Appeal Brief filed on Oct 21 2006 for appropriate action.

Any inquiry concerning this decision should be directed to Kim Huynh whose telephone number is (571) 272-4147.

Andrew Hirshfeld, Director
Technology Center 2100
Computer Architecture, Software, and
Information Security

UNITED STATES PATENT AND TRADEMARK OFFICE

COMMISSIONER FOR PATENTS
UNITED STATES PATENT AND TRADEMARK OFFICE
P.O. BOX 1450
ALEXANDRIA, VA 22313-1450
www.uspto.gov

BLACKWELL SANDERS PEPER MARTIN
720 OLIVE STREET, SUITE 2400
ST. LOUIS, MO 63101

COPY MAILED

APR 1 3 2004

OFFICE OF PETITIONS

In re Application of
Jason William Tomcak et al
Application No. 10/152,264
Filed: May 21, 2002
Attorney Docket No. 717119.431

ON PETITION

This is a decision on the petition under 37 CFR 1.137(b), filed January 28, 2004, to revive the above-identified application.

The petition is **GRANTED**.

The above-identified application became abandoned for failure to reply within the meaning of 37 CFR 1.113 in a timely manner to the final Office action mailed July 9, 2003, which set a shortened statutory period for reply of three (3) months. A reply under 37 CFR 1.113 is limited to an amendment that *prima facie* places the application in condition for allowance, a Notice of Appeal (and appeal fee required by 37 CFR 1.17(b)), or a filing of a request for continued examination (RCE). Extensions of time under the provisions of 37 CFR 1.136(a) were obtained. Accordingly, the above-identified application became abandoned on December 10, 2003.

Telephone inquiries concerning this decision should be directed to Wan Laymon at (703) 305-9282.

The application file is being referred to Technology Center AU 3643 for processing of the request for continued examination (RCE) under 37 CFR 1.114 and the currently filed Amendment.

Wan Laymon
Petitions Examiner
Office of Petitions
Office of the Deputy Commissioner
for Patent Examination Policy

UNITED STATES PATENT AND TRADEMARK OFFICE

COMMISSIONER FOR PATENTS
UNITED STATES PATENT AND TRADEMARK OFFICE
WASHINGTON, D.C. 20231
www.uspto.gov

Paper No. 5

KING & SPALDING
191 Peachtree Street, N.E.
Atlanta, GA 30303-1763

MAIL

OCT 2 5 2002

DIRECTOR OFFICE
TECHNOLOGY CENTER 2100

In re Application of: Fergal Burke, et al.	)	
Application No. 10/152,269	)	
Filed: May 21, 2002	)	
For: METHOD AND SYSTEM FOR DESIGNING AND IMPLEMENTING SHAPES IN A SOFTWARE MODULE	)	**DECISION ON REQUEST FOR WITHDRAWAL AS ATTORNEY**

This is a decision on the Request To Withdraw from Representation filed September 4, 2002.

A grantable request to withdraw as attorney of record should indicate thereon the present mailing addresses of the attorney(s) who is/are withdrawing from the record and of the applicant. The request for withdrawal must be signed by every attorney seeking to withdraw or contain a clear indication that one attorney is signing on behalf of another/others. A request to withdraw will not be approved unless at least 30 (thirty) days would remain between the date of approval and the later of the expiration date of a time to file a response or the expiration date of the maximum time period which can be extended under 37 C.F.R. § 1. 136(a). The effective date of withdrawal being the date of decision and not the date of request. See M.P.E.P. § 402.06. 37 C.F.R. § 1.36 further requires that the applicant or patent owner be notified of the withdrawal of the attorney or agent.

The request is **GRANTED**.

All future communications from the Office will be directed to the below-listed address until otherwise notified by applicant. This correspondence address is provided by the withdrawn attorney(s). Applicant is reminded of the obligation to promptly notify the Patent and Trademark Office (Office) of any change in correspondence address to ensure receipt of all communications from the Office.

Vincent N. Trans
Special Programs Examiner
Technology Center 2100
Computer Architecture and Software
(703) 305-9750

UNITED STATES PATENT AND TRADEMARK OFFICE

Commissioner for Patents
United States Patent and Trademark Office
P.O. Box 1450
Alexandria, VA 22313-1450
www.uspto.gov

ROBERT DEBERARDINE
ABBOTT LABORATORIES
100 ABBOTT PARK ROAD
DEPT. 377/AP6A
ABBOTT PARK, IL 60064-6008

COPY MAILED

SEP 2 3 2005

OFFICE OF PETITIONS

In re Application of	:	
D. Bruce Modesitt et al	:	
Application No. 10/152,272	:	ON PETITION
Filed: May 20, 2002	:	
Attorney Docket No. 6771.US.P1	:	

This is a decision on the petition under 37 CFR 1.137(b), filed September 6, 2005, to revive the above-identified application.

The petition is **GRANTED**.

The above-identified application became abandoned for failure to submit the issue fee/publication fee in a timely manner in reply to the Notice of Allowance mailed May 13, 2005, which set a statutory period for reply of three (3) months. Accordingly, the above-identified application became abandoned on August 16, 2005.

Telephone inquiries concerning this decision should be directed to Wan Laymon at (571) 272-3220.

This matter is being referred to Publishing Division.

Wan Laymon
Petitions Examiner
Office of Petitions
Office of the Deputy Commissioner
for Patent Examination Policy

UNITED STATES PATENT AND TRADEMARK OFFICE

Commissioner for Patents
United States Patent and Trademark Office
P.O. Box 1450
Alexandria, VA 22313-1450
www.uspto.gov

NOVOZYMES NORTH AMERICA, INC.
500 FIFTH AVENUE
SUITE 1600
NEW YORK, NY 10110

COPY MAILED

JUN 0 9 2004

OFFICE OF PETITIONS

ON PETITION

In re Application of :
Borch, et al :
Application No. 10/152,300 :
Filed: May 21, 2002 :
Attorney Docket No. 10142.200-US :

This is a decision on the petition under 37 CFR 1.137(b), filed May 26, 2004, to revive the above-identified application.

The petition is **dismissed.**

Any request for reconsideration of this decision must be submitted within TWO (2) MONTHS from the mail date of this decision. Extensions of time under 37 CFR 1.136(a) are permitted. The reconsideration request should include a cover letter entitled "Renewed Petition under 37 CFR 1.137(b)."

This application became abandoned for failure to timely reply to the Office action mailed November 14, 2003. Accordingly, this application became abandoned on February 15, 2004.

Effective December 1, 1997, the provisions of 37 CFR 1.137(b) now provide that where the delay in reply was unintentional, a petition may be filed to revive an abandoned application pursuant to 37 CFR 1.137(b). A grantable petition pursuant to 37 CFR 1.137(b) must be accompanied by:

> (1) the required reply, unless previously filed. In a nonprovisional application abandoned for failure to prosecute, the required reply may be met by the filing of a continuing application. In an application, abandoned or lapsed for failure to pay the issue fee or any portion thereof, the required reply must be the payment of the issue fee or any outstanding balance thereof.

(2) the petition fee as set forth in 37 CFR 1.17(m);

(3) a statement that the **entire** delay in filing the required reply from the due date for the reply until the filing of a grantable petition pursuant to 37 CFR 1.137(b) was unintentional. The Commissioner may require additional information where there is a question whether the delay was unintentional; and

(4) any terminal disclaimer (and fee set forth in 37 CFR 1.20(d)) required pursuant to 37 CFR 1.137(d).

The instant petition does not satisfy requirement (1) above.

A reply to the Office action, mailed Novenber 14, 2003, has not been submitted. As such, the petition must be dismissed.

Please note, pursuant to 37 CFR 1.136, an extension of time must be filed prior to the expiration of the maximum period obtainable for reply to avoid abandonment. Accordingly, since the $950.00 extension of time submitted with the petition on May 26, 2004 was subsequent to the maximum period obtainable for reply, this fee is unnecessary and will be credited to petitioner's deposit account no. 50-1701.

Further correspondence with respect to this matter should be addressed as follows:

By mail: Mail Stop Petition
Commissioner for Patents
Box 1450
Alexandria, VA 22313

By FAX: (703) 872-9306
Attn: Office of Petitions

By hand: Customer Service Window
2011 South Clark Place
Crystal Plaza Two (left side entrance of building)
Arlington, VA

Telephone inquiries should be directed to the undersigned at (703) 306-9200.

Edward J. Tannouse
Petitions Attorney
Office of Petitions
United States Patent and Trademark Office

UNITED STATES PATENT AND TRADEMARK OFFICE

Commissioner for Patents
United States Patent and Trademark Office
P.O. Box 1450
Alexandria, VA 22313-1450
www.uspto.gov

COPY MAILED

APR 25 2007

OFFICE OF PETITIONS

NOVOZYMES NORTH AMERICA, INC.
500 FIFTH AVENUE
SUITE 1600
NEW YORK, NY 10110

In re Application of
Kim Borch et al.
Application No. 10/152,300
Filed: May 21, 2002
Attorney Docket No: 101142.200-US

ON PETITION

This is a decision on the renewed petition under 37 CFR 1.137(b)[1], filed July 2, 2004, to revive the above-identified application.

The petition is **GRANTED**.

This application became abandoned February 18, 2004 for failure to file a timely response to the Office Action mailed November 14, 2003. Accordingly, a Notice of Abandonment was mailed June 25, 2004.

The petition satisfies the requirements of 37 CFR 1.137(b) in that petitioner has supplied (1) the reply in the form of a continuation application under 37 CFR 1.53(b); (2) the petition fee of $1330; and (3) an adequate statement of unintentional delay.

Since the response to the office action mailed November 14, 2003 has not been provided, this application is being revived for purposes of continuity only. Since continuity has been established by this decision reviving the application, the application is again abandoned in favor of divisional application no.10/846,123 filed May 14, 2004, pursuant to the provisions of 37 CFR 1.53(b).

This matter is being referred to Technology Center 1654 for processing of the continuation application filed May 14, 2004.

Telephone inquiries related to this decision should be directed to the undersigned Petitions Attorney at (571) 272-3212.

Patricia Faison-Ball

Patricia Faison-Ball
Senior Petitions Attorney
Office of Petitions

---

[1]Effective December 1, 1997, the provisions of 37 CFR 1.137(b) now provide that where the delay in reply was unintentional, a petition may be filed to revive an abandoned application or a lapsed patent pursuant to 37 CFR 1.137(b). A grantable petition filed under the provisions of 37 CFR 1.137(b) must be accompanied by:

(1) the required reply, unless previously filed. In a nonprovisional application abandoned for failure to prosecute, the required reply may be met by the filing of a continuing application. In an application or patent, abandoned or lapsed for failure to pay the issue fee or any portion thereof, the required reply must be the payment of the issue fee or any outstanding balance thereof.

(2) the petition fee as set forth in 37 CFR 1.17(m);

(3) a statement that the entire delay in filing the required reply from the due date for the reply until the filing of a grantable petition pursuant to 37 CFR 1.137(b) was unintentional. The Commissioner may required additional information where there is a question whether the delay was unintentional; and

(4) any terminal disclaimer (and fee as set forth in 37 CFR 1.20(d)) required pursuant to 37 CFR 1.137(c)).

UNITED STATES PATENT AND TRADEMARK OFFICE

Commissioner for Patents
United States Patent and Trademark Office
P.O. Box 1450
Alexandria, VA 22313-1450
www.uspto.gov

Paper No. 6

MCINTYRE-LILLEY
INTELLECTUAL PROPERTY MANAGEMENT SERVICES
SUITE #12
2000 SOUTH 2ND STREET
ARLINGTON, VA 22204

COPY MAILED

MAY 2 6 2004

OFFICE OF PETITIONS

In re Application of	:	
Sukigara, Motoyuki	:	
Application No. 10/152,315	:	ON PETITION
Filed: May 22, 2002	:	
Attorney Docket No. WC-02-02-03.00	:	

This is a decision on the petition under 37 C.F.R. § 1.137(b), filed May 19, 2004, to revive the above-identified application.

The petition is **GRANTED.**

The above-identified application became abandoned for failure to reply in a timely manner to the Notice to File Missing Parts of Application (Notice) mailed June 21, 2002. The Notice set a period for reply of two (2) months from the mail date of the Notice. No extensions of time under the provisions of 37 CFR 1.136(a) were obtained. Accordingly, the above-identified application became abandoned on August 22, 2002. A Notice of Abandonment was mailed on December 24, 2003.

Petitioner has met the requirements to revive the above-identified application pursuant to 37 CFR 1.137(b).

The file is now being forwarded to the Office of Initial Patent Examination for further processing.

Telephone inquiries should be directed to the undersigned at (703) 306-0482.

Liana Chase

Liana Chase
Petitions Examiner
Office of Petitions
Office of the Deputy Commissioner
for Patent Examination Policy

UNITED STATES PATENT AND TRADEMARK OFFICE

COMMISSIONER FOR PATENTS
UNITED STATES PATENT AND TRADEMARK OFFICE
P.O. BOX 1450
ALEXANDRIA, VA 22313-1450
www.uspto.gov

Paper No. 6

McIntyre-Lilley Intellectual
Property Management Services
Suite #12
2000 South 2nd Street
Arlington, VA 22204

COPY MAILED
JUN 0 2 2004
OFFICE OF PETITIONS

In re Application of
Motoyuki Sukigara
Application No.: 10/152,316
Filed: May 22, 2002
Attorney Docket No: WC-02-01-02.00

ON PETITION

This is in response to the petition under 37 CFR 1.137(b) filed May 19, 2004.

The petition under 37 CFR 1.137(b) is **granted**.

On June 21, 2002, a "Notice to File Missing Parts of Nonprovisional Application" (the "Notice") was mailed by the Office allowing a two month period for reply. Extension of time were available pursuant to 37 CFR 1.136(a). The Notice required payment of the filing fee and payment of a surcharge for the late payment of the filing fee. A proper response was not received within the allowable period, and the application became abandoned on August 22, 2002. A Notice of Abandonment was mailed on December 24, 2003.

The above-identified application has been abandoned for an extended period of time. The Patent and Trademark Office is relying on petitioner's duty of candor and good faith and accepting the statement that the entire delay in filing the required reply form the due date for the reply until the filing of a grantable petition pursuant to 37 CFR 1.137(b) was unintentional. See Changes to Patent Practice and Procedure, 62 Fed. Reg. at 53160 and 53178; 1203 Off. Gaz. Pat. Office at 88 and 103 (responses to comments 64 and 109) (applicant obligated under 37 CFR 10.18 to inquire into the underlying facts and circumstances when providing the statement required by 37 CFR 1.137(b) to the Patent and Trademark Office.

The filing fee of $770.00 and surcharge of $130.00 were received on May 19, 2004, and are made of record.

This application is being forwarded to the Office of Initial Patent Examination for further processing.

Telephone inquiries regarding this decision should be directed to the undersigned at (703) 305-0010.

Kenya A. McLaughlin
Petitions Attorney
Office of Petitions

UNITED STATES PATENT AND TRADEMARK OFFICE

Commissioner for Patents
United States Patent and Trademark Office
P.O. Box 1450
Alexandria, VA 22313-1450
www.uspto.gov

Paper No. 6

MCINTYRE-LILLEY INTELLECTUAL PROPERTY MANAGEMENT SERVICES
SUITE #12
2000 SOUTH 2ND STREET
ARLINGTON, VA 22204

COPY MAILED
MAY 2 6 2004
OFFICE OF PETITIONS

In re Application of	:	
Sukigara, Motoyuki	:	
Application No. 10/152,317	:	ON PETITION
Filed: May 22, 2002	:	
Attorney Docket No. WC-02-01-01.00	:	

This is a decision on the petition under 37 C.F.R. § 1.137(b), filed May 19, 2004, to revive the above-identified application.

The petition is **GRANTED.**

The above-identified application became abandoned for failure to reply in a timely manner to the Notice to File Missing Parts of Application (Notice) mailed June 21, 2002. The Notice set a period for reply of two (2) months from the mail date of the Notice. No extensions of time under the provisions of 37 CFR 1.136(a) were obtained. Accordingly, the above-identified application became abandoned on August 22, 2002. A Notice of Abandonment was mailed on December 24, 2003.

Petitioner has met the requirements to revive the above-identified application pursuant to 37 CFR 1.137(b).

The file is now being forwarded to the Office of Initial Patent Examination for further processing.

Telephone inquiries should be directed to the undersigned at (703) 306-0482.

Liana Chase
Petitions Examiner
Office of Petitions
Office of the Deputy Commissioner
for Patent Examination Policy

UNITED STATES PATENT AND TRADEMARK OFFICE

Commissioner for Patents
United States Patent and Trademark Office
P.O. Box 1450
Alexandria, VA 22313-1450
www.uspto.gov

Richard Lilley
MCINTYRE-LILLEY INTELLECTUAL
PROPERTY MANAGEMENT SERVICES
Suite #12
2000 South 2nd Street
Arlington, VA 22204

MAIL

AUG 1 2 2005

DIRECTOR OFFICE
TECHNOLOGY CENTER 2100

In re Application of:
Motoyuki Sukigara
Application No. 10/152,317
Filed: May 22, 2002
For: NETWORK DEVICE, SERVER DEVICE, CLIENT DEVICE, AND METHOD AND PROGRAM FOR ASSIGNING NETWORK IP ADDRESS

DECISION ON REQUEST FOR WITHDRAWAL AS ATTORNEY

This is a decision on the Request To Withdraw from Representation filed January 24, 2005.

A grantable request to withdraw as attorney of record should indicate thereon the present mailing addresses of the attorney(s) who is/are withdrawing from the record and of the applicant. The request for withdrawal must be signed by every attorney seeking to withdraw or contain a clear indication that one attorney is signing on behalf of another/others. A request to withdraw will not be approved unless at least 30 (thirty) days would remain between the date of approval and the later of the expiration date of a time to file a response or the expiration date of the maximum time period which can be extended under 37 C.F.R. § 1.136(a). The effective date of withdrawal is the date of decision and not the date of request. See M.P.E.P. § 402.06. **37 C.F.R. § 10.40(a) further requires that the applicant or patent owner be notified of the withdrawal of the attorney or agent**.

There is no indication that Applicant has been notified of the request for withdrawal.

Accordingly, the request is **DENIED**.

All future communications from the United States Patent and Trademark Office (Office) will continue to be directed to the above-listed address until otherwise notified by applicant. Applicant is reminded of the obligation to promptly notify the Office of any change in correspondence address to ensure receipt of all communications from the Office.

Michelle R. Eiser

Vincent N. Trans
Special Program Examiner
Technology Center 2100
Computer Architecture, Software, and
Information Security
571-272-3613

SPE RESPONSE FOR CERTIFICATE OF CORRECTION

Paper No.: _____

DATE : 2/11/07

TO SPE OF : ART UNIT 3747

SUBJECT : Request for Certificate of Correction on Patent No.: 6928988

A response is requested with respect to the accompanying request for a certificate of correction.

Please complete this form and return with file, within 7 days to:
Palm location **7580, Certificates of Correction Branch – South Tower – 9A22**
If response is for an IFW, **return to employee (named below) via PUBSCofC Team in MADRAS.**
With respect to the change(s) requested, correcting Office and/or Applicant's errors, should the patent read as shown in the certificate of correction (COCIN)? No new matter should be introduced, nor should the scope or meaning of the claims be changed.

Valerie Jackson

Thank You For Your Assistance

Certificates of Correction Branch
Tel. No. 703-308-9390 ext. 114

The request for issuing the above-identified correction(s) is hereby:
Note your decision on the appropriate box.

- ☑ **Approved** — All changes apply.
- ☐ **Approved in Part** — Specify below which changes **do not** apply.
- ☐ **Denied** — State the reasons for denial below.

Comments:

STEPHEN K. CRONIN
SUPERVISORY PATENT EXAMINER

SPE

3747
Art Unit

UNITED STATES PATENT AND TRADEMARK OFFICE

COMMISSIONER FOR PATENTS
UNITED STATES PATENT AND TRADEMARK OFFICE
P.O. BOX 1450
ALEXANDRIA, VA 22313-1450
www.uspto.gov

Paper No. 16

MARK A. LITMAN & ASSOCIATES, P.A
York Business Center, Suite 205
3209 W. 76th St.
Edina MN 55435

COPY MAILED

SEP 0 9 2004

OFFICE OF PETITIONS

In re Application of :
Derek J. Webb, et al. :
Application No. 10/152,325 :
Filed: May 20, 2002 :
Attorney Docket No. PA0566.AP.US:

ON PETITION

This is a decision on the petition under 37 CFR 1.137(b) filed July 13, 2004, to revive the above-identified application.

The petition is DISMISSED AS MOOT.

In reviewing the application, it is noted that the filing of a petition under 37 CFR 1.137(b) is not an appropriate course of action. A Notice of Allowance and Issue Fee Due was mailed on March 3, 2004. In response, on June 3, 2004, a Request for Continued Examination (RCE) was filed. It is noted that on June 3, 2004, a Notice of Improper Request for Continued Examination (RCE) was mailed. However, the RCE was subsequently accepted as a proper filing by an Office communication from the Examiner mailed July 2, 2004. Since the RCE was considered a proper filing in accordance with 37 CFR 1.114 and it was filed within the period set for paying the issue fee as required by the Notice of Allowance and Issue Fee Due mailed March 3, 2004, no abandonment exists.

Under the circumstances of this case, the $1330 petition fee is being credited to counsel's deposit account.

The application is being returned to Technology Center 3600 for appropriate action on the RCE filed June 3, 2004, including consideration of the amendment filed July 13, 2004.

Telephone inquiries concerning this matter may be directed to the undersigned at (703) 305-9220.

Sherry D. Brinkley
Petitions Examiner
Office of Petitions
Office of the Deputy Commissioner
for Patent Examination Policy

OIPE JC117
SEP 2 3 2002
PATENT & TRADEMARK OFFICE

#3

UNITED STATES PATENT AND TRADEMARK OFFICE

COMMISSIONER FOR PATENTS
UNITED STATES PATENT AND TRADEMARK OFFICE
WASHINGTON, D.C. 20231
www.uspto.gov

APPLICATION NUMBER	FILING/RECEIPT DATE	FIRST NAMED APPLICANT	ATTORNEY DOCKET NUMBER
10/152,326	05/20/2002	Benjamin Raby	2825.2031-001

CONFIRMATION NO. 7051
FORMALITIES LETTER
OC000000008333648

021005
HAMILTON, BROOK, SMITH & REYNOLDS, P.C.
530 VIRGINIA ROAD
P.O. BOX 9133
CONCORD, MA 01742-9133

Date Mailed: 06/21/2002

NOTICE TO FILE MISSING PARTS OF NONPROVISIONAL APPLICATION

09/25/2002 MBERHE 00000069 10152326

01 FC:101 740.00 OP
02 FC:105 130.00 OP
03 FC:103 162.00 OP
04 FC:102 420.00 OP

FILED UNDER 37 CFR 1.53(b)

Filing Date Granted

Items Required To Avoid Abandonment:

An application number and filing date have been accorded to this application. The item(s) indicated below, however, are missing. Applicant is given **TWO MONTHS** from the date of this Notice within which to file all required items and pay any fees required below to avoid abandonment. Extensions of time may be obtained by filing a petition accompanied by the extension fee under the provisions of 37 CFR 1.136(a).

- The statutory basic filing fee is missing.
  Applicant must submit $ **740** *to complete the basic filing fee for a non-small entity. If appropriate, applicant may make a written assertion of entitlement to small entity status and pay the small entity filing fee (37 CFR 1.27).*
- The oath or declaration is missing.
  A properly signed oath or declaration in compliance with 37 CFR 1.63, identifying the application by the above Application Number and Filing Date, is required.
- To avoid abandonment, a late filing fee or oath or declaration surcharge as set forth in 37 CFR 1.16(l) of $130 for a non-small entity, must be submitted with the missing items identified in this letter.

Items Required To Avoid Processing Delays:

The item(s) indicated below are also required and should be submitted with any reply to this notice to avoid further processing delays.

- Additional claim fees of $**582** as a non-small entity, including any required multiple dependent claim fee, are required. Applicant must submit the additional claim fees or cancel the additional claims for which fees are due.

SUMMARY OF FEES DUE:

Total additional fee(s) required for this application is $**1452** for a Large Entity

- $**740** Statutory basic filing fee.
- $**130** Late oath or declaration Surcharge.
- Total additional claim fee(s) for this application is $**582**
  - $**162** for **9** total claims over 20.
  - $**420** for **5** independent claims over 3.

A copy of this notice MUST be returned with the reply.

Customer Service Center
Initial Patent Examination Division (703) 308-1202
PART 2 - COPY TO BE RETURNED WITH RESPONSE

::ODMA\MHODMA\iManage;341268;1
LMT/MMY/(wlm)
09/19/02

PATENT APPLICATION
Docket No.: 2825.2031-001

IN THE UNITED STATES PATENT AND TRADEMARK OFFICE

Applicants: Benjamin Raby, Thomas J. Hudson and Catherine Laprise

Application No.: 10/152,326 Group: 1614

Filed: May 20, 2002 Examiner: Not assigned

Confirmation No.: 7051

For: Atopy-Associated Sequence Variants on Chromosome 12

OIPE JC117 SEP 2 3 2002 PATENT & TRADEMARK OFFICE

CERTIFICATE OF MAILING

I hereby certify that this correspondence is being deposited with the United States Postal Service with sufficient postage as First Class Mail in an envelope addressed to Assistant Commissioner for Patents, P.O. Box 2327, Arlington, VA 22202

on 9/20/02 Dawn Myers
Date Signature

Dawn Myers
Typed or printed name of person signing certificate

REPLY TO NOTICE TO FILE MISSING PARTS OF APPLICATION

Box Missing Parts
Assistant Commissioner for Patents
P.O. Box 2327
Arlington, VA 22202

Sir:

In reply to the Notice to File Missing Parts dated June 21, 2002, the following documents and fees are being submitted for filing in the captioned application. A copy of the Notice is attached.

[X] **EXECUTED DECLARATION FOR PATENT APPLICATION**
(Separate transmittal letter and postcard not required)

[ ] **POWER OF ATTORNEY DOCUMENT**
[ ] **GRANTED BY INVENTOR(S)**
[ ] **GRANTED BY ASSIGNEE, including Statement under 37 C.F.R. 3.73(b)**
(Separate transmittal letter and postcard not required)

[ ] **PRELIMINARY AMENDMENT**
(Separate transmittal letter and postcard not required)

[X] **FILING FEE** - with Fee Transmittal for Patent Applications in duplicate
Fee calculations based on:
[X] Claims as originally filed
[ ] Claims upon entry of the Preliminary Amendment filed [herewith] [with the application]
(Separate transmittal letter and postcard not required)

[X] **SURCHARGE** - surcharge fee of $130.00
(Separate transmittal letter and postcard not required)

09/25/2002 MBERHE 00000069 10152326
05 FC:115 110.00 OP

[ ] **SEQUENCE LISTING** - Filed concurrently and is attached
(Separate transmittal letter and postcard required)

[ ] **SUBSTITUTE DRAWINGS**
[ ] Sheets of substitute drawings consisting of Figs. 1 - [ ] are enclosed
(Separate transmittal letter and postcard not required)

[X] **PETITION FOR EXTENSION OF TIME**
[X] Applicants hereby petition to extend the time to respond to the Notice to File Missing Parts dated June 21, 2002 for one month from August 21, 2002 to September 21, 2002. The appropriate fee of $110.00 is included in the enclosed check
[ ] A [ ] month extension of time to respond to the Notice to File Missing Parts dated [ ] was filed on [ ] with payment of a $[ ] fee
[ ] Applicant hereby petitions for an additional [ ] month extension of time to respond to the Notice to File Missing Parts. The appropriate fee of $[ ] is included in the enclosed check
(Separate Petition for Extension of Time and postcard not required)

[ ] **REQUEST FOR CORRECTED FILING RECEIPT** - Filed concurrently and is attached
(Separate transmittal letter and postcard required)

[ ] **STATEMENT CLAIMING SMALL ENTITY STATUS**
[ ] Was filed on [ ]
[ ] Is enclosed herewith
(Separate transmittal letter and postcard not required)
[ ] In view of the small entity status of the captioned application, we hereby request a reimbursement of 50% of the filing fees in the amount of $[ ] which were paid on [ ] to be deposited in Deposit Account No. 08-0380

The fees required for filing the indicated documents are enclosed in the form of a check in the total amount of $1,562.00. Please charge any deficiency or credit any overpayment in the fees that may be due in this matter to Deposit Account No. 08-0380. A copy of this letter is enclosed for accounting purposes.

Respectfully submitted,

HAMILTON, BROOK, SMITH & REYNOLDS, P.C.

By Lisa M Treannie

Lisa M. Treannie
Registration No.: 41,368
Tel.: (978) 341-0036
Fax: (978) 341-0136

Concord, Massachusetts 01742-9133
Date: 9-20-02

OIPE JC117
SEP 2 3 2002
PATENT & TRADEMARK OFFICE

HAMILTON, BROOK, SMITH & REYNOLDS, P.C.

#3

FEE TRANSMITTAL FOR PATENT APPLICATIONS		
	Attorney Docket Number	2825.2031-001
	Application Number	10/152,326
	First Named Inventor	Benjamin Raby

CLAIM CALCULATION (includes any preliminary amendment)

CLAIMS	(1) FOR	(2) NUMBER FILED	(3) NUMBER EXTRA	(4) RATE	(5) CALCULATIONS
	TOTAL CLAIMS (37 CFR 1.16(c) or (j))	29 – 20* =	9	x $ 18 =	$ 162
	INDEPENDENT CLAIMS (37 CFR 1.16(b) or (i))	8 – 3** =	5	x $ 84 =	$ 420
	MULTIPLE DEPENDENT CLAIMS (if applicable) (37 CFR 1.16(d))			+ $ 280 =	$
				BASIC FEE (37 CFR 1.16(a) or (h))	$ 740
				Total of above Calculations =	$ 1322
				Reduction by 50% for filing by small entity (37 CFR 1.9, 1.27, 1.28) =	$
				TOTAL =	$ 1322
				Surcharge - Late Filing of Declaration or Filing Fees (37 C.F.R. 1.16(e)) =	$ 130
				Petition for Extension of Time Fee (37 C.F.R. 1.17) =	$ 110
				Assignment Recordation Fee = (only when filed with application)	$
	* Reissue claims in excess of 20 and over original patent ** Reissue independent claims over original patent			TOTAL =	$ 1562

1. Small entity status:

   a. [ ] A small entity statement is enclosed.

   b. [ ] A small entity statement was filed in the prior non-provisional application and such status is still proper and desired.

   c. [ ] Is no longer claimed.

2. [X] A general authorization is hereby granted to charge deposit account number 08-0380 for any fees required under 37 CFR 1.16 and 1.17 in order to maintain pendency of this application. A copy of this authorization is enclosed for accounting purposes.

3. [X] A check is enclosed for **$1562.00**. [ ] Please charge **$[ ]** to Deposit Account No. 08-0380.

4. [ ] Other: _____

Signature	Lisa M Treannie	Date	9-20-02
Submitted by Typed or Printed Name	Lisa M. Treannie	Reg. Number	41,368

::ODMA\MHODMA\iManage;341264;1

SPE RESPONSE FOR CERTIFICATE OF CORRECTION

Paper No.: _____

DATE : March 24, 2007

TO SPE OF : ART UNIT 1711

SUBJECT : Request for Certificate of Correction on Patent No.: **6907515 B2 – 10/152337**

A response is requested with respect to the accompanying request for a certificate of correction.

Please complete this form and return with file, within **7** days to:
Palm location **7580, Certificates of Correction Branch – South Tower – 9A22**
If response is for an IFW, **return to employee (named below) via PUBSCofC Team in MADRAS.**
With respect to the change(s) requested, correcting Office and/or Applicant's errors, should the patent read as shown in the certificate of correction (COCIN)? No new matter should be introduced, nor should the scope or meaning of the claims be changed.

Thank You For Your Assistance

Elisha Evans
Certificates of Correction Branch
Tel. No. 703-308-9390 EXT 110

The request for issuing the above-identified correction(s) is hereby:
Note your decision on the appropriate box.

- ☒ **Approved** — All changes apply.
- ☐ **Approved in Part** — Specify below which changes **do not** apply.
- ☐ **Denied** — State the reasons for denial below.

Comments:

_____

_____

_____

_____

_____

Eric Cole for Eddie Chan — 2183

ERIC COLEMAN
PRIMARY EXAMINER — **SPE** — **Art Unit**

SPE RESPONSE FOR CERTIFICATE OF CORRECTION

Paper No.: _____

DATE : October 13, 2005

TO SPE OF : ART UNIT 3713

SUBJECT : Request for Certificate of Correction on Patent No.: 6,945,783

A response is requested with respect to the accompanying request for a certificate of correction.

Please complete this form and return with file, within **7** days to:
Palm location **7580, Certificates of Correction Branch – South Tower – 9A22**
If response is for an IFW, **return to employee (named below) via PUBSCofC Team in MADRAS.**
With respect to the change(s) requested, correcting Office and/or Applicant's errors, should the patent read as shown in the certificate of correction (COCIN)? No new matter should be introduced, nor should the scope or meaning of the claims be changed.

Magdalene Talley

Thank You For Your Assistance

Certificates of Correction Branch
Tel. No. 703-308-9309 ext. 116

The request for issuing the above-identified correction(s) is hereby:
Note your decision on the appropriate box.

- ☑ **Approved** — **All** changes apply.
- ☐ **Approved in Part** — Specify below which changes **do not** apply.
- ☐ **Denied** — State the reasons for denial below.

Comments:

[signature] **SPE**

3713 **Art Unit**

UNITED STATES PATENT AND TRADEMARK OFFICE

COMMISSIONER FOR PATENTS
UNITED STATES PATENT AND TRADEMARK OFFICE
P.O. BOX 1450
ALEXANDRIA, VA 22313-1450
www.uspto.gov

Mailed AUG 1 9 2004

Paper No.

In re Application of	:	
Koss, Ronald et al.	:	DECISION
Serial No. 10/152,429	:	ON
Filed: May 21, 2002	:	PETITION
For: NUTRITIONAL FROZEN DESSERT	:	UNDER 708.02 (VIII)
AND METHODS OF MANUFACTURE	:	

This is a decision on the petition filed on February 12, 2004, requesting that the above-identified application be granted Special Status under Sections 37 C.F.R. 1.102 and MPEP 708.02 II.

The petition has been considered and found to comply with the requirements set forth under the above noted sections.

Accordingly, the petition is **GRANTED**.

Marian C Knode

Marian C. Knode, Special Program Examiner
Technology Center 1700
Chemical and Materials Engineering

SALTER & MICHAELSON
THE HERITAGE BUILDING
321 SOUTH MAIN STREET
PROVIDENCE RI 02903-7128

UNITED STATES PATENT AND TRADEMARK OFFICE

COMMISSIONER FOR PATENTS
UNITED STATES PATENT AND TRADEMARK OFFICE
P.O. BOX 1450
ALEXANDRIA, VA 22313-1450
www.uspto.gov

Paper No. 7

ANDRUS, SCEALES, STARKE & SAWALL, LLP
100 EAST WISCONSIN AVENUE, SUITE 1100
MILWAUKEE WI 53202

COPY MAILED

FEB 0 6 2004

OFFICE OF PETITIONS

In re Application of
Wayne A. Michalski
Application No. 10/152,501
Filed: May 21, 2002
Attorney Docket No. 4470-00678

ON PETITION

This is a decision on the petition, filed January 29, 2004, under 37 CFR 1.137(b) which is treated as a petition to withdraw the holding of abandonment for the above-identified application.

The petition to withdraw the holding of abandonment is **GRANTED**.

The application was held abandoned on August 21, 2002, for failure to file a timely response to the Notice to File Missing Parts of Nonprovisional Application mailed June 20, 2002, requiring the statutory basic filing fee, oath or declaration and surcharge for its late filing, which set a (2) month shortened period for reply. No extensions of time in accordance with 37 CFR 1.136(a) were obtained. Accordingly, a Notice of Abandonment was mailed 4470-00678 January 22, 2004.

Petitioner asserts that a proper response, including the filing fee, declaration and surcharge, was mailed to the USPTO on July 18, 2002. In support of the petition, petitioner submits a copy of the reply said to have been mailed to but not received in the U.S. Patent and Trademark Office. The document contains a certificate of mailing dated July 18, 2002, and signed by petitioner's counsel, Joseph J. Jochman, Jr. Petitioners have also provided a copy of a postcard receipt itemizing the filing of a payment of $870. a declaration and power of attorney and response to Notice of Missing Parts, identifying the application by serial number, invention title, attorney docket number, and inventor's last name, bearing an Office-date stamp of July 23, 2002.[1]

The petition complies with the requirements set forth in 37 CFR 1.8(b).

Accordingly, the holding of abandonment withdrawn. In view thereof, no fees are due and none have been charged for this petition.

This application is being forwarded to the Office of Initial Patent Examination for further processing.

Telephone inquiries concerning this matter should be directed to the undersigned Petitions Attorney at (703) 305-4497.

Patricia Faison-Ball

Patricia Faison-Ball
Senior Petitions Attorney
Office of Petitions

---

[1]It should be noted that the serial number provided was incorrectly stated but because the fees were properly applied, and the other identifying information found on the postcard should have been sufficient to match the documents with the file, the requirement for the serial number will be waived *sua sponte*.

UNITED STATES PATENT AND TRADEMARK OFFICE

UNITED STATES DEPARTMENT OF COMMERCE
United States Patent and Trademark Office
Address: COMMISSIONER FOR PATENTS
P.O. Box 1450
Alexandria, Virginia 22313-1450
www.uspto.gov

ROCKWELL AUTOMATION, INC./(IH)
ATTENTION: SUSAN M. DONAHUE, E-7F19
1201 SOUTH SECOND STREET
MILWAUKEE, WI 53204

Mail Date: 04/21/2010

Applicant	: Larry Dawson Armstrong	: DECISION ON REQUEST FOR
Patent Number	: 7599999	: RECALCULATION of PATENT
Issue Date	: 10/06/2009	: TERM ADJUSTMENT IN VIEW
Appliction No	: 10/152,513	: OF WYETH AND NOTICE OF INTENT TO
Filed	: 05/21/2002	: ISSUE CERTIFICATE OF CORRECTION
		:

The Request for Recalculation is **GRANTED** to the extent indicated.

The patent term adjustment has been determined to be **913** days. The USPTO will *sua sponte* issue a certificate of correction reflecting the amount of PTA days determined by the recalculation.

Prior to the issuance of the certificate of correction, the USPTO will afford patentee an opportunity to be heard and request reconsideration. Accordingly, patentee has **one month or thirty (30) days**, whichever is longer, to file a request for reconsideration of this patent term adjustment calculation. See 35 U.S.C. 154(b)(3)(B)(ii) and 37 CFR 1.322(a)(4). No extensions of time will be granted under 37 CFR 1.136.

Patentee should use document code PET.OP if electronically filing a request for reconsideration of this patent term adjustment calculation. The patentee must also include the information required by 37 CFR 1.705(b)(2) and the fee required by 37 CFR 1.18(e). If patentee does not file a timely request for reconsideration of this patent term adjustment calculation including the information required by 37 CFR 1.705(b)(2) and the fee required by 37 CFR 1.18(e), the USPTO will issue a certificate of correction reflecting the PTA determination noted above.

Patentee should be aware that in order to preserve the right to review in the United States District Court for the District of Columbia of the USPTO patent term adjustment determination, patentee must ensure that he or she also take the steps required under 35 U.S.C. 154(b)(4)(A) in a timely manner. Nothing in the request for recalculation should be construed as providing an alternative time frame for commencing a civil action under 35 U.S.C. 154(b)(4)(A).

Any questions concerning this decision should be directed to the Office of Patent Legal Administration at 571-272-7702.

UNITED STATES PATENT AND TRADEMARK OFFICE

UNITED STATES DEPARTMENT OF COMMERCE
United States Patent and Trademark Office
Address: COMMISSIONER FOR PATENTS
P.O. Box 1450
Alexandria, Virginia 22313-1450
www.uspto.gov

STANDLEY LAW GROUP LLP
6300 Riverside Drive
Dublin, OH 43017

Mail Date: 04/21/2010

Applicant	: Cary Porter Jenkins	: DECISION ON REQUEST FOR
Patent Number	: 7613641	: RECALCULATION of PATENT
Issue Date	: 11/03/2009	: TERM ADJUSTMENT IN VIEW
Appliction No	: 10/152,516	: OF WYETH AND NOTICE OF INTENT TO
Filed	: 05/22/2002	: ISSUE CERTIFICATE OF CORRECTION
		:

The Request for Recalculation is **GRANTED** to the extent indicated.

The patent term adjustment has been determined to be **1488** days. The USPTO will *sua sponte* issue a certificate of correction reflecting the amount of PTA days determined by the recalculation.

Prior to the issuance of the certificate of correction, the USPTO will afford patentee an opportunity to be heard and request reconsideration. Accordingly, patentee has **one month or thirty (30) days**, whichever is longer, to file a request for reconsideration of this patent term adjustment calculation. See 35 U.S.C. 154(b)(3)(B)(ii) and 37 CFR 1.322(a)(4). No extensions of time will be granted under 37 CFR 1.136.

Patentee should use document code PET.OP if electronically filing a request for reconsideration of this patent term adjustment calculation. The patentee must also include the information required by 37 CFR 1.705(b)(2) and the fee required by 37 CFR 1.18(e). If patentee does not file a timely request for reconsideration of this patent term adjustment calculation including the information required by 37 CFR 1.705(b)(2) and the fee required by 37 CFR 1.18(e), the USPTO will issue a certificate of correction reflecting the PTA determination noted above.

Patentee should be aware that in order to preserve the right to review in the United States District Court for the District of Columbia of the USPTO patent term adjustment determination, patentee must ensure that he or she also take the steps required under 35 U.S.C. 154(b)(4)(A) in a timely manner. Nothing in the request for recalculation should be construed as providing an alternative time frame for commencing a civil action under 35 U.S.C. 154(b)(4)(A).

Any questions concerning this decision should be directed to the Office of Patent Legal Administration at 571-272-7702.

UNITED STATES PATENT AND TRADEMARK OFFICE

COMMISSIONER FOR PATENTS
UNITED STATES PATENT AND TRADEMARK OFFICE
P.O. BOX 1450
ALEXANDRIA, VA 22313-1450
www.uspto.gov

In re Patent No. FIELD ET AL.	:	
Issue Date: January 6, 2004	:	**DECISION GRANTING**
Appl No.: 10/152,537	:	**PETITION**
Filed: May 21, 2002	:	*37 CFR 1.324*
For: **CHEMICAL DISPENSER FOR A HARD FLOOR SURFACE CLEANER**	:	

This is a decision on the petition filed March 16, 2006 to correct inventorship under 37 CFR 1.324.

The petition is granted.

The patented file is being forwarded to Certificate of Corrections Branch for issuance of a certificate naming only the actual inventor or inventors.

Gladys JP Corcoran
Supervisory Patent Examiner
Art Unit 1744
Technology Center ***

WESTMAN CHAMPLIN & KELLY, P.A.
SUITE 1400
900 SECOND AVENUE SOUTH
MINNEAPOLIS, MN 55402-3319

UNITED STATES PATENT AND TRADEMARK OFFICE

COMMISSIONER FOR PATENTS
UNITED STATES PATENT AND TRADEMARK OFFICE
P.O. BOX 1450
ALEXANDRIA, VA 22313-1450
www.uspto.gov

DATE: April 23, 2007
TO: Certificates of Correction Branch
FROM: Gladys JP Corcoran
SPE, Art Unit 1744
SUBJECT: REQUEST FOR CERTIFICATE OF CORRECTION

Please issue a Certificate of Correction in U. S. Letters Patent No. 6,671,925 as specified on the attached Certificate.

Gladys JP Corcoran, SPE
Art Unit 1744

UNITED STATES PATENT AND TRADEMARK OFFICE

CERTIFICATE

Patent No. 6,671,925
Patented: January 6, 2004

On petition requesting issuance of a certificate for correction of inventorship pursuant to 35 U.S.C. 256, it has been found that the above identified patent, through error and without deceptive intent, improperly sets forth the inventorship. Accordingly, it is hereby certified that the correct inventorship of this patent is:

Bruce F. Field, Golden Valley, Minnesota
Joseph K. Krueger, Hopkins, Minnesota
Daniel L. Joynt, Wyoming, Minnesota
Joseph L. Pouliot, Elk River, Minnesota
Daniel J. McHugh, Lakeville, Minnesota
Bryan L. Christensen, Dayton, Minnesota
Jeffrey A. Johnson, St. Paul, Minnesota

Gladys JP Corcoran
Supervisory Patent Examiner
Art Unit 1744

UNITED STATES PATENT AND TRADEMARK OFFICE

Commissioner for Patents
United States Patent and Trademark Office
P.O. Box 1450
Alexandria, VA 22313-1450
www.uspto.gov

COPY MAILED

DEC 07 2009

OFFICE OF PETITIONS

FOLEY AND LARDNER LLP
SUITE 500
3000 K STREET NW
WASHINGTON DC 20007

In re Application of	:	
Donaldson et al.	:	
Patent Number: 7,509,647	:	
Issue Date: 03/24/2009	:	
Application No. 10/152,634	:	ON REQUEST FOR
Filing or 371(c) Date: 05/23/2002	:	RECONSIDERATION OF
Attorney Docket Number: 035348-0101	:	PATENT TERM ADJUSTMENT

This is in response to the REQUEST FOR RECONSIDERATION OF PATENT TERM ADJUSTMENT UNDER 37 C.F.R. § 1.705, filed May 22, 2009. Patentees submit that the correct patent term adjustment is 1331 days, not 661 days as indicated on the patent. Patentees request this correction on the sole basis that the Office took in excess of three years to issue the above-referenced patent and reference Wyeth v. Dudas, 580 F. Supp. 2d 138, 88 U.S.P.Q. 2d 1538 (D.D.C. 2008). It is noted that the attachment referenced by patentees does not appear in the official application file. This matter is being properly treated under 37 CFR 1.705(d).

Patentees also request that a decision on this request for reconsideration of patent term adjustment be deferred or delayed until after a final decision has been rendered in Wyeth v. Dudas. There is no specific regulatory provision for requesting that a petition under 37 CFR 1.705(d) be held in abeyance. Accordingly, the request to hold in abeyance a decision on the merits of the instant application for patent term adjustment is **DISMISSED**.

The Request for Reconsideration of Patent Term Adjustment ("PTA") under 37 CFR 1.705(d), is hereby **DISMISSED**.

On March 24, 2009, the above-identified application matured into U.S. Patent No. 7,509,647, with a patent term adjustment of 661 days. This application for patent term adjustment was timely filed within two months of the issue date of the patent. See 37 CFR 1.705(d).

Regarding Patentees request for recalculation of the patent term adjustment in view of Wyeth v. Dudas, 580 F. Supp. 2d 138, 88 U.S.P.Q. 2d 1538 (D.D.C. 2008), patentees assert that "the court determined that, under the correct interpretation of the PTA statute, periods 'overlap' are limited to 'periods of time ... [that] occur on the same day.'" Thus, a PTO delay under § 154(b)(1)(A)

overlaps with a delay under § 154(b)(1)(B) only if the delays 'occur on the same day.'" Application for PTA at p.2., citing to Wyeth, slip op. at p.8.

Patentees provide that the total of non-overlapping PTO delay under § 154(b)(1)(A) & (B) is 1514 days; the total of Applicant delay is 183 days, and the final PTA determination is 1331 days.

Under 37 CFR 1.703(f), patentees are entitled to a period of patent term adjustment equal to the period of delays based on the grounds set forth in 37 CFR 1.702 reduced by the period of time equal to the period of time during which patentees failed to engage in reasonable efforts to conclude prosecution pursuant to 37 CFR 1.704. In other words, patentees are entitled to the period of Office delay reduced by the period of applicant delay.

The Office asserts that as of the filing of the RCE on September 14, 2007, the application was pending three years and 843 days (May 24, 2005 to September 13, 2007). The Office agrees that certain action was not taken within the specified time frame, and thus, the entry of a period of adjustment of 791 days is correct. At issue is whether patentees should be accorded an additional 843 days of patent term adjustment for the Office taking in excess of three years to issue the patent, as well as 791 days for Office failure to take a certain action within a specified time frame (or examination delay).

The Office contends that the period of examination delay of 791 days overlaps with the period of adjustment of 843 days accrued for over three year delay. Patentees' calculation of the period of overlap is inconsistent with the Office's interpretation of this provision. 35 U.S.C. 154(b)(2)(A) limits the adjustment of patent term, as follows:

> To the extent that the periods of delay attributable to grounds specified in paragraph (1) overlap, the period of any adjustment granted under this subsection shall not exceed the actual number of days the issuance of the patent was delayed.

Likewise, 35 CFR 1.703(f) provides that:

> To the extent that periods of delay attributable to the grounds specified in § 1.702 overlap, the period of adjustment granted under this section shall not exceed the actual number of days the issuance of the patent was delayed.

As explained in *Explanation of 37 CFR 1.703(f) and of the United States Patent and Trademark Office Interpretation of 35 U.S.C. 154(b)(2)(A)*, 69 Fed. Reg. 34283 (June 21, 2004), the Office interprets 35 U.S.C. 154(b)(2)(A) as permitting either patent term adjustment under 35 U.S.C. 154(b)(1)(A)(i)-(iv), or patent term adjustment under 35 U.S.C. 154(b)(1)(B), but not as permitting patent term adjustment under both 35 U.S.C. 154(b)(1)(A)(i)-(iv) and 154(b)(1)(B). Accordingly, the Office implements the overlap provision as follows:

> If an application is entitled to an adjustment under 35 U.S.C. 154(b)(1)(B), the entire period during which the application was pending (except for periods excluded under 35 U.S.C. 154(b)(1)(B)(i)-(iii)), and not just the period beginning three years after the actual filing date of the application, is the period of delay under 35 U.S.C. 154(b)(1)(B) in determining whether periods of delay overlap under 35 U.S.C. 154(b)(2)(A). Thus, any days of delay for Office issuance of the patent more than 3 years after the filing date of the application, which overlap with the days of patent term adjustment accorded prior to the issuance of the patent will not result in any additional patent term adjustment. See 35 U.S.C. 154(b)(1)(B), 35 U.S.C. 154(b)(2)(A), and 37 CFR § 1.703(f). See *Changes to Implement Patent Term Adjustment Under Twenty Year Term; Final Rule*, 65 Fed. Reg. 56366 (Sept. 18, 2000). See also *Revision of Patent Term Extension and Patent Term Adjustment Provisions; Final Rule*, 69 Fed. Reg. 21704 (April 22, 2004), 1282 Off. Gaz. Pat. Office 100 (May 18, 2004). See also *Explanation of 37 CFR 1.703(f) and of the United States Patent and Trademark Office Interpretation of 35 U.S.C. 154(b)(2)(A)*, 69 Fed. Reg. 34283 (June 21, 2004).

The current wording of § 1.703(f) was revised in response to the misinterpretation of this provision by a number of Patentees. The rule was slightly revised to more closely track the corresponding language of 35 U.S.C. 154(b)(2)(A). The relevant portion differs only to the extent that the statute refers back to provisions of the statute whereas the rule refers back to sections of the rule. This was not a substantive change to the rule nor did it reflect a change of the Office's interpretation of 35 U.S.C. 154(b)(2)(A). As stated in the *Explanation of 37 CFR 1.703(f) and of the United States Patent and Trademark Office Interpretation of 35 U.S.C. 154(b)(2)(A)*, the Office has consistently taken the position that if an application is entitled to an adjustment under the three-year pendency provision of 35 U.S.C. 154(b)(1)(B), the entire period during which the application was pending before the Office (except for periods excluded under 35 U.S.C. 154(b)(1)(B)(i)-(iii)), and not just the period beginning three years after the actual filing date of the application, is the relevant period under 35 U.S.C. 154(b)(1)(B) in determining whether periods of delay "overlap" under 35 U.S.C. 154(b)(2)(A).

This interpretation is consistent with the statute. Taken together the statute and rule provide that to the extent that periods of delay attributable to grounds specified in 35 U.S.C. 154(b)(1) and in corresponding § 1.702 overlap, the period of adjustment granted shall not exceed the actual number of days the issuance of the patent was delayed. The grounds specified in these sections cover the A) guarantee of prompt Patent and Trademark Office responses, B) guarantee of no more than 3-year application pendency, and C) guarantee or adjustments for delays due to interference, secrecy orders and appeals. A section by section analysis of 35 U.S.C. 154(b)(2)(A) specifically provides that:

> Section 4402 imposes limitations on restoration of term. In general, pursuant to [35 U.S.C.] 154(b)(2)(A)-(C), total adjustments granted for restorations under [35 U.S.C. 154](b)(1) are reduced as follows: (1) To the extent that there are multiple grounds for extending the term of a patent that may exist simultaneously (e.g., delay due to a secrecy order under [35 U.S.C.] 181 and administrative delay under [35 U.S.C.] 154(b)(1)(A)),

the term should not be extended for each ground of delay but only for the actual number of days that the issuance of a patent was delayed; See 145 Cong. Rec. S14,718[1]

As such, the period for over three-year pendency does not overlap only to the extent that the actual dates in the period beginning three years after the date on which the application was filed overlap with the actual dates in the periods for failure of the Office to take action within specified time frames. In other words, consideration of the overlap does not begin three years after the filing date of the application.

Pursuant to 35 U.S.C. 154(b)(1)(A) and 37 CFR 1.702(a)(1), 791 days of patent term adjustment were accorded during the pendency of the application for Office delay prior to the filing of the RCE. Pursuant to 35 U.S.C. 154(b)(1)(B) and 37 CFR 1.702(b), 843 days of patent term adjustment accrued at the time of submission of the RCE for Office issuance of the patent more than three years after the application filing date.

The 791 days of patent term adjustment under 37 CFR 1.702(a) overlaps with the 843 days of patent term adjustment under 37 CFR 1.702(b). Entry of both the 791 days and the 843 days is neither permitted nor warranted given that 843 days is the actual number of days issuance of the patent was delayed at the time of submission of the RCE.

Accordingly, at issuance, the Office entered 661 days of patent term adjustment, having considered the 843 days of Office delay under the three-year pendency provision in conjunction with the 791 days of delay under 37 CFR 1.702(a), reduced 183 days for applicants' delay.

In view thereof, no adjustment to the patent term has been made.

The Office acknowledges submission of the $200.00 fee set forth in 37 CFR 1.18(e). No additional fees are required.

Telephone inquiries specific to this matter should be directed to Attorney Derek Woods, at (571) 272-3232.

/ALESIA M. BROWN/

Alesia M. Brown
Senior Petitions Attorney
Office of Petitions
Office of the Deputy Commissioner
for Patent Examination Policy

---

[1] The AIPA is title IV of the Intellectual Property and Communications Omnibus Reform Act of 1999 (S. 1948), which was incorporated and enacted as law as part of Pub. L. 106-113. The Conference Report for H.R. 3194, 106th Cong. 1st Sess. (1999), which resulted in Pub. L. 106-113, does not contain any discussion (other than the incorporated language) of S. 1948. A section-by-section analysis of S. 1948, however, was printed in the Congressional Record at the request of Senator Lott, See 145 Cong. Rec. S14,708-26 (1999)(daily ed. Nov. 17, 1999).

UNITED STATES PATENT AND TRADEMARK OFFICE

UNITED STATES DEPARTMENT OF COMMERCE
United States Patent and Trademark Office
Address: COMMISSIONER FOR PATENTS
P.O. Box 1450
Alexandria, Virginia 22313-1450
www.uspto.gov

FOLEY AND LARDNER LLP
SUITE 500
3000 K STREET NW
WASHINGTON, DC 20007

Mail Date: 04/21/2010

Applicant	: Robert L. Donaldson	: DECISION ON REQUEST FOR
Patent Number	: 7509647	: RECALCULATION of PATENT
Issue Date	: 03/24/2009	: TERM ADJUSTMENT IN VIEW
Appliction No	: 10/152,634	: OF WYETH AND NOTICE OF INTENT TO
Filed	: 05/23/2002	: ISSUE CERTIFICATE OF CORRECTION
		:

The Request for Recalculation is **GRANTED** to the extent indicated.

The patent term adjustment has been determined to be **1330** days. The USPTO will *sua sponte* issue a certificate of correction reflecting the amount of PTA days determined by the recalculation.

Prior to the issuance of the certificate of correction, the USPTO will afford patentee an opportunity to be heard and request reconsideration. Accordingly, patentee has **one month or thirty (30) days**, whichever is longer, to file a request for reconsideration of this patent term adjustment calculation. See 35 U.S.C. 154(b)(3)(B)(ii) and 37 CFR 1.322(a)(4). No extensions of time will be granted under 37 CFR 1.136.

Patentee should use document code PET.OP if electronically filing a request for reconsideration of this patent term adjustment calculation. The patentee must also include the information required by 37 CFR 1.705(b)(2) and the fee required by 37 CFR 1.18(e). If patentee does not file a timely request for reconsideration of this patent term adjustment calculation including the information required by 37 CFR 1.705(b)(2) and the fee required by 37 CFR 1.18(e), the USPTO will issue a certificate of correction reflecting the PTA determination noted above.

Patentee should be aware that in order to preserve the right to review in the United States District Court for the District of Columbia of the USPTO patent term adjustment determination, patentee must ensure that he or she also take the steps required under 35 U.S.C. 154(b)(4)(A) in a timely manner. Nothing in the request for recalculation should be construed as providing an alternative time frame for commencing a civil action under 35 U.S.C. 154(b)(4)(A).

Any questions concerning this decision should be directed to the Office of Patent Legal Administration at 571-272-7702.

UNITED STATES PATENT AND TRADEMARK OFFICE

COMMISSIONER FOR PATENT
UNITED STATES PATENT AND TRADEMARK OFFIC
P.O. BOX 1450
ALEXANDRIA, VA 22313-1450
www.uspto.go

Paper No. 09

Nelson H. Shapiro
EMERSON ELECTRIC CO
PATENT DEPARTMENT STATION 2826
8000 WEST FLORISSANT
ST. LOUIS MO 63136

MAY 17 2004

In re Application of:	:	
Otsuka, *et al.*	:	DECISION ON PETITION TO WITHDRAW HOLDING OF ABANDONMENT
Application No. 10/152,638	:	
Filed: May 23, 2002	:	
Attorney Docket No.: XA-9663	:	

This is a decision on the request vacate the Notice of Abandonment filed on December 02, 2003. The request is being treated as a petition filed under 37 C.F.R. § 1.181, requesting withdrawal of the holding of abandonment of the above-identified application. A petition fee is not required.

The petition is **granted.**

The application was held abandoned for the applicant's apparent failure to timely respond to the Office action mailed May 01, 2003. A Notice of Abandonment was mailed on November 17, 2003.

Petitioner asserts that a response, including, *inter alia,* an amendment, a petition for a three-month extension of time, a check in the amount of $950.00 and a check in the amount of $86.00, was timely filed in the U.S. Patent and Trademark Office (PTO) on Monday, November 03, 2003 (November 01, 2003, was on a Saturday). To support this assertion, petitioner has submitted a copy of the response to the Office action and a copy of a return postcard that properly identifies and acknowledges receipt of the response by the Patent and Trademark Office on November 03, 2003.

A review of the application file record reveals that the above-identified response is not of record in the application file and cannot be located. However, M.P.E.P. § 503 states that "A postcard receipt which itemizes and properly identifies the items which are being filed serves as *prima facie* evidence of receipt in the PTO of all the items listed thereon on the date stamped thereon by the PTO." Additionally, the application file fee record reveals that the checks included with the response were processed by the PTO on November 05, 2003. As such, the evidence provided indicates that the response was timely received in the PTO on November 03, 2003, but lost after receipt thereof.

For the above stated reason, the request is granted. The Notice of Abandonment is hereby vacated and the holding of abandonment withdrawn. The application is restored to pending status.

The copy of the response submitted with the instant petition, is accepted since the response originally submitted was apparently lost.

The application file is being forwarded to the Technology Center 2800 support staff for entry of the response. From there, the application will be forwarded to the examiner for appropriate action.

Inquiries regarding this decision should be directed to Lissi Mojica Marquis at (571) 272-1596.

Sharon A. Gibson, Director
Technology Center 2800
Semiconductors, Electrical and Optical
Systems and Components

10152-650

SPE RESPONSE FOR CERTIFICATE OF CORRECTION

Paper No.: _____

DATE : 5/4/05

TO SPE OF : ART UNIT_____

SUBJECT : Request for Certificate of Correction on Patent No.: 6826425

A response is requested with respect to the accompanying request for a certificate of correction.

Please complete this form and return with file, within 7 days to:
Certificates of Correction Branch - PK 3-915
Palm location **7580** - Tel. No. 305-8309

With respect to the change(s) requested, correcting Office and/or Applicant's errors, should the patent read as shown in the certificate of correction? No new matter should be introduced, nor should the scope or meaning of the claims be changed.

Please check claims

Thank You For Your Assistance

Certificates of Correction Branch

The request for issuing the above-identified correction(s) is hereby:
Note your decision on the appropriate box.

- ☐ **Approved** — All changes apply.
- **Approved in Part** — Specify below which changes **do not** apply.
- ☒ **Denied** — State the reasons for denial below.

Comments: 5/8/5

All changes for Columns 27 & 28 are off by one line due to the line number being misplaced in the patent. (Although the changes are correct & would be entered if the correct line number was used. For example Column 27 line 27 should be Column 27 line 28.)

In addition, according to the Exams Amdt of 8/26/04, the following new paragraph should be entered in Column 28, line 40
-- Comparing the change in patient pathophysiological status to an indicator threshold corresponding to a quantifiable physiological measure indicative of atrial fibrillation; and --

ANGELA D. SYKES
SUPERVISORY PATENT EXAMINER
TECHNOLOGY CENTER 3700

Art Unit

PTOL-306 (REV. 7/03)

U.S. DEPARTMENT OF COMMERCE Patent and Trademark Office

PTO/SB/44 (04-04)
Approved for use through 04/30/2007. OMB 0651-0033
U.S. Patent and Trademark Office; U.S. DEPARTMENT OF COMMERCE
Under the Paperwork Reduction Act of 1995, no persons are required to respond to a collection of information unless it displays a valid OMB control number.
(Also Form PTO-1050)

UNITED STATES PATENT AND TRADEMARK OFFICE
CERTIFICATE OF CORRECTION

PATENT NO. : 6,826,425

DATED : November 30, 2004

INVENTOR(S) : Bardy, Gust H.

It is certified that error appears in the above-identified patent and that said Letters Patent is hereby corrected as shown below:

Column 27, line 27 "lent patient information; and" should read --lent patient information--;

Column 27, line 28, insert the following paragraph:

--a threshold comparison module comparing the change in patient pathophysiological status on an indicator threshold corresponding to a quantifiable physiological measure indicative of atrial fibrillation; and--.

Column 27, line 28, "an analysis module evaluating an absence, an onset, a" should read --an analysis module determining an onset, a--;

Column 27, lines 30 to 31, cancel the text "change in patient pathophysiological status" and insert --comparison of the status to the indicator threshold--.

Column 28, line 38, "mation; and" should read --mation--;

Column 28, line 39, cancel the text "evaluating an absence," and insert --determining--;

Column 28, lines 41 to 42, cancel the text "change in patient pathophysiological status" and insert --comparison of the status to the indicator threshold.--.

MAILING ADDRESS OF SENDER:
Law Offices of Patrick J.S. Inouye

810 Third Ave., Ste 258
Seattle, WA 98104

PATENT NO: 6,826,425

No. of additional copies

This collection of information is required by 37 CFR 1.322, 1.323, and 1.324. The information is required to obtain or retain a benefit by the public which is to file (and by the USPTO to process) an application. Confidentiality is governed by 35 U.S.C. 122 and 37 CFR 1.14. This collection is estimated to take 1.0 hour to complete, including gathering, preparing, and submitting the completed application for to the USPTO. Time will vary depending upon the individual case. Any comments on the amount of time you require to complete this form and/or suggestions for reducing this burden, should be sent to the Chief Information Officer, U.S. Patent and Trademark Office, U.S. Department of Commerce, P.O. Box 1450, Alexandria, VA 22313-1450. DO NOT SEND FEES OR COMPLETED FORMS TO THIS ADDRESS. **SEND TO: Attention Certificate of Corrections Branch, Commissioner for Patents, P.O. Box 1450, Alexandria, VA 22313-1450.**

If you need assistance in completing the form, call 1-800-PTO-9199 and select option 2.

potential impact of other disorders will be, not only the monitoring of atrial fibrillation onset and offset and the ventricular rate during atrial fibrillation, but the sequencing of change and the temporal evolution of physiological measures, for example respiratory rate, arterial oxygenation, ST segment evolution and cardiac output, to reflect the pathophysiological consequences of atrial fibrillation onset, progression or regression in other disease processes.

Finally, the benefit of this invention tempers therapy of atrial fibrillation in a measured and clinically balanced fashion comparable to the management afforded by expert human cardiac care.

While the invention has been particularly shown and described as referenced to the embodiments thereof, those skilled in the art will understand that the foregoing and other changes in form and detail may be made therein without departing from the spirit and scope of the invention.

What is claimed is:

1. A system for providing diagnosis and monitoring of atrial fibrillation for use in automated patient care, comprising:

a comparison module receiving a diagnosis of atrial fibrillation and comparing at least one recorded physiological measure to at least one other recorded physiological measure on a substantially regular basis in response to the atrial fibrillation diagnosis to quantify a change in patient pathophysiological status for equivalent patient information; and

an analysis module evaluating an absence, an onset, a progression, a regression, and a status quo of atrial fibrillation dependent upon the change in patient pathophysiological status.

2. A system according to claim 1, further comprising:

a management module for managing the atrial fibrillation diagnosis by controlling at least one of ventricular rate response and normal sinus rhythm.

3. A system according to claim 1, further comprising:

a database module retrieving the at least one recorded physiological measure and the at least one other recorded physiological measure from monitoring sets stored in a database.

4. A system according to claim 3, further comprising:

a server system collecting the at least one recorded physiological measure and the at least one other recorded physiological measure into each monitoring set recorded on a substantially continuous basis or derived therefrom.

5. A system according to claim 4, further comprising:

at least one of an implantable medical device and an external medical device recording the at least one recorded physiological measure and the at least one other recorded physiological measure.

6. A system according to claim 1, further comprising:

the analysis module evaluating an absence, an onset, a progression, a regression, and a status quo of diseases other than atrial fibrillation dependent upon the change in patient pathophysiological status.

7. A system according to claim 1, further comprising:

a diagnostic module comparing at least one recorded quality of life measure to at least one other recorded quality of life measure on a substantially regular basis to qualify a change in patient pathophysiological status.

8. A system according to claim 1, further comprising:

a stored stickiness indicator defined for at least one physiological measure corresponding to a temporal boundary on one of patient diagnosis and treatment;

a diagnostic module timing each change in patient pathophysiological status for the equivalent patient information and determining one of a revised patient diagnosis and treatment responsive to each change in patient pathophysiological status with a timing exceeding the stickiness indicator.

9. A system according to claim 1, further comprising:

a diagnostic module comparing the change in patient pathophysiological status to a reference baseline comprising recorded physiological measures recorded during an initial time period.

10. A system according to claim 1, further comprising:

a diagnostic module comparing the change in patient pathophysiological status to equivalent patient information from at least one of an individual patient, a peer group, and a overall patient population.

11. A system according to claim 1, further comprising:

a diagnostic module grading the change in patient pathophysiological status on a fixed scale based on a degree of deviation from a pre-defined indicator threshold and performing a summation over a plurality of the graded changes to determine an overall change in patient pathophysiological status.

12. A system according to claim 1, further comprising:

a diagnostic module determining probabilistic weightings of the change in patient pathophysiological status on a statistical deviation and trends via linear fits from a pre-defined indicator threshold and performing a summation over a plurality of the probabilistic weightings to determine an overall change in patient pathophysiological status.

13. A method for providing diagnosis and monitoring of atrial fibrillation for use in automated patient care, comprising:

receiving a diagnosis of atrial fibrillation;

comparing at least one recorded physiological measure to at least one other recorded physiological measure on a substantially regular basis in response to the atrial fibrillation diagnosis to quantify a change in patient pathophysiological status for equivalent patient information; and

evaluating an absence, an onset, a progression, a regression, and a status quo of atrial fibrillation dependent upon the change in patient pathophysiological status.

14. A method according to claim 13, further comprising:

managing the atrial fibrillation diagnosis by controlling at least one of ventricular rate response and normal sinus rhythm.

15. A method according to claim 13, further comprising:

retrieving the at least one recorded physiological measure and the at least one other recorded physiological measure from monitoring sets stored in a database.

16. A method according to claim 15, further comprising:

collecting the at least one recorded physiological measure and the at least one other recorded physiological measure into each monitoring set recorded on a substantially continuous basis or derived therefrom.

17. A method according to claim 16, further comprising:

recording the at least one recorded physiological measure and the at least one other recorded physiological measure with at least one of an implantable medical device and an external medical device.

18. A method according to claim 13, further comprising:

evaluating an absence, an onset, a progression, a regression, and a status quo of diseases other than atrial fibrillation dependent upon the change in patient pathophysiological status.

19. A method according to claim 13, further comprising:

comparing at least one recorded quality of life measure to at least one other recorded quality of life measure on a

5/8/05, EAST Version: 2.0.1.4

EXAMINER'S AMENDMENT

An examiner's amendment to the record appears below. Should the changes and/or additions be unacceptable to applicant, an amendment may be filed as provided by 37 CFR 1.312. To ensure consideration of such an amendment, it MUST be submitted no later than the payment of the issue fee.

Authorization for this examiner's amendment was given in a telephone interview with Patrick Inouye on 8/17/04.

The application has been amended as follows:

In claim 1, line 7, "and" has been deleted. After line 7, the following new paragraph has been inserted

--a threshold comparison module comparing the change in patient pathophysiological status to an indicator threshold corresponding to a quantifiable physiological measure indicative of atrial fibrillation; and--.

In line 8, "evaluating an absence," has been deleted and --determining-- has been inserted. In line 9, "change in patient pathophysiological status" has been deleted and the following inserted --comparison of the status to the indicator threshold--.

Claims 2, 15, and 28-38 have been canceled.

In claim 14, line 7, "and" has been deleted. After line 7, the following new paragraph has been inserted

--comparing the change in patient pathophysiological status to an indicator threshold corresponding to a quantifiable physiological measure indicative of atrial fibrillation; and--.

OIPE JC112
SEP 0 9 2004
PATENT & TRADEMARK OFFICE

1771
Fw

Attorney Docket No.: HANE-002

PET DEC

IN THE UNITED STATES
PATENT AND TRADEMARK OFFICE

Serial No.: **10/152,660**)
Patent No.: **Not Applicable.**)
Filed: **5/20/2002**)
Invention: **Protection System**)
1st Inventor: **Hanes, Douglas**)
Examiner: **Singh, Arti R.**)
Group Art Unit: **1771**)

REQUEST FOR WITHDRAWAL AS ATTORNEY

Approved DEC - 3 2004
JMStone
Jacqueline M. Stone, Director
Technology Center 1700

To: **Commissioner for Patents**
P.O. Box 1450
Alexandria, VA 22313-1450

Dear Commissioner:

I, Michael S. Neustel, (41,221) hereby apply to withdraw as attorney for the above-identified patent application. This application for withdrawal will not prejudice the Applicant in this matter. Attorney has given due notice to the Applicant of his withdrawal and has delivered to the Applicant all papers/property in the Attorney's file concerning the prosecution of the application.

The reason(s) for this request are:

[ ] Practitioner has been discharged by client.

[X] Client knowingly and freely assents to termination of the employment.

[ ] Client has failed to pay one or more bills rendered by the practitioner for an unreasonable period of time.

[ ] Client has failed to pay a retainer in advance of the performance of legal services and/or payment of USPTO fees.

Please change the correspondence address and direct all future correspondence to:

Douglas Hanes
1446 Highview Avenue
Eagan, MN 55121
Telephone: (612) 701-9693 (651) 687-9725

Respectfully submitted,

September 3, 2004
Date

Michael S. Neustel (Reg. No. 41,221)
NEUSTEL LAW OFFICES, LTD
2534 South University Drive, Suite No. 4
Fargo, North Dakota 58103
Telephone: (701) 281-8822
Facsimile: (701) 237-0544
e-mail: michael@neustel.com

Copy: Douglas Hanes

UNITED STATES PATENT AND TRADEMARK OFFICE

Commissioner for Patents
United States Patent and Trademark Office
P.O. Box 1450
Alexandria, VA 22313-1450
www.uspto.gov

FITZPATRICK CELLA HARPER & SCINTO
30 ROCKEFELLER PLAZA
NEW YORK, NY 10112

COPY MAILED

JUN 0 2 2004

OFFICE OF PETITIONS

ON PETITION

In re Application of :
Kazutaka Yanagita, et al. :
Application No. 10/152,690 :
Filed: May 23, 2002 :
Attorney Docket No. 00862.022605 :

This is a decision on the petition, filed June 1, 2004, under 37 CFR 1.313(c)(2) to withdraw the above-identified application from issue after payment of the issue fee.

The petition is **GRANTED**.

The above-identified application is withdrawn from issue for consideration of a submission under 37 CFR 1.114 (request for continued examination). See 37 CFR 1.313(c)(2).

Petitioner is advised that the issue fee paid on April 30, 2004, in the above-identified application cannot be refunded. If, however, the above-identified application is again allowed, petitioner may request that it be applied towards the issue fee required by the new Notice of Allowance. [1]

Telephone inquiries relating to this decision should be directed to the undersigned at (703) 305-9220.

The application is being referred to Technology Center AU 2825 for further processing of the request for continued examination under 37 CFR 1.114.

Sherry D. Brinkley
Petitions Examiner
Office of Petitions
Office of the Deputy Commissioner
for Patent Examination Policy

[1] The request to apply the issue fee to the new Notice may be satisfied by completing and returning the new Issue Fee Transmittal Form PTOL-85(b), which includes the following language thereon: "Commissioner for Patents is requested to apply the Issue Fee and Publication Fee (if any) or re-apply any previously paid issue fee to the application identified above." Petitioner is advised that, whether a fee is indicated as being due or not, the Issue Fee Transmittal Form **must** be completed and timely submitted to avoid abandonment. Note the language in bold text on the first page of the Notice of Allowance and Fee(s) Due (PTOL-85).

UNITED STATES PATENT AND TRADEMARK OFFICE

Commissioner for Patents
United States Patent and Trademark Office
P.O. Box 1450
Alexandria, VA 22313-1450
www.uspto.gov

February 3, 2009

Marina F. Cunningham
McCormick, Paulding & Huber LLP
Cityplace II
185 Asylum Street
Hartford, CT 06103-3402

Patent No.: 7,429,300 B2
Application No.: 10/152,697
Inventor(s): Junji Kido, et al.
Issued: September 30, 2008
Title: **SUCCESSIVE VAPOUR DEPOSITION SYSTEM, VAPOUR DEPOSITION SYSTEM, AND VAPOUR DEPOSITION PROCESS**

Re: Request for Certificate of Correction

Consideration has been given your request for the issuance of a certificate of correction for the above-identified patent under the provisions of Rule(s) 1.322 and/or 1.323.

Assignees' names and addresses (assignment data) printed in a patent, are based *solely* on information supplied in the appropriate space for identifying the assignment data, i.e., item 3 of the Issue Fee Transmittal Form PTOL-85B. Granting of a request under 37 CFR 3.81(b) is required to correct applicant's error providing ***incorrect or erroneous*** assignment data, *before* issuance of a Certificate of Correction, under 37 CFR 1.323 *(see Manual of Patent Examining Procedures (M.P.E.P) Chp.1400, sect. 1481).* This procedure is required *at any time after the issue fee is paid*, including after issuance of the patent.

In view of the foregoing, your request, in this matter, is hereby denied.

A request to correct the Assignee under 37 CFR 3.81(b) should include:

A. **the processing fee set forth in 37 CFR 1.117(h) (currently $130);**
B. a statement that the failure to include the correct assignee name on the PTOL-85B was inadvertent; and
C. a copy of the Notice of Recordation of Assignment Document, reflecting the reel and frame number where the assignment(s) is recorded and/or reflecting proof of *the date* the assignment was submitted for recordation.

In the Request, Applicant(s) may request that the file be forwarded to Certificates of Correction Branch, for issuance of a Certificate of Correction, if the Request is granted.

Any request under 37 CFR 3.81(b) should be directed to the following address or facsimile number:

By mail:	Mail Stop PETITIONS Commissioner for Patents Post Office Box 1450 Alexandria, VA 22313-1450
By hand:	Customer Service Window Mail Stop Petitions Randolph Building 401 Dulany Street Alexandria, VA 22314
By fax:	(571) 273-0025 ATTN: Office of Petitions

If a fee (currently $100) was previously submitted for consideration of a Request for Certificate of Correction, under CFR 1.323, to correct assignment data, no additional fee is required.

Virginia Tolbert
For Mary Diggs, Supervisor
Decisions & Certificate of Correction Branch
(703) 305-8309 or (703) **308-9390 ext 113**

vt

UNITED STATES PATENT AND TRADEMARK OFFICE

Commissioner for Patents
United States Patent and Trademark Office
P.O. Box 1450
Alexandria, VA 22313-1450
www.uspto.gov

MCCORMICK, PAULDING & HUBER
CITY PLACE II
185 ASYLUM STREET
HARTFORD, CT 06103-3402

COPY MAILED

MAR 1 7 2009

OFFICE OF PETITIONS

In re Patent No. 7,429,300	:	
Issue Date: September 30, 2008	:	
Application No. 10/152,697	:	ON PETITION
Filed: May 22, 2002	:	
Attorney Docket No. 1930-11	:	

This is a decision on the petition filed February 13, 2009, which is being treated as a request under 37 CFR 3.81(b)[1] to correct the name of the assignee on the front page of the above-identified patent by way of a Certificate of Correction.

The request is **GRANTED**.

Telephone inquiries concerning this decision may be directed to Alicia Kelley at (571) 272-6059. Inquiries regarding the issuance of a certificate of correction should be directed to the Certificate of Correction Branch at (571) 272-4200.

The Certificates of Correction Branch will be notified of this decision granting the petition under 37 CFR 3.81(b) and directing issuance of the requested Certificate of Correction.

/SDB/

Sherry D. Brinkley
Petitions Examiner
Office of Petitions

---

[1] *See* MPEP 1309, subsection II; and Official Gazette of June 22, 2004.

UNITED STATES PATENT AND TRADEMARK OFFICE

COMMISSIONER FOR PATENT
UNITED STATES PATENT AND TRADEMARK OFFIC
WASHINGTON, D.C. 20231
www.uspto.go

Paper No. 6

Benjamin E. Urcia
BACON & THOMAS, PLLC
625 Slater Lane, Fourth Floor
Alexandria, VA 22314

JAN 14 2003

In re Application of:	:	
TU *et al.*	:	DECISION ON PETITION
Application No. 10/152,718	:	TO MAKE SPECIAL
Filed: May 23, 2002	:	
Attorney Docket No.: TUYA3001/EM/BEU	:	

This is a decision on the petition under 37 C.F.R. § 1.102(c), filed December 16, 2002, to make the above-identified application special under the accelerated examination procedure set forth in the Manual of Patent Examining Procedure (M.P.E.P.), § 708.02, Item V: Environmental Quality and Item VI: Energy.

The petition is **denied.**

A grantable petition under 37 C.F.R. § 1.102(c), and in accordance with M.P.E.P. § 708.02, Item V, for inventions which materially enhance the quality of the environment of mankind by contributing to the restoration or maintenance of the basic life-sustaining natural elements, i.e., air, water, and soil, must be accompanied by statements under 37 C.F.R. § 1.102 by the applicant, assignee, or an attorney/agent registered to practice before the Office explaining how the invention contributes to the restoration or maintenance of one of these life-sustaining elements. No fee is required for this petition.

A grantable petition under 37 C.F.R. § 1.102(c), and in accordance with M.P.E.P. § 708.02, Item VI, for inventions which materially contribute to (A) the discovery or development of energy resources, or (B) the more efficient utilization and conservation of energy resources, must be accompanied by statements under 37 C.F.R. § 1.102 by the applicant, assignee, or an attorney/agent registered to practice before the Office explaining how the invention materially contributes to category (A) or (B) set forth above. No fee is required for this petition.

Petitioner asserts that the present invention materially enhances the quality of the environment of mankind. Petitioner further asserts that the invention does not generate pollutants and that this will enhance the quality of the environment of mankind. However, the petition does not specifically address the maintenance or restoration of any of the above-identified life-sustaining

elements, and therefore is not a sufficient showing to accord the application special status pursuant to M.P.E.P. § 708.02, Item V.

It is further asserted that the present invention materially contributes to the more efficient utilization and conservation of energy resources because it utilizes available energy in a substantially more efficient manner. However, the petition does not provide information on how the device is any more efficient in the utilization of the available energy. The petition lacks any comparison of the work done by the invention and that of the conventional devices and the input power needed to produce that amount of work. It is noted that a standard to support and quantify the alleged increase in efficiency is lacking in the petition. Thus, the petition is not a sufficient showing to accord the application special status pursuant to M.P.E.P. § 708.02, Item VI.

For the above stated reasons, the petition is inadequate to qualify the application for special status under 37 CFR 1.102(c) and pursuant to M.P.E.P. § 708.02, Item V or Item VI. The petition does not adequately explain how the claimed invention materially contributes to the restoration or maintenance of one of the life-sustaining elements, i.e., air, water and soil, or provide evidence supporting the statement of more efficient utilization and conservation of energy resources over conventional devices. Accordingly, the petition is **denied.**

Should petitioner desire reconsideration, petitioner should supplement this petition by a statement providing the information as outlined above. No further petition fee is required.

Any request for reconsideration must be filed within TWO MONTHS of the date of this decision.

Inquiries regarding this decision should be directed to Clayton E. LaBalle at (703) 308-0519.

Clayton E. LaBalle, Special Programs Examiner
Technology Center 2800
Semiconductors, Electrical and Optical
Systems and Components

UNITED STATES PATENT AND TRADEMARK OFFICE

Commissioner for Patents
United States Patent and Trademark Office
P.O. Box 1450
Alexandria, VA 22313-1450
www.uspto.gov

Paper No. 10

SUNYEN CO., LTD.
5 FL., NO. 212, RUEIGUANG RD.,
NEIHU CHIU, TAIPEI 114
TAIWAN TW TAIWAN

FEB 24 2004

In re Application of	:	
Yu-Ta TU et al.	:	
Application No. 10/152,718	:	**DECISION ON PETITION**
Filed: May 23, 2002	:	**TO MAKE SPECIAL**
Attorney Docket No. TUYA3001/EM/BEU	:	

This is a decision on the renewed petition under 37 C.F.R. § 1.102(c), filed March 14, 2003, to make the above-identified application special.

Petitioner request that the above-identified application be made special under the accelerated examination procedure set forth in Manual of Patent Examining Procedure (M.P.E.P.), Section 708.02, Item V: Environmental Quality and Item VI: Energy.

A grantable petition to make an application special under 37 C.F.R. § 1.102(c) and in accordance with M.P.E.P. § 708.02, Item V, for an invention which materially enhances the quality of the environment of mankind by contributing to the restoration or maintenance of the basic life-sustaining elements – air, water and soil, must be accompanied by statements under 37 C.F.R. § 1.102 by the applicant or his/her attorney or agent explaining how the invention contributes to the maintenance or restoration of one of these life sustaining elements.

The petition asserts that the claimed invention utilizes manual power as the initial energy input and "because the apparatus does not need to be connected to a power grid and does not require fossil fuels in order to produce a useful power output, ... it clearly materially contributes to the restoration and maintenance of air, water, and/or soil."

For the above stated reasons, the petition is GRANTED.

A decision on the petition to be made special under the accelerated examination procedure set forth in Manual of Patent Examining Procedure (M.P.E.P.), Section 708.02, Item VI: Energy is moot.

The application is being forwarded to the examiner for expedited prosecution.

If the examiner can make this application special without prejudice to any possible interfering applications, and he/she should make a rigid search for such, she/he is authorized to do so for the next action. Should the application be rejected, the application will not be considered special for the subsequent action unless the applicant promptly makes a bona fide effort to place the application in condition for allowance, even if it is necessary to have an interview with the examiner to accomplish this purpose.

If the examiner finds any interfering application for the same subject matter, he/she should consider such application simultaneously with this application and should state in the official letter of such application that he/she is taking it out of its turn because of possible interference.

Should an appeal be taken in this application or should this application becomes involved in an interference, consideration of the appeal and the interference will be expedited by all Patent and Trademark Office officials concerned, contingent likewise upon diligent prosecution by the applicant.

After allowance, this application will be given priority for printing. See M.P.E.P. § 1309.

The petition is granted to the extent indicated.

Jose G. Dees, Special Program Examiner
Technology Center 2800
Semiconductors, Electrical and Optical
Systems and Components

UNITED STATES PATENT AND TRADEMARK OFFICE

UNITED STATES DEPARTMENT OF COMMERCE
United States Patent and Trademark Office
Address: COMMISSIONER FOR PATENTS
P.O. Box 1450
Alexandria, Virginia 22313-1450
www.uspto.gov

BACON & THOMAS, PLLC
625 SLATERS LANE
FOURTH FLOOR
ALEXANDRIA, VA 22314-1176

Mail Date: 04/21/2010

Applicant	: Yu-Ta Tu	: DECISION ON REQUEST FOR
Patent Number	: 7602130	: RECALCULATION of PATENT
Issue Date	: 10/13/2009	: TERM ADJUSTMENT IN VIEW
Appliction No	: 10/152,718	: OF WYETH AND NOTICE OF INTENT TO
Filed	: 05/23/2002	: ISSUE CERTIFICATE OF CORRECTION
		:

The Request for Recalculation is **GRANTED** to the extent indicated.

The patent term adjustment has been determined to be **1010** days. The USPTO will *sua sponte* issue a certificate of correction reflecting the amount of PTA days determined by the recalculation.

Prior to the issuance of the certificate of correction, the USPTO will afford patentee an opportunity to be heard and request reconsideration. Accordingly, patentee has **one month or thirty (30) days**, whichever is longer, to file a request for reconsideration of this patent term adjustment calculation. See 35 U.S.C. 154(b)(3)(B)(ii) and 37 CFR 1.322(a)(4). No extensions of time will be granted under 37 CFR 1.136.

Patentee should use document code PET.OP if electronically filing a request for reconsideration of this patent term adjustment calculation. The patentee must also include the information required by 37 CFR 1.705(b)(2) and the fee required by 37 CFR 1.18(e). If patentee does not file a timely request for reconsideration of this patent term adjustment calculation including the information required by 37 CFR 1.705(b)(2) and the fee required by 37 CFR 1.18(e), the USPTO will issue a certificate of correction reflecting the PTA determination noted above.

Patentee should be aware that in order to preserve the right to review in the United States District Court for the District of Columbia of the USPTO patent term adjustment determination, patentee must ensure that he or she also take the steps required under 35 U.S.C. 154(b)(4)(A) in a timely manner. Nothing in the request for recalculation should be construed as providing an alternative time frame for commencing a civil action under 35 U.S.C. 154(b)(4)(A).

Any questions concerning this decision should be directed to the Office of Patent Legal Administration at 571-272-7702.

SPE RESPONSE FOR CERTIFICATE OF CORRECTION

Paper No.: _____

DATE : 9/23/07

TO SPE OF : ART UNIT 2874

SUBJECT : Request for Certificate of Correction for Appl. No.: 10/152733 Patent No.: 6760501

Please respond to this request for a certificate of correction within 7 days.

Please review the requested changes/corrections as shown in the **COCIN** document(s) in the IFW application image. No new matter should be introduced, nor should the scope or meaning of the claims be changed.

Please complete the response (see below) and forward the completed response to scanning using document code **COCX**.

Valerie Jackson
Certificates of Correction Branch
703-308-9390 ext. 114

Thank You For Your Assistance

The request for issuing the above-identified correction(s) is hereby:
Note your decision on the appropriate box.

- ☒ **Approved** — All changes apply.
- ☐ **Approved in Part** — Specify below which changes **do not apply**.
- ☐ **Denied** — State the reasons for denial below.

Comments: Revizwed and approved by Examiner Rojas on 10/5/07. gr

SPE

2874
Art Unit

UNITED STATES PATENT AND TRADEMARK OFFICE

Commissioner for Patents
United States Patent and Trademark Office
P.O. Box 1450
Alexandria, VA 22313-1450
www.uspto.gov

ROBERT A. MClAUCHIAN
KOESUNER, LLP
POST OFFICE BOX 26780
AUSTIN TX 78755

COPY MAILED

JUL 12 2007

OFFICE OF PETITIONS

In re Application of	:	
Thomas E. Drake Jr.	:	
Application No. 10/152,743	:	DECISION GRANTING PETITION
Filed: May 22, 2002	:	UNDER 37 CFR 1.137(b)
Attorney Docket No. 8571:78 CIP	:	

This is a decision on the petition under 37 CFR 1.137(b), filed February 12, 2007, to revive the above-identified application.

The petition is **GRANTED**.

The petition satisfies the conditions for revival pursuant to the provisions of 37 CFR 1.137(b) in that: (1) the reply in the form of the issue and publication fee; (2) the petition fee; and (3) the required statement of unintentional delay have been received. Accordingly, the reply to the Notice of Allowance of March 8, 2006, is accepted as having been unintentionally delayed.

Telephone inquiries concerning this decision should be directed to the undersigned at (571) 272-3208.

This matter is being referred to Patent Publication.

Karen Creasy

Karen Creasy
Petitions Examiner
Office of Petitions

UNITED STATES PATENT AND TRADEMARK OFFICE

COMMISSIONER FOR PATENTS
UNITED STATES PATENT AND TRADEMARK OFFICE
P.O. BOX 1450
ALEXANDRIA, VA 22313-1450
www.uspto.go

Paper No. 8

John T. Kennedy
DORSEY & WHITNEY, LLP
INTELLECTUAL PROPERTY DEPARTMENT
370 SEVENTEENTH STREET, SUITE 4700
DENVER, CO 80202-5647

MAIL

JAN 13 2004

DIRECTOR OFFICE
TECHNOLOGY CENTER 2600

In re application of:
Patrick M. Sheehan, et al.
Application No. 10/152,746
Filed: May 21, 2002
For: SYSTEM AND METHOD FOR PROVIDING PRIVATE IN-BAND DATA TO DIGITAL SET-TOP BOXES IN A BROADCAST ENVIRONMENT

DECISION ON REQUEST TO WITHDRAW FROM RECORD

This is a decision on the request to withdraw as attorney/agent of record filed on October 28, 2003.

A grantable request to withdraw as attorney/agent of record must:
(1) indicate the present mailing address of the attorney(s)/agent(s) who seek(s) to withdraw, and
(2) be signed by each attorney/agent seeking to withdraw or clearly be signed on their behalf, and
(3) be *approved* at least thirty (30) days prior to the maximum extendable period for response to any outstanding Office Action, and
(4) indicate the address to which future correspondence should be mailed.

Petitioner has satisfied the requirements for successfully requesting withdrawal. Accordingly, the request is **GRANTED.**

All of the attorneys/agents of record listed in the Request are withdrawn.

All future correspondence will be directed to the address listed below until such a time as a request for change of address is filed. The application is being returned to TC 2600 central files to await a response to the Office action mailed November 13, 2003.

Krista Zele
Special Program Examiner
Technology Center 2600
Communications

cc: MORRISON & FOERSTER LLP
1650 TYSONS BOULEVARD
SUITE 300
MCLEAN VA 22102

UNITED STATES PATENT AND TRADEMARK OFFICE

Commissioner for Patents
United States Patent and Trademark Office
P.O. Box 1450
Alexandria, VA 22313-1450
www.uspto.gov

Paper No. 17

ANTONELLI, TERRY, STOUT & KRAUS
1300 NORTH SEVENTEENTH STREET
SUITE 1800
ARLINGTON VA 22209-9889

COPY MAILED

AUG 0 6 2004

OFFICE OF PETITIONS

ON PETITION

In re Application of	:
Kazuho Miki et al	:
Application No. 10/152,836	:
Filed: May 23, 2002	:
Attorney Docket No. 566.36054CX2	:

This is a decision on the petition, filed August 5, 2004, under 37 CFR 1.313(c)(2) to withdraw the above-identified application from issue after payment of the issue fee.

The petition is **GRANTED**.

The above-identified application is withdrawn from issue for consideration of a submission under 37 CFR 1.114 (request for continued examination). See 37 CFR 1.313(c)(2).

Petitioner is advised that the issue fee paid on July 12, 2004 in the above-identified application cannot be refunded. If, however, the above-identified application is again allowed, petitioner may request that it be applied towards the issue fee required by the new Notice of Allowance.[1]

Telephone inquiries should be directed to the undersigned at (703) 305-8859.

After receipt of the file in the Office of Petitions, the application will be forwarded to Technology Center AU 2661 for processing of the request for continued examination under 37 CFR 1.114.

Karen Creasy

Karen Creasy
Petitions Examiner
Office of Petitions
Office of the Deputy Commissioner
for Patent Examination Policy

---

[1] The request to apply the issue fee to the new Notice may be satisfied by completing and returning the new Issue Fee Transmittal Form PTOL-85(b), which includes the following language thereon: "Commissioner for Patents is requested to apply the Issue Fee and Publication Fee (if any) or re-apply any previously paid issue fee to the application identified above." Petitioner is advised that, whether a fee is indicated as being due or not, the Issue Fee Transmittal Form **must** be completed and timely submitted to avoid abandonment. Note the language in bold text on the first page of the Notice of Allowance and Fee(s) Due (PTOL-85).

UNITED STATES PATENT AND TRADEMARK OFFICE

Commissioner for Patents
United States Patent and Trademark Office
P.O. Box 1450
Alexandria, VA 22313-1450
www.uspto.gov

WERNER H SCHROEDER
5550 HERON POINT DRIVE
APT 1105
NAPLES, FL 34108

COPY MAILED

JUL 1 8 2005

OFFICE OF PETITIONS

ON PETITION

In re Application of :
Kent Thomas Conwell :
Application No. 10/152,866 :
Filed: May 22, 2002 :
Attorney Docket No. AG1006-001 :

This is a decision on the petition under 37 CFR 1.137(a), filed March 28, 2005, to revive the above-identified application.

The petition is **DISMISSED**.

Any request for reconsideration of this decision must be submitted within TWO (2) MONTHS from the mail date of this decision. Extensions of time under 37 CFR 1.136(a) are permitted. The reconsideration request should include a cover letter entitled "Petition under 37 CFR 1.137(a)." This is **not** a final agency action within the meaning of 5 U.S.C. § 704.

The above-identified application became abandoned for failure to reply in a timely manner to the Notice of Non-Compliant Amendment (37 CFR 1.121) (Notice) mailed April 9, 2004. The Notice set a period for reply of one (1) month from the mail date of the Notice. A three-month extension of time under the provisions of 37 CFR 1.136(a) was obtained. Accordingly, the above-identified application became abandoned on August 10, 2004.

A grantable petition to revive an abandoned application under 37 CFR 1.137(a) must be accompanied by: (1) the required reply (unless previously filed), which may be met by the filing of a continuing application in a nonprovisional application abandoned for failure to prosecute, but must be the payment of the issue fee or any outstanding balance thereof in an application or patent, abandoned or lapsed for failure to pay the issue fee or any portion thereof; (2) the petition fee required by 37 CFR 1.17(l); (3) an adequate showing to the satisfaction of the Commissioner that the entire delay in filing the required reply from the due date for the reply until the filing of a grantable petition pursuant to 37 CFR 1.137(a) was unavoidable; and (4) a terminal disclaimer (and fee as set forth in 37 CFR 1.20(d)) for an application filed prior to June 8, 1995. This petition lacks items (1) and (3).

As to item (1), petitioner has not submitted a proper response to the Notice mailed April 9, 2004 (copy attached).

The showing of record is not sufficient to establish to the satisfaction of the Commissioner that the delay was unavoidable within the meaning of 35 U.S.C. § 133 and 37 CFR 1.137(a). See MPEP 711(c)(III)(c)(2) for a discussion of the requirements for a showing of unavoidable delay.

As to item (3), The USPTO decisions on petitions under 37 CFR 1.137(a) have adopted the

"reasonably prudent person" standard in determining if the delay at issue was "unavoidable." While such decisions are made on a case-by-case basis, a delay caused by an applicant's lack of knowledge or improper application of the patent statute, rules of practice of the MPEP does not constitute an "unavoidable" delay. See Haines v. Quigg, 673 F. Supp. 314, 317, 5 USPQ2d 1130, 1132 (N.D. Ind. 1987), Vincent v. Mossinghoff, 230 USPQ 621, 624 (D.D.C. 1985); Smith v. Diamond, 209 USPQ 1091 (D.D.C. 1981); Potter v. Dann, 201 USPQ 574 (D.D.C. 1978); Ex parte Murray, 1891 Dec. Comm'r Pat. 130, 131 (1891).

35 U.S.C. § 133 states, "Upon failure of the applicant to prosecute the application within six months after any action therein, of which notice has been given or mailed to the applicant, or within such shorter time, not less than thirty days, as fixed by the Commissioner in such action, the application shall be regarded as abandoned by the parties thereto, unless it be shown to the satisfaction of the Commissioner that such delay was unavoidable." (Emphasis added)

Petitioner states that the a reply was submitted on March 7, 2005 by facsimile transmission but reasons that "something went wrong or was amiss in the PTO Fax receiving area," as not all the pages were received, despite the fact that his Fax report indicated that all pages were transmitted. Therefore, petitioner states that the delay was unavoidable since the PTO Fax receiving area was not within his control.

A review of the file record indicates that an Office action was mailed on April 9, 2004, which set a one month extendable time period within which to file a proper reply. In reply, petitioner, on April 21, 2004 submitted an amendment. However, in an Office action mailed July 28, 2004, the April 21, 2004 amendment was still not found to be responsive and set a one month period for reply. The action of July 28, 2004 further indicated that "applicant's response time continues to run from the mail date of the last Notice of Non-Responsive (April 9, 2004). Applicant must submit any required extensions of time when providing the proper submission to avoid abandonment." On August 9, 2004, petitioner submitted an amendment, along with a three month extension of time. Thereafter, on March 7, 2005, petitioner submitted another amendment; however, this amendment was outside the maximum period allowed for reply.

Petitioner's attention is directed to 37 CFR 1.136(a)(1), which reads:

> If an applicant is required to reply within a nonstatutory or shortened statutory time period, applicant may extend the time period for reply up to the earlier of the expiration of any maximum period set by statute or five months after the time period set for reply, if a petition for an extension of time and the fee set in § 1.17(a) are filed."

In view of the above, the maximum period for reply could have been extended up to and including October 9, 2004. Therefore, as the maximum period for reply had expired, the asserted failure of the USPTO to receive all the pages of the facsimile transmission of April 7, 2005 did not cause or contribute to the abandonment of this application. Further, petitioner has yet to file a responsive reply to the April 9, 2004 Office action.

Petitioner is reminded that a petition to revive an application under 37 CFR 1.137(a) cannot be granted where a petitioner has failed to meet his burden of establishing unavoidable delay within the meaning of 37 CFR 1.137(a) and 35 U.S.C. § 133. Haines v. Quigg, 673 F. Supp. 314, 5 USPQ2d 1130 (N.D. Ind. 1987). Under the circumstances, petitioner has not carried his burden of proof to show that the delay was unavoidable as required by statute and by regulations of the U.S. Patent and Trademark Office.

While the showing of record is not sufficient to establish to the satisfaction of the Commissioner that the delay was unavoidable, petitioner is not precluded from obtaining relief by filing a petition pursuant to 37 CFR 1.137(b) on the basis of unintentional delay. A grantable petition pursuant to 37 CFR 1.137(b) must be accompanied by (1) the reply required to the outstanding Office action or notice, unless previously filed; (2) the petition fee as set forth in 37 CFR 1.17(m); (3) a statement that the entire delay in filing the required reply from the due date for the reply until the filing of a grantable petition pursuant to this paragraph was unintentional. The Commissioner may require additional information where there is a question whether the delay was unintentional; and (4) any terminal disclaimer (and fee as set forth in 37 CFR 1.20(d)) required pursuant to paragraph (d) of this section.

The filing of a petition under 37 CFR 1.137(b) cannot be intentionally delayed and therefore must be filed promptly. A person seeking revival due to unintentional delay can not make a statement that the delay was unintentional unless the entire delay, including the delay from the date it was discovered that the application was abandoned until the filing of the petition to revive under 37 CFR 1.137(b), was unintentional. A statement that the delay was unintentional is not appropriate if petitioner intentionally delayed the filing of a petition for revival under 37 CFR 1.137(b).

Further correspondence with respect to this matter should be addressed as follows:

By mail:	Mail Stop PETITIONS Commissioner for Patents Post Office Box 1450 Alexandria, VA 22313-1450
By hand:	Customer Service Window Randolph Building 401 Dulany Street Alexandria, VA 22314
By fax:	(571) 273-8300 ATTN: Office of Petitions

Telephone inquiries concerning this decision should be directed to Wan Laymon at (571) 272-3220.

Frances Hicks

Frances Hicks
Lead Petitions Examiner
Office of Petitions
Office of the Deputy Commissioner
for Patent Examination Policy

Attachment: Examiner's comments

UNITED STATES PATENT AND TRADEMARK OFFICE

Commissioner for Patents
United States Patent and Trademark Office
P.O. Box 1450
Alexandria, VA 22313-1450
www.uspto.gov

PRICE HENEVELD COOPER DEWITT & LITTON
695 KENMOOR, S.E.
P.O. BOX 2567
GRAND RAPIDS MI 49501

COPY MAILED

MAY 27 2005

OFFICE OF PETITIONS

ON PETITION

In re Application of	:
Frank Baron et al	:
Application No. 10/152,875	:
Filed: May 21, 2002	:
Attorney Docket No. PRI13 P312	:

This is a decision on the petition, filed May 17, 2005, under 37 CFR 1.313(c)(3) to withdraw the above-identified application from issue after payment of the issue fee.

The petition is **GRANTED**.

The above-identified application is withdrawn from issue for express abandonment. See 37 CFR 1.313(c)(3).

The application is hereby withdrawn from issue, and the abandonment is hereby recognized.

Telephone inquiries should be directed to the undersigned at (571) 272-3208.

This matter is being referred to Files Repository.

Karen Creasy

Karen Creasy
Petitions Examiner
Office of Petitions
Office of the Deputy Commissioner
for Patent Examination Policy

UNITED STATES PATENT AND TRADEMARK OFFICE

COMMISSIONER FOR PATENTS
UNITED STATES PATENT AND TRADEMARK OFFICE
P.O. BOX 1450
ALEXANDRIA, VA 22313-1450
www.uspto.gov

Paper No. _____

Date : May 26, 2005

TO : Director, Office of Patent Publication

FROM : Office of the Deputy Commissioner for Patent Examination Policy

COPY MAILED

MAY 27 2005

OFFICE OF PETITIONS

SUBJECT : Withdrawal from Issue of

Applicant(s) :Frank Baron et al
Application No. :10/152,875
Filed :May 21, 2002

The above-identified application has been assigned Patent No. 6,899,536 and an issue date of May 31, 2005.

It is hereby directed that this application be withdrawn from issue at the request of the applicant.

Do not refund the issue fee.

The following erratum should be published in the Official Gazette if the above-identified application is published in the OG of May 31, 2005:

> "All reference to Patent No. 6,899,536 to Frank Baron et al of Michigan for CLAMPING ASSEMBLY FOR TWO PLATEN DIE CAST MACHINE appearing in the Gazette of May 31, 2005 should be deleted since no patent was granted."

Karen Creasy

Karen Creasy
Petitions Examiner
Office of Petitions
Office of the Deputy Commissioner
for Patent Examination Policy

cc: Paul Harrison, MDW-4B03, (FAX-273-5468
Deneise Boyd, MDE-3D39 (FAX-273-5124)
Mary Louise McAskill, ST-8C15 (FAX 305-4372)
Niomi Farmer, ST-8C14 (FAX-305-4372)
Mary E. Johnson (Cookie), MDE-7C71 (FAX 273-0038)
Duane Davis P/OPC MDE-7D89
Tamara Greene, ST-8C13

UNITED STATES PATENT AND TRADEMARK OFFICE

Commissioner for Patents
United States Patent and Trademark Office
P.O. Box 1450
Alexandria, VA 22313-1450
www.uspto.gov

Paper No. 12

CIBA VISION CORPORATION
ATTN: RICHARD GEARHART
11460 JOHNS CREEK PARKWAY
DULUTH GA 30097-1556

COPY MAILED

MAY 0 3 2004

OFFICE OF PETITIONS

In re Application of :
Charles Auxilium Francis, et al. :
Application No. 10/152,942 :
Filed: May 22, 2002 :
Attorney Docket No. CL/V-32019A :

ON PETITION

This is a decision on the petition under 37 CFR 1.137(b), filed April 16, 2004, to revive the above-identified application.

The petition is **GRANTED.**

The above-identified application became abandoned for failure to reply in a timely manner to the non-final Office action mailed August 20, 2003, which set a shortened statutory period for reply of three (3) months. No extensions of time under the provisions of 37 CFR 1.136(a) were obtained. Accordingly, the application became abandoned on November 21, 2003.

The Change of Correspondence Address has been accepted and recorded.

The application file is being forwarded to Technology Center 2800, Art Unit 2873 for further processing.

Telephone inquiries concerning this decision should be directed to the undersigned at (703) 306-5594.

Retta Williams

Retta Williams
Petitions Examiner
Office of Petitions
Office of the Deputy Commissioner
for Patent Examination Policy

UNITED STATES PATENT AND TRADEMARK OFFICE

Technology Center 1700

rvk

Mailed: APR 2 2 2004 Paper Number: 7

In re application of :
Ramesh Keshavaraj : DECISION ON
Serial No. 10/152,953 : PETITION
Filed: May 21, 2002 :
For: FABRIC BLANK FOR MULTI-SEGMENT AIR BAG TETHER CONSTRUCTION :

This is a response to the RESPONSE TO NOTICE OF ABANDONMENT, filed December 05, 2003. The requester asks that the abandonment, as set forth in the Notice of Abandonment of September 24, 2003, for failure to timely file a proper response to the Office letter dated March 17, 2003 be withdrawn. The requester asserts that applicant timely filed a proper response to the Office letter of March 17, 2003 on September 16, 2003.

DECISION

The instant request is accepted as a petition under 37 C.F.R. 1.181 (no fee).

A review of the requester's evidence provided indicates that the request has merit. The evidence presented is sufficient to establish that applicant did in fact reply to the Office letter of March 17, 2003 in a timely manner. The submitted evidence are copies of the following documents : (1) Petition for Extension of Time; (2) Amendment and Response with attached Terminal Disclaimer; and (3) Declaration under 37 CFR 1.132, all of which include an executed Certificate of Mailing dated September 16, 2003. Also, attached is a copy of the returned postcard dated September 22, 2003 indicating receipt by the USPTO.

Therefore, the abandonment is hereby withdrawn, and the application is returned to pending status. The application shall be forwarded to the Technical Support Staff

for entering of the Response/Declaration/Terminal Disclaimer and then forwarded to the examiner for prompt consideration.

The Petition is **GRANTED**.

JMStone

Jacqueline Stone, Director
Technology Center 1700
Chemical and Materials Engineering

MILLIKEN & COMPANY
P.O. BOX 1927
SPARTANBURG, SC 29304

UNITED STATES PATENT AND TRADEMARK OFFICE

Commissioner for Patents
United States Patent and Trademark Office
P.O. Box 1450
Alexandria, VA 22313-1450
www.uspto.gov
DIW May-07

RAJ S. DAVE
MORRISON & FOERSTER LLP
SUITE 5500
2000 PENNSYLVANIA AVENUE N.W.
WASHINGTON DC 20006-1888

COPY MAILED

MAY 03 2007

OFFICE OF PETITIONS

In re Application of	:	
Kim et al.	:	
Application No. 10/152,977	:	ON PETITION
Filed: 23 May, 2002	:	
Atty Dckt No. 300602002800	:	

This is a decision on the petition filed on 5 February, 2007, under 37 CFR 1.137(a).[1] to revive the above-identified application which is first treated as a petition to withdraw the holding of abandonment.

The petition is **dismissed**.

Any request for reconsideration of this decision must be submitted within **TWO (2) MONTHS** from the mail date of this decision. Extensions of time under 37 CFR 1.136(a) are permitted. The reconsideration request should include a cover letter entitled "Renewed Petition under 37 CFR 1.137(a)" or "Renewed Petition to withdraw the holding of abandonment," or as discussed below "Renewed Petition under 37 CFR 1.137(b)."

---

[1] A grantable petition under 37 CFR 1.137(a) must be accompanied by:

(1) the required reply, unless previously filed; In a nonprovisional application abandoned for failure to prosecute, the required reply may be met by the filing of a continuing application. In a nonprovisional utility or plant application filed on or after June 8, 1995, and abandoned for failure to prosecute, the required reply may also be met by the filing of a request for continued examination in compliance with § 1.114. In an application or patent, abandoned or lapsed for failure to pay the issue fee or any portion thereof, the required reply must be the payment of the issue fee or any outstanding balance thereof. In an application, abandoned for failure to pay the publication fee, the required reply must include payment of the publication fee.

(2) the petition fee as set forth in 37 CFR 1.17(l);

(3) a showing to the satisfaction of the Commissioner that the entire delay in filing the required reply from the due date for the reply until the filing of a grantable petition pursuant to 37 CFR 1.137(a) was unavoidable; and

(4) any terminal disclaimer (and fee as set forth in 37 CFR 1.20(d)) required pursuant to 37 CFR 1.137(c)).

The application became abandoned on 8 November, 2003, for failure to timely file a response to the non-final Office action mailed on 7 August, 2003, which set a three (3) month shortened statutory period for reply. No extensions of the time for reply in accordance with 37 CFR 1.136(a) were obtained. Notice of Abandonment was mailed on 12 March, 2004.

Petitioners assert unavoidable delay in that the Office action mailed on 7 August, 2003, was never received. Petitioners further state:

> The Examiner in the matter contacted the Agent of Record to confirm whether non-response to the Official Action of August 7, 2003, was intentional. The Agent of Record advise that it was not. The Agent of Record filed a communication by on March 23, 2004, requesting the issuance of a new action establishing a new response deadline. A response to this request was never received.

PETITION TO WITHDRAW THE HOLDING OF ABANDONMENT

Petitioner asserts that the Office communication mailed on 7 August, 2003, was never received. A review of the record indicates no irregularity in the mailing of the Office action, and in the absence of any irregularity in the mailing, there is a strong presumption that the Office action was properly mailed to the address of record. This presumption may be overcome by a showing that the Office action was not in fact received. The showing required to establish the failure to receive an Office action must include a statement from the practitioner stating that the Office communication was not received by the practitioner and attesting to the fact that a search of the file jacket and docket records indicates that the Office communication was not received. A copy of the docket record where the non-received Office communication would have been entered had it been received and docketed must be attached to and referenced in practitioner's statement.[2] The showing outlined above may not be sufficient if there are circumstances that point to a conclusion that the Office communication may have been lost after receipt rather than a conclusion that the Office action was lost in the mail (*e.g.*, if the practitioner has a history of not receiving Office actions).

---

[2] M.P.E.P. § 711.03(c); See Notice entitled "Withdrawing the Holding of Abandonment When Office Actions Are Not Received," 1156 O.G. 53 (November 16, 1993).

37 CFR 1.181(f) provides that, inter alia, except as otherwise provided, any petition not filed within 2 months from the action complained of may be dismissed as untimely. Therefore, any petition (under 37 CFR 1.181) to withdraw the holding of abandonment not filed within 2 months of the mail date of a notice of abandonment (the action complained of) may be dismissed as untimely. 37 CFR 1.181(f).

The petition to withdraw the holding of abandonment is dismissed as untimely. The showing of record is that petitioners knew no later than 23 March, 2004, that the application was abandoned, yet the present petition was not filed until nearly three (3) years had elapsed. This protracted period of delay is suggestive of a lack of diligence on the part of petitioners, which would preclude the withdrawal of the holding of abandonment.

Nevertheless, if petitioners can provide a copy of the letter filed on 23 March, 2004, requesting the withdrawal of the holding of abandonment, petitioners should submit a copy of that letter as evidence that petitioners timely attempted to petition for a withdrawal of the holding of abandonment.

Moreover, it is noted that petitioners' counsel's address in the petition, and in the response filed on 12 June, 2003, to the Office action mailed on 13 March, 2003, is: 1650 Tysons Blvd., Suite 300, McLean, VA 22102 (hereinafter "the Northern Virginia address"), while the address of record, as provided on the Application Data Sheet filed with the original application papers on 23 May, 2002, is: Suite 5500, 2000 Pennsylvania Avenue N.W., Washington, D.C. 20006-1888 (hereinafter "the Washington, D.C. address"). As such, the showing of record suggests that counsel may have relocated from the Washington, D.C. address to the Northern Virginia address prior to the mailing of the non-final Office action of 7 August, 2003. It is noted that the docket report filed with the present petition further lists the "Office" for all of the correspondence as "NOVA" which is taken to mean Northern Virginia. As such, it is not clear whether correspondence received at the Washington D.C. address would have been entered in the docket report supplied with the present petition. Petitioners must explain the discrepancy in the address in any renewed petition.

Failure to provide a proper correspondence address is not grounds for withdrawal of the holding of abandonment. As such, the showing is that there was no irregularity in the mailing of the Office action mailed on 7 August, 2003. Rather, petitioner failed to provide the Office with a proper correspondence

address. As such, the failure to receive the Office action is the fault of petitioner and not that of the Office. As such, the petition to withdraw the holding of abandonment is dismissed.

If petitioners have evidence that they attempted to provide the correct correspondence address to the Office prior to the mailing of the Office action mailed on 7 August, 2003, petitioners may wish to consider submitting said evidence with a renewed petition.

PETITION UNDER 37 CFR 1.137(a)

At the outset, the petition under 37 CFR 1.137(a) must be dismissed because petitioners have not provided the reply to the outstanding Office action mailed on 7 August, 2003, as required by 37 CFR 1.137(a)(1). The filing of the required reply is a prerequisite to a grantable petition. A copy of the Office action is enclosed for petitioners' reference in preparing a reply.

The Commissioner may revive an abandoned application if the delay in responding to the relevant outstanding Office requirement is shown to the satisfaction of the Commissioner to be "unavoidable".[3] Decisions on reviving abandoned applications on the basis of "unavoidable" delay have adopted the reasonably prudent person standard in determining if the delay was unavoidable:

> The word 'unavoidable' . . . is applicable to ordinary human affairs, and requires no more or greater care or diligence than is generally used and observed by prudent and careful men in relation to their most important business. It permits them in the exercise of this care to rely upon the ordinary and trustworthy agencies of mail and telegraph, worthy and reliable employees, and such other means and instrumentalities as are usually employed in such important business. If unexpectedly, or through the unforeseen fault or imperfection of these agencies and instrumentalities, there occurs a failure, it may properly be said to be unavoidable, all other conditions of promptness in its rectification being present.[4]

---

[3] 35 U.S.C. § 133.

[4] In re Mattullath, 38 App. D.C. 497, 514-15 (1912)(quoting Ex parte Pratt, 1887 Dec. Comm'r Pat. 31, 32-33 (1887)); see also Winkler v. Ladd, 221 F. Supp. 550, 552, 138 USPQ 666, 167-68 (D.D.C. 1963), aff'd, 143 USPQ 172 (D.C. Cir. 1963); Ex parte Henrich, 1913 Dec. Comm'r Pat. 139, 141 (1913). In addition, decisions on revival are

The showing of record is inadequate to establish unavoidable delay within the meaning of 35 U.S.C. § 133 and 37 CFR 1.137(a).[5] Specifically, an application is "unavoidably" abandoned only where petitioner, or counsel for petitioner, takes all action necessary for a proper response to the outstanding Office action, but through the intervention of unforeseen circumstances, such as failure of mail, telegraph, facsimile, or the negligence of otherwise reliable employees, the response is not timely received in the Office.[5]

There are three periods to be considered during the evaluation of a petition under 37 CFR 1.137(a):

(1) The delay in reply that originally resulted in expiration;
(2) The delay in filing an initial petition pursuant to § 1.137(a) to revive the application; and
(3) The delay in filing a *grantable* petition pursuant to § 1.137(a) to revive the application.[6]

This petition lacks the showing required by periods (1) and (2).

As stated in the analysis under 37 CFR 1.181, the showing of record suggests that the failure to receive the Office action mailed on 7 August, 2003, occurred because petitioner failed to provide a proper correspondence address prior to the mailing of that Office action. A delay caused by the failure on the part of petitioner, or petitioner's representative, to provide the U.S. Patent and Trademark Office with a current correspondence address does not constitute an unavoidable delay.[7]
Furthermore, petitioners were informed of the delay by the Notice of Abandonment mailed on 12 March, 2004, and assert that a letter was mailed to the Office on 23 March, 2004, in response to the Examiner's notifying petitioners that the application was abandoned. As such, by petitioners' own admission, they were

---

made on a "case-by-case basis, taking all the facts and circumstances into account." Smith v. Mossinghoff, 671 F.2d 533, 538, 213 USPQ 977, 982 (D.C. Cir. 1982). Finally, a petition cannot be granted where a petitioner has failed to meet his or her burden of establishing that the delay was "unavoidable." Haines v. Quigg, 673 F. Supp. 314, 316-17, 5 USPQ2d 1130, 1131-32 (N.D. Ind. 1987).

[5] Ex parte Pratt, 1887 Dec. Comm'r Pat. 31 (Comm'r Pat. 1887).

[6] See MPEP 711(c)(III)(C)(2) for a discussion of the requirements for a showing of unavoidable delay.

[7] See Ray v. Lehman, 55 F.3d 606, 34 USPQ2d 1786 (Fed. Cir. 1995).

aware of the abandonment of the application not later than 23 March, 2004. As a copy of the correspondence allegedly sent on 23 March, 2004, is neither in the official file nor provided by petitioners, the showing of record, however, is that petitioners allowed nearly three (3) years to elapse between learning the application was abandoned and taking action to continue prosecution. Petitioners have not shown whether any other steps were taken during the intervening time to inquire about the status of the application or whether any efforts were made to continue prosecution.

The showing of record, therefore, particularly with respect to the extended period between 23 March, 2004, and 5 February, 2007, the date of the filing of the present petition, suggests of a lack of diligence on the part of petitioners. It appears that petitioners were preoccupied with other matters during this period. Petitioner's preoccupation with other matters which took precedence over prosecution of the above-identified application does not constitute unavoidable delay.[8]

A delay resulting from a lack of knowledge or improper application of the patent statute, rules of practice, or the MPEP does not constitute an "unavoidable" delay.[9] As the showing of record does not rise to the level of unavoidable delay, the petition will be dismissed.

In summary, rather than unavoidable delay, the showing of record is that petitioners failed to take adequate precautions to ensure that a response to the Office action mailed on 7 August, 2003, was timely filed. As petitioners have not shown that they exercised the standard of care observed by a reasonable person in the conduct of his or her most important business, the petition will be dismissed.[10]

As the showing of record is insufficient to satisfy the requirements of a grantable petition under 37 CFR 1.137(a), the petition will be dismissed.

ALTERNATIVE VENUE

---

[8] See Smith v. Mossinghoff, 671 F.2d 533, 538, 213 USPQ 977, 982 (D.C. Cir. 1982).

[9] See Haines v. Quigg, 673 F. Supp. 314, 317, 5 USPQ 1130, 1132 (N.D. Ind. 1987), Vincent v. Mossinghoff, 230 USPQ 621, 624 (D.D.C. 1985); Smith v. Diamond, 209 USPQ 1091 (D.D.C. 1981); Potter v. Dann, 201 USPQ 574 (D.D.C. 1978); Ex parte Murray, 1891 Dec. Comm'r Pat. 130, 131 (1891).

[10] See note 7, supra.

Petitioner may wish to consider filing a renewed petition under 37 CFR 1.137(b), which now provides that where the delay in reply was unintentional, a petition may be filed to revive an abandoned application or a lapsed patent pursuant to 37 CFR 1.137(b). A grantable petition pursuant to 37 CFR 1.137(b) must be accompanied by:

(1) the required reply, unless previously filed. In a nonprovisional application abandoned for failure to prosecute, the required reply may be met by the filing of a continuing application. In a nonprovisional utility or plant application filed on or after 8 June, 1995, and abandoned for failure to prosecute, the required reply may also be met by the filing of a request for continued examination in compliance with § 1.114. In an application or patent, abandoned or lapsed for failure to pay the issue fee or any portion thereof, the required reply must be the payment of the issue fee or any outstanding balance thereof. In an application, abandoned for failure to pay the publication fee, the required reply must include payment of the publication fee.

(2) the petition fee as set forth in 37 CFR 1.17(m);

(3) a statement that the entire delay in filing the required reply from the due date for the reply until the filing of a grantable petition pursuant to 37 CFR 1.137(b) was unintentional. The Commissioner may required additional information where there is a question whether the delay was unintentional; and

(4) any terminal disclaimer (and fee as set forth in 37 CFR 1.20(d)) required pursuant to 37 CFR 1.137(c)).

The filing of a petition under the unintentional standard cannot be intentionally delayed and therefore should be filed promptly. A person seeking revival due to unintentional delay cannot make a statement that the delay was unintentional unless the entire delay, including the delay from the date it was discovered that the application was abandoned until the filing of the petition to revive under 37 CFR 1.137(b), was unintentional. A statement that the delay was unintentional is not appropriate if petitioner intentionally delayed the filing of a petition for revival under 37 CFR 1.137(b).

Should petitioners decide to file a petition under 37 CFR 1.137(b), the additional petition fee due would be $750.00 for a small entity.

A copy of the form for filing a petition under 37 CFR 1.137(b) to revive an application unintentionally abandoned is enclosed herewith for petitioners' convenience.

The address in the petition is different than the correspondence address. A copy of this decision is being mailed to the address in the petition. All future correspondence will be mailed solely to the address of record.

Further correspondence with respect to this matter should be addressed as follows:

By mail: Mail Stop Petition
Commissioner for Patents
P.O. Box 1450
Alexandria, VA 22313-1450

By FAX: (571) 273-8300
Attn: Office of Petitions

By hand: Customer Service Window
Mail Stop Petition
Randolph Building
401 Dulany Street
Alexandria, VA 22314

Telephone inquiries concerning this matter may be directed to the undersigned at (571) 272-3231.

DWood

Douglas I. Wood
Senior Petitions Attorney
Office of Petitions

Enclosure: Office Action mailed on 7 August, 2003
Form PTO/SB/64
Privacy Act Statement

Cc: MORRISON & FOERSTER LLP
1650 TYSONS BLVD., SUITE 300
MCLEAN VA 22102

PTO/SB/64 (04-07)
Approved for use through 09/30/2007. OMB 0651-0031
U.S. Patent and Trademark Office; U.S. DEPARTMENT OF COMMERCE
Under the Paperwork Reduction Act of 1995, no persons are required to respond to a collection of information unless it displays a valid OMB control number.

PETITION FOR REVIVAL OF AN APPLICATION FOR PATENT ABANDONED UNINTENTIONALLY UNDER 37 CFR 1.137(b)

Docket Number (Optional)

First named inventor:

Application No.: Art Unit:

Filed: Examiner:

Title:

Attention: Office of Petitions
Mail Stop Petition
Commissioner for Patents
P.O. Box 1450
Alexandria, VA 22313-1450
FAX (571) 273-8300

NOTE: If information or assistance is needed in completing this form, please contact Petitions Information at (571) 272-3282.

The above-identified application became abandoned for failure to file a timely and proper reply to a notice or action by the United States Patent and Trademark Office. The date of abandonment is the day after the expiration date of the period set for reply in the office notice or action plus an extensions of time actually obtained.

APPLICANT HEREBY PETITIONS FOR REVIVAL OF THIS APPLICATION

NOTE: A grantable petition requires the following items:
(1) Petition fee;
(2) Reply and/or issue fee;
(3) Terminal disclaimer with disclaimer fee - required for all utility and plant applications filed before June 8, 1995; and for all design applications; and
(4) Statement that the entire delay was unintentional.

1. Petition fee

☐ Small entity-fee $ _____ (37 CFR 1.17(m)). Applicant claims small entity status. See 37 CFR 1.27.

☐ Other than small entity – fee $ _____ (37 CFR 1.17(m))

2. Reply and/or fee

A. The reply and/or fee to the above-noted Office action in the form of _____(identify type of reply):

☐ has been filed previously on _____.
☐ is enclosed herewith.

B. The issue fee and publication fee (if applicable) of $ _____.

☐ has been paid previously on _____.
☐ is enclosed herewith.

This collection of information is required by 37 CFR 1.137(b). The information is required to obtain or retain a benefit by the public which is to file (and by the USPTO to process) an application. Confidentiality is governed by 35 U.S.C. 122 and 37 CFR 1.11 and 1.14. This collection is estimated to take 1.0 hour to complete, including gathering, preparing, and submitting the completed application form to the USPTO. Time will vary depending upon the individual case. Any comments on the amount of time you require to complete this form and/or suggestions for reducing this burden, should be sent to the Chief Information Officer, U.S. Patent and Trademark Office, U.S. Department of Commerce, P.O. Box 1450, Alexandria, VA 22313-1450. DO NOT SEND FEES OR COMPLETED FORMS TO THIS ADDRESS. **SEND TO: Mail Stop Petition, Commissioner for Patents, P.O. Box 1450, Alexandria, VA 22313-1450.**

If you need assistance in completing the form, call 1-800-PTO-9199 and select option 2.

Under the Paperwork Reduction Act of 1995, no persons are required to respond to a collection of information unless it displays a valid OMB control number.

3. Terminal disclaimer with disclaimer fee

☐ Since this utility/plant application was filed on or after June 8, 1995, no terminal disclaimer is required.

☐ A terminal disclaimer (and disclaimer fee (37 CFR 1.20(d)) of $ _____ for a small entity or $ _____ for other than a small entity) disclaiming the required period of time is enclosed herewith (see PTO/SB/63).

4. STATEMENT: The entire delay in filing the required reply from the due date for the required reply until the filing of a grantable petition under 37 CFR 1.137(b) was unintentional. [NOTE: The United States Patent and Trademark Office may require additional information if there is a question as to whether either the abandonment or the delay in filing a petition under 37 CFR 1.137(b) was unintentional (MPEP 711.03(c), subsections (III)(C) and (D)).]

WARNING:

Petitioner/applicant is cautioned to avoid submitting personal information in documents filed in a patent application that may contribute to identity theft. Personal information such as social security numbers, bank account numbers, or credit card numbers (other than a check or credit card authorization form PTO-2038 submitted for payment purposes) is never required by the USPTO to support a petition or an application. If this type of personal information is included in documents submitted to the USPTO, petitioners/applicants should consider redacting such personal information from the documents before submitting them to the USPTO. Petitioner/applicant is advised that the record of a patent application is available to the public after publication of the application (unless a non-publication request in compliance with 37 CFR 1.213(a) is made in the application) or issuance of a patent. Furthermore, the record from an abandoned application may also be available to the public if the application is referenced in a published application or an issued patent (see 37 CFR 1.14). Checks and credit card authorization forms PTO-2038 submitted for payment purposes are not retained in the application file and therefore are not publicly available.

Signature	Date
Typed or printed name	Registration Number, if applicable
Address	Telephone Number
Address	

Enclosures: ☐ Fee Payment

☐ Reply

☐ Terminal Disclaimer Form

☐ Additional sheets containing statements establishing unintentional delay

☐ Other: _____

CERTIFICATE OF MAILING OR TRANSMISSION [37 CFR 1.8(a)]

I hereby certify that this correspondence is being:

☐ Deposited with the United States Postal Service on the date shown below with sufficient postage as first class mail in an envelope addressed to: Mail Stop Petition, Commissioner for Patents, P. O. Box 1450, Alexandria, VA 22313-1450.

☐ Transmitted by facsimile on the date shown below to the United States Patent and Trademark Office at (571) 273-8300.

Date	Signature
	Typed or printed name of person signing certificate

Privacy Act Statement

The **Privacy Act of 1974 (P.L. 93-579)** requires that you be given certain information in connection with your submission of the attached form related to a patent application or patent. Accordingly, pursuant to the requirements of the Act, please be advised that: (1) the general authority for the collection of this information is 35 U.S.C. 2(b)(2); (2) furnishing of the information solicited is voluntary; and (3) the principal purpose for which the information is used by the U.S. Patent and Trademark Office is to process and/or examine your submission related to a patent application or patent. If you do not furnish the requested information, the U.S. Patent and Trademark Office may not be able to process and/or examine your submission, which may result in termination of proceedings or abandonment of the application or expiration of the patent.

The information provided by you in this form will be subject to the following routine uses:

1. The information on this form will be treated confidentially to the extent allowed under the Freedom of Information Act (5 U.S.C. 552) and the Privacy Act (5 U.S.C 552a). Records from this system of records may be disclosed to the Department of Justice to determine whether disclosure of these records is required by the Freedom of Information Act.
2. A record from this system of records may be disclosed, as a routine use, in the course of presenting evidence to a court, magistrate, or administrative tribunal, including disclosures to opposing counsel in the course of settlement negotiations.
3. A record in this system of records may be disclosed, as a routine use, to a Member of Congress submitting a request involving an individual, to whom the record pertains, when the individual has requested assistance from the Member with respect to the subject matter of the record.
4. A record in this system of records may be disclosed, as a routine use, to a contractor of the Agency having need for the information in order to perform a contract. Recipients of information shall be required to comply with the requirements of the Privacy Act of 1974, as amended, pursuant to 5 U.S.C. 552a(m).
5. A record related to an International Application filed under the Patent Cooperation Treaty in this system of records may be disclosed, as a routine use, to the International Bureau of the World Intellectual Property Organization, pursuant to the Patent Cooperation Treaty.
6. A record in this system of records may be disclosed, as a routine use, to another federal agency for purposes of National Security review (35 U.S.C. 181) and for review pursuant to the Atomic Energy Act (42 U.S.C. 218(c)).
7. A record from this system of records may be disclosed, as a routine use, to the Administrator, General Services, or his/her designee, during an inspection of records conducted by GSA as part of that agency's responsibility to recommend improvements in records management practices and programs, under authority of 44 U.S.C. 2904 and 2906. Such disclosure shall be made in accordance with the GSA regulations governing inspection of records for this purpose, and any other relevant (*i.e.*, GSA or Commerce) directive. Such disclosure shall not be used to make determinations about individuals.
8. A record from this system of records may be disclosed, as a routine use, to the public after either publication of the application pursuant to 35 U.S.C. 122(b) or issuance of a patent pursuant to 35 U.S.C. 151. Further, a record may be disclosed, subject to the limitations of 37 CFR 1.14, as a routine use, to the public if the record was filed in an application which became abandoned or in which the proceedings were terminated and which application is referenced by either a published application, an application open to public inspection or an issued patent.
9. A record from this system of records may be disclosed, as a routine use, to a Federal, State, or local law enforcement agency, if the USPTO becomes aware of a violation or potential violation of law or regulation.

UNITED STATES PATENT AND TRADEMARK OFFICE

UNITED STATES DEPARTMENT OF COMMERCE
United States Patent and Trademark Office
Address: COMMISSIONER FOR PATENTS
P.O. Box 1450
Alexandria, Virginia 22313-1450
www.uspto.gov

APPLICATION NO.	FILING DATE	FIRST NAMED INVENTOR	ATTORNEY DOCKET NO.	CONFIRMATION NO.
10/152,977	05/23/2002	Tae Song Kim	300602002800	5521

7590 08/07/2003

Raj S. Dave
Morrison & Foerster LLP
Suite 5500
2000 Pennsylvania Avenue N.W.
Washington, DC 20006-1888

EXAMINER
SPERTY, ARDEN B

ART UNIT	PAPER NUMBER
1775	9

DATE MAILED: 08/07/2003

Please find below and/or attached an Office communication concerning this application or proceeding.

AS 9

Office Action Summary	Application No.	Applicant(s)	
	10/152,977	KIM ET AL.	
	Examiner	Art Unit	
	Arden B. Sperty	1775	

-- The MAILING DATE of this communication appears on the cover sheet with the correspondence address --

P ri d f r Reply

A SHORTENED STATUTORY PERIOD FOR REPLY IS SET TO EXPIRE 3 MONTH(S) FROM THE MAILING DATE OF THIS COMMUNICATION.

- Extensions of time may be available under the provisions of 37 CFR 1.136(a). In no event, however, may a reply be timely filed after SIX (6) MONTHS from the mailing date of this communication.
- If the period for reply specified above is less than thirty (30) days, a reply within the statutory minimum of thirty (30) days will be considered timely.
- If NO period for reply is specified above, the maximum statutory period will apply and will expire SIX (6) MONTHS from the mailing date of this communication.
- Failure to reply within the set or extended period for reply will, by statute, cause the application to become ABANDONED (35 U.S.C. § 133).
- Any reply received by the Office later than three months after the mailing date of this communication, even if timely filed, may reduce any earned patent term adjustment. See 37 CFR 1.704(b).

Status

1)☒ Responsive to communication(s) filed on *13 June 2003*.

2a)☐ This action is **FINAL**. 2b)☒ This action is non-final.

3)☐ Since this application is in condition for allowance except for formal matters, prosecution as to the merits is closed in accordance with the practice under *Ex parte Quayle*, 1935 C.D. 11, 453 O.G. 213.

Disposition of Claims

4)☒ Claim(s) *1-19* is/are pending in the application.

4a) Of the above claim(s) *2-11* is/are withdrawn from consideration.

5)☐ Claim(s) _____ is/are allowed.

6)☒ Claim(s) *1 and 12-19* is/are rejected.

7)☐ Claim(s) _____ is/are objected to.

8)☐ Claim(s) _____ are subject to restriction and/or election requirement.

Application Papers

9)☐ The specification is objected to by the Examiner.

10)☐ The drawing(s) filed on _____ is/are: a)☐ accepted or b)☐ objected to by the Examiner.

Applicant may not request that any objection to the drawing(s) be held in abeyance. See 37 CFR 1.85(a).

11)☐ The proposed drawing correction filed on _____ is: a)☐ approved b)☐ disapproved by the Examiner.

If approved, corrected drawings are required in reply to this Office action.

12)☐ The oath or declaration is objected to by the Examiner.

Pri rity under 35 U.S.C. §§ 119 and 120

13)☒ Acknowledgment is made of a claim for foreign priority under 35 U.S.C. § 119(a)-(d) or (f).

a)☒ All b)☐ Some * c)☐ None of:

1.☒ Certified copies of the priority documents have been received.

2.☐ Certified copies of the priority documents have been received in Application No. _____.

3.☐ Copies of the certified copies of the priority documents have been received in this National Stage application from the International Bureau (PCT Rule 17.2(a)).

* See the attached detailed Office action for a list of the certified copies not received.

14)☐ Acknowledgment is made of a claim for domestic priority under 35 U.S.C. § 119(e) (to a provisional application).

a) ☐ The translation of the foreign language provisional application has been received.

15)☐ Acknowledgment is made of a claim for domestic priority under 35 U.S.C. §§ 120 and/or 121.

Attachment(s)

1) ☐ Notice of References Cited (PTO-892)
2) ☐ Notice of Draftsperson's Patent Drawing Review (PTO-948)
3) ☐ Information Disclosure Statement(s) (PTO-1449) Paper No(s) _____.
4) ☐ Interview Summary (PTO-413) Paper No(s). _____.
5) ☐ Notice of Informal Patent Application (PTO-152)
6) ☐ Other:

SECOND NON-FINAL OFFICE ACTION

Claim Rejections - 35 USC § 112

1. Claims 1 and 12-19 are rejected under 35 U.S.C. 112, second paragraph, as being indefinite for failing to particularly point out and distinctly claim the subject matter which applicant regards as the invention.

Regarding claim 1, it is unclear what units are associated with the claimed x value of 0.01-0.20. It is essential that Applicant specify whether weight %, mol % or some other measure or ratio is intended for the composition to be understood.

It is unclear how the stoichiometry of claim 12 meets the requirements of claim 1 where x=0.01-0.20. Furthermore, should Cd and W have subscripts of ½?

Regarding claims 1 and 12, is the $Pb(Zr,Ti)O_3$ notation always equivalent to "-$PbTiO_3$-$PbZrO_3$" as written in claim 12? In other words, does the "-$PbTiO_3$-$PbZrO_3$" notation of claim 12 further limit the notation of claim 1 or is it merely an equivalent restatement of the notation found in claim 1?

Claim Rejections - 35 USC § 103

2. The following is a quotation of 35 U.S.C. 103(a) which forms the basis for all obviousness rejections set forth in this Office action:

> (a) A patent may not be obtained though the invention is not identically disclosed or described as set forth in section 102 of this title, if the differences between the subject matter sought to be patented and the prior art are such that the subject matter as a whole would have been obvious at the time the invention was made to a person having ordinary skill in the art to which said subject matter pertains. Patentability shall not be negatived by the manner in which the invention was made.

3. Claims 1 and 12-19 are rejected under 35 U.S.C. 103(a) as being unpatentable over USPN 4,917,810 to Tsunooka.

Regarding claims 1 and 12, the reference teaches a three-component ceramic comprising a lead titanate zirconate family of compositions (col 7, lines 1-4) modified by any of (a) to (f) found in col 7, lines 5-37. Oxides selected from (b) (lines 16-20) include the composition wherein A^{2+} is Pb, B^{2+} is Cd, and B^{6+} is W. Therefore, it would have been obvious to one of ordinary skill in the art to modify the lead zirconate titanate with $Pb(Cd_{1/2}W_{1/2})$ and the reference is therefore seen to anticipate the composition as written in claim 12. Although the reference does not define the composition using the notation of Applicant's claim 1, the reference does disclose the composition of Applicant's dependent claim 12, therefore the limitations of independent claim 1 are also met (col 7, lines 1-20).

Regarding claim 13, the reference discloses the piezoelectric film of about 15 microns, which is within Applicant's claimed range (col 5, lines 57-58).

The process limitations of claims 15 and 18-19 do not distinguish the claimed film from that of the prior art in the absence of structural differences resulting from the process.

Regarding claim 16, the reference does not teach that the film reacts with Si, therefore the limitations of the claim are met.

Response to Arguments

4. Applicant's arguments filed June 12, 2003 and June 13, 2003 have been fully considered but they are not persuasive.

Applicant's argument in Paper No. 7 dated June 12, 2003, stating that the Tsunooka reference does not teach x=0.01-0.20 has been addressed by the 35 USC 112 rejection made herein.

Applicant's argument in Paper No. 7 dated June 12, 2003, stating that there is no enabling disclosure for making a film is not found to be convincing. The reference clearly states in column 5 lines 45-58 that the piezoelectric material is used to form a film.

Applicant's argument in Paper No. 8 dated June 13, 2003, stating that the reference does not disclose a low sintering temperature is not persuasive because such a process limitation does not distinguish the film from that of the prior art in the absence of structural differences resulting from the process.

Applicant's argument in Paper No. 8 dated June 13, 2003, stating that the claimed invention is not obtained by compounding a piezoelectric material with a polymer is not commensurate in scope with the claims. The open language of claim 1 allows for the inclusion of a polymer. Further, it is insufficient for Applicant to "consider" that a property is not necessarily present in the prior art. Absent a valid explanation of what gives the claimed invention the property in question and a showing that the prior art does not possess the property, it is a reasonable conclusion that identical compositions share the same properties.

Conclusion

Any inquiry concerning this communication or earlier communications from the examiner should be directed to Arden B. Sperty whose telephone number is 703-305-3143. The examiner can normally be reached on M-R, 08:00-16:00.

If attempts to reach the examiner by telephone are unsuccessful, the examiner's supervisor, Deborah Jones can be reached on 703-308-3822. The fax phone numbers for the organization where this application or proceeding is assigned are 703-872-9310 for regular communications and 703-872-9311 for After Final communications.

Any inquiry of a general nature or relating to the status of this application or proceeding should be directed to the receptionist whose telephone number is 703-308-0661.

abs
August 6, 2003

8/6/03

UNITED STATES PATENT AND TRADEMARK OFFICE

Commissioner for Patents
United States Patent and Trademark Office
P.O. Box 1450
Alexandria, VA 22313-1450
www.uspto.gov

HITACHI GLOBAL STORAGE
TECHNOLOGIES, INC.
5600 COTTLE ROAD, NHGB-0142
SAN JOSE CA 95193

COPY MAILED

JAN 18 2005

OFFICE OF PETITIONS

In re Application of :
Krause et al. :
Application No. 10/153,005 : DECISION ON PETITION
Filed: May 21, 2002 :
Attorney Docket No. SJ0920010121US1 :

This is a decision on the petition under 37 CFR 1.137(b), filed December 20, 2004, to revive the above-identified application.

The petition is **GRANTED**.

This application became abandoned for failure to reply timely to the Office action mailed May 21, 2004, which set a one-month shortened statutory period to respond. No extensions of time were obtained pursuant to 37 CFR 1.136(a). Accordingly, this application became abandoned on June 22, 2004.

The petitioner has met the requirements to revive the above-identified application pursuant to 37 CFR 1.137(b). Petitioner submitted the required reply in the form of an election, paid the petition fee, and made the proper statement of unintentional delay.

This matter is being referred to Technology Center Art Unit 2652.

Telephone inquiries concerning this matter may be directed to the undersigned at (571) 272-3211.

Christina Tartera Donnell

Christina Tartera Donnell
Senior Petitions Attorney
Office of Petitions

UNITED STATES PATENT AND TRADEMARK OFFICE

COMMISSIONER FOR PATENTS
UNITED STATES PATENT AND TRADEMARK OFFICE
P.O. BOX 1450
ALEXANDRIA, VA 22313-1450
www.uspto.gov

GREENBERG TRAURIG, LLP (SV)
IP DOCKETING
2450 COLORADO AVENUE
SUITE 400E
SANTA MONICA CA 90404

COPY MAILED
DEC 15 2006
OFFICE OF PETITIONS

In re Application of :
Feng : DECISION ON PETITION
Application No. 10/153,021 :
Filed: May 20, 2002 :
Atty. Dkt. No.: 79981-201101/US :

The above-identified application has been forwarded to the Office of Petitions for consideration of the petition to withdraw the holding of abandonment under 37 CFR 1.181 filed November 24, 2006.

The petition under 37 CFR 1.181 to withdraw the holding of abandonment is hereby **DISMISSED**.

Any request for reconsideration of this decision must be submitted within **TWO (2) MONTHS** from mail date of this decision. Extensions of time under 37 CFR 1.136(a) are permitted. The reconsideration request should include a cover letter entitled "Renewed Petition under 37 CFR 1.181." This is not a final agency decision.

This application became abandoned for failure to timely submit a proper reply to the Notice mailed September 9, 2005. The Notice set a one month non-extendible period of time for reply. Notice of Abandonment was mailed January 25, 2006.

Petitioner alleges non-receipt of the Notice mailed September 9, 2005.

In the absence of any irregularity in the mailing of the Notice, there is a strong presumption that the Notice was properly mailed to practitioner at the address of record. This presumption may be overcome by a showing that the Notice was not in fact received. The showing required to establish non-receipt of an Office communication must include a statement from the practitioner stating that the Office communication was not received by the practitioner and attesting to the fact that a search of the file jacket and docket records indicates that the

Office communication was not received. A copy of the docket record where the non-received Office communication would have been entered had it been received and docketed must be attached to and referenced in practitioner's statement. *See*, MPEP 711.03(c). The showing outlined above may not be sufficient if there are circumstances that point to a conclusion that the Office communication may have been lost after receipt rather than a conclusion that the Office communication was lost in the mail.

Office records indicate the Office communication was properly mailed to the correspondence address of record at the time of mailing. Accordingly, there was no irregularity in mailing the Office communication on the part of the United States Patent and Trademark Office.

The instant petition fails to establish petitioners' contention of non-receipt of the Notice. The document included with the petition has been given little weight as the document is in a language other than English and lacks an English language translation. Any renewed petition must include supporting documentation to establish non-receipt of the Notice.

Further correspondence with respect to this matter should be addressed as follows:

By mail: **Mail Stop Petition**
Commissioner for Patents
P.O. Box 1450
Alexandria, VA 22313-1450

By facsimile: (571) 273-8300

By hand delivery: U.S. Patent and Trademark Office
Customer Window, **Mail Stop Petition**
Randolph Building
401 Dulany Street
Alexandria, VA 22314

Telephone inquiries concerning this matter may be directed to the undersigned at (571) 272-3205.

Alesia M. Brown
Petitions Attorney
Office of Petitions

UNITED STATES PATENT AND TRADEMARK OFFICE

COMMISSIONER FOR PATENTS
UNITED STATES PATENT AND TRADEMARK OFFICE
P.O. BOX 1450
ALEXANDRIA, VA 22313-1450
www.uspto.gov

GREENBERG TRAURIG, LLP (SV)
IP DOCKETING
2450 COLORADO AVENUE
SUITE 400E
SANTA MONICA CA 90404

COPY MAILED

MAR 19 2007

OFFICE OF PETITIONS

In re Application of :
Feng : DECISION ON PETITION
Application No. 10/153,021 :
Filed: May 20, 2002 :
Atty. Dkt. No.: 79981-201101/US :

This decision is in response to the petition renewed under 37 CFR 1.137(b), filed February 16, 2007.

The petition under 37 CFR 1.137(b) is hereby **GRANTED**.

This application became abandoned for failure to timely submit a proper reply to the Notice mailed September 9, 2005. The Notice set a one month non-extendible period of time for reply. Notice of Abandonment was mailed January 25, 2006. A petition under 37 CFR 1.181 was filed November 24, 2006 and dismissed December 15, 2006.

A grantable petition pursuant to 37 C.F.R. § 1.137(b) must be accompanied by: (1) the required reply to the outstanding Office action or notice, unless previously filed; (2) the petition fee as set forth in 37 C.F.R. § 1.17(m); (3) a statement that the entire delay in filing the required reply from the due date for the reply until the filing of a grantable petition pursuant to 37 C.F.R. § 1.137(b) was unintentional; and (4) any terminal disclaimer (and fee set forth in 37 C.F.R. § 1.20(d)) required pursuant to 37 C.F.R. § 1.137(c).

The instant petition has been reviewed and found in compliance with the provisions of 37 C.F.R. § 1.137(b). Accordingly, the failure to timely submit a proper reply to the Notice is accepted as having been unintentionally delayed.

This application will be forwarded to the Office of Patent Publication for further processing.

Telephone inquiries concerning this matter may be directed to the undersigned at (571) 272-3205.

Alesia M. Brown
Petitions Attorney
Office of Petitions

UNITED STATES PATENT AND TRADEMARK OFFICE

COMMISSIONER FOR PATENTS
UNITED STATES PATENT AND TRADEMARK OFFICE
P.O. BOX 1450
ALEXANDRIA, VA 22313-1450
www.uspto.gov

Paper No. 3

MAILED

OCT 31 2003

Technology Center 2100

William O. Isaacs, II, Esq.
KING & SPALDING
191 Peachtree Street, N.E.
Atlanta, GA 30303

In re Application of
Jeffrey Scott YOUNG
Application No. 10/153,036
Filed: May 22, 2002
For: SYSTEM AND METHOD FOR METADATA-DRIVEN USER INTERFACE

DECISION ON REQUEST FOR WITHDRAWAL AS ATTORNEY

This is a decision on the Request To Withdraw from Representation filed September 4, 2002.

A grantable request to withdraw as attorney of record should indicate thereon the present mailing addresses of the attorney(s) who is/are withdrawing from the record and of the applicant. The request for withdrawal must be signed by every attorney seeking to withdraw or contain a clear indication that one attorney is signing on behalf of another/others. A request to withdraw will not be approved unless at least 30 (thirty) days would remain between the date of approval and the later of the expiration date of a time to file a response or the expiration date of the maximum time period which can be extended under 37 C.F.R. § 1. 136(a). The effective date of withdrawal being the date of decision and not the date of request. See M.P.E.P. § 402.06. 37 C.F.R. § 1.36 further requires that the applicant or patent owner be notified of the withdrawal of the attorney or agent.

The request is **GRANTED**.

All future communication from the Office will continue to be directed to the above-listed address until otherwise notified by applicant. This correspondence address is provided by the withdrawn attorney(s). Applicant is reminded of the obligation to promptly notify the U.S. Patent and Trademark Office (the Office) of any change in correspondence address to ensure receipt of all communications from the Office.

Vincent N. Trans
Special Programs Examiner
Technology Center 2100
Computer Architecture, Software and Information Security
(703) 305-9750

UNITED STATES PATENT AND TRADEMARK OFFICE

Commissioner for Patents
United States Patent and Trademark Office
P.O. Box 1450
Alexandria, VA 22313-1450
www.uspto.gov

COPY MAILED
SEP 0 8 2006
OFFICE OF PETITIONS

ALBERT KEYACK
1005 GLENDEVON DR.
AMBLER PA 19002

In re Application of :
Keren et al. :
Application No. 10/153,050 : ON PETITION
Filed: May 21, 2002 :
Attorney Docket Number: 1285-CIP-DIV-01:

This is a decision on the petition under 37 CFR 1.137(b), filed June 30, 2006, to revive the above-identified application.

The petition is **dismissed.**

Any request for reconsideration must be submitted within TWO (2) MONTHS from the mail date of this decision. Extensions of time under 37 CFR 1.136(a) are permitted. The reconsideration request should include a cover letter entitled "Renewed Petition under 37 CFR 1.137(b)." This is **not** final agency action within the meaning of 5 U.S.C.§704

This above-identified application became abandoned for failure to timely file a reply to the non-final Office Action of July 6, 2004. The non-final Office Action set a three (3) month shortened statutory period for reply. No extensions of time were obtained under the provisions of 37 CFR 1.136(a). Accordingly, this application became abandoned on October 7, 2004. A Notice of Abandonment was mailed on January 28, 2005.

The petition has **not** been reviewed on the merits because the petition provided has not been signed.

Pursuant to 37 CFR 1.33, amendments and other papers, except for written assertions pursuant to § 1.27(c)(2)(ii) of this part, filed in the application must be signed by:

(1) A registered attorney or agent of record appointed in compliance with § 1.34(b);
(2) A registered attorney or agent not of record who acts in a representative capacity under the provisions of § 1.34(a);
(3) An assignee as provided for under § 3.71(b) of this chapter; or
(4) All of the applicants (§ 1.41(b)) for patent, unless there is an assignee of

the entire interest and such assignee has taken action in the application in accordance with § 3.71 of this chapter.

Further Correspondence with respect to this matter should be addressed as follows:

By mail:	Mail Stop Petition Commissioner for Patents P.O. Box 1450 Alexandria, VA 22313-1450
By facsimile:	(571) 273-8300
By delivery service: (FedEx, UPS, DHL, etc.)	U.S. Patent and Trademark Office Customer Service Window, Mail Stop Petition Randolph Building 401 Dulany Street Alexandria, VA 22314

Telephone inquiries concerning this matter should be directed to the undersigned at (571) 272-3215.

Charlema R. Grant

Charlema R. Grant
Petitions Attorney
Office of Petitions

cc: Albert Keyack
260 South Broad Street
Philadelphia, PA 19102

UNITED STATES PATENT AND TRADEMARK OFFICE

Commissioner for Patents
United States Patent and Trademark Office
P.O. Box 1450
Alexandria, VA 22313-1450
www.uspto.gov

ALBERT KEYACK
1005 GLENDEVON DR.
AMBLER PA 19002

COPY MAILED

JAN 08 2007

OFFICE OF PETITIONS

In re Application of :
Keren et al. :
Application No. 10/153,050 : ON PETITION
Filed: May 21, 2002 :
Attorney Docket Number: 1285-CIP-DIV-01

This is a decision on the renewed petition under 37 CFR 1.137(b), filed September 12, 2006, to revive the above-identified application.

This above-identified application became abandoned for failure to timely file a reply to the non-final Office Action of July 6, 2004. The non-final Office Action set a three (3) month shortened statutory period for reply. No extensions of time were obtained under the provisions of 37 CFR §1.136(a). Accordingly, this application became abandoned on October 7, 2004. A Notice of Abandonment was mailed on January 28, 2005. A petition under 37 CFR 1.137(b) was dismissed on September 8, 2006.

This petition is hereby **Granted**.

The office hereby acknowledges the receipt of the amendment submitted with the instant petition.

A request for change of correspondence address received on June 30, 2006 will not be entered because it does not appear that attorney Kayack has been authorized to prosecute the above-identified application. Under 37 CFR 1.33(a)(2), where an executed oath or declaration under 37 CFR 1.63 has been filed by any of the inventors, the correspondence address may be changed by (A) a patent practitioner of record, (B) an assignee as provided for under 37 CFR 3.71(b), or (C) all of the applicants (37 CFR 1.41(b)) for patent, unless there is an assignee of the entire interest and such assignee has taken action in the application in accordance with 37 CFR 3.71. See 37 CFR 1.33(a)(2). Accordingly, the change of correspondence address cannot be entered. To the extent a power of attorney authorizing attorney Kayack has been previously

submitted a copy should be provided.

This application is being forwarded to Technology Center 3700 for further processing.

Telephone inquiries concerning this matter should be directed to the undersigned at (571) 272-3215.

Charlema R. Grant

Charlema R. Grant
Petitions Attorney
Office of Petitions

cc: Albert Kayack
260 South Broad Street
Philadelphia, PA 19102

UNITED STATES PATENT AND TRADEMARK OFFICE

UNITED STATES DEPARTMENT OF COMMERCE
United States Patent and Trademark Office
Address: COMMISSIONER FOR PATENTS
P.O. Box 1450
Alexandria, Virginia 22313-1450
www.uspto.gov

CENTRAL COAST PATENT AGENCY, INC
3 HANGAR WAY SUITE D
WATSONVILLE, CA 95076

Mail Date: 04/20/2010

Applicant	: Yuri Shtivelman	: DECISION ON REQUEST FOR
Patent Number	: 7602766	: RECALCULATION of PATENT
Issue Date	: 10/13/2009	: TERM ADJUSTMENT IN VIEW
Appliction No	: 10/153,068	: OF WYETH AND NOTICE OF INTENT TO
Filed	: 05/20/2002	: ISSUE CERTIFICATE OF CORRECTION
		:

The Request for Recalculation is **GRANTED** to the extent indicated.

The patent term adjustment has been determined to be **48** days. The USPTO will *sua sponte* issue a certificate of correction reflecting the amount of PTA days determined by the recalculation.

Prior to the issuance of the certificate of correction, the USPTO will afford patentee an opportunity to be heard and request reconsideration. Accordingly, patentee has **one month or thirty (30) days**, whichever is longer, to file a request for reconsideration of this patent term adjustment calculation. See 35 U.S.C. 154(b)(3)(B)(ii) and 37 CFR 1.322(a)(4). No extensions of time will be granted under 37 CFR 1.136.

Patentee should use document code PET.OP if electronically filing a request for reconsideration of this patent term adjustment calculation. The patentee must also include the information required by 37 CFR 1.705(b)(2) and the fee required by 37 CFR 1.18(e). If patentee does not file a timely request for reconsideration of this patent term adjustment calculation including the information required by 37 CFR 1.705(b)(2) and the fee required by 37 CFR 1.18(e), the USPTO will issue a certificate of correction reflecting the PTA determination noted above.

Patentee should be aware that in order to preserve the right to review in the United States District Court for the District of Columbia of the USPTO patent term adjustment determination, patentee must ensure that he or she also take the steps required under 35 U.S.C. 154(b)(4)(A) in a timely manner. Nothing in the request for recalculation should be construed as providing an alternative time frame for commencing a civil action under 35 U.S.C. 154(b)(4)(A).

Any questions concerning this decision should be directed to the Office of Patent Legal Administration at 571-272-7702.

UNITED STATES PATENT AND TRADEMARK OFFICE

OFFICE

COPY MAILED

AUG 0 2 2006

Director's Office
Office of Patent Publication

MEDTRONIC MINIMED INC.
18000 DEVONSHIRE STREET
NORTHRIDGE, CA 91325-1219

In re Application of	:	
MASTROTOTARO, JOHN J., et al.	:	
Application No. 10/153,098	:	**DECISION ON PETITION**
Filed: May 22, 2002	:	
Attorney Docket No. G&C 130.45-US-D1	:	

This is a decision on the Petition To Withdraw Holding Of Abandonment Based On Failure To Receive Issue Fee Under 37 CFR § 1.181 and MPEP 1002.02(b), received in the United States Patent & Trademark Office (USPTO) on January 24, 2006.

The petition is **DISMISSED**. Any request for reconsideration of this decision, or as explained below, filing a petition seeking revival under 37 CFR § 1.137, must be filed within TWO (2) MONTHS from the mail date of this decision.

The above-identified application was held abandoned for applicant's failure to timely pay the issue fee, as required in the Notice of Allowance and Fee(s) Due August 26, 2005. The Notice of Abandonment, mailed on October 25, 2005 indicates, "The submitted fee of $300 is insufficient. A balance of $1,400 is due."

Petitioner asserts that at all times on November 16, 2005 Deposit Account No. 50-0494 had sufficient funds to cover the $1,400 issue fee. In support of this assertion, petitioner has submitted a copy of the USPTO Deposit Account Statement for the month of November 2005. Also stated that the exact date the USPTO attempted to charge the fee is unclear, since the date on the Fee Worksheet—Notice Of Fee Due—appears to be overwritten to change the date to November 16, 2005.

Part B – Fee(s) Transmittal received in the USPTO on June 28, 2005, authorized the Issue Fee, Publication Fee, and eleven (11) Advance Order copies be charged to Deposit Account No. 50-0494. Unfortunately, on **November 16, 2005**, when an attempt was made by the Office of Finance to charge the fees, there were insufficient funds in the Deposit Account to charge all required fees. The date annotated on the Notice Of Fee Due is the correct date the Office attempted to charge the fees. Also, the Deposit Account Maintenance record indicates that at the time the Office attempted to charge the fees, there was a Deposit Account balance amount of $563.

37 CFR 1.25 (a) and (b), which states in part:

> 1.25(a) ...An amount sufficient to cover all fee, services, copies, etc., requested must always be on deposit. Charges to accounts with insufficient funds will not be accepted."
>
> 1.25 (b) ...An authorization to charge a fee to a deposit account will not be considered payment of the fee on the date the authorization to charge the fee is effective as to the particular fee to be charged unless sufficient funds are present in the account to cover the fee.

In light of the non-compliance with 37 CFR 1.25, the holding of abandonment cannot be withdrawn.

Applicant may seek relief by filing a petition for Revival of Abandoned Application under CFR § 1.137 (a) or (b). (Forms are available at USPTO website http://www.uspto.gov)

- Under 37 CFR 1.137(a), a petition for the revival of an ***unavoidable*** abandoned application
- Under 37 CFR 1.137(b), a petition for the revival of an ***unintentionally*** abandoned application

Further inquires with respect to filing a petition under 37 CFR § 1.137 may be directed to the Office of Petitions at 571-272-3282 or addressed as follows:

By mail: Mail Stop Petitions
Commissioner for Patents
Office of Petitions
P O Box 1450
Alexandria, VA 22313-1450

Telephone inquires concerning this decision matter may be directed to the undersigned at 703 308-9250 Ext. 137.

Thomas E. Hawkins

Thomas E. Hawkins
Paralegal Specialist
Office of the Director
Office of Patent Publications

UNITED STATES PATENT AND TRADEMARK OFFICE

Commissioner for Patents
United States Patent and Trademark Office
P.O. Box 1450
Alexandria, VA 22313-1450
www.uspto.gov

MEDTRONIC MINIMED INC.
18000 DEVONSHIRE STREET
NORTHRIDGE, CA 91325-1219

COPY MAILED
NOV 0 8 2006
OFFICE OF PETITIONS

In re Application of	:	
Mastrototaro et al.	:	
Application No. 10/153,098	:	ON PETITION
Filing or 371(c) Date 05/22/2002	:	
Title of Invention:	:	
TEST PLUG AND CABLE FOR A	:	
GLUCOSE MONITOR	:	

This is a decision on the Petition for Revival of an Application for Patent Abandoned Unintentionally Under 37 C.F.R. § 1.137(b), filed August 8, 2006.

This Petition is hereby **granted**.

The above-identified application became abandoned for failure to timely and properly reply to the Notice of Allowance and Issue Fee Due, mailed August 26, 2005. The Notice set a non-extendable three (3) month period for reply. No reply having been received, the application became abandoned on November 27, 2005. A Notice of Abandonment was mailed January 9, 2006.

A petition to Withdraw the Holding of Abandonment, filed January 24, 2006, was dismissed in a Decision mailed August 2, 2006, for failing to meet the requirements for a grantable petition under 37 CFR 1.181.

Applicant has submitted the issue fee with the instant petition. The publication fee was previously submitted on November 15, 2005. Accordingly, the petition is granted.

The application file does not indicate a change of address has been filed in this case, although the address given on the petition differs from the address of record. A change of address should be filed in this case in accordance with MPEP 601.03. A courtesy copy of this decision is being mailed to the address noted on the petition. However, until otherwise instructed, all future correspondence regarding this application will be mailed solely to the address of record.

This application is being referred to Publishing Division for processing into a patent.

Telephone inquiries concerning this decision should be directed to the undersigned at (571) 272-3232.

Derek L. Woods
Attorney
Office of Petitions

CC: WILLIAM J. WOOD
6701 CENTER DRIVE WEST
SUITE #1050
LOS ANGELES, CA 90045

UNITED STATES PATENT AND TRADEMARK OFFICE

Commissioner for Patents
United States Patent and Trademark Office
P.O. Box 1450
Alexandria, VA 22313-1450
www.uspto.gov

Paper No.

Katten Muchin Zavis Rosenman
Attention: Patent
Administrator
Suite 1600
525 West Monroe Street
Chicago IL 60661-3693

MAILED

JUN 18 2009

OFFICE OF PETITIONS

In re Application of	:	
McNeal et al.	:	DECISION ON PETITION
Application No. 10/153,116	:	
Filed: May 22, 2002	:	
Atty Docket No. 281450/197	:	

This is in response to the PETITION FOR REVIVAL OF AN APPLICATION FOR PATENT ABANDONED UNINTENTIONALLY UNDER 37 CFR 1.137(b) filed January 8, 2009.

The petition is **GRANTED**.

The above-identified application became abandoned for failure to timely file a response to the non-final Office action mailed June 4, 2008. The Office action set a three-month shortened statutory period for reply, with extensions of time obtainable under 37 CFR 1.136(a). No reply received and no extension of time obtained, the application became abandoned effective September 5, 2008. A courtesy Notice of Abandonment was mailed on January 9, 2009.

In response, applicants filed the instant petition. The petition includes the required reply in the form of a Notice of Appeal (and notice of appeal fee). The petition also includes the petition fee and a statement of unintentional delay. No terminal disclaimer is required. Petitioner has met the requirements for revival pursuant to 37 CFR 1.137(b).

Given that a pre-appeal brief request for review was filed with the notice of appeal, this decision does not set forth a period for filing an appeal brief.

Technology Center AU 2169 has been advised of this decision. The application file is, thereby, forwarded to the Technology Center for processing of the Notice of Appeal and for action on the pre-appeal brief request for review.

Telephone inquiries related to this decision should be directed to the undersigned at (571) 272-3219.

Nancy Johnson
Senior Petitions Attorney
Office of Petitions

UNITED STATES PATENT AND TRADEMARK OFFICE

Commissioner for Patents
United States Patent and Trademark Office
P.O. Box 1450
Alexandria, VA 22313-1450
www.uspto.gov

The Dow Chemical Company
Intellectual Property Section
P.O. Box 1967
Midland, MI 48641-1967

COPY MAILED

NOV 1 0 2005

OFFICE OF PETITIONS

In re Application of :
Sanford et al. :
Application No. 10/153,131 : DECISION ON PETITION
Filed: May 21, 2002 :
Attorney Docket No. 61913B :

This is a decision on the petition under 37 CFR 1.59, which is being treated as a petition under 37 CFR 1.182,[1] filed September 6, 2005, requesting that the Office "withdraw" the terminal disclaimer submitted on June 30, 2005.

Applicants asserted that the terminal disclaimer of June 30, 2005, inadvertently referenced an incorrect application number. With the present petition, applicants filed a terminal disclaimer, referencing the correct application number, and paid a $200.00 petition fee.

Accordingly, the petition is granted.

The current fee for filing a petition under 37 CFR 1.182 is $400.00. Therefore, the Office will charge the difference of $200.00 to applicants' Deposit Account, as authorized.

This matter is being referred to Technology Center Art Unit 1712 for correction of records consistent with this decision.

[1] Upon reviewing the present petition, it appears that applicants are seeking to withdrawal the prior-filed terminal disclaimer rather than having the document expunged. The Office's reasoning is based on the fact that this application has been scanned into the Image File Wrapper System and published on July 17, 2003. Therefore, the application, as well as the terminal disclaimer of June 30, 2005, are available for viewing in public PAIR Furthermore, applicants did not provide any information as to why the expungement of the terminal disclaimer is appropriate pursuant to 37 CFR 1.59(b).

Telephone inquiries relative to this decision should be directed to the undersigned at (571) 272-3211.

Christina Tartera Donnell

Christina Tartera Donnell
Senior Petitions Attorney
Office of Petitions

UNITED STATES PATENT AND TRADEMARK OFFICE

Commissioner for Patents
United States Patent and Trademark Office
P.O. Box 1450
Alexandria, VA 22313-1450
www.uspto.gov

WOLF GREENFIELD (Microsoft Corporation)
C/O WOLF, GREENFIELD & SACKS, P.C.
600 ATLANTIC AVENUE
BOSTON MA 02210-2206

MAILED

JUN 14 2010

OFFICE OF PETITIONS

In re Patent No. 6,738,135
Issued: May 18, 2004
Application No: 10/153,135
Filed: May 20, 2002
Attorney Docket No. 14294

This is a decision on the petition, filed March 22, 2010, under 37 CFR 1.378(c) to accept the unintentionally delayed payment of maintenance fee for the above-identified patent.

The petition is **GRANTED**.

The patent issued May 18, 2004. The grace period for paying the 3.5-year maintenance fee expired at midnight May 18, 2008. Therefore, since the petition was filed within twenty-four months after the six-month grace period provided in 37 CFR 1.362(e), this petition was timely filed under the provisions of 37 CFR 1.378(c).

The maintenance fee of $490.00 and the surcharge of $1640.00 were received March 22, 2010. The above-identified patent is hereby reinstated as of the mail date of this decision.

Telephone inquiries concerning this matter may be directed to the undersigned at (571) 272-3222.

Kenya A. McLaughlin
Petitions Attorney
Office of Petitions

SPE RESPONSE FOR CERTIFICATE OF CORRECTION

Paper No.: ——

DATE : 1/18/07

TO SPE OF : ART UNIT 1774

SUBJECT : Request for Certificate of Correction for Appl. No.: 10/153150 Patent No.: 7078083 B2

Please respond to this request for a certificate of correction within 7 days.

Please review the requested changes/corrections as shown in the **COCIN** document(s) in the IFW application image. No new matter should be introduced, nor should the scope or meaning of the claims be changed.

Please complete the response (see below) and forward the completed response to scanning using document code **COCX**.

Virginia Tolbert
Certificates of Correction Branch

703-308-9390 ext. 113

Thank You For Your Assistance

The request for issuing the above-identified correction(s) is hereby:
Note your decision on the appropriate box.

- ☒ **Approved** — All changes apply.
- ☐ **Approved in Part** — Specify below which changes do not apply.
- ☐ **Denied** — State the reasons for denial below.

Comments: _____

SPE

1774
Art Unit

UNITED STATES PATENT AND TRADEMARK OFFICE

Commissioner for Patents
United States Patent and Trademark Office
P.O. Box 1450
Alexandria, VA 22313-1450
www.uspto.gov

Paper No.

THOMPSON COBURN, LLP
ONE US BANK PLAZA
SUITE 3500
ST LOUIS MO 63101

COPY MAILED
OCT 0 2 2006
OFFICE OF PETITIONS

In re Application of :
Indeck et al. : DECISION ON PETITION
Application No. 10/153,151 :
Filed: May 21, 2002 :
Attorney Docket No. 53047/9017:

This is a decision on the "Petition Under 37 C.F.R. 1.181(a) and MPEP 711.03(c)(I) to Withdraw Holding of Abandonment Based on Evidence that the Notice of Allowance was Withdrawn," filed June 9, 2006. In the event that the Office is unwilling to grant this petition, applicants petition in the alternative for revival of the unintentionally abandoned application pursuant to 37 CFR 1.137(b).

The petition under § 1.181 is **DISMISSED**.

The petition under § 1.137(b) is **GRANTED**.

BACKGROUND

The above-identified application became abandoned for failure to timely pay the issue fee and publication fee within three months of the mailing date of the Notice of Allowance and Fee(s) Due mailed July 18, 2005. This Notice set a three-month nonextendable period for response. No response having been filed, the application became abandoned by operation of law on October 19, 2005. A courtesy Notice of Abandonment was mailed on April 25, 2006.

Petitioner argues that the holding of abandonment should be withdrawn because the examiner had withdrawn the July 18, 2005

notice of allowance, thus obviating the need for applicant to pay the issue fee set forth therein.

REGARDING PETITION TO WITHDRAW HOLDING OF ABANDONMENT

The Notice of Allowance and Fee(s) Due mailed July 18, 2005 clearly and boldly states:

> THE ISSUE FEE AND PUBLICATION FEE (IF REQUIRED) MUST BE PAID WITHIN THREE MONTHS FROM THE MAILING DATE OF THIS NOTICE OR THIS APPLICATION SHALL BE REGARDED AS ABANDONED. THIS STATUTORY PERIOD CANNOT BE EXTENDED.

37 CFR § 1.2 provides, in pertinent part, that:

> … The action of the Patent and Trademark Office will be based exclusively on the written record in the Office. No attention will be paid to any alleged oral promise, stipulation, or understanding in relation to which there is disagreement or doubt.

It is undisputed that no written communication was mailed to applicant restarting the period for response set in the Notice of Allowance mailed June 18, 2005. September 19, 2005 arrived with no change in the requirement to pay fees by that date or to have the application regarded as abandoned. Yet, applicant did not pay the required fees by September 19, 2005 (or file a petition to withdraw from issue).

Petitioner indicates that he was awaiting action on an amendment filed July 15, 2005, which crossed in the mail with the Notice of Allowance. Petitioner argued that prior to the due date for response on October 17 and 18, 2005, the attorney telephoned the Examiner to resolve whether the amendment filed July 15, 2005 would be entered. Petitioner states that as a result of these discussions the Examiner agreed to withdraw the July 18 Notice of Allowance and enter the July 15 amendment. As a result, petitioner did not pay the issue fee.

It is noted that no withdrawal of the July 18 Notice of Allowance has ever been entered. Petitioner argues that the response filed February 17, 2006 confirms that the Notice of Allowance was withdrawn.

The expectations for action by the applicant and the requirements of the examiner are set forth in the written record, including any modifications or corrections.

Furthermore, the examiner does not have the authority to extend the period for response to a Notice of Allowance. The examiner stating that an applicant does not have to pay the fee required in the Notice of Allowance is not effective to avoid abandonment for failure to pay the fee within the time required by the Notice (or to invalidate the Notice). As long as the Notice of Allowance was not vacated or the application withdrawn from issue, the application was subject to abandonment for failure to timely pay the issue fee and publication fee. The statute requires, as follows:

35 U.S.C. 151 Issue of patent.

> If it appears that applicant is entitled to a patent under the law, a written notice of allowance of the application shall be given or mailed to the applicant. The notice shall specify a sum, constituting the issue fee or a portion thereof, which shall be paid within three months thereafter.
>
> Upon payment of this sum the patent shall issue, but if payment is not timely made, the application shall be regarded as abandoned.
>
> ...
>
> If any payment required by this section is not timely made, but is submitted with the fee for delayed payment and the delay in payment is shown to have been unavoidable, it may be accepted by the Director as though no abandonment or lapse had ever occurred.

Finally, the mailing of a response to the 312 amendment does not confirm withdrawal of the Notice of Allowance.

REGARDING PETITION TO REVIVE

The petition meets all requirements for revival under 37 CFR 1.137(b). The petition includes the required reply in the form of payment of the Issue Fee and Publication Fee; payment of the petition fee set forth in 37 CFR § 1.17(m); and the required

statement of unintentional delay. No terminal disclaimer is required.

It is noted that the petition includes authorization to charge the required replies to the Notice, the issue fee and publication fee. However, the petition does not include a completed Issue Fee Transmittal- Form 85(b). Applicants may wish to consider promptly filing such a form to indicate on the patent information such as the name of the assignee.

CONCLUSION

It is concluded that petitioner has failed to show that withdrawal of the holding of abandonment is warranted. Nonetheless, the petition for revival is granted.

The Office of Patent Publication has been advised of this decision. The application is, thereby, forwarded for processing into a patent.

Telephone inquiries concerning this matter should be directed to the undersigned at (571) 272-3219.

Nancy Johnson
Senior Petitions Attorney
Office of Petitions

UNITED STATES PATENT AND TRADEMARK OFFICE

COMMISSIONER FOR PATENTS
UNITED STATES PATENT AND TRADEMARK OFFICE
P.O. BOX 1450
ALEXANDRIA, VA 22313-1450
www.uspto.gov

ALLERGAN, INC., LEGAL DEPARTMENT
2525 DUPONT DRIVE, T2-7H
IRVINE CA 92612-1599

COPY MAILED
NOV 29 2005
OFFICE OF PETITIONS

Applicant: Gil et al.
Appl. No.: 10/153,154
Filing Date: May 21, 2002
Title: NOVEL METHODS AND COMPOSITIONS FOR ALLEVIATING PAIN
Attorney Docket No.: 66872-019 (P-AR 4931)
Pub. No.: US 2003/0229088 A1
Pub. Date: December 11, 2003

This is a decision on the request for a corrected patent application publication under 37 CFR 1.221(b), filed on February 11, 2004, for the above-identified application.

The request is DISMISSED.

Applicant requests that the application be republished because the patent application publication contains numerous material errors in the specification and claims.

37 CFR 1.221 (b) is applicable "only when the Office makes a material mistake which is apparent from Office records.... Any request for a corrected publication or revised patent application publication other than provided as provided in paragraph (a) of this section must be filed within two months from the date of the patent application publication. This period is not extendable." A material mistake must affect the public's ability to appreciate the technical disclosure of the patent application publication, to determine the scope of the patent application publication, or to determine the scope of the provisional rights that an applicant may seek to enforce upon issuance of a patent. [1]

The request cannot be granted because the request does give an indication where the correct text for the material errors appears in the application.

Applicant is given 2 months to supply the required the information and submit a renewed request for republication.

The applicant is advised that a "request for republication of an application previously published" may be filed under 37 CFR 1.221(a). Such a request for republication "must include a copy of the application compliance with the Office's electronic filing system requirements and be accompanied by the publication fee set forth in § 1.18(d) and the processing fee set forth in

[1] Changes to Implement Eighteen-Month Publication of Patent Applications, 65 FR 57023, 57038 (Sept. 20, 2000), 1239, Off. Gaz. Pat. Office Notices 63, 75 (Oct. 10, 2000) (final rule).

§ 1.17(i)." If the request for republication does not comply with the electronic filing system requirements, the republication will not take place and the publication fee set forth in § 1.18(d) will be refunded. The processing fee will be retained.

Any request for republication under 37 CFR 1.221(a), must be submitted via the EFS system and questions or request for reconsideration of the decision, should be addressed as follows:

By mail to: Mail Stop PGPUB
Commissioner for Patents
P.O. Box 1450
Alexandria, Va. 22313-1450

By facsimile: 571-273-8300

Inquiries relating to this matter may be directed to Mark Polutta at (571) 272-7709 (voice).

Mark O. Polutta
Senior Legal Advisor
Office of Patent Legal Administration
Office of the Deputy Commissioner
for Patent Examination Policy

UNITED STATES PATENT AND TRADEMARK OFFICE

Commissioner for Patents
United States Patent and Trademark Office
P.O. Box 1450
Alexandria, VA 22313-1450
www.uspto.gov

BAXTER HEALTHCARE CORPORATION
ONE BAXTER PARKWAY
DF2-2E
DEERFIELD, IL 60015

COPY MAILED

JUL 20 2005

OFFICE OF PETITIONS

In re Application of Abinash Nayak et al Application No. 10/153,165 Filed: May 21, 2002 Atty Dkt No. F-5481 DIV (0360-0158.01)	DECISION GRANTING PETITION UNDER 37 CFR 1.137(b)

This is a decision on the petition under 37 CFR 1.137(b), filed April 13, 2005, to revive the above-identified application.

The petition is **GRANTED**.

This application became abandoned for failure to timely pay the issue and publication fees on or before February 17, 2005.

The petition satisfies the conditions for revival pursuant to the provisions of 37 CFR 1.137(b) in that (1) the reply in the form of payment of the $1,400 issue fee and $300 publication fee; (2) the $1,500 petition fee; and (3) the required statement of unintentional delay have been received. Accordingly, the issue and publication fees are accepted as having been unintentionally delayed.

Telephone inquiries concerning this decision should be directed to the undersigned at (571) 272-3218.

This matter is being referred to Publishing Division.

Frances Hicks
Petitions Examiner
Office of Petitions

UNITED STATES PATENT AND TRADEMARK OFFICE

Commissioner for Patents
United States Patent and Trademark Office
P.O. Box 1450
Alexandria, VA 22313-1450
www.uspto.gov

Mailed: DEC - 3 2004

spg
Paper Number _____

In re application of
Naoto Ohshima et al.
Serial No. 10/153,184
Filed: May 23,2002
For: SILVER HALIDE EMULSION AND SILVER HALIDE PHOTOSENSITIVE MATERIAL

DECISION ON PETITION

This is a response to the PETITION TO WITHDRAW HOLDING OF ABANDONMENT UNDER 37 C.F.R. § 1.181, filed June 24, 2004. The petition requests that the abandonment, as set forth in the Notice of Abandonment of March 23,2004, for failure to timely file a proper reply to the Office letter mailed July 30, 2003 be withdrawn since the applicants did timely file a reply on January 30,2004. (Copies of the papers filed January 30, 2004 are attached to the instant petition as well as a copy of the USPTO date stamped postcard receipt.)

DECISION

The instant request has been accepted as a petition to withdraw the holding of abandonment under the provisions of 37 CFR 1.181 (no fee) - no abandonment-in-fact. A review of the evidence presented reveals that applicant's reply was properly filed on January 30, 2004 as evidenced by the USPTO date stamped return receipt postcard indicating receipt of the reply at the USPTO on January 30, 2004. Accordingly, any holding of abandonment for failure to timely file a proper reply to the Office letter mailed July 30, 2003 is hereby vacated, and the application is returned to pending status.

The application shall be forwarded to the examiner for entry, processing and consideration of the reply originally filed July 30, 2003.

The Petition is **GRANTED**.

Jacqueline Stone, Director
Technology Center 1700
Chemical and Materials Engineering

Jennifer M. Hayes
Sughrue Mion, PLLC
2100 Pennsylvania Avenue, NW
Washington, DC 20037-3213

UNITED STATES PATENT AND TRADEMARK OFFICE

Commissioner for Patents
United States Patent and Trademark Office
P.O. Box 1450
Alexandria, VA 22313-1450
www.uspto.gov

DARBY & DARBY, P.C.
P.O. BOX 770
Church Street Station
New York, NY 10008-0770

COPY MAILED

NOV 09 2007

OFFICE OF PETITIONS

In re Application of :
Narayan Sundararajan, et. al. :
Application No. 10/153,189 : ON PETITION
Filed: May 20, 2002 :
Attorney Docket No. 21058/0206459-US0 :

This is a decision on the petition under 37 CFR 1.137(b), filed on February 5, 2007, to revive the above-identified application.

The application became abandoned for failure to file a proper reply to the non-final Office action mailed August 2, 2006.

The petition is **dismissed**.

A grantable petition under 37 CFR 1.137(b) must be accompanied by: (1) the required reply, unless previously filed; (2) the petition fee as set forth in 37 CFR 1.17(m); (3) a statement that the entire delay in filing the required reply from the due date for the reply until the filing of a grantable petition pursuant to 37 CFR 1.137(b) was unintentional; and (4) any terminal disclaimer (and fee as set forth in 37 CFR 1.20(d)) required by 37 CFR 1.137(d). Where there is a question as to whether either the abandonment or the delay in filing a petition under 37 CFR 1.137 was unintentional, the Commissioner may require additional information. See MPEP 711.03(c)(III)(C) and (D). The instant petition lacks item(s) (1).

A review of the record shows that the amendment filed on November 2, 2006, was considered as a draft amendment and not an actual response to the non-final Office action mailed on August 2, 2006. Therefore, petitioner need to submit a proper amendment to the claims as discussed in the Interview Summary between the examiner and the attorney of record dated on November 13, 2006.

In view of the above, revival of the instant application cannot occur until a proper reply has been received.

Any request for reconsideration of this decision must be submitted within **TWO (2) MONTHS** from the mail date of this decision. Extensions of time under 37 CFR 1.136(a) are permitted. The reconsideration request should include a cover letter entitled "Renewed Petition under 37 CFR 1.137(b)." This is **not** a final agency action within the meaning of 5 U.S.C. § 704.

Further correspondence with respect to this matter should be addressed as follows:

By mail: Mail Stop PETITION
Commissioner for Patents
P. O. Box 1450
Alexandria, VA 22313-1450

By hand: U. S. Patent and Trademark Office
Customer Service Window, Mail Stop Petitions
Randolph Building
401 Dulany Street
Alexandria, VA 22314

The centralized facsimile number is **(571) 273-8300.**

Telephone inquiries concerning this decision should be directed to the undersigned at (571) 272-3226.

Andrea Smith
Petitions Examiner
Office of Petitions

UNITED STATES PATENT AND TRADEMARK OFFICE

COMMISSIONER FOR PATENTS
UNITED STATES PATENT AND TRADEMARK OFFICE
P.O. BOX 1450
ALEXANDRIA, VA 22313-1450
www.uspto.gov

Intel Corporation
c/o Darby & Darby, P.C.
P.O. Box 770
Church Street Station
New York, NY 10008-0770

COPY MAILED

DEC 04 2007

OFFICE OF PETITIONS

In re Application of :
Narayan Sundararajan, et. al. :
Application No. 10/153,189 :
Filed: May 20, 2002 :
Attorney Docket No. 21058/0206459-US0 :

CORRECTED DECISION

This is a corrected decision on the petition under 37 CFR 1.137(b) filed February 5, 2007, to revive the above-identified application.

The decision mailed on November 9, 2007, is hereby vacated for the reason stated below.

A review of the record shows that the response filed November 2, 2006 was an actual reply to the non-final Office action mailed August 2, 2006; therefore, the petition is **GRANTED**.

The Office wishes to apologize to petitioner for this error and any inconvenience caused is regretted.

The patented file is being forwarded to the Files Repository.

Telephone inquiries concerning this decision should be directed to the undersigned at (571) 272-3226.

Andrea Smith
Petitions Examiner
Office of Petitions

UNITED STATES PATENT AND TRADEMARK OFFICE

UNITED STATES DEPARTMENT OF COMMERCE
United States Patent and Trademark Office
Address: COMMISSIONER FOR PATENTS
P.O. Box 1450
Alexandria, Virginia 22313-1450
www.uspto.gov

APPLICATION NO.	FILING DATE	FIRST NAMED INVENTOR	ATTORNEY DOCKET NO.	CONFIRMATION NO.
10/153,189	05/20/2002	Narayan Sundararajan	21058/0206459-US0	7595

7590 02/12/2008

Intel Corporation
c/o DARBY & DARBY P.C.
P.O. BOX 770
CHURCH STREET STATION
NEW YORK, NY 10008-0770

EXAMINER
SISSON, BRADLEY L

ART UNIT	PAPER NUMBER
1634	

MAIL DATE	DELIVERY MODE
02/12/2008	PAPER

DECISION DISMISSING PETITION UNDER 37 CFR 1.138(d)

The declaration of express abandonment will not be recognized

This is in response to the petition under 37 CFR 1.138(d), requesting for a refund of any previously paid search fee and excess claims fee in the above-identified application.

The petition is dismissed.

The express abandonment will **not** be recognized for the reason(s) indicated below:

1. ☒ The petition was not filed in sufficient time to permit the appropriate officials to recognize the abandonment before an examination has been made of the application. See 37 CFR 1.138(d).
2. ☐ The petition was not signed by a party authorized by 37 CFR 1.33(b)(1), (3) or (4).
3. ☐ The application is not an application filed under 35 U.S.C. 111(a) on or after December 8, 2004.
4. ☐ The petition for express abandonment under 1.138(d) is dismissed because the applicant did not pay any search fee and excess claims fees in the above-identified application.

Telephone inquiries should be directed to the Office of Data Management at (571) 272-4200.

Tammy J. Kaehler

Patent Publication Branch
Office of Data Management

FORM PET651D (Rev. 08/07)

UNITED STATES PATENT AND TRADEMARK OFFICE

Commissioner for Patents
United States Patent and Trademark Office
P.O. Box 1450
Alexandria, VA 22313-1450
www.uspto.gov

William O'Driscoll - 12-1
Trane
3600 Pammel Creek Road
La Crosse WI 54601

COPY MAILED

FEB 27 2008

OFFICE OF PETITIONS

In re Application of :
Joel C. Vanderzee et al. :
Application No. 10/153,193 : ON PETITION
Filed: May 20, 2002 :
Attorney Docket No. D-2751/WOD :

This is a decision on the petition under 37 CFR 1.137(b), filed January 16, 2007, to revive the above-identified application.

The petition is **GRANTED**.

This application became abandoned as a result of petitioner's failure to file an appeal brief (and fee required by 37 CFR 41.20(b)(2)) within the time period provided in 37 CFR 41.37(a)(1). As an appeal brief (and appeal brief fee) was not filed within two (2) months of the Notice of Appeal filed October 10, 2006, and no extensions of time under the provisions of 37 CFR 1.136(a) were obtained, the appeal was dismissed and the proceedings as to the rejected claims were terminated. See 37 CFR 1.197(b). As no claim was allowed, the application became abandoned on January 11, 2007. See MPEP 1215.04.

The petition satisfies the requirements of 37 CFR 1.137(b) in that petitioner has supplied (1) the reply in the form of an appeal brief; (2) the petition fee of $1,500; and (3) an adequate statement of unintentional delay.

37 CFR 1.137(b)(3) requires a statement that "the entire delay in filing the required reply from the due date for the reply until the filing of a grantable petition pursuant to 37 CFR 1.137(b) was unintentional." Since the statement appearing in the petition varies from the language required by 37 CFR 1.137(b)(3), the statement is being construed as the required statement. Petitioner must notify the Office if this is not a correct reading of the statement appearing in the petition.

Telephone inquiries concerning this decision should be directed to Terri Williams at (571) 272-2991.

The application file is being referred to Technology Center AU 2837 for processing of the concurrently filed appeal brief.

Liana Walsh
Petitions Examiner
Office of Petitions

UNITED STATES PATENT AND TRADEMARK OFFICE

Commissioner for Patents
United States Patent and Trademark Office
P.O. Box 1450
Alexandria, VA 22313-1450
www.uspto.gov

NOV 22 2004

In re Application of	:	
Chase Weir	:	
Serial No: 10/153,224	:	DECISION ON PETITION
Filed: May 23, 2002	:	TO WITHDRAW AS ATTORNEY
For: METHOD AND SYSTEM FOR	:	
INTERATIVE TEACHING	:	

By papers filed on September 10, 2004, counsel has petitioned to withdraw as attorney of record in this application.

The petition is GRANTED.

Applicant is advised that the correspondence address for this application is:

Chase Weir
4411 Connecticut Ave., NW, Suite T407
Washington, DC 20008

E. Rollins-Cross, Director
Technology Center 3700

Cahn & Samuels, LLP
2000 P Street, NW, Suite 200
Washington, DC 20036

UNITED STATES PATENT AND TRADEMARK OFFICE

Commissioner for Patents
United States Patent and Trademark Office
P.O. Box 1450
Alexandria, VA 22313-1450
www.uspto.gov

REED INTELLECTUAL PROPERTY LAW GROUP
800 MENLO AVENUE, SUITE 210
MENLO PARK, CA 94025

COPY MAILED

NOV 1 5 2004

OFFICE OF PETITIONS

In re Patent No. 6,800,722 :
Issued: October 5, 2004 :
Application No. 10/153,229 :
Filed: May 21, 2002 :
Attorney Docket No. 8500-0261.20

NOTICE

This is a notice regarding your request for acceptance of a fee deficiency submission under 37 CFR 1.28. On September 1, 1998, the Court of Appeals for the Federal Circuit held that 37 CFR 1.28(c) is the sole provision governing the time for correction of the erroneous payment of the issue fee as a small entity. **See DH Technology v. Synergystex International, Inc. 154 F.3d 1333, 47 USPQ2d 1865 (Fed. Cir. Sept. 1, 1998).**

The Office no longer investigates or rejects original or reissue applications under 37 CFR 1.56. **1098 Off. Gaz. Pat. Office 502 (January 3, 1989)**. Therefore, nothing in this Notice is intended to imply that an investigation was done.

Your fee deficiency submission under 37 CFR 1.28 is hereby **ACCEPTED**.

Inquiries related to this communication should be directed to the Office of Petitions Staff at (571) 272-3201.

Sherry D. Brinkley
Petitions Examiner
Office of Petitions
Office of the Deputy Commissioner
for Patent Examination Policy

UNITED STATES PATENT AND TRADEMARK OFFICE

COMMISSIONER FOR PATENTS
UNITED STATES PATENT AND TRADEMARK OFFICE
WASHINGTON, DC 20231
www.uspto.gov

Paper No. 6

MAIL

DEC 0 3 2002

DIRECTOR OFFICE
TECHNOLOGY CENTER 2600

FENWICK & WEST LLP
TWO PALO ALTO SQUARE
PALO ALTO CA 94306

In re Application of	:	
Lundquist et al.	:	
Application No. 10/153,230	:	DECISION ON REQUEST TO
Filed: May 20, 2002	:	WITHDRAW AS ATTORNEY
For: SYSTEM AND METHOD FOR USE OF A VARIABLE OPTICAL ATTENUATOR IN AN OPTICAL NETWORK	:	

This is a decision on the request to withdraw as attorney/agent of record filed on August 21, 2002.

A grantable request to withdraw as attorney/agent of record must:
(1) indicate the present mailing address of the attorney(s)/agent(s) who seek(s) to withdraw, and
(2) be signed by each attorney/agent seeking to withdraw or clearly be signed on their behalf, and
(3) be *approved* at least thirty (30) days prior to the maximum extendable period for response to any outstanding Office Action, and
(4) indicate the address to which future correspondence should be mailed.

Petitioner has met all of the above. Accordingly, the request is **GRANTED**.

All attorneys of record are removed from record.

All future communications from the Office will be directed to the address listed below until otherwise notified by applicant. Applicant is reminded of the obligation to promptly notify the Patent and Trademark Office of any change in correspondence address to ensure receipt of all communications from the Office.

Reinhard J. Eisenzopf
Special Program Examiner
Technology Center 2600
Communications
(703) 305-4711

cc: Mr. David Fox
Cantor Colburn LLP
55 Griffin Road South
Bloomfield, CT 06002

UNITED STATES PATENT AND TRADEMARK OFFICE

Commissioner for Patents
United States Patent and Trademark Office
P.O. Box 1450
Alexandria, VA 22313-1450
www.uspto.gov

FEB - 7 2006

CHIRON CORPORATION
INTELLECTUAL PROPERTY R338
P. O. BOX 8097
EMERYVILLE, CA 94662-8097

In re Application of	:
Christopher Reinhard et al	:
Serial No.: 10/153,242	: PETITION DECISION
Filed: May 22, 2002	:
Attorney Docket No.: 59516-10/PP	:

This is in response to the petition under 37 CFR 1.181, filed December 9, 2005, requesting withdrawal of abandonment based on timely filing of a reply.

A review of the file history shows that the examiner mailed an Office action to applicants on February 16, 2005, setting a 30-day shortened statutory period for reply. Upon failure to receive a reply the application was held abandoned by Notice of Abandonment mailed November 1, 2005. Applicants state that a reply was submitted on March 25, 2005, including a request and fee for a one month extension of time, and provide an Office date stamped postcard evidencing receipt thereof on March 29, 2005. In view of the evidence presented, the Notice of Abandonment is withdrawn and the application restored to pending status with the mailing of this decision.

The petition is **GRANTED**.

The application will be forwarded to the examiner for further consideration.

Should there be any questions about this decision please contact William R. Dixon, Jr., by letter addressed to Director, TC 1600, at the address listed above, or by telephone at 571-272-0519 or by facsimile sent to the general Office facsimile number, 571-273-8300.

Geroge C. Elliott
Director, Technology Center 1600

UNITED STATES PATENT AND TRADEMARK OFFICE

Commissioner for Patents
United States Patent and Trademark Office
P.O. Box 1450
Alexandria, VA 22313-1450
www.uspto.gov

COPY MAILED

NOV 26 2007

OFFICE OF PETITIONS

RATNERPRESTIA
P O BOX 980
VALLEY FORGE PA 19482-0980

In re Application of :
Kujawski : DECISION ON PETITION
Application No. 10/153,322 :
Filed: May 22, 2002 :
Docket No.: BSI-502US :

This is a decision on the petition to withdraw the holding of abandonment under 37 CFR 1.181, filed September 13, 2007.

This application was held abandoned June 7, 2007 for failure to timely submit a proper reply to the non-final Office action mailed March 6, 2007. This decision precedes Notice of Abandonment.

Petitioner asserts that a response to the non-final Office action was timely submitted on May 8, 2007 and have provided as proof of mailing and proof of USPTO receipt a return postcard dated May 10, 2007 acknowledging receipt of the reply. Further, the copy of the reply submitted herewith bears a certificate of mailing date of May 8, 2007 in accordance with 37 CFR 1.8.

The original response submitted May 10, 2007 has not been located in the application file. However, the arguments and evidence submitted are found convincing.

In view of the evidence thereof, the petition to withdraw the holding of abandonment is hereby **GRANTED**.

The Notice of Abandonment is hereby **VACATED** and the holding of abandonment is **WITHDRAWN**.

The application file is being forwarded to the Technology Center 3700 for further processing.

Telephone inquiries concerning this matter may be directed to the undersigned at (571) 272-3205.

Alesia M. Brown
Petitions Attorney
Office of Petitions

UNITED STATES PATENT AND TRADEMARK OFFICE

Commissioner for Patents
United States Patent and Trademark Office
P.O. Box 1450
Alexandria, VA 22313-1450
www.uspto.gov

DEC - 3 2003

Paper No. 8

In re Application of FRENCH ET AL.
Appl. No.: 10/153,370
Filed: May 21, 2002
For: FUEL INJECTOR DRIVER CIRCUIT WITH ENERGY STORAGE APPARATUS

WITHDRAWAL FROM ISSUE
37 CFR 1.313

The purpose of this communication is to inform you that the above-identified application is being withdrawn from issue after payment of the issue fee due to the unpatentability of one or more claims. See 37 CFR 1.313(b)(3).

The issue fee is refundable upon request. If, however, the application is again found allowable, the issue fee can be applied toward payment of the issue fee in the amount identified on the new Notice of Allowance and Issue Fee Due upon written request. This request and any balance due must be received on or before the due date noted in the new Notice of Allowance and Issue Fee Due in order to prevent abandonment of the application.

Telephone inquiries should be directed to Michael Sherry, Supervisory Patent Examiner, at (703) 308-1680.

The application is being forwarded to the examiner for action.

Richard K. Seidel
Director
Patent Examining Technology Center 2800

RECEIVED
DEC 1 7 2003
OFFICE OF PETITIONS

Patrick S. Yoder
Fletcher, Yoder & Van Someren
P.O. Box 692289
Houston, TX 77269-2289

UNITED STATES PATENT AND TRADEMARK OFFICE

COMMISSIONER FOR PATENTS
UNITED STATES PATENT AND TRADEMARK OFFICE
P.O. BOX 1450
ALEXANDRIA, VA 22313-1450
www.uspto.gov

Paper No. 10

PATRICK S. YODER
FLETCHER, YODER & VAN SOMEREN
P.O. BOX 692289
HOUSTON TX 77269-2289

COPY MAILED
JAN 07 2004
OFFICE OF PETITIONS

In re Application of :
Michael J. French, et al :
Application No. 10/153,370 : ON PETITION
Filed: May 21, 2002 :
Atty Docket No. BRPR:0037--1/YOD :

This is in response to the communication filed September 11, 2003, requesting withdrawal of a petition under 37 CFR 1.314 filed August 14, 2003, to defer issuance of the patent.

It does not appear that the instant communication or the petition is signed by an attorney of record. However, in accordance with 37 CFR 1.34(a), the signature of Timothy J. Ziolkowski appearing on the correspondence shall constitute a representation to the United States Patent and Trademark Office that he is authorized to represent the particular party in whose behalf he acts. However, if Mr. Ziolkowski desires to receive correspondence regarding this file, the appropriate power of attorney documentation must be submitted. A courtesy copy of this decision is being mailed to Mr. Ziolkowski, the petitioner herein. However, until otherwise instructed, all future correspondence regarding this application file will be directed solely to the above-noted correspondence address of record.

The request is granted. The petition under 37CFR 1.314 is considered DISMISSED as moot.

Telephone inquiries concerning this decision may be directed to the undersigned at (703) 305-9220.

Sherry D. Brinkley
Petitions Examiner
Office of Petitions
Office of the Deputy Commissioner
for Patent Examination Policy

cc: Timothy J. Ziolkowski
Ziolkowski Patent Solution Group, LLC
14135 Noth Cedarburg Road
Mequon, WI 53097-1418

UNITED STATES PATENT AND TRADEMARK OFFICE

Commissioner for Patents
United States Patent and Trademark Office
P.O. Box 1450
Alexandria, VA 22313-1450
www.uspto.gov

Paper No. 10

LUCENT TECHNOLOGIES INC.
DOCKET ADMINISTRATOR
101 CRAWFORDS CORNER ROAD - ROOM 3J-219
HOLMDEL NJ 07733

COPY MAILED
JUN 1 8 2004
OFFICE OF PETITIONS

In re Application of :
Lentine, et al. :
Application No. 10/153,390 : ON PETITION
Filed: May 22, 2002 :
Attorney Docket No. 56115534-118528 :

For: DIGITAL PHASE SYNCHRONIZATION CIRCUIT

This is a decision on the petition under 37 CFR 1.137(a), filed May 3, 2004 (certificate of mailing date April 28, 2004), to revive the above-identified application. In the alternative, petitioners request consideration under 37 CFR 1.137(b).

The petition under 37 CFR 1.137(a) is **DISMISSED**.

The petition under 37 CFR 1.137(b) is **GRANTED**.

The above-identified application became abandoned for failure to timely reply to the Notice to File Missing Parts of Nonprovisional Application," (Notice) mailed June 27, 2002, which set an extendable period for reply of two (2) months. Having obtained no extensions of time under 37 CFR 1.136(a), this application became abandoned on August 28, 2002 for failure to reply. A Notice of Abandonment was mailed on December 11, 2003.

Petitioners allege that they did not receive the June 27, 2002 Notice.

A grantable petition to revive an abandoned application under 37 CFR 1.137(a) must be accompanied by (1) the required reply, unless previously filed. In a nonprovisional application abandoned for failure to prosecute, the required reply may be met by the filing of a continuing application. In an application or patent, abandoned or lapsed for failure to pay the issue fee or any portion thereof, the required reply must be the payment of the issue fee or any outstanding

balance thereof; (2) the petition fee as set forth in § 1.17(l); (3) a showing to the satisfaction of the Commissioner that the entire delay in filing the required reply from the due date for the reply until the filing of a grantable petition pursuant to this paragraph was unavoidable; and (4) any terminal disclaimer (and fee as set forth in § 1.20 (d)) required pursuant to paragraph (c) of this section. This petition does not satisfy requirement (3).

With respect to (3), the showing of record is inadequate to establish unavoidable delay within the meaning of 37 CFR 1.137(a). Specifically, an application is "unavoidably" abandoned only where petitioner, or counsel for petitioner, takes all action necessary for a proper response to the outstanding Office action, but through the intervention of unforeseen circumstances, such as failure of mail, telegraph, telefacsimile, or the negligence of otherwise reliable employees, the response is not timely received in the Office. Ex parte Pratt, 1887 Dec. Comm'r Pat. 31 (Comm'r Pat. 1887).

The Commissioner may revive an abandoned application if the delay in responding to the relevant outstanding Office requirement is shown to the satisfaction of the Commissioner to have been "unavoidable". 35 USC § 133. Decisions on reviving abandoned applications have adopted the reasonably prudent person standard in determining if the delay was unavoidable. Ex parte Pratt, 1887 Dec. Comm'r Pat. 31, 32-33 (Comm'r Pat. 1887)(the term 'unavoidable' "is applicable to ordinary human affairs, and requires no more or greater care or diligence than is generally used and observed by prudent and careful men in relation to their most important business"); In re Mattullath, 38 App. D.C. 497, 514-15 (D.C. Cir. 1912); Ex parte Henrich, 1913 Dec. Comm'r Pat. 139, 141 (Comm'r Pat. 1913). In addition, decisions on revival are made on a "case-by-case basis, taking all the facts and circumstances into account." Smith v. Mossinghoff, 671 F.2d 533, 538, 213 USPQ 977, 982 (D.C. Cir. 1982). Finally, a petition to revive an application as unavoidably abandoned cannot be granted where a petitioner has failed to meet his or her burden of establishing the cause of the unavoidable delay. Haines v. Quigg, 673 F. Supp. 314, 5 USPQ2d 1130 (N.D. Ind. 1987).

The showing required to establish non-receipt of an Office communication must include:

1. A statement from the practitioner stating that the Office communication was not received by the practitioner and attesting to the fact that a search of the file jacket and docket records indicates that the Office communication was not received.
2. A copy of the docket record where the non-received Office communication would have been entered had it been received and docketed must be attached to and referenced in practitioner's statement.[1]

A review of the record indicates no irregularity in the mailing of the June 27, 2002 Notice and in the absence of any irregularity there is a strong presumption that the communication was properly mailed to applicants at the correspondence address of record. This presumption may be overcome by a showing that the aforementioned communication was not in fact received.

---

[1] See notice entitled "Withdrawing the Holding of Abandonment When Office Actions Are Not Received," 1156 O.G. 53 (November 16, 1993).

Petitioners have not proven non-receipt because practitioner did not include a copy of the docket record where the non-received Office communication would have been entered had it been received and docketed. In addition, practitioner did not attest to the fact that a thorough, yet fruitless search of the file jacket and docket records was conducted. Baker & McKenzie was the firm empowered at the time the June 27, 2002 Notice was mailed. Baker & McKenzie has not provided sufficient evidence of non-receipt of the Notice.

The petition under 37 CFR 1.137(a) is **DISMISSED**. A $110.00 petition fee was charged to deposit account no. 12-2325 on May 5, 2004.

With respect to the requirements for revival under 37 CFR 1.137(b): Applicants have submitted a reply in the form of an executed declaration and authorization to charge any required fee. Therefore, the $130.00 surcharge for late submission of a declaration required by the June 27, 2002 Notice will be charged to deposit account no. 12-2325. Petitioners have submitted an acceptable statement of the unintentional nature of the delay in responding to the June 27, 2002 Notice. Finally, the petition fee required for filing a petition under 37 CFR 1.137(b) will be charged to deposit account no. 12-2325.

The requirements for revival under 37 CFR 1.137(b) being met, the petition under 37 CFR 1.137(b) is **GRANTED**.

After the mailing of this decision the application will be returned to the Office of Initial Patent Examination for further processing.

Telephone inquiries pertaining to this matter may be directed to the undersigned at (703) 308-6712.

E. Shirene Willis
Senior Petitions Attorney
Office of Petitions

UNITED STATES PATENT AND TRADEMARK OFFICE

Commissioner for Patents
United States Patent and Trademark Office
P.O. Box 1450
Alexandria, VA 22313-1450
www.uspto.gov

Paper No. 7

CHARLES R. SUTTON
LAW OFFICES OF ROGER HSU
201 S. LAKE AVE., STE. 302
PASADENA, CA 91101

COPY MAILED
MAY 0 7 2004
OFFICE OF PETITIONS

In re Application of :
Wen-Yi Hsu :
Application No. 10/153,392 : ON PETITION
Filed: May 21, 2002 :
Attorney Docket No. 13203 :

This is a decision on the petition under 37 CFR 1.137(b), filed April 21, 2004, to revive the above-identified application.

The petition is **GRANTED**.

The above-identified application became abandoned for failure to reply in a timely manner to the Notice to File Corrected Application Papers (Notice) mailed June 27, 2002. The Notice set a period for reply of two (2) months from the mail date of the Notice. No extensions of time under the provisions of 37 CFR 1.136(a) were obtained. Accordingly, the above-identified application became abandoned on August 28, 2002. A Notice of Abandonment was mailed on January 26, 2004.

The file is being forwarded to the Office of Initial Patent Examination for further processing.

Telephone inquiries concerning this matter may be directed to the undersigned at (703) 306-9200.

Edward J. Tannouse
Petitions Attorney
Office of Petitions
United States Patent and Trademark Office

UNITED STATES PATENT AND TRADEMARK OFFICE

Commissioner for Patents
United States Patent and Trademark Office
P.O. Box 1450
Alexandria, VA 22313-1450
www.uspto.gov

Wang, Hartmann & Gibbs, PC
1301Dove Street, #1050
Newport Beach CA 92660

COPY MAILED

MAY 18 2007

OFFICE OF PETITIONS

In re Application of	:	
Wen-Yi Hsu	:	
Application No. 10/153,392	:	ON PETITION
Filed: May 21, 2002	:	
Attorney Docket No. 13203	:	

This is a decision on the petition under 37 CFR 1.137(b), filed November 3, 2006, to revive the above-identified application.

The petition is **GRANTED**.

The application became abandoned for failure to reply in a timely manner to the non-final Office action mailed, January 13, 2006, which set a shortened statutory period for reply of three (3) months. No extensions of time under the provisions of 37 CFR 1.136(a) was obtained. Accordingly, the application became abandoned on April 14, 2006.

The petition satisfies the requirements of 37 CFR 1.137(b) in that petitioner has supplied (1) the reply in the form of an Amendment and RCE; (2) the petition fee of $750; and (3) an adequate statement of unintentional delay.

It is not apparent whether the person signing the statement of unintentional delay was in a position to have firsthand or direct knowledge of the facts and circumstances of the delay at issue. Nevertheless, such statement is being treated as having been made as the result of a reasonable inquiry into the facts and circumstances of such delay. See 37 CFR 10.18(b) and Changes to Patent Practice and Procedure; Final Rule Notice, 62 Fed. Reg. 53131, 53178 (October 10, 1997), 1203 Off. Gaz. Pat. Office 63, 103 (October 21, 1997). In the event that such an inquiry has not been made, petitioner must make such an inquiry. If such inquiry results in the discovery that it is not correct that the entire delay in filing the required reply from the due date for the reply until the filing of a grantable petition pursuant to 37 CFR 1.137(b) was unintentional, petitioner must notify the Office.

Telephone inquiries concerning this decision should be directed to Terri Williams at (571) 272-2991.

The application file is being referred to Technology Center AU 2873 for appropriate action on the Amendment and RCE.

Liana Walsh
Petitions Examiner
Office of Petitions

cc: **Wen-Yi Hsu**
2060 S. Haven Avenue
Ontario, CA 91761

UNITED STATES PATENT AND TRADEMARK OFFICE

Commissioner for Patents
United States Patent and Trademark Office
P.O. Box 1450
Alexandria, VA 22313-1450
www.uspto.gov

Paper No.

Stephen C. Durant
MORRISON & FOERSTER LLP
Suite 500
3811 Valley Centre Drive
San Diego, CA 92130-2332

MAILED

JAN 2 7 2006

TECHNOLOGY CENTER 2100

In re Application of:
Santiago E. Becerra
Application No. 10/153,400
Filed: May 21, 2002
For: METHOD AND TOOL FOR CREATING GRAPHICAL AND INTERACTIVE REPRESENTATIONS OF INPUT AND OUTPUT DATA

DECISION ON REQUEST TO WITHDRAW AS ATTORNEY OR AGENT

This is a decision on the Request To Withdraw from Representation filed November 17, 2005.

A grantable request to withdraw as attorney of record should indicate thereon the present mailing addresses of the attorney(s) who is/are withdrawing from the record and of the applicant. The request for withdrawal must be signed by every attorney seeking to withdraw or contain a clear indication that one attorney is signing on behalf of another/others. A request to withdraw will not be approved unless at least 30 (thirty) days would remain between the date of approval and the later of the expiration date of a time to file a response or the expiration date of the maximum time period which can be extended under 37 C.F.R. э 1. 136(a). The effective date of withdrawal being the date of decision and not the date of request. See M.P.E.P. э 402.06. 37 C.F.R. э 1.36 further requires that the applicant or patent owner be notified of the withdrawal of the attorney or agent.

The request filed November 17, 2005 meets all the requirements. Accordingly the request is **GRANTED**.

All future communications from the Office will be directed to the below-listed address until otherwise notified by applicant. This correspondence address is provided by the withdrawn attorney(s). Applicant is reminded of the obligation to promptly notify the Patent and Trademark Office (Office) of any change in correspondence address to ensure receipt of all communications from the Office.

Vincent N. Trans
Special Program Examiner
Technology Center 2100
Computer Architecture, Software, and
Information Security
(571) 272-3613

cc: William Gallani
COOLEY GODWARD LLP
FIVE PALO ALTO SQUARE
300 EL CAMINO REAL
Palo Alto, CA 94306-2155

UNITED STATES PATENT AND TRADEMARK OFFICE

UNITED STATES DEPARTMENT OF COMMERCE
United States Patent and Trademark Office
Address: COMMISSIONER FOR PATENTS
P.O. Box 1450
Alexandria, Virginia 22313-1450
www.uspto.gov

William Gallani
COOLEY GODWARD LLP
FIVE PALO ALTO SQUARE
300 El Camino Real
Palo Alto, CA 94306-2155

Mail Date: 04/28/2010

Applicant	: Santiago E. Becerra JR.	: DECISION ON REQUEST FOR
Patent Number	: 7650576	: RECALCULATION of PATENT
Issue Date	: 01/19/2010	: TERM ADJUSTMENT IN VIEW
Application No	: 10/153,400	: OF WYETH AND NOTICE OF INTENT TO
Filed	: 05/21/2002	: ISSUE CERTIFICATE OF CORRECTION
		:

The Request for Recalculation is **GRANTED** to the extent indicated.

The patent term adjustment has been determined to be **591** days. The USPTO will *sua sponte* issue a certificate of correction reflecting the amount of PTA days determined by the recalculation.

Prior to the issuance of the certificate of correction, the USPTO will afford patentee an opportunity to be heard and request reconsideration. Accordingly, patentee has **one month or thirty (30) days**, whichever is longer, to file a request for reconsideration of this patent term adjustment calculation. See 35 U.S.C. 154(b)(3)(B)(ii) and 37 CFR 1.322(a)(4). No extensions of time will be granted under 37 CFR 1.136.

Patentee should use document code PET.OP if electronically filing a request for reconsideration of this patent term adjustment calculation. The patentee must also include the information required by 37 CFR 1.705(b)(2) and the fee required by 37 CFR 1.18(e). If patentee does not file a timely request for reconsideration of this patent term adjustment calculation including the information required by 37 CFR 1.705(b)(2) and the fee required by 37 CFR 1.18(e), the USPTO will issue a certificate of correction reflecting the PTA determination noted above.

Patentee should be aware that in order to preserve the right to review in the United States District Court for the District of Columbia of the USPTO patent term adjustment determination, patentee must ensure that he or she also take the steps required under 35 U.S.C. 154(b)(4)(A) in a timely manner. Nothing in the request for recalculation should be construed as providing an alternative time frame for commencing a civil action under 35 U.S.C. 154(b)(4)(A).

Any questions concerning this decision should be directed to the Office of Patent Legal Administration at 571-272-7702.

UNITED STATES PATENT AND TRADEMARK OFFICE

COMMISSIONER FOR PATENTS
UNITED STATES PATENT AND TRADEMARK OFFICE
P.O. BOX 1450
ALEXANDRIA, VA 22313-1450
WWW.USPTO.GOV

Paper No. None

Mr. Walter J. Tencza Jr.
Suite 3
10 Station Place
Metuchen NJ 08840

COPY MAILED

DEC 0 5 2005

OFFICE OF PETITIONS

In re Application of
Leonard Ucci et al.
Application No. 10/153,410
Filed: May 22, 2002
Title: CIGARETTE LIGHTER

DECISION GRANTING
PETITION UNDER 37 C.F.R. §1.137(b)

This is a decision on the petition filed November 8, 2005, pursuant to 37 C.F.R. §1.137(b)[1], to revive the above-identified application.

The above-identified application became abandoned for failure to reply in a timely manner to the final Office action, mailed December 24, 2003, which set a shortened statutory period for reply of three (3) months. No response was received, and no extensions of time under the provisions of 37 C.F.R. §1.136(a) were requested. Accordingly, the above-identified application became abandoned on March 25, 2004. A notice of abandonment was mailed on July 1, 2004.

With the present petition, Petitioner has filed the petition fee and the proper statement of unintentional delay. A terminal disclaimer is not required. Petitioner has also made reference to the filing of a continuation application, application number 11/269,778, filed concurrently with this petition on November 8, 2005.

As such, this petition under 37 C.F.R. §1.137(b) is **GRANTED**.

---

1 A grantable petition pursuant to 37 CFR 1.137(b) must be accompanied by:

(1) The reply required to the outstanding Office action or notice, unless previously filed;
(2) The petition fee as set forth in § 1.17(m);
(3) A statement that the entire delay in filing the required reply from the due date for the reply until the filing of a grantable petition pursuant to this paragraph was unintentional. The Commissioner may require additional information where there is a question whether the delay was unintentional, and;
(4) Any terminal disclaimer (and fee as set forth in § 1.20(d)) required pursuant to paragraph (d) of this section.

Since this application is being revived for purposes of continuity only and since continuity has been established by this decision reviving the application, the application is again abandoned in favor of continuing Application No. 11/269,778.

Paul Shanoski
Senior Attorney
Office of Petitions
United States Patent and Trademark Office

UNITED STATES PATENT AND TRADEMARK OFFICE

Commissioner for Patents
United States Patent and Trademark Office
P.O. Box 1450
Alexandria, VA 22313-1450
www.uspto.gov

LAW OFFICE OF JOHN LIGON
213 E. HIGHLAND AVENUE
P O BOX 281
ATLANTIC HIGHLANDS, NJ 07716

COPY MAILED

OCT 0 4 2006

OFFICE OF PETITIONS

In re Application of	:
D. J. Richard van Nee	:
Application No. 10/153,412	: DECISION GRANTING PETITION
Filed: May 22, 2002	: UNDER 37 CFR 1.313(c)(2)
Attorney Docket No. VAN NEE 19	:

This is a decision on the petition, filed September 28, 2006, under 37 CFR 1.313(c)(2) to withdraw the above-identified application from issue after payment of the issue fee.

The petition is **GRANTED**.

The above-identified application is withdrawn from issue for consideration of a submission under 37 CFR 1.114 (request for continued examination). See 37 CFR 1.313(c)(2).

Petitioner is advised that the issue fee paid on July 12, 2006 in the above-identified application cannot be refunded. If, however, the above-identified application is again allowed, petitioner may request that it be applied towards the issue fee required by the new Notice of Allowance.[1]

Telephone inquiries should be directed to the undersigned at (571) 272-3218.

This matter is being referred to Technology Center AU 2616 for processing of the request for continued examination under 37 CFR 1.114 and for consideration of the Information Disclosure Statement.

Frances Hicks
Petitions Examiner
Office of Petitions

C:\Documents and Settings\FHicks\My Documents\470\Oct10\153412.wpd

---

[1] *The request to apply the issue fee to the new Notice may be satisfied by completing and returning the new Part B – Fee(s) Transmittal Form (along with any balance due at the time of submission). Petitioner is advised that the Issue Fee Transmittal Form must be completed and timely submitted to avoid abandonment.*

UNITED STATES PATENT AND TRADEMARK OFFICE

Commissioner for Patents
United States Patent and Trademark Office
P.O. Box 1450
Alexandria, VA 22313-1450
www.uspto.gov

JOSEPH S. TRIPOLI
THOMSON MULTIMEDIA LICENSING INC.
2 INDEPENDENCE WAY
P.O. BOX 5312
PRINCETON, NJ 08543-5312

COPY MAILED

JUL 11 2008

OFFICE OF PETITIONS

In re Application of :
Eric Stephen Carlsgaard et al :
Application No. 10/153,456 : ON PETITION
Filed: May 22, 2002 :
Attorney Docket No. PU010116 :

This is a decision on the petition under 37 CFR 1.137(b), filed April 3, 2008, to revive the above-identified application.

The petition is **GRANTED**.

The above-identified application became abandoned for failure to reply in a timely manner to the non-final Office action mailed September 27, 2007, which set a shortened statutory period for reply of three (3) months. No extension of time under the provisions of 37 CFR 1.136(a) were obtained. Accordingly, the above-identified application became abandoned on December 28, 2007.

Telephone inquiries concerning this decision should be directed to Irvin Dingle at (571) 272-3210.

This matter is being referred to Technology Center AU 2622 for further processing.

Irvin Dingle
Petitions Examiner
Office of Petitions

UNITED STATES PATENT AND TRADEMARK OFFICE

Commissioner for Patents
United States Patent and Trademark Office
P.O. Box 1450
Alexandria, VA 22313-1450
www.uspto.gov

JUN 29 2004

Douglas H. Pauley
Pauley Petersen Kinne & Erickson
Suite 365
2800 West Higgins Road
Hoffman Estates IL 60195

In re Application of	:	
Janice M. Jenkins	:	DECISION PETITION
Serial No.: 10/153,458	:	
Filed: May 22, 2002	:	
For: Implantable Cardiac Arrest Monitor	:	
And Alarm System	:	

This is in response to applicants' petition filed May 27, 2004, to make the above-identified application special under the provisions of 37 CFR 1.102(c), based on the age of the applicant.

Applicant has satisfied the provisions set forth in M.P.E.P. 708.02, IV. Therefore the petition is **GRANTED**.

The application will be forwarded to the examiner for action on the merits commensurate with this decision.

Should there be any questions with regard to this letter please contact John Kittle by letter addressed to the Director, Technology Center 3700/2900, Washington, DC 20231, or by telephone at (703) 308-0873 or by facsimile transmission at (703) 308-3139.

John E. Kittle
Director,
Technology Center 3700/2900

UNITED STATES PATENT AND TRADEMARK OFFICE

Commissioner for Patents
United States Patent and Trademark Office
P.O. Box 1450
Alexandria, VA 22313-1450
www.uspto.gov

Paper No.

Joseph F. Hetz
BRINKS HOFER GILSON & LIONE
Suite 3600
455 N. Cityfront Plaza Dr.
Chicago, IL 60611

MAILED

JUL 0 5 2005

Technology Center 2100

In re Application of:
Edward J. Franczek
Application No. 10/153,466
Filed: May 21, 2002
For: COMPUTER VIRUS SCREENING METHODS AND SYSTEMS

DECISION ON REQUEST TO WITHDRAW AS ATTORNEY OR AGENT

This is a decision on the Request To Withdraw from Representation filed June 14, 2005.

A grantable request to withdraw as attorney of record should indicate thereon the present mailing addresses of the attorney(s) who is/are withdrawing from the record and of the applicant. The request for withdrawal must be signed by every attorney seeking to withdraw or contain a clear indication that one attorney is signing on behalf of another/others. A request to withdraw will not be approved unless at least 30 (thirty) days would remain between the date of approval and the later of the expiration date of a time to file a response or the expiration date of the maximum time period which can be extended under 37 C.F.R. э 1. 136(a). The effective date of withdrawal being the date of decision and not the date of request. See M.P.E.P. э 402.06. 37 C.F.R. э 1.36 further requires that the applicant or patent owner be notified of the withdrawal of the attorney or agent.

The request filed June 14, 2005 meets all the requirements. Accordingly the request is **GRANTED**.

All future communications from the Office will be directed to the below-listed address until otherwise notified by applicant. This correspondence address is provided by the withdrawn attorney(s). Applicant is reminded of the obligation to promptly notify the

Patent and Trademark Office (Office) of any change in correspondence address to ensure receipt of all communications from the Office.

James R. Matthews

for Vincent N. Trans
Special Program Examiner
Technology Center 2100
Computer Architecture, Software, and
Information Security
(571) 272-3613

cc: VERVE LLC
6300 Bridgepoint Parkway
Bldg. 1, Suite 410B
Austin, TX 78730

UNITED STATES PATENT AND TRADEMARK OFFICE

Commissioner for Patents
United States Patent and Trademark Office
P.O. Box 1450
Alexandria, VA 22313-1450
www.uspto.gov

HAMRE SCHUMANN MUELLER & LARSON
225 SOUTH SIXTH STREET
SUITE 2650
MINNEAPOLIS, MN 55402

COPY MAILED

APR 13 2006

OFFICE OF PETITIONS

In re Patent No. 6,955,859	:	
Issue Date: October 18, 2005	:	
Application No. 10/153,467	:	ON PETITION
Filed: May 22, 2002	:	
Attorney Docket No. 10873.944US01	:	

This is a decision on the petition under 37 CFR 3.81(b), filed January 19, 2006, to accept the addition of the second assignee on the front page of the above-identified patent by way fo a Certificate of Correction.

The petition is GRANTED.

The patent is being referred to the Certificates of Correction Branch for issuance of a Certificate of Correction to include the second assignee **Toyota Jidosha Kabushiki Kaisha, Aichi (JP).**

Telephone inquiries concerning this matter may be directed to Wan Laymon at (571) 272-3220. Any questions concerning the issuance of the Certificate of Correction should be directed to the Certificates of Correction Branch at (703) 305-8309.

Wan Laymon

Wan Laymon
Petitions Examiner
Office of Petitions

UNITED STATES PATENT AND TRADEMARK OFFICE

Commissioner for Patents
United States Patent and Trademark Office
Washington, D.C. 20231
www.uspto.gov

Paper No. 6

THOMAS R. STIEBEL, JR.
MAYER, BROWN, ROWE & MAW
P.O. BOX 2828
CHICAGO, IL 60690

COPY MAILED

MAR 21 2003

OFFICE OF PETITIONS

In re Application of
Robert E. Dudley
Application No. 10/153,468
Filed: May 21, 2002
Attorney Docket No. 02941570

: DECISION ON PETITION
: UNDER 37 CFR 1.78(a)(3)

This is a decision on the petition under 37 CFR 1.78(a)(3), filed February 20, 2003, to accept an unintentionally delayed claim under 35 U.S.C. §120 for the benefit of priority to several prior-filed nonprovisional applications.

The petition is **DISMISSED**.

A petition for acceptance of a claim for late priority under 37 CFR 1.78(a)(3) is only applicable to those applications filed on or after November 29, 2000. Further, the petition is appropriate only after the expiration of the period specified in 37 CFR 1.78(a)(2)(ii). In addition, the petition under 37 CFR 1.78(a)(3) must be accompanied by:

> **(1)** the reference required by 35 U.S.C. § 120 and 37 CFR 1.78(a)(2)(i) of the prior-filed application, unless previously submitted;[1]
> **(2)** the surcharge set forth in § 1.17(t); and
> **(3)** a statement that the entire delay between the date the claim was due under 37 CFR 1.78(a)(2)(ii) and the date the

[1] Any nonprovisional application or international application designating the United States of America claiming the benefit of one or more prior-filed copending applications or international applications designating the United States of America must contain or be amended to contain a reference (amendment to the first line of the specification following the title or in an application data sheet (ADS)) to each such prior-filed application, identifying it by application number (consisting of the series code and serial number) or international application number and international filing date filing date and indicating the relationship of the applications. Cross references to other related applications may be made when appropriate (*see* § 1.14).

claim was filed was unintentional. The Commissioner may require additional information where there is a question whether the delay was unintentional.

The petition does not comply with item(1).

The reference to the prior-filed applications was not included in the manner specified in 37 CFR 1.78(a)(2)(i) (i.e., in an ADS or in an amendment to the first sentence following the title of the specification). Petitioner is advised that the amendment / or ADS must state the relationship between the applications. Additionally, the amendment should **not** include the **Incorporate by Reference** statement.

Accordingly, before the petition under 37 CFR 1.78(a)(3) can be granted, an amendment or an ADS to include the prior-filed nonprovisional applications is required.

In order to expedite consideration, petitioner may wish to submit the substitute amendment by facsimile transmission to the number indicated below and to the attention of Karen Creasy **.**

Further correspondence with respect to this matter should be addressed as follows:

By mail: U.S. Patent and Trademark Office
P.O. Box 2327
Mailstop DAC
Arlington, VA 22202

OR

Commissioner for Patents
Box DAC
Washington, D.C. 20231

By FAX: (703) 308-6916
Attn: Office of Petitions

By hand: Crystal Plaza Four, Suite 3C23
2201 South Clark Place
Arlington, VA 22202

Any questions concerning this matter may be directed to Karen Creasy at (703) 305-8859 .

Frances Hicks
Lead Petitions Examiner
Office of Petitions
Office of the Deputy Commissioner
for Patent Examination Policy

UNITED STATES PATENT AND TRADEMARK OFFICE

COMMISSIONER FOR PATENTS
UNITED STATES PATENT AND TRADEMARK OFFICE
P.O. BOX 1450
ALEXANDRIA, VA 22313-1450
www.uspto.gov

Paper No. 10

THOMAS R. STIEBEL, JR.
MAYER, BROWN, ROWE & MAW
P.O. BOX 2828
CHICAGO IL 60690

COPY MAILED

DEC 0 9 2003

OFFICE OF PETITIONS

In re Application of
Robert E. Dudley
Application No. 10/153,468
Filed: May 21, 2002
Attorney Docket No. 02941570

DECISION ON PETITION
UNDER 37 CFR 1.78(a)(3)

This is a decision on the renewed petition under 37 CFR 1.78(a)(3), filed by facsimile transmision on May 13, 2003 and November 26, 2003, to accept an unintentionally delayed claim under 35 U.S.C. § 120 for the benefit of priority to the prior-filed nonprovisional applications set forth in the amendment filed with the instant petition on November 26, 2003.

The petition is **GRANTED**.

A petition for acceptance of a claim for late priority under 37 CFR 1.78(a)(3) is only applicable to those applications filed on or after November 29, 2000. Further, the petition is appropriate only after the expiration of the period specified in 37 CFR 1.78(a)(2)(ii). In addition, the petition under 37 CFR 1.78(a)(3) must be accompanied by:

> **(1)** the reference required by 35 U.S.C. § 120 and 37 CFR 1.78(a)(2)(i) of the prior-filed application, unless previously submitted;[1]
> **(2)** the surcharge set forth in § 1.17(t); and
> **(3)** a statement that the entire delay between the date the claim was due under 37 CFR 1.78(a)(2)(ii) and the date the claim was filed was unintentional. The Commissioner may require additional information where there is a question whether the delay was unintentional.

The instant pending application was filed on May 21, 2002, and was pending at the time of filing of the instant petition. A reference to the prior-filed nonprovisional applications

---

[1] Any nonprovisional application or international application designating the United States of America claiming the benefit of one or more prior-filed copending applications or international applications designating the United States of America must contain or be amended to contain a reference (amendment to the first line of the specification following the title or in an application data sheet (ADS) to each such prior-filed application, identifying it by application number (consisting of the series code and serial number) or international application number and international filing date filing date and indicating the relationship of the applications. Cross references to other related applications may be made when appropriate (*see* § 1.14).

has been included in an amendment to the first sentence of the specification following the title, as required by 37 CFR 1.78(a)(2)(iii).

The instant nonprovisional application was filed after November 29, 2000, and the claim herein for the benefit of priority to the prior-filed nonprovisional applications is submitted after expiration of the period specified in 37 CFR 1.78(a)(2)(ii). Also, the reference to the prior-filed nonprovisional applications was submitted during the pendency of the instant nonprovisional application, for which the claim for benefit of priority is sought. *See* 35 U.S.C. § 120. Accordingly, having found that the instant petition for acceptance of an unintentionally delayed claim for the benefit of priority under 35 U.S.C. § 120 to the prior-filed nonprovisional applications satisfies the conditions of 37 CFR 1.78(a)(3), the petition is granted.

The granting of the petition to accept the delayed benefit claim to the prior-filed applications under 37 CFR 1.78(a)(3) should not be construed as meaning that the instant application is entitled to the benefit of the prior-filed applications. In order for the instant application to be entitled to the benefit of the prior-filed applications, all other requirements under 35 U.S.C. § 120 and 37 CFR 1.78(a)(1) and (a)(2) must be met. Similarly, the fact that the corrected Filing Receipt accompanying this decision on petition includes the prior-filed applications should not be construed as meaning that applicant is entitled to the claim for benefit of priority to the prior-filed applications noted thereon. Accordingly, the examiner will, in due course, consider this benefit claim and determine whether the instant application is entitled to the benefit of the earlier filing date.

A corrected Filing Receipt, which includes the priority claim to the prior-filed nonprovisional applications, accompanies this decision on petition.

Any inquiries concerning this decision may be directed to Karen Creasy at (703) 305-8859.

This application is being forwarded to Technology Center Art Unit 1617 for consideration by the examiner of applicant's entitlement to claim benefit of priority under 35 U.S.C. § 120 to the prior-filed nonprovisional applications.

Frances Hicks

Frances Hicks
Lead Petitions Examiner
Office of Petitions
Office of the Deputy Commissioner
for Patent Examination Policy

ATTACHMENT: Corrected Filing Receipt

UNITED STATES PATENT AND TRADEMARK OFFICE

COMMISSIONER FOR PATENTS
UNITED STATES PATENT AND TRADEMARK OFFICE
P.O. BOX 1450
ALEXANDRIA, VA 22313-1450
www.uspto.gov

Paper No. 8

United States Surgical
Tyco Healthcare Group, LP
150 Glover Avenue
Norwalk, CT 06856

COPY MAILED

APR 0 7 2004

OFFICE OF PETITIONS

In re Application of Gruskin et al. :
Application No. 10/153,469 :
Filed: May 22, 2002 : ON PETITION
Attorney Docket No. 1802 CIP CON :
:

This is a decision on the petition filed March 25, 2004, which is being treated solely as a petition under 37 CFR 1.137(b), to revive the above-identified application.

The petition is Granted.

The above-identified application became abandoned for failure to reply in a timely to the Notice to File Corrected Application Papers (Notice) mailed June 20, 2002. The Notice set a period for reply of Two (2) months. No extensions of time under the provisions of 37 CFR 1.136 have been obtained. Accordingly, the application became abandoned on August 21, 2002.

While the showing of record is not sufficient to establish to the satisfaction of the Commissioner that the delay was unavoidable, the showing of record is sufficient to establish that the delay until the filing of the instant petition was unintentional.

The application file is being forwarded to the Office of Initial Patent Examination Division for further processing.

Telephone inquiries concerning this decision should be directed to Latrice Bond at (703) 308-6911.

Latrice Bond

Latrice Bond
Paralegal Specialist
Office of Petitions
Office of the Deputy Commissioner
for Patent Examination Policy

UNITED STATES PATENT AND TRADEMARK OFFICE

COMMISSIONER FOR PATENTS
UNITED STATES PATENT AND TRADEMARK OFFICE
P.O. BOX 1450
ALEXANDRIA, VA 22313-1450
www.uspto.gov

Paper No. 8

MAIL

JUN 0 3 2004

DIRECTOR OFFICE
TECHNOLOGY CENTER 2600

MARK A LAUER
6601 KOLL CENTER PARKWAY
SUITE 245
PLEASANTON, CA 94566

In re Application of
Harold Hamilton
Application No. 10/153,472
Filed: May 21, 2002
For: DURABLE, LOW-VIBRATION, DYNAMIC-CONTACT HARD DISK DRIVE SYSTEM

DECISION ON REQUEST TO WITHDRAW FROM RECORD

This is a decision on the Request for Withdrawal as Attorney or Agent and change of address filed on April 12, 2004.

A grantable request to withdraw as attorney/agent of record must:
(1) indicate the present mailing address of the attorney(s)/agent(s) who seek(s) to withdraw, and
(2) be signed by each attorney/agent seeking to withdraw or clearly be signed on their behalf, and
(3) be *approved* at least thirty (30) days prior to the maximum extendable period for response to any outstanding Office Action, and
(4) indicate the address to which future correspondence should be mailed.

Petitioner has met all of the above. Accordingly, the request is **GRANTED**.

All attorneys/agents associated with Customer Number 24501 are withdrawn.

All future communications from the Office will be directed to the below-listed address until otherwise notified by applicant. Applicant is reminded of the obligation to promptly notify the Patent and Trademark Office of any change in correspondence address to ensure receipt of all communications from the Office.

Kenneth A. Wieder
Special Program Examiner
Technology Center 2600
Communications
(703) 305-4710

Cc: Sabine Austin
President, Censtor Corporation
540 N. Santa Cruz, Suite 277
Los Gatos, CA 95030

UNITED STATES PATENT AND TRADEMARK OFFICE

Commissioner for Patents
United States Patent and Trademark Office
P.O. Box 1450
Alexandria, VA 22313-1450
www.uspto.gov

MCDONNELL BOEHNEN HULBERT & BERGHOFF LLP
300 S. WACKER DRIVE
32ND FLOOR
CHICAGO IL 60606

COPY MAILED
MAY 0 5 2008
OFFICE OF PETITIONS

In re Patent No. 7147687	:	
Issue Date: 12/12/2006	:	
Application No. 10/153483	:	ON PETITION
Filed: 05/22/2002	:	
Attorney Docket No. 01-661-C	:	

This is a decision on the petition filed on December 22, 2006, which is being treated as a request under 37 CFR 3.81(b)[1] to correct the name of the assignee on the front page of the above-identified patent by way of a Certificate of Correction.

The request is **GRANTED**.

Telephone inquiries concerning this decision may be directed to the undersigned at (571) 272-3231. Inquiries regarding the issuance of a certificate of correction should be directed to the Certificate of Correction Branch at (571) 272-4200.

The Certificates of Correction Branch will be notified of this decision granting the petition under 37 CFR 3.81(b) and directing issuance of the requested Certificate of Correction.

DWood
Douglas I. Wood
Senior Attorney
Office of Petitions

[1] *See* MPEP 1309, subsection II; and Official Gazette of June 22, 2004.

UNITED STATES PATENT AND TRADEMARK OFFICE

Commissioner for Patents
United States Patent and Trademark Office
P.O. Box 1450
Alexandria, VA 22313-1450
www.uspto.gov

HENSLEY KIM & HOLZER, LLC
1660 LINCOLN STREET
SUITE 3000
DENVER CO 80264

COPY MAILED

JUL 19 2007

OFFICE OF PETITIONS

In re Application of	:	
Pelissier et al.	:	
Application No. 10/153512	:	ON PETITION
Filing Date: 05/22/2002	:	
Attorney Docket Number:	:	
233-594-USP	:	

This is a decision on the petition under the unintentional provisions of 37 CFR 1.137(b), filed May 24, 2007, to revive the above-identified application.

The petition is **GRANTED**.

The application became abandoned for failure to timely file a reply within the meaning of 37 CFR 1.113 to the final Office action of October 18, 2006. The proposed reply required for consideration of a petition to revive must be a Notice of Appeal (and appeal fee required by 37 CFR 41.20(b)(2), an amendment that *prima facie* places the application in condition for allowance, a Request for Continued Examination and submission (37 CFR 1.114), or the filing of a continuing application under 37 CFR 1.53(b). See MPEP 711.03(c)(III)(A)(2). No extensions of time pursuant to the provisions of 37 CFR 1.136(a) were obtained. Accordingly, the date of abandonment of this application is January 19, 2007.

The petition satisfies the requirements of 37 CFR 1.137(b) in that petitioner has supplied (1) the reply in the form of a Request for Continued Examination (RCE) and fee, and the submission required by 37 CFR 1.114 (filed December 18, 2006); (2) the petition fee; and (3) a proper statement of unintentional delay.

Telephone inquiries concerning this decision should be directed to the undersigned at (571) 272-3232.

This application is being referred to Technology Center AU 2616 for processing of the RCE and for appropriate action by the Examiner in the normal course of business on the amendment submitted in accordance with 37 CFR 1.114.

Derek L. Woods
Attorney
Office of Petitions

UNITED STATES PATENT AND TRADEMARK OFFICE

Commissioner for Patents
United States Patent and Trademark Office
P.O. Box 1450
Alexandria, VA 22313-1450
www.uspto.gov

INTEL/BSTZ
BLAKELY SOKOLOFF TAYLOR & ZAFMAN LLP
1279 OAKMEAD PARKWAY
SUNNYVALE CA 94085-4040

MAILED

FEB 0 4 2010

OFFICE OF PETITIONS

In re Patent No. 6,738,020	:	
Issue Date: May 18, 2004	:	
Application No. 10/153,515	:	DECISION ON PETITION
Filed: May 21, 2002	:	
Attorney Docket No. 42P28145	:	

This is a decision on the petition under 37 CFR 1.378(c), filed July 28, 2008 to accept the unintentionally delayed payment of a maintenance fee for the above-identified patent.

The petition is **GRANTED**.

This patent expired on May 19, 2008 for failure to pay the three and one-half year maintenance fee. Since this petition was submitted within twenty-four months after the six-month grace period provided in 37 CFR 1.362(e), the petition was timely filed under the provisions of 37 CFR 1.378(c).

The maintenance fee is hereby accepted and the above-identified patent is reinstated as of the mail date of this decision.

Telephone inquiries concerning this decision should be directed to the undersigned at (571) 272-7751.

Joan Olszewski
Petitions Examiner
Office of Petitions

UNITED STATES PATENT AND TRADEMARK OFFICE

Commissioner for Patents
United States Patent and Trademark Office
P.O. Box 1450
Alexandria, VA 22313-1450
www.uspto.gov

ALICE A. BREWER
BAYER HEALTHCARE LLC
P.O. BOX 40
ELKHART, IN 46515-0040

COPY MAILED

DEC 0 2 2004

OFFICE OF PETITIONS

In re Application of	:	
Steven C. Charlton	:	
Application No. 10/153,518	:	ON PETITION
Filed: May 24, 2002	:	
Attorney Docket No. MSE #2622	:	

This is a decision on the petition under 37 CFR 1.137(b), filed October 6, 2004, to revive the above-identified application.

The petition is **dimissed**.

Any request for reconsideration of this decision must be submitted within TWO (2) MONTHS from the mail date of this decision. Extensions of time under 37 CFR 1.136(a) are permitted. The reconsideration request should include a cover letter entitled "Renewed Petition under 37 CFR 1.137(b)."

This application became abandoned for failure to timely pay the issue fee and publication fee, on or before August 19, 2004. Accordingly, this application became abandoned on August 20, 2004. A Notice of Abandonment was mailed on September 24, 2004.

Effective December 1, 1997, the provisions of 37 CFR 1.137(b) now provide that where the delay in reply was unintentional, a petition may be filed to revive an abandoned application pursuant to 37 CFR 1.137(b). A grantable petition pursuant to 37 CFR 1.137(b) must be accompanied by:

> (1) the required reply, unless previously filed. In a nonprovisional application abandoned for failure to prosecute, the required reply may be met by the filing of a continuing application. In an application, abandoned or lapsed for failure to pay the issue fee or any portion thereof, the required

reply must be the payment of the issue fee or any outstanding balance thereof.

(2) the petition fee as set forth in 37 CFR 1.17(m);

(3) a statement that the **entire** delay in filing the required reply from the due date for the reply until the filing of a grantable petition pursuant to 37 CFR 1.137(b) was unintentional. The Commissioner may require additional information where there is a question whether the delay was unintentional; and

(4) any terminal disclaimer (and fee set forth in 37 CFR 1.20(d)) required pursuant to 37 CFR 1.137(d).

The instant petition does not satisfy requirements (1) and (2), above.

As to item (1), the required reply has not been submitted. Deposit account no. 13-3375 had insufficient funds when the attempt was made to charge the issue and publication fees.

As to item (2), the petition fee has not been submitted. Deposit account no. 13-3375 had insufficient funds when the attempt was made to charge the necessary petition fee.

As such, the petition must be dismissed.

Further correspondence with respect to this matter should be addressed as follows:

By mail: Mail Stop Petition
Commissioner for Patents
Box 1450
Alexandria, VA 22313

By FAX: (703) 872-9306
Attn: Office of Petitions

By hand: Customer Service Window
2011 South Clark Place
Crystal Plaza Two (left side entrance of building)
Arlington, VA

Telephone inquiries concerning this matter may be directed to the undersigned at (571)272-3228.

Edward J. Tannouse
Petitions Attorney
Office of Petitions
United States Patent and Trademark Office

UNITED STATES PATENT AND TRADEMARK OFFICE

Commissioner for Patents
United States Patent and Trademark Office
P.O. Box 1450
Alexandria, VA 22313-1450
www.uspto.gov

ALICE A. BREWER
BAYER HEALTHCARE LLC
P.O. BOX 40
ELKHART, IN 46515-0040

COPY MAILED

JUN 06 2005

OFFICE OF PETITIONS

In re Application of	:	
Steven C. Charlton	:	
Application No. 10/153,518	:	ON PETITION
Filed: May 24, 2002	:	
Attorney Docket No. MSE #2622	:	

This is a decision on the renewed petition under 37 CFR 1.137(b), filed May 19, 2005, to revive the above-identified application.

The petition is **GRANTED**.

This application became abandoned for failure to timely pay the issue fee and publication fee, on or before August 19, 2004. Accordingly, this application became abandoned on August 20, 2004. A Notice of Abandonment was mailed on September 24, 2004.

This application is being forwarded to Publishing Division for processing into a patent.

Telephone inquiries concerning this matter may be directed to the undersigned at (571)272-3228.

Edward J. Tannouse
Petitions Attorney
Office of Petitions
United States Patent and Trademark Office

UNITED STATES PATENT AND TRADEMARK OFFICE

Commissioner for Patents
United States Patent and Trademark Office
P.O. Box 1450
Alexandria, VA 22313-1450
www.uspto.gov

WOODCOCK WASHBURN LLP
ONE LIBERTY PLACE - 46TH FLOOR
PHILADELPHIA PA 19103

COPY MAILED
MAY 0 5 2006
OFFICE OF PETITIONS

In re Application of	:	
Dunham et al.	:	DECISION ON PETITION
Application No. 10/153,529	:	TO WITHDRAW
Filed: May 22, 2002	:	FROM RECORD
Attorney Docket No. BELL-0154/99105	:	

This is a decision on the Request to Withdraw as attorney or agent of record under 37 C.F.R. § 1.36(b), filed September 2, 2005.

The request is **NOT APPROVED** as moot.

A review of the file record indicates that the power of attorney to the attorneys associated with Customer Number 23377 has been revoked by the assignee of the entire interest of the patent application. Accordingly, the request to withdraw under 37 C.F.R. § 1.36(b) is moot.

All future communications from the Office will continue to be directed to the below-listed address until otherwise notified by applicant.

Telephone inquires concerning this decision should be directed to Petitions Examiner Liana Chase at 571-272- 3206.

David Bucci
Petitions Examiner
Office of Petitions

cc: POTOMAC PATENT GROUP, PLLC
P.O. BOX 270
FREDERICKSBURG VA 22404

UNITED STATES PATENT AND TRADEMARK OFFICE

Commissioner for Patents
United States Patent and Trademark Office
P.O. Box 1450
Alexandria, VA 22313-1450
www.uspto.gov

KENYON & KENYON
ONE BROADWAY
NEW YORK, N.Y. 10004

COPY MAILED

MAR 3 1 2005

OFFICE OF PETITIONS

In re Application of :
Bernhard Mattes et al :
Application No. 10/153,539 : ON PETITION
Filed: May 22, 2002 :
Attorney Docket No. 10191/2436

This is a decision on the petition, filed March 8, 2005, under 37 CFR 1.313(c)(3) to withdraw the above-identified application from issue after payment of the issue fee.

The petition is **GRANTED**.

The above-identified application is withdrawn from issue for express abandonment. See 37 CFR 1.313(c)(3).

The application is hereby withdrawn from issue, and the abandonment is hereby recognized.

Telephone inquiries should be directed to Irvin Dingle at (571) 272-3210.

Irvin Dingle
Petitions Examiner
Office of Petitions
Office of the Deputy Commissioner
for Patent Examination Policy

UNITED STATES PATENT AND TRADEMARK OFFICE

COMMISSIONER FOR PATENTS
UNITED STATES PATENT AND TRADEMARK OFFICE
WASHINGTON, D.C. 20231
www.uspto.gov

Paper No. 6

MARKS & CLERK
350 BURNHAMTHORPE ROAD WEST
SUITE 402
MISSISSAUGA, ON L5B 3J1
CANADA

COPY MAILED

MAR 03 2003

OFFICE OF PETITIONS

In re Application of :
Andrew M. Fussell et al :
Application No. 10/153,666 : ON PETITION
Filed: May 24, 2002 :
Attorney Docket No. 6314-05/DEH :

This is a decision on the petition under 37 CFR 1.137(b), filed February 19, 2003, to revive the above-identified application.

The petition is **GRANTED**.

The above-identified application became abandoned for failure to reply in a timely manner to the Notice to File Corrected Application Papers (Notice) mailed July 15, 2002. The Notice set a period for reply of two (2) months from the mail date of the Notice. No extensions of time under the provisions of 37 CFR 1.136(a) were obtained. Accordingly, the above-identified application became abandoned on September 16, 2002.

37 CFR 1.137(b)(3) requires a statement that the entire delay in filing the required reply from the due date for the reply until the filing of a grantable petition pursuant to 37 CFR 1.137(b) was unintentional. If the statement contained in the instant petition varies from the language required by 37 CFR 1.137(b)(3), the statement contained in the instant petition is being construed as the statement required by 37 CFR 1.137(b)(3) and petitioner must notify the Office if this is **not** a correct interpretation of the statement contained in the instant petition.

Telephone inquiries concerning this decision should be directed to Wan Laymon at (703) 305-9282.

The application file is being forwarded to the Office of Initial Patent Examination.

Wan Laymon
Petitions Examiner
Office of Petitions
Office of the Deputy Commissioner
for Patent Examination Policy

Under the Paperwork Reduction Act of 1995, no persons are required to respond to a collection of information unless it displays valid OMB control number.

PETITION TO ACCEPT UNINTENTIONALLY DELAYED PAYMENT OF MAINTENANCE FEE IN AN EXPIRED PATENT (37 CFR 1.378(c))

Patent Number	Issue Date (YYYY-MM-DD)	Application Number	Filing Date (YYYY-MM-DD)	Docket Number (if applicable)
6,646,849	2003-11-11	10153670	2002-05-24	3214-6849

CAUTION: Maintenance fee (and surcharge, if any) payment must correctly identify: (1) the patent number and (2) the application number of the actual U.S. application leading to issuance of that patent to ensure the fee(s) is/are associated with the correct patent. 37 CFR 1.366(c) and (d).

SMALL ENTITY
☒ Patentee claims, or has previously claimed, small entity status. See 37 CFR 1.27.

LOSS OF ENTITLEMENT TO SMALL ENTITY STATUS
☐ Patentee is no longer entitled to small entity status. See 37 CFR 1.27(g)

NOT Small Entity		Small Entity	
Fee	Code	Fee	Code
○ 3 ½ year	(1551)	◉ 3 ½ year	(2551)
○ 7 ½ year	(1552)	○ 7 ½ year	(2552)
○ 11 ½ year	(1553)	○ 11 ½ year	(2553)

SURCHARGE
The surcharge required by 37 CFR 1.20(i)(2) (Fee Code 1558) must be paid as a condition of accepting unintentionally delayed payment of the maintenance fee.

MAINTENANCE FEE (37 CFR 1.20(e)-(g))
The appropriate maintenance fee must be submitted with this petition.

STATEMENT
THE UNDERSIGNED CERTIFIES THAT THE DELAY IN PAYMENT OF THE MAINTENANCE FEE TO THIS PATENT WAS UNINTENTIONAL

PETITIONER(S) REQUEST THAT THE DELAYED PAYMENT OF THE MAINTENANCE FEE BE ACCEPTED AND THE PATENT REINSTATED

THIS PORTION MUST BE COMPLETED BY THE SIGNATORY OR SIGNATORIES

37 CFR 1.378(d) states: "Any petition under this section must be signed by an attorney or agent registered to practice before the Patent and Trademark Office, or by the patentee, the assignee, or other party in interest."

I certify, in accordance with 37 CFR 1.4(d)(4) that I am

◉ An attorney or agent registered to practice before the Patent and Trademark Office

○ A sole patentee

○ A joint patentee; I certify that I am authorized to sign this submission on behalf of all the other patentees.

○ A joint patentee; all of whom are signing this e-petition

○ The assignee of record of the entire interest

Patent Practitioner			
A signature of the applicant or representative is required in accordance with 37 CFR 1.33 and 10.18. Please see 37 CFR 1.4(d) for the form of the signature			
Signature	/Bruce H. Troxell/	Date (YYYY-MM-DD)	2008-03-04
Name	Bruce H. Troxell	Registration Number	26592

This collection of information is required by 37 CFR 1.378(c). The information is required to obtain or retain a benefit by the public which is to file (and by the USPTO to process) an application. Confidentiality is governed by 35 U.S.C. 122 and 37 CFR 1.11 and 1.14. This collection is estimated to take 1 hour to complete, including gathering, preparing, and submitting the completed application form to the USPTO. Time will vary depending upon the individual case. Any comments on the amount of time you require to complete this form and/ or suggestions for reducing this burden, should be sent to the Chief Information Officer, U.S. Patent and Trademark Office, U.S. Department of Commerce, P.O. Box 1450, Alexandria, VA 22313-1450. DO NOT SEND FEES OR COMPLETED FORMS TO THIS ADDRESS. **This form can only be used when in conjunction with EFS-Web. If this form is mailed to the USPTO, it may cause delays in reinstating the patent.**

Privacy Act Statement

The Privacy Act of 1974 (P.L. 93-579) requires that you be given certain information in connection with your submission of the attached form related to a patent application or patent. Accordingly, pursuant to the requirements of the Act, please be advised that: (1) the general authority for the collection of this information is 35 U.S.C. 2(b)(2); (2) furnishing of the information solicited is voluntary; and (3) the principal purpose for which the information is used by the U.S. Patent and Trademark Office is to process and/or examine your submission related to a patent application or patent. If you do not furnish the requested information, the U.S. Patent and Trademark Office may not be able to process and/or examine your submission, which may result in termination of proceedings or abandonment of the application or expiration of the patent.

The information provided by you in this form will be subject to the following routine uses:

1. The information on this form will be treated confidentially to the extent allowed under the Freedom of Information Act (5 U.S.C. 552) and the Privacy Act (5 U.S.C. 552a). Records from this system of records may be disclosed to the Department of Justice to determine whether the Freedom of Information Act requires disclosure of these record s.

2. A record from this system of records may be disclosed, as a routine use, in the course of presenting evidence to a court, magistrate, or administrative tribunal, including disclosures to opposing counsel in the course of settlement negotiations.

3. A record in this system of records may be disclosed, as a routine use, to a Member of Congress submitting a request involving an individual, to whom the record pertains, when the individual has requested assistance from the Member with respect to the subject matter of the record.

4. A record in this system of records may be disclosed, as a routine use, to a contractor of the Agency having need for the information in order to perform a contract. Recipients of information shall be required to comply with the requirements of the Privacy Act of 1974, as amended, pursuant to 5 U.S.C. 552a(m).

5. A record related to an International Application filed under the Patent Cooperation Treaty in this system of records may be disclosed, as a routine use, to the International Bureau of the World Intellectual Property Organization, pursuant to the Patent Cooperation Treaty.

6. A record in this system of records may be disclosed, as a routine use, to another federal agency for purposes of National Security review (35 U.S.C. 181) and for review pursuant to the Atomic Energy Act (42 U.S.C. 218(c)).

7. A record from this system of records may be disclosed, as a routine use, to the Administrator, General Services, or his/her designee, during an inspection of records conducted by GSA as part of that agency's responsibility to recommend improvements in records management practices and programs, under authority of 44 U.S.C. 2904 and 2906. Such disclosure shall be made in accordance with the GSA regulations governing inspection of records for this purpose, and any other relevant (i.e., GSA or Commerce) directive. Such disclosure shall not be used to make determinations about individuals.

8. A record from this system of records may be disclosed, as a routine use, to the public after either publication of the application pursuant to 35 U.S.C. 122(b) or issuance of a patent pursuant to 35 U.S.C. 151. Further, a record may be disclosed, subject to the limitations of 37 CFR 1.14, as a routine use, to the public if the record was filed in an application which became abandoned or in which the proceedings were terminated and which application is referenced by either a published application, an application open to public inspections or an issued patent.

9. A record from this system of records may be disclosed, as a routine use, to a Federal, State, or local law enforcement agency, if the USPTO becomes aware of a violation or potential violation of law or regulation.

UNITED STATES PATENT AND TRADEMARK OFFICE

Commissioner for Patents
United States Patent and Trademark Office
P.O. Box 1450
Alexandria, VA 22313-1450
www.uspto.gov

In re Patent No. 6646849
Issue Date: November 11,2003
Application No. 10153670
Filed: May 24,2002
Attorney Docket No. BHT-3214-20

:DECISION GRANTING PETITION
:UNDER 37 CFR 1.378(c)

This is a decision on the electronic petition, filed March 4,2008 ,under 37 CFR 1.378(c) to accept the unintentionally delayed payment of the 3.5 year maintenance fee for the above-identified patent.

The petition is GRANTED.

The maintenance fee is accepted, and the above-identified patent reinstated as of March 4,2008 . This decision also constitutes notice that the fee has been accepted. An electronic copy of the petition and this decision has been created as an entry in an Image File Wrapper. Nevertheless, petitioner should print and retain an independent copy

Telephone inquires related to this electronic decision should be directed to the Electronic Business Center at 1-866-217-9197.

SPE RESPONSE FOR CERTIFICATE OF CORRECTION

DATE : 10/2/06

Paper No.: ____

TO SPE OF : ART UNIT 3729

SUBJECT : Request for Certificate of Correction for Appl. No.: 10/153623 Patent No.: 6938335 B2

Please respond to this request for a certificate of correction within 7 days.

Please review the requested changes/corrections as shown in the **COCIN** document(s) in the IFW application image. No new matter should be introduced, nor should the scope or meaning of the claims be changed.

Please complete the response (see below) and forward the completed response to scanning using document code **COCX**.

Virginia Tolbert
Certificates of Correction Branch

703-308-9390 ext. 113

Thank You For Your Assistance

The request for issuing the above-identified correction(s) is hereby:
Note your decision on the appropriate box.

- ☐ **Approved** — **All** changes apply.
- ☒ **Approved in Part** — Specify below which changes **do not** apply.
- ☐ **Denied** — State the reasons for denial below.

Comments: The changes to item (63) on the front page and the specification are approved. The changes to item (56) Reference Cited are denied because the date of the proposed changes is incorrect.

SPE — 3729 Art Unit

SUPERVISORY PATENT EXAMINER
TECHNOLOGY CENTER 3700

UNITED STATES PATENT AND TRADEMARK OFFICE

COMMISSIONER FOR PATENTS
UNITED STATES PATENT AND TRADEMARK OFFICE
P.O. BOX 1450
ALEXANDRIA, VA 22313-1450
www.uspto.gov

VENABLE LLP
P.O. BOX 34385
WASHINGTON, DC 20043-9998

COPY MAILED

JUL 2 2 2008

OFFICE OF PETITIONS

In re Patent No. 7,060,202	:	
Issue Date: June 13, 2006	:	
Application No. 10/153,731	:	DECISION ON PETITION
Filed: May 24, 2002	:	
Attorney Docket No. 33419-181247	:	

This is a decision on the petition under 37 CFR 1.182, filed March 19, 2008, requesting issuance of a duplicate Letters Patent for the above-identified patent.

The petition is **GRANTED**.

The Office of Data Management is directed to issue a duplicate Letters Patent.

Telephone inquiries concerning this decision may be directed to Sherry D. Brinkley at (571) 272-3204. Inquiries regarding the issuance of a duplicate Letters Patent may be directed to Niomi Farmer in the Office of Data Management at (703) 308-9250, Ext. 129.

A copy of this decision is being faxed to Office of Data Management for issuance of a duplicate Letters Patent.

Sherry D. Brinkley
Petitions Examiner
Office of Petitions

cc: Niomi Farmer, South Tower, 8th Floor, Room C23 (Fax No. (571) 270-9753)

UNITED STATES PATENT AND TRADEMARK OFFICE

Commissioner for Patents
United States Patent and Trademark Office
P.O. Box 1450
Alexandria, VA 22313-1450
www.uspto.gov

JJGJR.: 09-07

Paper No: __

COPY MAILED

OCT 01 2007

OFFICE OF PETITIONS

MYERS BIGEL SIBLEY
& SAJOVEC
PO BOX 37428
RALEIGH NC 27627

In re Application of	:	
Chilkoti	:	DECISION
Application No.: 10/153,747	:	
Filing Date: 22 May, 2002	:	
Attorney Docket No. 9632-2291PDV2	:	

This is a decision on the petition filed on 8 May, 2007, supplemented with a reply on 30 May, 2007, and considered as a request to withdraw the holding of abandonment under 37 C.F.R. §1.181.

The Office regrets the delay in addressing this matter, however, the instant petition was presented to the attorneys in the Office of Petitions only at this writing.[1]

The petition as considered under 37 C.F.R. §1.181 is **GRANTED**.

BACKGROUND

The record reflects that:

- Petitioner failed to reply timely and properly to final Office action mailed on 5 July, 2006,

[1] **NOTE: Monitoring of the status of applications on PAIR can inform one's management of application responses and provide an indication when mailings of Office actions should be expected. Status Inquiries filed at three (3) or four (4) month intervals provide a demonstration of diligence and attention in supporting a petition seeking relief under 37 C.F.R. §1.181.**

with reply due absent extension of time on or before 5 October, 2006;

- the application went abandoned by operation of law after midnight 5 October, 2006;
- the Office mailed a Notice of Abandonment on 20 March, 2007;
- on8 May, 2007, Petitioner filed the instant petition with, *inter alia*, an averment that he filed on 5 January, 2007, a Notice of Appeal and fee with request and fee for extension of time (all evidenced in the record); and
- on 30 May, 2007, Petitioner filed a reply to the Office action in question in the form of a request for continued examination (RCE) and fee and an amendment as the submission under 37 C.F.R. §1.114, along with a request and fee for extension of time to make timely the filing–and again, all these matters are evidenced in the record.

Notably, the availability of applications and application papers online to applicants/practitioners who diligently associate their Customer Number with the respective application(s) now provides an applicant/practitioner immediate and on-demand information as to events/transactions in an application. Thus, now if one wishes to know the progress in and/or status of an application or the accuracy of the data therein, one need only look at the file online.

Out of an abundance of caution, Petitioners always are reminded that the filing of a petition under 37 C.F.R. §1.181 does not toll any periods that may be running as to any action by the Office and a petition seeking relief under the regulation must be filed within two (2) months of the act complained of (see: 37 C.F.R. §1.181(f)); and those registered to practice *and* all others who make representations before the Office must inquire into the underlying facts of representations made to the Office and support averments with the appropriate documentation–since all owe to the Office the continuing duty to disclose.[2]

---

[2] See supplement of 17 June, 1999. The Patent and Trademark Office is relying on petitioner's duty of candor and good faith and accepting a statement made by Petitioner. See Changes to Patent Practice and Procedure, 62 Fed. Reg. at 53160 and 53178, 1203 Off. Gaz. Pat. Office at 88 and 103 (responses to comments 64 and 109)(applicant obligated under 37 C.F.R. §10.18 to inquire into the underlying facts and circumstances when providing statements to the Patent and Trademark Office).

Specifically, the regulations at 37 C.F.R. §10.18 provide:

§ 10.18 Signature and certificate for correspondence filed in the Patent and Trademark Office.
(a) For all documents filed in the Office in patent, trademark, and other non-patent matters, except for correspondence that is required to be signed by the applicant or party, each piece of correspondence filed by a practitioner in the Patent and Trademark Office must bear a signature by such practitioner complying with the provisions of §1.4(d), §1.4(e), or § 2.193(c)(1) of this chapter.
(b) By presenting to the Office (whether by signing, filing, submitting, or later advocating) any paper, the party presenting such paper, whether a practitioner or non-practitioner, is certifying that—

(1) All statements made therein of the party's own knowledge are true, all statements made therein on information and belief are believed to be true, and all statements made therein are made with the knowledge that whoever, in any matter within the jurisdiction of the Patent and Trademark Office, knowingly and willfully falsifies, conceals, or covers up by any trick, scheme, or device a material fact, or makes any false, fictitious or fraudulent statements or representations, or makes or uses any false writing or document knowing the same to contain any false, fictitious or fraudulent statement or entry, shall be subject to the penalties set forth under 18 U.S.C. 1001, and that violations of this

STATUTES, REGULATIONS AND ANALYSIS

Congress has authorized the Commissioner to "revive an application if the delay is shown to the satisfaction of the Commissioner to have been "unavoidable." 35 U.S.C. §133 (1994).[3]

The regulations at 37 C.F.R. §1.137(a) and (b) set forth the requirements for a petitioner to revive a previously unavoidably or unintentionally, respectively, abandoned application under this congressional grant of authority. The language of 35 U.S.C. §133 and 37 C.F.R. §1.137(a) is clear, unambiguous, and without qualification: the delay in tendering the reply to the outstanding Office action, as well as filing the first petition seeking revival, must have been unavoidable for the reply now to be accepted on petition.[4]

Delays in responding properly raise the question whether delays are unavoidable.[5] Where there is a question whether the delay was unavoidable, Petitioners must meet the burden of establishing

---

paragraph may jeopardize the validity of the application or document, or the validity or enforceability of any patent, trademark registration, or certificate resulting therefrom; and

(2) To the best of the party's knowledge, information and belief, formed after an inquiry reasonable under the circumstances, that —

(i) The paper is not being presented for any improper purpose, such as to harass someone or to cause unnecessary delay or needless increase in the cost of prosecution before the Office;

(ii) The claims and other legal contentions therein are warranted by existing law or by a nonfrivolous argument for the extension, modification, or reversal of existing law or the establishment of new law;

(iii) The allegations and other factual contentions have evidentiary support or, if specifically so identified, are likely to have evidentiary support after a reasonable opportunity for further investigation or discovery; and

(iv) The denials of factual contentions are warranted on the evidence, or if specifically so identified, are reasonably based on a lack of information or belief.

(c) Violations of paragraph (b)(1) of this section by a practitioner or non-practitioner may jeopardize the validity of the application or document, or the validity or enforceability of any patent, trademark registration, or certificate resulting therefrom. Violations of any of paragraphs (b)(2)(i) through (iv) of this section are, after notice and reasonable opportunity to respond, subject to such sanctions as deemed appropriate by the Commissioner, or the Commissioner's designee, which may include, but are not limited to, any combination of —

(1) Holding certain facts to have been established;

(2) Returning papers;

(3) Precluding a party from filing a paper, or presenting or contesting an issue;

(4) Imposing a monetary sanction;

(5) Requiring a terminal disclaimer for the period of the delay; or

(6) Terminating the proceedings in the Patent and Trademark Office.

(d) Any practitioner violating the provisions of this section may also be subject to disciplinary action. See § 10.23(c)(15).

[Added 50 FR 5175, Feb. 6, 1985, effective Mar. 8, 1985; para. (a) revised, 58 FR 54494, Oct. 22, 1993, effective Nov. 22, 1993; paras. (a) & (b) revised, paras. (c) & (d) added, 62 FR 53131, Oct. 10, 1997, effective Dec. 1, 1997; para. (a) revised, 69 FR 56481, Sept. 21, 2004, effective Oct. 21, 2004]

[3] 35 U.S.C. §133 provides:

35 U.S.C. §133 Time for prosecuting application.

Upon failure of the applicant to prosecute the application within six months after any action therein, of which notice has been given or mailed to the applicant, or within such shorter time, not less than thirty days, as fixed by the Commissioner in such action, the application shall be regarded as abandoned by the parties thereto, unless it be shown to the satisfaction of the Commissioner that such delay was unavoidable.

[4] Therefore, by example, an unavoidable delay in the payment of the Filing Fee might occur if a reply is shipped by the US Postal Service, but due to catastrophic accident, the delivery is not made.

[5] See: *Changes to Patent Practice and Procedure*; *Final Rule Notice*, 62 *Fed. Reg.* at 53158-59 (October 10, 1997), 1203 *Off. Gaz. Pat. Office* at 86-87 (October 21, 1997).

that the delay was unavoidable within the meaning of 35 U.S.C. §133 and 37 C.F.R. §1.137(a).[6]

And the Petitioner must be diligent in attending to the matter.[7] Failure to do so does not constitute the care required under Pratt, and so cannot satisfy the test for diligence and due care.

(By contrast, unintentional delays are those that do not satisfy the very strict statutory and regulatory requirements of unavoidable delay, and also, by definition, are not intentional.[8]))

Allegations as to the Request to
Withdraw the Holding of Abandonment

The courts have determined the construct for properly supporting a petition seeking withdrawal of a holding of abandonment.[9]

The commentary at MPEP §711.03(c) provides:

* * *

> **B. Petition To Withdraw Holding of Abandonment Based on Evidence That a Reply Was Timely Mailed or Filed**
>
> 37 C.F.R. §1.10(c) through §1.10(e) and §1.10(g) set forth procedures for petitioning the Director of the USPTO to accord a filing date to correspondence as of the date of deposit of the correspondence as "Express Mail." A petition to withdraw the holding of abandonment relying upon a timely reply placed in "Express Mail" must include an appropriate petition under 37 C.F.R. §1.10(c), (d), * (e), or (g) (see MPEP § 513). When a paper is shown to have been mailed to the Office using the "Express Mail" procedures, the paper must be entered in PALM with the "Express Mail" date.

---

[6] See: In re Application of G, 11 USPQ2d 1378, 1380 (Comm'r Pats. 1989).

[7] See: Diligence in Filing Petitions to Revive and Petitions to Withdraw the Holding of Abandonment, 1124 Off. Gaz. Pat. Office 33 (March 19, 1991). It was and is Petitioner's burden to exercise diligence in seeking either to have the holding of abandonment withdrawn or the application revived. See 1124 Off. Gaz. Pat. Office supra.

[8] Therefore, by example, an unintentional delay in the reply might occur if the reply and transmittal form are to be prepared for shipment by the US Postal Service, but other pressing matters distract one's attention and the mail is not timely deposited for shipment.

[9] See: Delgar v. Schulyer, 172 USPQ 513 (D.D.C. 1971).

Similarly, applicants may establish that a reply was filed with a postcard receipt that properly identifies the reply and provides *prima facie* evidence that the reply was timely filed. See MPEP § 503. For example, if the application has been held abandoned for failure to file a reply to a first Office action, and applicant has a postcard receipt showing that an amendment was timely filed in response to the Office action, then the holding of abandonment should be withdrawn upon the filing of a petition to withdraw the holding of abandonment. When the reply is shown to have been timely filed based on a postcard receipt, the reply must be entered into PALM using the date of receipt of the reply as shown on the post card receipt.

Where a certificate of mailing under 37 C.F.R. §1.8, but not a postcard receipt, is relied upon in a petition to withdraw the holding of abandonment, see 37 C.F.R. §1.8(b) and MPEP § 512. As stated in 37 C.F.R §1.8(b)(3) the statement that attests to the previous timely mailing or transmission of the correspondence must be on a personal knowledge basis, or to the satisfaction of the Director of the USPTO. If the statement attesting to the previous timely mailing is not made by the person who signed the Certificate of Mailing (i.e., there is no personal knowledge basis), then the statement attesting to the previous timely mailing should include evidence that supports the conclusion that the correspondence was actually mailed (e.g., copies of a mailing log establishing that correspondence was mailed for that application). When the correspondence is shown to have been timely filed based on a certificate of mailing, the correspondence is entered into PALM with the actual date of receipt (i.e., the date that the duplicate copy of the papers was filed with the statement under 37 C.F.R. §1.8).

37 C.F.R. §1.8(b) also permits applicant to notify the Office of a previous mailing or transmission of correspondence and submit a statement under 37 C.F.R. 1.8(b)(3) accompanied by a duplicate copy of the correspondence when a reasonable amount of time (e.g., more than one month) has elapsed from the time of mailing or transmitting of the correspondence. Applicant does not have to wait until the application becomes abandoned before notifying the Office of the previous mailing or transmission of the correspondence. Applicant should check the private Patent Application Information Retrieval (PAIR) system for the status of

the correspondence before notifying the Office. See MPEP § 512.

* * *

Moreover, the regulation places upon Petitioner a diligence requirement to seek relief within two (2) months of the act complained of.

It appears that Petitioner has satisfied the showing as discussed above.

CONCLUSION

The petition as considered under 37 C.F.R. §1.181 is **granted**, and the 20 March, 2007, Notice of Abandonment is **vacated**.

The instant application is released to Technology Center 1600 for further processing in due course.

While telephone inquiries regarding this decision may be directed to the undersigned at (571) 272-3214, it is noted that all practice before the Office is in writing (see: 37 C.F.R. §1.2[10]) and the proper authority for action on any matter in this regard are the statutes (35 U.S.C.), regulations (37 C.F.R.) and the commentary on policy (MPEP). Therefore, no telephone discussion may be controlling or considered authority for Petitioner's action(s).

John J. Gillon, Jr.
Senior Attorney
Office of Petitions

---

[10] The regulations at 37 C.F.R. §1.2 provide:

§1.2 Business to be transacted in writing.

All business with the Patent and Trademark Office should be transacted in writing.The personal attendance of applicants or their attorneys or agents at the Patent and Trademark Office is unnecessary. The action of the Patent and Trademark Office will be based exclusively on the written record in the Office. No attention will be paid to any alleged oral promise, stipulation,or understanding in relation to which there is disagreement or doubt.

UNITED STATES PATENT AND TRADEMARK OFFICE

Commissioner for Patents
United States Patent and Trademark Office
P.O. Box 1450
Alexandria, VA 22313-1450
www.uspto.gov

MYERS BIGEL SIBLEY & SAJOVEC
PO BOX 37428
RALEIGH NC 27627

COPY MAILED

MAY 21 2007

OFFICE OF PETITIONS

In re Application of :
Chickoti et al. :
Application No. 10/153,753 : ON PETITION
Filed: July 23, 2002 :
Attorney Dkt. No.: 5405.229IPDV :

This is a decision on the petition under 37 CFR 1.181 to withdraw the holding of abandonment, filed May 11, 2007.

The petition to withdraw the holding of abandonment is **GRANTED**.

This above-identified application became abandoned for failure to timely file a response to a final Office Action which was mailed on June 1, 2006. The final Office Action set a three (3) month shortened statutory period for reply. Accordingly, this application became abandoned on September 2, 2006. A Notice of Abandonment was mailed on March 21, 2007.

In the present petition, petitioner contends a timely reply in the form of a Notice of Appeal and three month extension of time was submitted on December 1, 2006.

A review of the record shows that a Notice of Appeal and three month request for extension of time was received on December 1, 2006. Further review shows that the response contained a certificate of mailing date of December 1, 2006 pursuant to 37 CFR 1.8.

The Notice of Abandonment is hereby vacated and the holding of abandonment is withdrawn.

The two-month period for filing an appeal brief (accompanied by the fee required by 37 CFR 1.17(c)), runs from the date of this decision. See 37 CFR §§ 41.31 and 41.37.

The application is being referred to Art Unit 1641 for further processing.

Telephone inquiries concerning this matter should be directed to the undersigned at (571) 272-3215.

Charlema R. Grant

Charlema R. Grant
Petitions Attorney
Office of Petitions

UNITED STATES PATENT AND TRADEMARK OFFICE

COMMISSIONER FOR PATENTS
UNITED STATES PATENT AND TRADEMARK OFFICE
P.O. BOX 1450
ALEXANDRIA, VA 22313-1450
www.uspto.gov

CLARK & ELBING LLP
101 FEDERAL STREET
BOSTON, MA 02110

COPY MAILED

APR 01 2005

OFFICE OF PETITIONS

In re Application of	:	
Ausubel, et al.	:	DECISION ON APPLICATION FOR
Application No. 10/153,754	:	PATENT TERM ADJUSTMENT
Filed: May 22, 2002	:	
Atty. Dkt. No.: 00786/263004	:	

This is a decision on the "APPLICATION FOR PATENT TERM ADJUSTMENT UNDER 37 CFR 1.705(b)" timely filed October 18, 2004 (certificate of mailing date of October 14, 2004).

The application for patent term adjustment ("PTA") under 37 C.F.R. § 1.705(b) is hereby **GRANTED**.

The Office will adjust the PAIR screen to reflect that the Patent Term Adjustment (PTA) determination at the time of mailing of the Notice of Allowance and Issue Fee Due reflects an adjustment of 44 days. A copy of the updated PAIR screen showing the correct determination is enclosed.

Applicants request that the Determination of Patent Term Adjustment be corrected from the 29 day determination indicated on the Determination of Patent Term Adjustment mailed July 14, 2004 to an adjustment of 44 days.

A review of the application history reveals that an adjustment of 111 days under 37 CFR 1.702(a)(2) can be attributed to the Office. In accordance with 37 CFR 1.703(a)(3), the adjustment began December 19, 2003, the day after the date that is four months from the date a reply to the restriction requirement was filed, and ended December 18, 2003, the date the non-final Office action was mailed. There were no further delays attributed to the Office.

The Office errantly entered November 19, 2002 as the date of reply to the Notice to File Missing Parts of Nonprovisional application, mailed June 26, 2002, rather than the correct date of November 4, 2002. Thus, the adjustment of 111 is properly reduced 39 days for applicants delay under 37 CFR 1.704(b). The delay began September 27, 2002, the day that is three months

after the date the Notice was mailed, and ended November 4, 2002, the date a reply was submitted.

The adjustment of 111 days is further reduced 28 days under 37 CFR 1.704(b). The reduction began March 19, 2004, the day after the date that is three months after the date the non-final Office action was mailed, and ended April 15, 2004, the date a response to the non-final Office action was filed.

In view thereof, at the time of Notice of Allowance, the application is entitled to a patent term adjustment of 44 days, as argued by applicant.

The required patent term adjustment application fee is $200.00. Applicants, however, have submitted $400.00. A refund of $200.00 has been requested from the Finance Office, Refund Section to Deposit Account No. 03-2095.

The application file is being forwarded to the Publications Division for issuance of a patent.

Telephone inquiries specific to this matter should be directed to Petitions Attorney Alesia M. Brown at (571) 272-3205.

Karin Ferriter
Senior Legal Advisor
Office of Patent Legal Administration
Office of Deputy Commissioner
for Patent Examination Policy

UNITED STATES PATENT AND TRADEMARK OFFICE

COMMISSIONER FOR PATENTS
UNITED STATES PATENT AND TRADEMARK OFFICE
P.O. BOX 1450
ALEXANDRIA, VA 22313-1450
WWW.USPTO.GOV

Paper No. None

COPY MAILED

MAR 03 2006

OFFICE OF PETITIONS

LEONG C. LEI
1867 YGNACIO VALLEY ROAD
PMB# 1008
WALNUT CREEK CA 94598

In re Application of	:	
Tsun-Zong Wu	:	
Application No. 10/153,771	:	DECISION ON PETITION UNDER
Filed: May 24, 2002	:	37 C.F.R. §1.181(A)
Attorney Docket Number: FP8637	:	
Title: FERRULE FOR ILLUMINATING	:	
UMBRELLA	:	

This is a decision on the petition under 37 CFR §1.181(a), filed April 15, 2004, to withdraw the holding of abandonment.

The Office regrets the delay in issuing this decision.

BACKGROUND

The above-identified application became abandoned for failure to reply in a timely manner to the non-final Office action, mailed July 10, 2003, which set a shortened statutory period for reply of three (3) months. No response was received, and no extensions of time under the provisions of 37 C.F.R. §1.136(a) were requested. Accordingly, the above-identified application became abandoned on October 11, 2003. A notice of abandonment was mailed February 24, 2004.

With the present petition, petitioner has asserted that the non-final Office action was never received. Petitioner has indicated that he has searched the file jacket and the docket records, and has included a copy of one page from a notebook.

RELEVANT PORTION OF THE MPEP

MPEP 711.03(c) states, in part:

> PETITION TO WITHDRAW HOLDING OF ABANDONMENT BASED ON FAILURE TO RECEIVE OFFICE ACTION

In Delgar v. Schulyer, 172 USPQ 513 (D.D.C. 1971), the court decided that the Office should mail a new Notice of Allowance in view of the evidence presented in support of the contention that the applicant's representative did not receive the original Notice of Allowance. Under the reasoning of Delgar, an allegation that an Office action was never received may be considered in a petition to withdraw the holding of abandonment. If adequately supported, the Office may grant the petition to withdraw the holding of abandonment and remail the Office action. That is, the reasoning of Delgar is applicable regardless of whether an application is held abandoned for failure to timely pay the issue fee (35 U.S.C. 151) or for failure to prosecute (35 U.S.C. 133).

To minimize costs and burdens to practitioners and the Office, the Office has modified the showing required to establish nonreceipt of an Office action. The showing required to establish nonreceipt of an Office communication must include a statement from the practitioner stating that the Office communication was not received by the practitioner and attesting to the fact that a search of the file jacket and docket records indicates that the Office communication was not received. A copy of the docket record where the nonreceived Office communication would have been entered had it been received and docketed must be attached to and referenced in practitioner's statement. For example, if a three month period for reply was set in the nonreceived Office action, a copy of the docket report showing all replies docketed for a date three months from the mail date of the nonreceived Office action must be submitted as documentary proof of nonreceipt of the Office action. See Notice entitled "Withdrawing the Holding of Abandonment When Office Actions Are Not Received," 1156 O.G. 53 (November 16, 1993).

The showing outlined above may not be sufficient if there are circumstances that point to a conclusion that the Office action may have been lost after receipt rather than a conclusion that the Office action was lost in the mail (e.g., if the practitioner has a history of not receiving Office actions).

Evidence of nonreceipt of an Office communication or action (e.g., Notice of Abandonment or an advisory action) other than that action to which reply was required to avoid abandonment would not warrant withdrawal of the holding of abandonment. Abandonment takes place by operation of law for failure to reply to an Office action or timely pay the issue fee, not by operation of the mailing of a Notice of Abandonment. See Lorenz v. Finkl, 333 F.2d 885, 889-90, 142 USPQ 26, 29-30 (CCPA 1964); Krahn v. Commissioner, 15 USPQ2d 1823, 1824 (E.D. Va 1990); In re Application of Fischer, 6 USPQ2d 1573, 1574 (Comm'r Pat. 1988).

Two additional procedures are available for reviving an application that has become abandoned due to a failure to reply to an Office Action: (1) a petition under 37 CFR 1.137(a) based upon unavoidable delay; and (2) a petition under 37 CFR 1.137(b) based on unintentional delay.

ANALYSIS

The showing in the instant petition is not sufficient to withdraw the holding of abandonment. Although Petitioner has stated that the Office communication was not received and that he searched the file jacket and the docket records, the printout Petitioner has supplied fails to establish non-receipt of the Office communication. The printout does not serve as a copy of the docket record where the non-received Office communication

would have been entered had it been received and docketed. The header of the page, "Title: FERRULE FOR ILLUMINATING UMBRELLA," makes it clear that the printout is associated with the present file, whereas a docket report is a mail log, recorded by the person who receives all incoming mail. A docket report should show all incoming mail received during the relevant time period. Hence, the submitted copy of the log which is associated with the present file fails to show the correspondence at issue was not received, and merely misplaced and filed with another file.

Furthermore, Petitioner has failed to submit a copy of the file jacket.

As such, Petitioner has not established non-receipt of the communication, and the petition must be **DISMISED**.

CONCLUSION

Any reply must be submitted within **TWO (2) MONTHS** from the mail date of this decision. Extensions of time under 37 C.F.R. §1.136(a) are permitted. The reply should include a cover letter entitled "Renewed Petition Under 37 C.F.R. §1.181." This is not a final agency action within the meaning of 5 U.S.C 704.

The renewed petition should indicate in a prominent manner that the attorney handling this matter is Paul Shanoski, and may be submitted by mail[1], hand-delivery[2], or facsimile[3].

Telephone inquiries regarding *this decision* should be directed to the undersigned at (571) 272-3225. All other inquiries concerning examination procedures or status of the application should be directed to the Technology Center.

Paul Shanoski
Senior Attorney
Office of Petitions
United States Patent and Trademark Office

Encl: copy of non-final Office Action

1 Mail Stop Petition, Commissioner for Patents, United States Patent and Trademark Office, P.O. Box 1450, Alexandria, VA, 22313-1450.
2 Customer Window, Randolph Building, 401 Dulaney Street, Alexandria, VA, 22314.
3 (571) 273-8300- please note this is a central facsimile number.

UNITED STATES PATENT AND TRADEMARK OFFICE

Commissioner for Patents
United States Patent and Trademark Office
P.O. Box 1450
Alexandria, VA 22313-1450
www.uspto.gov

Leong C. Lei
PMB#1008
1867 Ygnacio Valley Road
Walnut Creek, CA 94598

MAILED

NOV 03 2004

Director's Office
Group 3700

Paper No. 6

In re Application of
Chen, Chih-Ming
Application No.: 10/153,772
Filed: May 24, 2002

DECISION ON PETITION TO WITHDRAW HOLDING OF ABANDONMENT

This is a decision on petitioner's request filed 6/1/04 requesting withdrawal of the holding of abandonment of the above-identified application because the applicant did not receive the Office communication mailed on 7/8/03 at the correspondence address of record.

The petition is granted.

In support of the request, petitioner has provided a showing of non-receipt of the Office action in accordance with Official Gazette Notice 1156 O.G. 53 (November 16, 1993). MPEP 711.03(c)II.

In view of the above, the Notice of Abandonment mailed 4/26/04 is in error and is hereby vacated. The holding of abandonment is withdrawn.

The Office communication will be remailed and the shortened statutory period that was originally set forth in the Office communication shall be restarted to run from the mail date of the newly supplied Office action or notice.

Summary: Holding of Abandonment Withdrawn.

Richard A. Bertsch, Director
Technology Center 3700

UNITED STATES PATENT AND TRADEMARK OFFICE

Commissioner for Patents
United States Patent and Trademark Office
P.O. Box 1450
Alexandria, VA 22313-1450
www.uspto.gov

SUGHRUE MION, PLLC
2100 Pennsylvania Avenue, N.W.
Suite 800
Washington, DC. 20037

MAILED FROM
DIRECTORS OFFICE
FEB 2 1 2007
TECHNOLOGY CENTER 2800

In re Application of:
Takashi Shoji
Serial No.: 10/153,792
Filed: May 24, 2002
Attorney Docket No.: Q69229

DECISION ON PETITION TO WITHDRAW THE HOLDING OF ABANDONMENT

This is a decision on the petition to withdraw the holding of abandonment under 37 C.F.R. § 1.181 filed on December 14, 2005.

The petition is **GRANTED**.

A Notice of Abandonment was mailed on November 23, 2005 holding the application to be abandoned due to applicant's failure to timely file an Appeal Brief after the Notice of Appeal filed on April 27, 2005. The Notice of Abandonment of November 23, 2005 was premature. The 2 month time period to timely file an Appeal Brief after a Notice of Appeal may be extended up to 5 months under the provisions of 37 C.F.R. § 1.136. This is because a Notice of Appeal is not considered an action as used in 35 U.S.C. 133 and thus is not limited to the six month statutory period set forth in 35 U.S.C. 133. Thus, applicant could have extended his time to file an Appeal Brief to November 27, 2005 by filing a 5 month extension of time on or before November 27, 2005. Since November 27, 2005 was a Sunday, applicant could have extended his time to Monday November 28, 2005 under the provisions of 37 C.F.R. § 1.7.

A review of the application file indicates that on November 28, 2005 applicant filed a proper Request for Continued Examination (RCE) under 37 C.F.R. § 1.114 together with a petition and fee for a 5 month extension of time.

Accordingly, the Notice of Abandonment mailed November 23, 2005 is hereby **VACATED** and the holding of abandonment is withdrawn.

The amendment (i.e., the submission under 37 C.F.R. § 1.114(c)) filed with the RCE will be entered. The examiner will then prepare a new Office action in light of the amendment.

Any inquiries regarding this decision should be directed to Edward Westin at (571) 272-1638.

Janice A. Falcone

Janice A. Falcone, Director
Technology Center 2800
Semiconductors, Electrical and Optical
Systems and Components

UNITED STATES PATENT AND TRADEMARK OFFICE

Commissioner for Patents
United States Patent and Trademark Office
P.O. Box 1450
Alexandria, VA 22313-1450
www.uspto.gov

DUPLICATE

MAILED FROM
DIRECTORS OFFICE
FEB 2 1 2007
TECHNOLOGY CENTER 2800

SUGHRUE MION, PLLC
2100 Pennsylvania Avenue, N.W.
Suite 800
Washington, DC. 20037

In re Application of:
Takashi Shoji
Serial No.: 10/153,792
Filed: May 24, 2002
Attorney Docket No.: Q69229

DECISION ON PETITION TO WITHDRAW THE HOLDING OF ABANDONMENT

This is a decision on the petition to withdraw the holding of abandonment under 37 C.F.R. § 1.181 filed on December 14, 2005.

The petition is **GRANTED**.

A Notice of Abandonment was mailed on November 23, 2005 holding the application to be abandoned due to applicant's failure to timely file an Appeal Brief after the Notice of Appeal filed on April 27, 2005. The Notice of Abandonment of November 23, 2005 was premature. The 2 month time period to timely file an Appeal Brief after a Notice of Appeal may be extended up to 5 months under the provisions of 37 C.F.R. § 1.136. This is because a Notice of Appeal is not considered an action as used in 35 U.S.C. 133 and thus is not limited to the six month statutory period set forth in 35 U.S.C. 133. Thus, applicant could have extended his time to file an Appeal Brief to November 27, 2005 by filing a 5 month extension of time on or before November 27, 2005. Since November 27, 2005 was a Sunday, applicant could have extended his time to Monday November 28, 2005 under the provisions of 37 C.F.R. § 1.7.

A review of the application file indicates that on November 28, 2005 applicant filed a proper Request for Continued Examination (RCE) under 37 C.F.R. § 1.114 together with a petition and fee for a 5 month extension of time.

Accordingly, the Notice of Abandonment mailed November 23, 2005 is hereby **VACATED** and the holding of abandonment is withdrawn.

The amendment (i.e., the submission under 37 C.F.R. § 1.114(c)) filed with the RCE will be entered. The examiner will then prepare a new Office action in light of the amendment.

Any inquiries regarding this decision should be directed to Edward Westin at (571) 272-1638.

Janice A. Falcone

Janice A. Falcone, Director
Technology Center 2800
Semiconductors, Electrical and Optical
Systems and Components

UNITED STATES PATENT AND TRADEMARK OFFICE

Commissioner for Patents
United States Patent and Trademark Office
P.O. Box 1450
Alexandria, VA 22313-1450
www.uspto.gov

MAIL

JUN 0 3 2005

DIRECTOR OFFICE
TECHNOLOGY CENTER 2600

FOLEY AND LARDNER
3000 K STREET, N.W.
SUITE 500
WASHINGTON, D.C. 20007

In re Application of	:	
YOSHIO SHIRASAKI	:	
Application No. 10/153,819	:	DECISION ON REQUEST TO
Filed: May 24, 2002	:	WITHDRAW AS ATTORNEY
For: DEVICE FOR REASSEMBLING CELL DATA DEVICE FOR CIRCUIT EMULATION SERVICE AND METHOD OF ATM STNCHRONIZATION CONTROL	:	

This is a decision on the Request to Withdraw as Attorney/Agent of record filed on February 22, 2005.

A grantable request to withdraw as attorney/agent of record must do the following:
(1) indicate the present mailing address of the attorney(s)/agent(s) who seek(s) to withdraw, and
(2) be signed by each attorney/agent seeking to withdraw or clearly be signed on their behalf, and
(3) be *approved* at least thirty (30) days prior to the maximum extendable period for response to any outstanding Office Action, and
(4) indicate the address to which future correspondence should be mailed.

A Revocation and Power of Attorney was filed May 9, 2005. Accordingly, the request is **DISMISSED**.

All future correspondence will be sent to the below listed address until such a time as a proper request of change of correspondence address is filed.

Kenneth Wieder
Special Program Examiner
Technology Center 2600
Communications
(571) 272-2986

cc: MR. PAUL HARRITY
HARRITY & SNYDER
11240 WAPLES MILL ROAD, SUITE 300
FAIRFAX, VA 22030

UNITED STATES PATENT AND TRADEMARK OFFICE

Commissioner for Patents
United States Patent and Trademark Office
P.O. Box 1450
Alexandria, VA 22313-1450
www.uspto.gov

AUG 11 2004

Paper No. 080404

TOWNSEND AND TOWNSEND AND CREW
TWO EMBARCADERO CENTER, 8TH Floor
SAN FRANCISCO, CA 94111-3834

In re Application of:	:	
STEVEN A. SUNSHINE	:	
Serial No.: 10/153,833	:	DECISION ON REQUEST TO WITHDRAW
Filed: May 21, 2002	:	FROM RECORD
Attorney Docket No.: **18564C-003820US**	:	

This is a decision on the request to withdraw as attorney/agent of record under 37 C.F.R. § 1.36, filed March 08, 2004.

A grantable request to withdraw as attorney of record must be signed by every attorney seeking to withdraw or contain a clear indication that one attorney is signing on behalf of others. A request to withdraw will not be approved unless at least thirty (30) days would remain between the date of approval and the later of the expiration date of a time to file a response or the expiration date of the maximum time period, which can be extended under 37 C.F.R. § 1.136(a).

The request meets all the above stated requirements. The request was signed by Joseph R. Snyder, on behalf of himself and all the attorneys/agents of record. There is no outstanding Office action at this time.

The request is **APPROVED**.

There are no attorneys/agents of record at this time.

All future communications from the Office will be directed Foley & Lardner, at the below address, until otherwise notified by applicant.

Inquiries related to this decision should be directed to Lissi Marquis at (571) 272-1596.

Lissi Marquis, Special Programs Examiner
Technology Center 2800
Semiconductors, Electrical and Optical
Systems and Components

cc: FOLEY & LARDNER
3000 K STREET, NW, SUITE 500
WASHINGTON, DC 20007

UNITED STATES PATENT AND TRADEMARK OFFICE

Commissioner for Patents
United States Patent and Trademark Office
P.O. Box 1450
Alexandria, VA 22313-1450
www.uspto.gov

ENTELOS, INC.
c/o Law Offices of Karen E. Flick
P.O. Box 515
El Granada CA 94018-0515

MAILED

JUN 18 2008

Technology Center 2100

In re Application of:
Thomas S. Paterson et al.
Appl. No.: 10/153847
Filed: May 21, 2002
Attorney Docket : ENTL-003.US1
For: METHODS FOR PREDICTING BIOLOGICAL ACTIVITIES OF CELLULAR CONSTITUENTS

DECISION ON PETITION UNDER 37 CFR § 1.59

This is a decision on the petition under 37 CFR § 1.59(b), filed on December 5, 2007 (certificate of mailing date of December 3, 2007) to expunge documents submitted therewith.

The petition is **DISMISSED**.

Petitioner requests that the documents submitted on December 5, 2007 in response to a Requirement for Information under 37 CFR 1.105 made by the examiner in a previous Office action, be expunged from the record. Petitioner states that the documents submitted on December 5, 2007 are proprietary to Applicant and the information has not been otherwise made public once received. The petition fee set forth in 37 CFR § 1.17(g) has been paid.

The petition is premature because the application has not been allowed or abandoned. Accordingly, it is not appropriate to make a final determination of whether or not the material requested to be expunged is "material," with "materiality" being defined as any information which the examiner considers as being

important to a determination of patentability of the claims. Thus, the petition to expunge must be dismissed at this time.

During prosecution on the merits, the examiner will determine whether or not the identified documents are considered to be "material." Once prosecution on the merits is closed, applicant may re-submit a petition to expunge the information. No further fee is required for such a second submission of a petition under 37 CFR § 1.59 to expunge information. If the information is not considered by the examiner to be material, the information will be returned to applicant.

The identified documents are currently not available for public view.

Any inquiry concerning this decision should be directed to the undersigned whose telephone number is (571) 272-3719.

/Kakali Chaki/

Kakali Chaki
Quality Assurance Specialist
Technology Center 2100

UNITED STATES PATENT AND TRADEMARK OFFICE

UNITED STATES DEPARTMENT OF COMMERCE
United States Patent and Trademark Office
Address: COMMISSIONER FOR PATENTS
P.O. Box 1450
Alexandria, Virginia 22313-1450
www.uspto.gov

APPLICATION NO.	FILING DATE	FIRST NAMED INVENTOR	ATTORNEY DOCKET NO.	CONFIRMATION NO.
10/153,847	05/21/2002	Thomas S. Paterson	ENTL-003.US1	9736

55388 7590 06/18/2008
ENTELOS, INC.
c/o Law Offices of Karen E. Flick
P.O. Box 515
El Granada, CA 94018-0515

EXAMINER
JONES, HUGH M

ART UNIT	PAPER NUMBER
2128	

MAIL DATE	DELIVERY MODE
06/18/2008	PAPER

Please find below and/or attached an Office communication concerning this application or proceeding.

The time period for reply, if any, is set in the attached communication.

UNITED STATES PATENT AND TRADEMARK OFFICE

Commissioner for Patents
United States Patent and Trademark Office
P.O. Box 1450
Alexandria, VA 22313-1450
www.uspto.gov

Nixon & Vanderhye P.C.
8th Floor
1100 N. Glebe Rd.
Arlington VA 22201

COPY MAILED

DEC 2 2 2008

OFFICE OF PETITIONS

In re Application of	:	
Richard L. Veech	:	
Application No. 10/153,873	:	DECISION ON PETITIONS
Filed: May 24, 2002	:	UNDER 37 CFR 1.137(b) AND
Attorney Docket No. 604-641	:	37 CFR 1.78(a)(6)

This is a decision on the petition under 37 CFR 1.137(b), filed November 26, 2008, to revive the above-identified application. This is also a decision on the petition under 37 CFR 1.78(a)(6), filed November 26, 2008, to accept an unintentionally delayed claim under 35 U.S.C. 119(e) for the benefit of the prior-filed provisional Application No. 60/040,858 set forth in the Supplemental Application Data Sheet (ADS) filed December 15, 2008.

Petition Under 37 CFR 1.137(b)

The application became abandoned for failure to reply in a timely manner to the Restriction Requirement, mailed November 8, 2002, which set a shortened statutory period for reply of one (1) month or thirty (30) days (whichever is later). Petitioner obtained an extensions of time for response under the provisions of 37 CFR 1.136(a). Accordingly, the application became abandoned on April 9, 2003. A Notice of Abandonment was mailed on June 26, 2003.

The petition satisfies the requirements of 37 CFR 1.137(b) in that petitioner has submitted (1) the required reply under 37 CFR 1.137(c) in the form of a continuing application (i.e. Application No. 10/408,667); (2) the petition fee; and (3) a proper statement of unintentional delay. Accordingly, the petition under 37 CFR 1.137(b) is **GRANTED**.

This application is being revived solely for purposes of accepting an unintentionally delayed claim under 35 U.S.C. 119(e) for the benefit of prior-filed provisional Application No. 60/040,858.

Petition Under 37 CFR 1.78(a)(6)

A petition under 37 CFR 1.78(a)(6) is only applicable to those applications filed on or after November 29, 2000. Further, the petition is appropriate only after expiration of the period specified in 37 CFR 1.78(a)(5)(ii) and must be filed during the pendency of the nonprovisional application. In addition, the petition must be accompanied by:

(1) the reference required by 35 U.S.C. 119(e) and 37 CFR 1.78(a)(5)(i) to the prior-filed application, unless previously submitted;
(2) the surcharge set forth in § 1.17(t); and
(3) a statement that the entire delay between the date the claim was due under 37 CFR 1.78(a)(5)(ii) and the date the claim was filed was unintentional. The Director may require additional information where there is a question whether the delay was unintentional.

The Office notes that intermediate application, PCT/US98/05072, was filed on March 17, 1998, within twelve months of the filing date of prior-filed provisional Application No. 60/040,858, filed March 17, 1997, for which priority is claimed. A reference to the prior-filed provisional application has been included in the Supplemental ADS filed December 15, 2008. Accordingly, the petition under 37 CFR 1.78(a)(6) is **GRANTED**.

The granting of the petition to accept the delayed benefit claim to the prior-filed application under 37 CFR 1.78(a)(6) should not be construed as meaning that this application is entitled to the benefit of the filing date of the prior-filed application. In order for this application to be entitled to the benefit of the prior-filed application, all other requirements under 35 U.S.C. 119(e) and 37 CFR 1.78(a)(4) and (a)(5) must be met. Similarly, the fact that the corrected Filing Receipt accompanying this decision on petition includes the prior-filed application should not be construed as meaning that applicant is entitled to the claim for benefit of priority to the prior-filed application noted thereon. Accordingly, the examiner will, in due course, consider this benefit claim and determine whether the application is entitled to the benefit of the earlier filing date.

A corrected Filing Receipt, which includes the priority claim to the prior-filed provisional application, accompanies this decision on petition.

The current surcharge set forth in 37 CFR 1.17(t) for acceptance of an unintentionally delayed claim for priority is $1,410.00; however, petitioner paid a fee of $130.00. The Office will charge the Deposit Account for the balance due of $1,280.00, as authorized.

The application is being forwarded to Technology Center AU 1614 for consideration by the examiner of the claim under 35 U.S.C. 119(e) for the benefit of priority to the prior-filed provisional application.

Telephone inquiries regarding this decision may be directed to the undersigned at (571) 272-3211.

Christina Tartera Donnell

Christina Tartera Donnell
Senior Petitions Attorney
Office of Petitions

ATTACHMENT: Corrected Filing Receipt

UNITED STATES PATENT AND TRADEMARK OFFICE

UNITED STATES DEPARTMENT OF COMMERCE
United States Patent and Trademark Office
Address: COMMISSIONER FOR PATENTS
P.O. Box 1450
Alexandria, Virginia 22313-1450
www.uspto.gov

APPLICATION NUMBER	FILING or 371(c) DATE	GRP ART UNIT	FIL FEE REC'D	ATTY.DOCKET.NO	TOT CLAIMS	IND CLAIMS
10/153,873	05/24/2002	1614	1740	604-641	31	11

CONFIRMATION NO. 7853

CORRECTED FILING RECEIPT

23117
NIXON & VANDERHYE, PC
901 NORTH GLEBE ROAD, 11TH FLOOR
ARLINGTON, VA 22203

OC000000033745470

Date Mailed: 12/22/2008

Receipt is acknowledged of this non-provisional patent application. The application will be taken up for examination in due course. Applicant will be notified as to the results of the examination. Any correspondence concerning the application must include the following identification information: the U.S. APPLICATION NUMBER, FILING DATE, NAME OF APPLICANT, and TITLE OF INVENTION. Fees transmitted by check or draft are subject to collection. Please verify the accuracy of the data presented on this receipt. **If an error is noted on this Filing Receipt, please submit a written request for a Filing Receipt Correction. Please provide a copy of this Filing Receipt with the changes noted thereon. If you received a "Notice to File Missing Parts" for this application, please submit any corrections to this Filing Receipt with your reply to the Notice. When the USPTO processes the reply to the Notice, the USPTO will generate another Filing Receipt incorporating the requested corrections**

Applicant(s)

Richard L. Veech, Rockville, MD;

Assignment For Published Patent Application

BTG International Limited

Power of Attorney:

Leonard Mitchard--29009

Domestic Priority data as claimed by applicant

This application is a CON of 09/843,694 04/30/2001
which is a CON of 09/397,100 09/16/1999 PAT 6,323,237
which is a CIP of PCT/US98/05072 03/17/1998
which claims benefit of 60/040,858 03/17/1997

Foreign Applications

If Required, Foreign Filing License Granted: 06/18/2002

The country code and number of your priority application, to be used for filing abroad under the Paris Convention, is **US 10/153,873**

Projected Publication Date: Not Applicable

Non-Publication Request: No

Early Publication Request: No

Title

Therapeutic compositions

Preliminary Class

514

PROTECTING YOUR INVENTION OUTSIDE THE UNITED STATES

Since the rights granted by a U.S. patent extend only throughout the territory of the United States and have no effect in a foreign country, an inventor who wishes patent protection in another country must apply for a patent in a specific country or in regional patent offices. Applicants may wish to consider the filing of an international application under the Patent Cooperation Treaty (PCT). An international (PCT) application generally has the same effect as a regular national patent application in each PCT-member country. The PCT process **simplifies** the filing of patent applications on the same invention in member countries, but **does not result** in a grant of "an international patent" and does not eliminate the need of applicants to file additional documents and fees in countries where patent protection is desired.

Almost every country has its own patent law, and a person desiring a patent in a particular country must make an application for patent in that country in accordance with its particular laws. Since the laws of many countries differ in various respects from the patent law of the United States, applicants are advised to seek guidance from specific foreign countries to ensure that patent rights are not lost prematurely.

Applicants also are advised that in the case of inventions made in the United States, the Director of the USPTO must issue a license before applicants can apply for a patent in a foreign country. The filing of a U.S. patent application serves as a request for a foreign filing license. The application's filing receipt contains further information and guidance as to the status of applicant's license for foreign filing.

Applicants may wish to consult the USPTO booklet, "General Information Concerning Patents" (specifically, the section entitled "Treaties and Foreign Patents") for more information on timeframes and deadlines for filing foreign patent applications. The guide is available either by contacting the USPTO Contact Center at 800-786-9199, or it can be viewed on the USPTO website at http://www.uspto.gov/web/offices/pac/doc/general/index.html.

For information on preventing theft of your intellectual property (patents, trademarks and copyrights), you may wish to consult the U.S. Government website, http://www.stopfakes.gov. Part of a Department of Commerce initiative, this website includes self-help "toolkits" giving innovators guidance on how to protect intellectual property in specific countries such as China, Korea and Mexico. For questions regarding patent enforcement issues, applicants may call the U.S. Government hotline at 1-866-999-HALT (1-866-999-4158).

LICENSE FOR FOREIGN FILING UNDER

Title 35, United States Code, Section 184

Title 37, Code of Federal Regulations, 5.11 & 5.15

GRANTED

The applicant has been granted a license under 35 U.S.C. 184, if the phrase "IF REQUIRED, FOREIGN FILING LICENSE GRANTED" followed by a date appears on this form. Such licenses are issued in all applications where the conditions for issuance of a license have been met, regardless of whether or not a license may be required as

set forth in 37 CFR 5.15. The scope and limitations of this license are set forth in 37 CFR 5.15(a) unless an earlier license has been issued under 37 CFR 5.15(b). The license is subject to revocation upon written notification. The date indicated is the effective date of the license, unless an earlier license of similar scope has been granted under 37 CFR 5.13 or 5.14.

This license is to be retained by the licensee and may be used at any time on or after the effective date thereof unless it is revoked. This license is automatically transferred to any related applications(s) filed under 37 CFR 1.53(d). This license is not retroactive.

The grant of a license does not in any way lessen the responsibility of a licensee for the security of the subject matter as imposed by any Government contract or the provisions of existing laws relating to espionage and the national security or the export of technical data. Licensees should apprise themselves of current regulations especially with respect to certain countries, of other agencies, particularly the Office of Defense Trade Controls, Department of State (with respect to Arms, Munitions and Implements of War (22 CFR 121-128)); the Bureau of Industry and Security, Department of Commerce (15 CFR parts 730-774); the Office of Foreign AssetsControl, Department of Treasury (31 CFR Parts 500+) and the Department of Energy.

NOT GRANTED

No license under 35 U.S.C. 184 has been granted at this time, if the phrase "IF REQUIRED, FOREIGN FILING LICENSE GRANTED" DOES NOT appear on this form. Applicant may still petition for a license under 37 CFR 5.12, if a license is desired before the expiration of 6 months from the filing date of the application. If 6 months has lapsed from the filing date of this application and the licensee has not received any indication of a secrecy order under 35 U.S.C. 181, the licensee may foreign file the application pursuant to 37 CFR 5.15(b).

IN THE UNITED STATES PATENT AND TRADEMARK OFFICE

In re Patent Application of

VEECH, Richard L. Atty. Ref.: 604-641; Confirmation No. 7853

Appl. No. 10/153,873 TC/A.U. 1614

Filed: May 24, 2002 Examiner: Reamer, J.

For: THERAPEUTIC COMPOSITIONS

* * * * * * * * * * *

November 26, 2008

Mail Stop Petitions
Commissioner for Patents
P.O. Box 1450
Alexandria, VA 22313-1450

12/22/2008 GARIAS 00000004 141140 10153873
01 FC:1454 1410.00 DA

Sir:

RULE 78 PETITION

Pursuant to the Decision Dismissing Petition under 37 CFR §1.78(a)(3) mailed October 30, 2008 in application Serial No. 10/763,393 (the Decision), filed January 26, 2004, Applicant hereby petitions under 37 CFR §1.78(a)(6) for entry of the Application Data Sheet presented as a separate document herewith and bearing the electronic signature of the undersigned.

Furthermore, pursuant to the Decision, the present Petition is being accompanied by a Petition to Revive the present application under 37 CFR §1.137(b).

The fee, if any is required, for the present Petition is to be charged to our deposit account number **14-1140** under the notation "**604-707**".

Adjustment date: 12/22/2008 GARIAS
11/28/2008 INTEFSW 00001826 141140 10153873
01 FC:1464 130.00 CR

Favorable action on the present petition is awaited.

Respectfully submitted,

NIXON & VANDERHYE P.C.

By: /Leonard C. Mitchard/
Leonard C. Mitchard
Reg. No. 29,009

LCM:lff
901 North Glebe Road, 11th Floor
Arlington, VA 22203-1808
Telephone: (703) 816-4000
Facsimile: (703) 816-4100

IN THE UNITED STATES PATENT AND TRADEMARK OFFICE

In re Patent Application of

VEECH, Richard L. Atty. Ref.: 604-641; Confirmation No. 7853

Appl. No. 10/153,873 TC/A.U. 1614

Filed: May 24, 2002 Examiner: Reamer, J.

For: THERAPEUTIC COMPOSITIONS

* * * * * * * * * * *

November 26, 2008

Mail Stop Petitions
Commissioner for Patents
P.O. Box 1450
Alexandria, VA 22313-1450

Sir:

PETITION TO REVIVE

Pursuant to the Decision Dismissing Petition under 37 CFR §1.78(a)(3) mailed October 30, 2008 in application Serial No. 10/763,393 (the Decision), filed January 26, 2004, Applicant hereby petitions under 37 CFR §1.137(b) to revive the present application to permit entry of an Application Data Sheet.

Furthermore, pursuant to the Decision, the present Petition is being accompanied by a Petition under 37 CFR §1.78(a)(6) for entry of the Application Data Sheet.

The entire delay in filing the required reply from the due date for the reply until the filing of a grantable petition was unintentional.

The fee for the present Petition is to be charged to our deposit account number **14-1140** under the notation "**604-707**".

Favorable action on the present petition is awaited.

Respectfully submitted,

NIXON & VANDERHYE P.C.

By: /Leonard C. Mitchard/
Leonard C. Mitchard
Reg. No. 29,009

LCM:lff
901 North Glebe Road, 11th Floor
Arlington, VA 22203-1808
Telephone: (703) 816-4000
Facsimile: (703) 816-4100

UNITED STATES PATENT AND TRADEMARK OFFICE

UNITED STATES DEPARTMENT OF COMMERCE
United States Patent and Trademark Office
Address: COMMISSIONER FOR PATENTS
P.O. Box 1450
Alexandria, Virginia 22313-1450
www.uspto.gov

APPLICATION NUMBER	FILING or 371(c) DATE	GRP ART UNIT	FIL FEE REC'D	ATTY.DOCKET.NO	TOT CLAIMS	IND CLAIMS
10/153,873	05/24/2002	1614	1740	604-641	31	11

CONFIRMATION NO. 7853

CORRECTED FILING RECEIPT

23117
NIXON & VANDERHYE, PC
901 NORTH GLEBE ROAD, 11TH FLOOR
ARLINGTON, VA 22203

OC000000033745470

Date Mailed: 12/22/2008

Receipt is acknowledged of this non-provisional patent application. The application will be taken up for examination in due course. Applicant will be notified as to the results of the examination. Any correspondence concerning the application must include the following identification information: the U.S. APPLICATION NUMBER, FILING DATE, NAME OF APPLICANT, and TITLE OF INVENTION. Fees transmitted by check or draft are subject to collection. Please verify the accuracy of the data presented on this receipt. **If an error is noted on this Filing Receipt, please submit a written request for a Filing Receipt Correction. Please provide a copy of this Filing Receipt with the changes noted thereon. If you received a "Notice to File Missing Parts" for this application, please submit any corrections to this Filing Receipt with your reply to the Notice. When the USPTO processes the reply to the Notice, the USPTO will generate another Filing Receipt incorporating the requested corrections**

Applicant(s)

Richard L. Veech, Rockville, MD;

Assignment For Published Patent Application

BTG International Limited

Power of Attorney:

Leonard Mitchard--29009

Domestic Priority data as claimed by applicant

This application is a CON of 09/843,694 04/30/2001
which is a CON of 09/397,100 09/16/1999 PAT 6,323,237
which is a CIP of PCT/US98/05072 03/17/1998
which claims benefit of 60/040,858 03/17/1997

Foreign Applications

If Required, Foreign Filing License Granted: 06/18/2002

The country code and number of your priority application, to be used for filing abroad under the Paris Convention, is **US 10/153,873**

Projected Publication Date: Not Applicable

Non-Publication Request: No

Early Publication Request: No

Title

Therapeutic compositions

Preliminary Class

514

PROTECTING YOUR INVENTION OUTSIDE THE UNITED STATES

Since the rights granted by a U.S. patent extend only throughout the territory of the United States and have no effect in a foreign country, an inventor who wishes patent protection in another country must apply for a patent in a specific country or in regional patent offices. Applicants may wish to consider the filing of an international application under the Patent Cooperation Treaty (PCT). An international (PCT) application generally has the same effect as a regular national patent application in each PCT-member country. The PCT process **simplifies** the filing of patent applications on the same invention in member countries, but **does not result** in a grant of "an international patent" and does not eliminate the need of applicants to file additional documents and fees in countries where patent protection is desired.

Almost every country has its own patent law, and a person desiring a patent in a particular country must make an application for patent in that country in accordance with its particular laws. Since the laws of many countries differ in various respects from the patent law of the United States, applicants are advised to seek guidance from specific foreign countries to ensure that patent rights are not lost prematurely.

Applicants also are advised that in the case of inventions made in the United States, the Director of the USPTO must issue a license before applicants can apply for a patent in a foreign country. The filing of a U.S. patent application serves as a request for a foreign filing license. The application's filing receipt contains further information and guidance as to the status of applicant's license for foreign filing.

Applicants may wish to consult the USPTO booklet, "General Information Concerning Patents" (specifically, the section entitled "Treaties and Foreign Patents") for more information on timeframes and deadlines for filing foreign patent applications. The guide is available either by contacting the USPTO Contact Center at 800-786-9199, or it can be viewed on the USPTO website at http://www.uspto.gov/web/offices/pac/doc/general/index.html.

For information on preventing theft of your intellectual property (patents, trademarks and copyrights), you may wish to consult the U.S. Government website, http://www.stopfakes.gov. Part of a Department of Commerce initiative, this website includes self-help "toolkits" giving innovators guidance on how to protect intellectual property in specific countries such as China, Korea and Mexico. For questions regarding patent enforcement issues, applicants may call the U.S. Government hotline at 1-866-999-HALT (1-866-999-4158).

LICENSE FOR FOREIGN FILING UNDER

Title 35, United States Code, Section 184

Title 37, Code of Federal Regulations, 5.11 & 5.15

GRANTED

The applicant has been granted a license under 35 U.S.C. 184, if the phrase "IF REQUIRED, FOREIGN FILING LICENSE GRANTED" followed by a date appears on this form. Such licenses are issued in all applications where the conditions for issuance of a license have been met, regardless of whether or not a license may be required as

set forth in 37 CFR 5.15. The scope and limitations of this license are set forth in 37 CFR 5.15(a) unless an earlier license has been issued under 37 CFR 5.15(b). The license is subject to revocation upon written notification. The date indicated is the effective date of the license, unless an earlier license of similar scope has been granted under 37 CFR 5.13 or 5.14.

This license is to be retained by the licensee and may be used at any time on or after the effective date thereof unless it is revoked. This license is automatically transferred to any related applications(s) filed under 37 CFR 1.53(d). This license is not retroactive.

The grant of a license does not in any way lessen the responsibility of a licensee for the security of the subject matter as imposed by any Government contract or the provisions of existing laws relating to espionage and the national security or the export of technical data. Licensees should apprise themselves of current regulations especially with respect to certain countries, of other agencies, particularly the Office of Defense Trade Controls, Department of State (with respect to Arms, Munitions and Implements of War (22 CFR 121-128)); the Bureau of Industry and Security, Department of Commerce (15 CFR parts 730-774); the Office of Foreign AssetsControl, Department of Treasury (31 CFR Parts 500+) and the Department of Energy.

NOT GRANTED

No license under 35 U.S.C. 184 has been granted at this time, if the phrase "IF REQUIRED, FOREIGN FILING LICENSE GRANTED" DOES NOT appear on this form. Applicant may still petition for a license under 37 CFR 5.12, if a license is desired before the expiration of 6 months from the filing date of the application. If 6 months has lapsed from the filing date of this application and the licensee has not received any indication of a secrecy order under 35 U.S.C. 181, the licensee may foreign file the application pursuant to 37 CFR 5.15(b).

UNITED STATES PATENT AND TRADEMARK OFFICE

DAC

OIPE IAP13
DEC 31 2008
PATENT & TRADEMARK OFFICE

Commissioner for Patents
United States Patent and Trademark Office
P.O. Box 1450
Alexandria, VA 22313-1450
www.uspto.gov

Nixon & Vanderhye P.C.
8th Floor
1100 N. Glebe Rd.
Arlington VA 22201

COPY MAILED
DEC 22 2008
OFFICE OF PETITIONS

In re Application of	:	
Richard L. Veech	:	
Application No. 10/153,873	:	DECISION ON PETITIONS
Filed: May 24, 2002	:	UNDER 37 CFR 1.137(b) AND
Attorney Docket No. 604-641	:	37 CFR 1.78(a)(6)

COMPLETED

This is a decision on the petition under 37 CFR 1.137(b), filed November 26, 2008, to revive the above-identified application. This is also a decision on the petition under 37 CFR 1.78(a)(6), filed November 26, 2008, to accept an unintentionally delayed claim under 35 U.S.C. 119(e) for the benefit of the prior-filed provisional Application No. 60/040,858 set forth in the Supplemental Application Data Sheet (ADS) filed December 15, 2008.

Petition Under 37 CFR 1.137(b)

The application became abandoned for failure to reply in a timely manner to the Restriction Requirement, mailed November 8, 2002, which set a shortened statutory period for reply of one (1) month or thirty (30) days (whichever is later). Petitioner obtained an extensions of time for response under the provisions of 37 CFR 1.136(a). Accordingly, the application became abandoned on April 9, 2003. A Notice of Abandonment was mailed on June 26, 2003.

The petition satisfies the requirements of 37 CFR 1.137(b) in that petitioner has submitted (1) the required reply under 37 CFR 1.137(c) in the form of a continuing application (i.e. Application No. 10/408,667); (2) the petition fee; and (3) a proper statement of unintentional delay. Accordingly, the petition under 37 CFR 1.137(b) is **GRANTED**.

This application is being revived solely for purposes of accepting an unintentionally delayed claim under 35 U.S.C. 119(e) for the benefit of prior-filed provisional Application No. 60/040,858.

Petition Under 37 CFR 1.78(a)(6)

A petition under 37 CFR 1.78(a)(6) is only applicable to those applications filed on or after November 29, 2000. Further, the petition is appropriate only after expiration of the period specified in 37 CFR 1.78(a)(5)(ii) and must be filed during the pendency of the nonprovisional application. In addition, the petition must be accompanied by:

(1) the reference required by 35 U.S.C. 119(e) and 37 CFR 1.78(a)(5)(i) to the prior-filed application, unless previously submitted;
(2) the surcharge set forth in § 1.17(t); and
(3) a statement that the entire delay between the date the claim was due under 37 CFR 1.78(a)(5)(ii) and the date the claim was filed was unintentional. The Director may require additional information where there is a question whether the delay was unintentional.

The Office notes that intermediate application, PCT/US98/05072, was filed on March 17, 1998, within twelve months of the filing date of prior-filed provisional Application No. 60/040,858, filed March 17, 1997, for which priority is claimed. A reference to the prior-filed provisional application has been included in the Supplemental ADS filed December 15, 2008. Accordingly, the petition under 37 CFR 1.78(a)(6) is **GRANTED**.

The granting of the petition to accept the delayed benefit claim to the prior-filed application under 37 CFR 1.78(a)(6) should not be construed as meaning that this application is entitled to the benefit of the filing date of the prior-filed application. In order for this application to be entitled to the benefit of the prior-filed application, all other requirements under 35 U.S.C. 119(e) and 37 CFR 1.78(a)(4) and (a)(5) must be met. Similarly, the fact that the corrected Filing Receipt accompanying this decision on petition includes the prior-filed application should not be construed as meaning that applicant is entitled to the claim for benefit of priority to the prior-filed application noted thereon. Accordingly, the examiner will, in due course, consider this benefit claim and determine whether the application is entitled to the benefit of the earlier filing date.

A corrected Filing Receipt, which includes the priority claim to the prior-filed provisional application, accompanies this decision on petition.

The current surcharge set forth in 37 CFR 1.17(t) for acceptance of an unintentionally delayed claim for priority is $1,410.00; however, petitioner paid a fee of $130.00. The Office will charge the Deposit Account for the balance due of $1,280.00, as authorized.

The application is being forwarded to Technology Center AU 1614 for consideration by the examiner of the claim under 35 U.S.C. 119(e) for the benefit of priority to the prior-filed provisional application.

Telephone inquiries regarding this decision may be directed to the undersigned at (571) 272-3211.

Christina Tartera Donnell

Christina Tartera Donnell
Senior Petitions Attorney
Office of Petitions

ATTACHMENT: Corrected Filing Receipt

UNITED STATES PATENT AND TRADEMARK OFFICE

UNITED STATES DEPARTMENT OF COMMERCE
United States Patent and Trademark Office
Address: COMMISSIONER FOR PATENTS
P.O. Box 1450
Alexandria, Virginia 22313-1450
www.uspto.gov

APPLICATION NUMBER	FILING or 371(c) DATE	GRP ART UNIT	FIL FEE REC'D	ATTY.DOCKET.NO	TOT CLAIMS	IND CLAIMS
10/153,873	05/24/2002	1614	1740	604-641	31	11

CONFIRMATION NO. 7853

CORRECTED FILING RECEIPT

23117
NIXON & VANDERHYE, PC
901 NORTH GLEBE ROAD, 11TH FLOOR
ARLINGTON, VA 22203

OC000000033745470

Date Mailed: 12/22/2008

Receipt is acknowledged of this non-provisional patent application. The application will be taken up for examination in due course. Applicant will be notified as to the results of the examination. Any correspondence concerning the application must include the following identification information: the U.S. APPLICATION NUMBER, FILING DATE, NAME OF APPLICANT, and TITLE OF INVENTION. Fees transmitted by check or draft are subject to collection. Please verify the accuracy of the data presented on this receipt. **If an error is noted on this Filing Receipt, please submit a written request for a Filing Receipt Correction. Please provide a copy of this Filing Receipt with the changes noted thereon. If you received a "Notice to File Missing Parts" for this application, please submit any corrections to this Filing Receipt with your reply to the Notice. When the USPTO processes the reply to the Notice, the USPTO will generate another Filing Receipt incorporating the requested corrections**

Applicant(s)

Richard L. Veech, Rockville, MD;

Assignment For Published Patent Application

BTG International Limited

Power of Attorney:

Leonard Mitchard--29009

Domestic Priority data as claimed by applicant

This application is a CON of 09/843,694 04/30/2001
which is a CON of 09/397,100 09/16/1999 PAT 6,323,237
which is a CIP of PCT/US98/05072 03/17/1998
which claims benefit of 60/040,858 03/17/1997

Foreign Applications

If Required, Foreign Filing License Granted: 06/18/2002

The country code and number of your priority application, to be used for filing abroad under the Paris Convention, is **US 10/153,873**

Projected Publication Date: Not Applicable

Non-Publication Request: No

Early Publication Request: No

Title

Therapeutic compositions

Preliminary Class

514

PROTECTING YOUR INVENTION OUTSIDE THE UNITED STATES

Since the rights granted by a U.S. patent extend only throughout the territory of the United States and have no effect in a foreign country, an inventor who wishes patent protection in another country must apply for a patent in a specific country or in regional patent offices. Applicants may wish to consider the filing of an international application under the Patent Cooperation Treaty (PCT). An international (PCT) application generally has the same effect as a regular national patent application in each PCT-member country. The PCT process **simplifies** the filing of patent applications on the same invention in member countries, but **does not result** in a grant of "an international patent" and does not eliminate the need of applicants to file additional documents and fees in countries where patent protection is desired.

Almost every country has its own patent law, and a person desiring a patent in a particular country must make an application for patent in that country in accordance with its particular laws. Since the laws of many countries differ in various respects from the patent law of the United States, applicants are advised to seek guidance from specific foreign countries to ensure that patent rights are not lost prematurely.

Applicants also are advised that in the case of inventions made in the United States, the Director of the USPTO must issue a license before applicants can apply for a patent in a foreign country. The filing of a U.S. patent application serves as a request for a foreign filing license. The application's filing receipt contains further information and guidance as to the status of applicant's license for foreign filing.

Applicants may wish to consult the USPTO booklet, "General Information Concerning Patents" (specifically, the section entitled "Treaties and Foreign Patents") for more information on timeframes and deadlines for filing foreign patent applications. The guide is available either by contacting the USPTO Contact Center at 800-786-9199, or it can be viewed on the USPTO website at http://www.uspto.gov/web/offices/pac/doc/general/index.html.

For information on preventing theft of your intellectual property (patents, trademarks and copyrights), you may wish to consult the U.S. Government website, http://www.stopfakes.gov. Part of a Department of Commerce initiative, this website includes self-help "toolkits" giving innovators guidance on how to protect intellectual property in specific countries such as China, Korea and Mexico. For questions regarding patent enforcement issues, applicants may call the U.S. Government hotline at 1-866-999-HALT (1-866-999-4158).

LICENSE FOR FOREIGN FILING UNDER

Title 35, United States Code, Section 184

Title 37, Code of Federal Regulations, 5.11 & 5.15

GRANTED

The applicant has been granted a license under 35 U.S.C. 184, if the phrase "IF REQUIRED, FOREIGN FILING LICENSE GRANTED" followed by a date appears on this form. Such licenses are issued in all applications where the conditions for issuance of a license have been met, regardless of whether or not a license may be required as

set forth in 37 CFR 5.15. The scope and limitations of this license are set forth in 37 CFR 5.15(a) unless an earlier license has been issued under 37 CFR 5.15(b). The license is subject to revocation upon written notification. The date indicated is the effective date of the license, unless an earlier license of similar scope has been granted under 37 CFR 5.13 or 5.14.

This license is to be retained by the licensee and may be used at any time on or after the effective date thereof unless it is revoked. This license is automatically transferred to any related applications(s) filed under 37 CFR 1.53(d). This license is not retroactive.

The grant of a license does not in any way lessen the responsibility of a licensee for the security of the subject matter as imposed by any Government contract or the provisions of existing laws relating to espionage and the national security or the export of technical data. Licensees should apprise themselves of current regulations especially with respect to certain countries, of other agencies, particularly the Office of Defense Trade Controls, Department of State (with respect to Arms, Munitions and Implements of War (22 CFR 121-128)); the Bureau of Industry and Security, Department of Commerce (15 CFR parts 730-774); the Office of Foreign AssetsControl, Department of Treasury (31 CFR Parts 500+) and the Department of Energy.

NOT GRANTED

No license under 35 U.S.C. 184 has been granted at this time, if the phrase "IF REQUIRED, FOREIGN FILING LICENSE GRANTED" DOES NOT appear on this form. Applicant may still petition for a license under 37 CFR 5.12, if a license is desired before the expiration of 6 months from the filing date of the application. If 6 months has lapsed from the filing date of this application and the licensee has not received any indication of a secrecy order under 35 U.S.C. 181, the licensee may foreign file the application pursuant to 37 CFR 5.15(b).

UNITED STATES PATENT AND TRADEMARK OFFICE

COMMISSIONER FOR PATENTS
UNITED STATES PATENT AND TRADEMARK OFFICE
P.O. BOX 1450
ALEXANDRIA, VA 22313-1450
www.uspto.gov

MAR 18 2004

STEPHEN B. MAEBIUS
FOLEY AND LARDNER
SUITE 500
3000 K STREET NW
WASHINGTON DC 20007

In re Application of	:
David M. Goldenberg et al	:
Serial No.: 10/153,882	: WITHDRAWAL OF ATTORNEY
Filed: May 24, 2002	:
Attorney Docket No.: 018733-1133	:

This is in response to applicants' attorneys' request, filed February 26, 2004, to withdraw from representation in the above identified application.

37 CFR 10.40 Withdrawal from employment.
(b) Mandatory withdrawal . A practitioner representing a client before the Office shall withdraw from employment if:
(1) The practitioner knows or it is obvious that the client is bringing a legal action, commencing a proceeding before the Office, conducting a defense, or asserting a position in litigation or any proceeding pending before the Office, or is otherwise having steps taken for the client, merely for the purpose of harassing or maliciously injuring any person;
(2) The practitioner knows or it is obvious that the practitioner's continued employment will result in violation of a Disciplinary Rule;
(3) The practitioner's mental or physical condition renders it unreasonably difficult for the practitioner to carry out the employment effectively; or
(4) The practitioner is discharged by the client.
(c) Permissive withdrawal. If paragraph (b) of this section is not applicable, a practitioner may not request permission to withdraw in matters pending before the Office unless such request or such withdrawal is because:
(1) The petitioner's client:
(i) Insists upon presenting a claim or defense that is not warranted under existing law and cannot be supported by good faith argument for an extension, modification, or reversal of existing law;
(ii) Personally seeks to pursue an illegal course of conduct;
(iii) Insists that the practitioner pursue a course of conduct that is illegal or that is prohibited under a Disciplinary Rule;
(iv) By other conduct renders it unreasonably difficult for the practitioner to carry out the employment effectively;
(v) Insists, in a matter not pending before a tribunal, that the practitioner engage in conduct that is contrary to the judgment and advice of the practitioner but not prohibited under the Disciplinary Rule; or
(vi) Has failed to pay one or more bills rendered by the practitioner for an unreasonable period of time or has failed to honor an agreement to pay a retainer in advance of the performance of legal services.
(2) The practitioner's continued employment is likely to result in a violation of a Disciplinary Rule;
(3) The practitioner's inability to work with co-counsel indicates that the best interests of the client likely will be served by withdrawal;
(4) The practitioner's mental or physical condition renders it difficult for the practitioner to carry out the employment effectively;
(5) The practitioner's client knowingly and freely assents to termination of the employment; or

(6) The practitioner believes in good faith, in a proceeding pending before the Office, that the Office will find the existence of other good cause for withdrawal.

Applicants' attorney has provided no reason for withdrawal, as required.

The request to withdraw is **DISMISSED**.

Should there be any questions with regard to this letter please contact William R. Dixon, Jr. by letter addressed to the Director, Technology Center 1600, PO BOX 1450, ALEXANDRIA, VA 22313-1450, or by telephone at 571-272-0519 or by facsimile transmission at Office facsimile number.

William R. Dixon, Jr.
Special Program Examiner
Technology Center 1600

UNITED STATES PATENT AND TRADEMARK OFFICE

Commissioner for Patents
United States Patent and Trademark Office
Washington, D.C. 20231
www.uspto.gov

Paper No. 6

WORLDCOM, INC.
TECHNOLOGY LAW DEPARTMENT
1133 19TH STREET NW
WASHINGTON DC 20036

COPY MAILED

APR 0 2 2003

OFFICE OF PETITIONS

In re Application of
Jie Pan, Scott R. Kotrla and
Louis A. McKeague
Application No. 10/153,922
Filed: May 24, 2002
Title: SYSTEMS AND METHODS FOR
CONTROLLING NETWORK-BOUND TRAFFIC

DECISION ACCORDING STATUS
UNDER 37 CFR § 1.47(a)

This is a decision on the petition under 37 CFR § 1.47, filed August 26, 2002.

The petition is **GRANTED**.

The above-identified application was filed on May 24, 2002, with a declaration executed by joint inventors Scott Kotrla and Louis McKeague on behalf of themselves and on behalf of non-signing inventor Pan. However, no petition under § 1.47 accompanied this declaration. Accordingly, on July 5, 2002, applicants were mailed a "Notice to File Missing Parts of Nonprovisional Application," requiring a declaration with the signature of inventor Pan, along with the surcharge for late filing under § 1.16(l). This Notice set a period for reply of two months from the mailing date of the notice, with extensions of time obtainable under § 1.136(a).

Applicants timely responded with the instant petition and the late surcharge. Rule 47 applicants maintain that status under 37 CFR 1.47 is proper because joint inventor Pan refuses to join in the application for patent. A grantable petition under 37 CFR 1.47(a) requires: (1) proof that the non-signing inventor cannot be reached or refuses to sign the oath or declaration after having been presented with the application papers (specification, claims and drawings); (2) an acceptable oath or declaration in compliance with 35 U.S.C. §§ 115 and 116; (3) the petition fee; and (4) a statement of the last known address of the non-signing inventor.

By statement on petition of patent attorney Eden U.I. Straight and supporting documentary evidence, petitioner has shown that inventor Pan has refused to join in the application after having been presented with the application papers. Attorney Straight specifically attests to inventor Pan having orally acknowledged receipt of the application papers and having stated that he was unwilling to review the application and execute the declaration. Copies of the cover letter and Airborne Express, evidencing delivery of the application papers to the non-signing inventor, were made a part of the statement.

The declaration filed May 24, 2002, and the petition have been reviewed and found in compliance with 37 CFR 1.47(a).

This application is hereby accorded Rule 1.47(a) status.

As provided in new Rule 1.47(c), this Office will forward notice of this application's filing to the non-signing inventor at the address given in the petition. Notice of the filing of this application will also be published in the Official Gazette.

The application file is being forwarded to Technology Center 2661 for examination in due course.

Telephone inquiries regarding this decision should be directed to the undersigned at (703) 305-0309.

Nancy Johnson

Nancy Johnson
Petitions Attorney
Office of Petitions

UNITED STATES PATENT AND TRADEMARK OFFICE

COMMISSIONER FOR PATENTS
UNITED STATES PATENT AND TRADEMARK OFFICE
WASHINGTON, D.C. 20231
www.uspto.gov
DIW 09-02

Paper No. 4

MILBANK, TWEED, HADLEY & MCCLOY LLP
1 CHASE MANHATTAN PLAZA
NEW YORK NY 10005-1413

COPY MAILED

SEP 2 0 2002

OFFICE OF PETITIONS

In re Application of	:	
Grinshetyn et al.	:	
Application No. 10/153,932	:	ON PETITION
Filed: 23 May, 2002	:	
Attorney's Docket No. 36287-02300	:	

This is a decision on the petition filed on 31 July, 2002, requesting that the above-identified application be accorded a filing date of 23 May, 2002, with Pages 1 & 2 of the specification as a part of the original disclosure.

The petition is granted.

The application was filed on 23 May, 2002. However, on 24 July, 2002, Initial Patent Examination Division mailed a "Notice" stating that the application had been accorded a filing date but that, *inter alia*, Pages 1 & 2 of the specification (description and claims) appeared to have been omitted.

In response, on 31 July, 2002, Pages 1 & 2 of the specification, the present petition, and a petition fee were filed. Petitioners argue that Pages 1 & 2 were filed with the other application papers on 23 May, 2002, but was subsequently misplaced in the U.S. Patent and Trademark Office (Office). In support, a copy of petitioners' postcard receipt was supplied with the present petition. The postcard receipt shows an Office date stamp of 23 May, 2002, with the above-identified application number, and acknowledges receipt of, *inter alia*, 40 pages of specification. Petitioners request that the application, including Pages 1 & 2 of the specification, be accorded a filing date of 23 May, 2002.

A review of the record reveals that no Pages 1 & 2 of the specification has been located among the application papers

deposited on 23 May, 2002. However, the evidence is convincing that the application papers deposited on 23 May, 2002, included Pages 1 & 2 of the specification, which were subsequently misplaced in the Office. Therefore, the application, including Pages 1 & 2 of the specification, is entitled to a filing date of 23 May, 2002.

The "Notice" mailed on 24 June, 2002, is vacated to the extent that it stated that Pages 1 & 2 appeared to have been omitted from the application.

In view of the above, the petition is granted. The petition fee will be refunded to counsel's deposit account, No. 13-3250.

The application will be processed and examined using the copies of Pages 1 & 2 supplied on 31 July, 2002.

Receipt is acknowledged of the substitute drawings filed on 31 July, 2002. The substitute drawings are not considered part of the original disclosure and must be reviewed by the examiner for new matter.

The application is being returned to Initial Patent Examination Division for further processing with a filing date of 23 May, 2002, using the application papers filed on 23 May, 2002, and the copies of Pages 1 & 2 supplied on 31 July, 2002.

Telephone inquires should be directed to the undersigned at 703-308-6918.

Douglas I. Wood
Senior Petitions Attorney
Office of Petitions
Office of the Deputy Commissioner
for Patent Examination Policy

SPE RESPONSE FOR CERTIFICATE OF CORRECTION

Paper No.:2152006

DATE : February 15, 2006

TO SPE OF : ART UNIT 3661

SUBJECT : Request for Certificate of Correction on Patent No.: 6792335

A response is requested with respect to the accompanying request for a certificate of correction.

Please complete this form and return with file, within **7** days to:
Certificates of Correction Branch - PK 3-910
Palm location **7590** - Tel. No. 305-8201

With respect to the change(s) requested, correcting Office and/or Applicant's errors, should the patent read as shown in the certificate of correction? No new matter should be introduced, nor should the scope or meaning of the claims be changed.

Thank You For Your Assistance **Certificates of Correction Branch**

The request for issuing the above-identified correction(s) is hereby:
Note your decision on the appropriate box.

☒ **Approved** **All** changes apply.

☐ **Approved in Part** Specify below which changes **do not** apply.

☐ **Denied** State the reasons for denial below.

Comments:

THOMAS G. BLACK
SUPERVISORY PATENT EXAMINER
GROUP 3600

SPE: Thomas Black **Art Unit** 3661

PTO/SB/44 (04-04)
Approved for use through 04/30/2007. OMB 0651-0033
U S. Patent and Trademark Office; U S DEPARTMENT OF COMMERCE
Under the Paperwork Reduction Act of 1995, no persons are required to respond to a collection of information unless it displays a valid OMB control number
(Also Form PTO-1050)

UNITED STATES PATENT AND TRADEMARK OFFICE
CERTIFICATE OF CORRECTION

PATENT NO: 6,792,335 B2

DATED: September 14, 2004

INVENTOR(S): William P. Ross, et al.

It is certified that error appears in the above-identified patent and that said Letters Patent are hereby corrected as shown below:

COVER

Other publications:
After "Westernstates Manufacturing", delete –200– and insert –2000– therefor.

COLUMN 8

Line 18, delete –maybe– and insert –may be– therefor.

DRAWINGS

Sheet 12, Figure 13, in the legend, please associate "Halbach Adhesion" with the circle-marked line and "Traditional Adhesion" with the X-marked line as shown below.

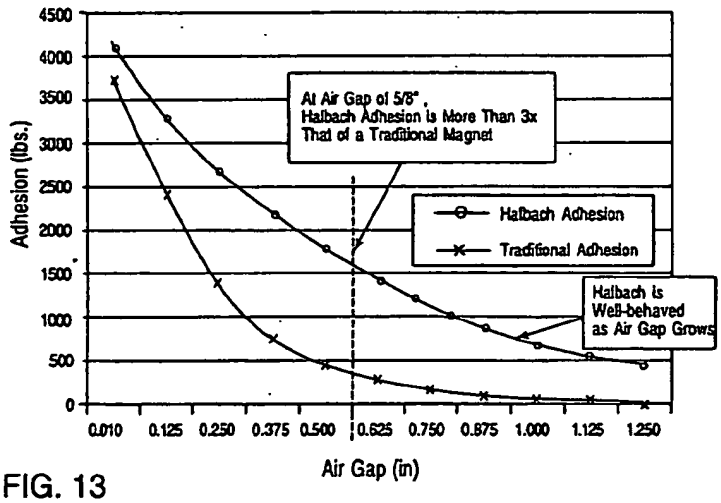

FIG. 13

PATENT NO. 6,792,335

MAILING ADDRESS OF SENDER:

Edward L. Pencoske, Esq.
Jones Day
500 Grant Street, Suite 3100
Pittsburgh, PA 15219-2502

No. of additional copies: 1

This collection of information is required by 37 CFR 1 .322, 1 .323, and 1 .324. The information is required to obtain or retain a benefit by the public which is to file (and by the USPTO to process) an application. Confidentiality is governed by 35 U .S .C. 122 and 37 CFR 1,14, This collection is estimated to take 1 0 hour to complete, including gathering, preparing, and submitting the completed application form to the USPTO. Time will vary depending upon the individual case. Any comments on the amount of time you require to complete this form and/or suggestions for reducing this burden, should be sent to the Chief Information Officer, US Patent and Trademark Office, U .S. Department of Commerce, P .O. Box 1450, Alexandria, VA 22313-1450. DO NOT SEND FEES OR COMPLETED FORMS TO THIS ADDRESS. SEND TO: **Attention Certificate of Corrections Branch, Commissioner for Patents, P .O. Box 1450, Alexandria, VA 22313-1450.**

If you need assistance in completing the form, call 1-800-PTO-9199 and select option 2.

FEB 02 2006

UNITED STATES PATENT AND TRADEMARK OFFICE

Commissioner for Patents
United States Patent and Trademark Office
P.O. Box 1450
Alexandria, VA 22313-1450
www.uspto.gov

SCHWEGMAN, LUNDBERG, WOESSNER & KLUTH, P.A.
P.O. BOX 2938
MINNEAPOLIS MN 55402

COPY MAILED

JUN 14 2006

OFFICE OF PETITIONS

In re Application of	:	
Giobbi, John J.	:	DECISION ON PETITION
Application No. 10/153,979	:	TO WITHDRAW
Filed: May 23, 2002	:	FROM RECORD
Attorney Docket No. MD-1-CIP	:	

This is a decision on the Request to Withdraw as attorney or agent of record under 37 C.F.R. § 1.36(b), filed December 14, 2005.

The request is **NOT APPROVED** as moot.

A review of the file record indicates that the power of attorney to attorneys associated with Customer Number 21186 has been revoked by the assignee of the entire interest of the patent application. Accordingly, the request to withdraw under 37 C.F.R. § 1.36(b) is moot.

All future communications from the Office will continue to be directed to the below-listed address until otherwise notified by applicant.

Telephone inquires concerning this decision should be directed to Petitions Examiner Liana Chase at 571-272- 3206. All other inquires concerning either the examination or status of the application should be directed to the Technology Center.

David Bucci
Petitions Examiner
Office of Petitions

cc:

FENWICK & WEST LLP
SILICON VALLEY CENTER
801 CALIFORNIA STREET
MOUNTAIN VIEW CA 94041

UNITED STATES PATENT AND TRADEMARK OFFICE

COMMISSIONER FOR PATENTS
UNITED STATES PATENT AND TRADEMARK OFFICE
WASHINGTON, D.C. 20231
www.uspto.gov

Paper No. 4

JULIUS TABIN
FITCH EVEN TABIN & FLANNERY
135 S. LASALLE ST., SUITE 900
CHICAGO, IL 60603

COPY MAILED

JUL 1 6 2002

OFFICE OF PETITIONS

In re Application of	:	
Valerio Cigaina	:	
Application No. 10/154,012	:	NOTICE
Filed: May 23, 2002	:	
Attorney Docket No. 73666	:	

This is a notice regarding your request for acceptance of a fee deficiency submission under 37 CFR 1.28. On September 1, 1998, the Court of Appeals for the Federal Circuit held that 37 CFR 1.28(c) is the sole provision governing the time for correction of the erroneous payment of the issue fee as a small entity. **See DH Technology v. Synergystex International, Inc. 154 F.3d 1333, 47 USPQ2d 1865 (Fed. Cir. Sept. 1, 1998).**

The Office no longer investigates or rejects original or reissue applications under 37 CFR 1.56. **1098 Off. Gaz. Pat. Office 502 (January 3, 1989)**. Therefore, nothing in this Notice is intended to imply that an investigation was done.

Your fee deficiency submission under 37 CFR 1.28 is hereby **ACCEPTED**.

Inquiries related to this communication should be directed to the Office of Petitions Staff at (703) 305-9285.

This file is being forwarded to Technology Center 3700.

Irvin Dingle
Petitions Examiner
Office of Petitions
Office of the Deputy Commissioner
for Patent Examination Policy

UNITED STATES PATENT AND TRADEMARK OFFICE

Commissioner for Patents
United States Patent and Trademark Office
P.O. Box 1450
Alexandria, VA 22313-1450
www.uspto.gov

MERCHANT & GOULD (MICROSOFT)
P.O. BOX 2903
MINNEAPOLIS MN 55402-0903

COPY MAILED

AUG 31 2006

OFFICE OF PETITIONS

In re Application of :
Dave D. Straube et al :
Application No. 10/154,014 : ON PETITION
Filed: May 23, 2002 :
Attorney Docket No. 215474 :

This is a decision on the petition filed August 29, 2006, under 37 CFR 1.313(c)(2), requesting withdrawal of the above-identified application from issue.

The petition is **dismissed** as moot for the reasons stated below.

A review of the file record discloses that a Notice of Allowance was mailed on May 9, 2006, with the issue fee being due on or before August 9, 2006. The issue fee in this case has not been paid.

37 CFR 1.313(c)(2) provides for withdrawal of an application from issue after payment of the issue fee. In the instant case, as noted above, the issue fee in reply to the Notice of Allowance of May 9, 2006, has not been received. Therefore, the filing of a petition to withdraw this application from issue is unnecessary at this time. The mere filing of an RCE and submission will effectively withdraw an application from issue prior to payment of the issue fee. In view thereof, the petition to withdraw from issue is dismissed as involving a moot issue.

No fees were charged for the petition to withdraw from issue and the RCE submitted on August 29, 2006, since the petition is dismissed as moot and an RCE and submission were submitted on June 8, 2006.

Inquiries concerning this decision may be directed to the undersigned at (571) 272-3208.

This matter is being referred to Technology Center Art Unit 2194.

Karen Creasy

Karen Creasy
Petitions Examiner
Office of Petitions

UNITED STATES PATENT AND TRADEMARK OFFICE

Commissioner for Patents
United States Patent and Trademark Office
P.O. Box 1450
Alexandria, VA 22313-1450
www.uspto.gov

JOHN S. ARTZ
ARTZ & ARTZ, P.C.
SUITE 250
28333 TELEGRAPH ROAD
SOUTHFIELD, MI 48034

COPY MAILED

MAY 1 9 2005

OFFICE OF PETITIONS

In re Application of :
Russell W. Strong :
Application No. 10/154,021 :
Filed: May 23, 2002 :
Attorney Docket No. IVI 1003 PUS :

ON PETITION

This is a decision on the petition under 37 CFR 1.137(b), filed March 21, 2005, to revive the above-identified application.

The petition is **GRANTED**.

The above-identified application became abandoned for failure to reply in a timely manner to the Notice to File Corrected Application Papers (Notice) mailed July 2, 2002. The Notice set a period for reply of two (2) months from the mail date of the Notice. No extensions of time under the provisions of 37 CFR 1.136(a) were obtained. Accordingly, the above-identified application became abandoned on September 3, 2002. A Notice of Abandonment was mailed on January 28, 2004.

The file is being forwarded to the Office of Initial Patent Examination for further processing.

Telephone inquiries concerning this matter may be directed to the undersigned at (571) 272-3228.

Edward J. Tannouse
Petitions Attorney
Office of Petitions/Patent
United States Patent and Trademark Office

UNITED STATES PATENT AND TRADEMARK OFFICE

Commissioner for Patents
United States Patent and Trademark Office
P.O. Box 1450
Alexandria, VA 22313-1450
www.uspto.gov

HAYNES AND BOONE, LLP
901 Main Street, Suite 3100
Dallas, Texas 75202-3789

MAY 24 2007

In re Application of: Charles R. Elliott et al. Serial No.: 10/154,038 Filed: May 22, 2002 Attorney Docket No.: 21573.17	: : : : :	DECISION *SUA SPONTE* WITHDRAWING HOLDING OF ABANDONMENT

This is a decision, *sua sponte*, withdrawing the holding of abandonment of the above-identified application.

A final Office action was mailed on May 19, 2006, setting a three-month shortened statutory period for response thereto. In an apparent failure to receive a response, the application was held abandoned and a Notice of Abandonment was mailed on May 2, 2007.

Although no petition or request to withdraw the holding of abandonment in this application has been filed, the Notice of Abandonment is hereby vacated and the holding of abandonment is withdrawn in view of the fact that applicant timely filed on June 29, 2006 an interview summary with an acknowledgement of a verbal agreement that a new office action will be issued before the maximum statutory period expired and no reply from the applicant was required. The agreement is now recalled and corroborated by the examiner although no examiner's Interview Summary was made of record.

A new non-final Office Action will be prepared by the examiner in due course.

Any inquiry regarding this decision should be directed to Lincoln Donovan, Supervisory Patent Examiner, Art Unit 2837, at (571) 272-1988.

Richard K. Seidel, Group Director
Technology Center 2800
Semiconductors, Electrical and Optical
Systems and Components

UNITED STATES PATENT AND TRADEMARK OFFICE

Commissioner for Patents
United States Patent and Trademark Office
P.O. Box 1450
Alexandria, VA 22313-1450
www.uspto.gov

COPY MAILED

NOV 1 3 2007

OFFICE OF PETITIONS

Rissman Jobse Hendricks & Oliverio, LLP
One State Street
Suite 800
Boston, MA 02109

In re Application of	:	
Mark Scott Kressin	:	
Application No. 10/154,043	:	DECISION ON PETITION
Filed: May 23, 2002	:	TO WITHDRAW
Attorney Docket No. 260-141	:	FROM RECORD
	:	

This is a decision on the Request to Withdraw as attorney or agent of record under 37 C.F.R. § 1.36(b), filed June 26, 2007.

The request is **NOT APPROVED** as moot.

A review of the file record indicates that the power of attorney to Rissman Jobse Hendricks & Oliverio, LLP has been revoked by the assignee of the patent application on June 27, 2007. Accordingly, the request to withdraw under 37 C.F.R. § 1.36(b) is moot.

All future communications from the Office will continue to be directed to the below-listed address until otherwise notified by applicant.

Telephone inquires concerning this decision should be directed to Terri Williams at 571-272-2991.

T. Williams

Terri Williams
Petitions Examiner
Office of Petitions

cc: **Lotus and Rational Software**
McGuinness & Manaras LLP
125 Nagog Park
Acton, MA 01720

UNITED STATES PATENT AND TRADEMARK OFFICE

Commissioner for Patents
United States Patent and Trademark Office
P.O. Box 1450
Alexandria, VA 22313-1450
www.uspto.gov

NEKTAR THERAPEUTICS
201 INDUSTRIAL ROAD
SAN CARLOS, CA 94070

MAILED

JAN 29 2010

OFFICE OF PETITIONS

In re Patent No. 6,838,076	:	
Issue Date: January 4, 2005	:	
Application No. 10/154,057	:	ON PETITION
Filed: May 21, 2002	:	
Attorney Docket No. 0100.00	:	

This is a decision in response to a petition filed December 9, 2009, under 37 CFR 1.378(c), to accept the unintentionally delayed payment of a maintenance fee for the above-identified patent.

The petition is **GRANTED**.

This patent expired on January 5, 2009 for failure to pay the 3 ½ year maintenance fee. Since this petition was submitted within twenty-four months after the six-month grace period provided in 37 CFR 1.362(e), the petition was timely filed under the provisions of 37 CFR 1.378(c).

The maintenance fee is hereby accepted and the above-identified patent is reinstated as of the mail date of this decision.

It is not apparent whether the person signing the statement of unintentional delay was in a position to have firsthand or direct knowledge of the facts and circumstances of the delay at issue. Nevertheless, such statement is being treated as having been made as the result of a reasonable inquiry into the facts and circumstances of such delay. In the event that such an inquiry has not been made, petitioner must make such an inquiry. If such inquiry results in the discovery that the delay in paying the maintenance fee under 37 CFR 1.378(c) was intentional, petitioner must notify the Office.

There is no indication that the person signing the petition was ever given a power of attorney or authorization of agent to prosecute the application. However in accordance with 37 CFR 1.34 (a), the signature appearing on the correspondence shall constitute a representation to the United States Patent and Trademark Office that he/she is authorized to represent the particular party on whose behalf he/she acts.

Petitioner will not receive future correspondence related to maintenance fees for the patent unless a "Fee Address" Indication Form (see PTO/SB/47) is submitted.

Telephone inquiries concerning this decision should be directed to the undersigned at (571) 272-6059.

A Kelley

Alicia Kelley
Petitions Examiner
Office of Petitions

UNITED STATES PATENT AND TRADEMARK OFFICE

Commissioner for Patents
United States Patent and Trademark Office
P.O. Box 1450
Alexandria, VA 22313-1450
www.uspto.gov

JJGJR.: 03-05

Paper No: __

JOHN S. ARTZ
ARTZ & ARTZ, P.C.
SUITE 250
28333 TELEGRAPH ROAD
SOUTHFIELD MI 48034

COPY MAILED
APR 0 1 2005
OFFICE OF PETITIONS

In re Application of	:	
Strong	:	
Application No. 10/154,077	:	DECISION
Filing Date: 23 May, 2002	:	
Attorney Docket No. IVI 1016 PUS	:	

This is a decision on the petition filed on 21 March, 2005, alleging unintentional delay under 37 C.F.R. §1.137(b).

For the reasons set forth below, the petition as considered under 37 C.F.R. §1.137(b) is **GRANTED**.

BACKGROUND

The record reflects that:

- Petitioner failed to reply timely and properly to the Notice to File Corrected Application Papers (corrected drawings) mailed on 26 January, 2004, with reply due absent extension of time on or before 26 March, 2004;

- the application went abandoned after midnight 26 March, 2004;

- it does not appear that the Office mailed the Notice of Abandonment before this petition was filed;
- the instant petition (with fee) was filed on 21 March, 2005, and was accompanied by corrected drawings as the reply and the required statement in support of the allegation of unintentional delay.

STATUTES, REGULATIONS AND ANALYSIS

Congress has authorized the Commissioner to "revive an application if the delay is shown to the satisfaction of the Commissioner to have been "unavoidable." 35 U.S.C. §133 (1994).[1]

The regulations at 37 C.F.R. §1.137(a) and (b) set forth the requirements for a petitioner to revive a previously unavoidably or unintentionally, respectively, abandoned application under this congressional grant of authority. The language of 35 U.S.C. §133 and 37 C.F.R. §1.137(a) is clear, unambiguous, and without qualification: the delay in tendering the reply to the outstanding Office action, as well as filing the first petition seeking revival, must have been unavoidable for the reply now to be accepted on petition.[2]

Delays in responding properly raise the question whether delays are unavoidable.[3] Where there is a question whether the delay was unavoidable, Petitioners must meet the burden of establishing that the delay was unavoidable within the meaning of 35 U.S.C. §133 and 37 C.F.R. §1.137(a).[4] And the Petitioner must be diligent in attending to the matter.[5] Failure to do so does not constitute the care required under Pratt, and so cannot satisfy the test for diligence and due care.

(By contrast, unintentional delays are those that do not satisfy the very strict statutory and

---

[1] 35 U.S.C. §133 provides:
35 U.S.C. §133 Time for prosecuting application.
Upon failure of the applicant to prosecute the application within six months after any action therein, of which notice has been given or mailed to the applicant, or within such shorter time, not less than thirty days, as fixed by the Commissioner in such action, the application shall be regarded as abandoned by the parties thereto, unless it be shown to the satisfaction of the Commissioner that such delay was unavoidable.

[2] Therefore, by example, an unavoidable delay in the payment of the Filing Fee might occur if a reply is shipped by the US Postal Service, but due to catastrophic accident, the delivery is not made.

[3] See: *Changes to Patent Practice and Procedure; Final Rule Notice*, 62 *Fed. Reg.* at 53158-59 (October 10, 1997), 1203 *Off. Gaz. Pat. Office* at 86-87 (October 21, 1997).

[4] See: In re Application of G, 11 USPQ2d 1378, 1380 (Comm'r Pats. 1989).

[5] See: Diligence in Filing Petitions to Revive and Petitions to Withdraw the Holding of Abandonment, 1124 Off. Gaz. Pat. Office 33 (March 19, 1991). It was and is Petitioner's burden to exercise diligence in seeking either to have the holding of abandonment withdrawn or the application revived. See 1124 Off. Gaz. Pat. Office supra.

regulatory requirements of unavoidable delay, and also, by definition, are not intentional.[6]))

The requirements for a grantable petition under 37 C.F.R. §1.137(b) are the petition and fee, a showing of unintentional delay, a proper reply, and–where appropriate--a terminal disclaimer and fee.

Petitioner has satisfied the petition, fee, reply and statement/showing requirements of the regulation.

CONCLUSION

The instant petition under 37 C.F.R. §1.137(b) hereby is **granted**.

The instant application is forwarded to OIPE for further processing before being forwarded for examination in due course.

Telephone inquiries concerning this decision may be directed to the undersigned at (571) 272-3214.

John J. Gillon, Jr.
Senior Attorney
Office of Petitions

[6] Therefore, by example, an unintentional delay in the reply might occur if the reply and transmittal form are to be prepared for shipment by the US Postal Service, but other pressing matters distract one's attention and the mail is not timely deposited for shipment.

UNITED STATES PATENT AND TRADEMARK OFFICE

Commissioner for Patents
United States Patent and Trademark Office
P.O. Box 1450
Alexandria, VA 22313-1450
www.uspto.gov

PATENT, COPYRIGHT & TRADEMARK LAW GROUP
4199 KINROSS LAKES PARKWAY
SUITE 275
RICHFIELD OH 44286

COPY MAILED

MAR 0 5 2009

OFFICE OF PETITIONS

In re Patent No. 6,773,123 :
Issue Date: August 10, 2004 :
Application No. 10/154,101 : ON PETITION
Filed: May 23, 2002 :
Attorney Docket No: **1063** :

This is a decision on the petition filed January 5, 2009 under 37 CFR 1.378(c)[1], to accept the delayed payment of the maintenance fee for the above-identified patent.

The petition is **GRANTED.**

The patent issued on August 10, 2004. The first maintenance fee due could have been paid during the period from August 10, 2007 to February 11, 2008 or, with a surcharge during the period from February 12, 2008 to August 10, 2008. Accordingly, this patent expired on August 10, 2008 for failure to timely remit the first maintenance fee.

Accordingly, the maintenance fee in this case is hereby accepted and the above-identified patent is hereby reinstated as of the mail date of this decision. Fees in the amount of $490.00 for the first maintenance fee and $1,640.00 for the surcharge have been applied.

Telephone inquiries concerning this matter may be directed to the undersigned Petitions Attorney at (571) 272-3212.

Patricia Faison-Ball

Patricia Faison-Ball
Senior Petitions Attorney
Office of Petitions

[1] 37 CFR 1.378(c) provides that a petition to accept an unintentionally delayed payment of a maintenance fee must be filed within twenty-four months of the six-month grace period provided in § 1.362(e) and must include:
(1) The required maintenance fee set forth in § 1.20(e) through (g);
(2) The surcharge set forth in § 1.20(l)(2); and
(3) A statement that the delay in payment of the maintenance fee was unintentional.

SPE RESPONSE FOR CERTIFICATE OF CORRECTION

Paper No.:20060827

DATE : August 27, 2006

TO SPE OF : ART UNIT 1732

SUBJECT : Request for Certificate of Correction on Patent No.: 7,083,746

A response is requested with respect to the accompanying request for a certificate of correction.

Please complete this form and return with file, within **7** days to:
Certificates of Correction Branch - PK 3-910
Palm location **7590** - Tel. No. 305-8201

With respect to the change(s) requested, correcting Office and/or Applicant's errors, should the patent read as shown in the certificate of correction? No new matter should be introduced, nor should the scope or meaning of the claims be changed.

Thank You For Your Assistance **Certificates of Correction Branch**

The request for issuing the above-identified correction(s) is hereby:
Note your decision on the appropriate box.

☒ **Approved** **All** changes apply.

☐ **Approved in Part** Specify below which changes **do not** apply.

☐ **Denied** State the reasons for denial below.

Comments:

All the changes are necessary and the patent should read as shown in the certificate of correction dated August 15, 2006.

SPE: Christina Johnson 8/28/06 **Art Unit** 1732

UNITED STATES PATENT AND TRADEMARK OFFICE

Commissioner for Patents
United States Patent and Trademark Office
P.O. Box 1450
Alexandria, VA 22313-1450
www.uspto.gov

JOHN A SHEDDEN
272 HARBOR RIDGE DRIVE
STATEVILLE, NC 28677

MAILED

JUN 10 2009

OFFICE OF PETITIONS

In re Application of	:	
Costa and Kostka	:	
Application No. 10/154,109	:	Letter Notifying Applicant the
Filed: May 22, 2002	:	Application Has Been Accorded
Attorney Docket No. RD 99007 CON	:	Status Under 37 CFR 1.47
For: Snowmaking Process	:	

This is in response to petition under 37 CFR 1.47 filed May 22, 2002, and supplemented by the Office on June 1, 2009

The application is hereby accorded Rule 1.47(a) status.

For the reasons below, the petition is dismissed as moot.

The instant application is a continuation of Application No. 09/564,116. A declaration signed by only one of the two inventors and a petition under 37 CFR 1.47(a) were filed in Application No. 09/564,116, on December 15, 2000. As of May 22, 2002, the Office had not yet mailed a decision in response to the December 15, 2000 petition filed in Application No. 09/564,116.

On May 22, 2002, petitioner filed the instant application including a copy of the declaration filed in Application No. 09/564,116, and a copy of the petition filed in Application No. 09/564,116.

Computer records indicate a decision granting the petition in Application No. 09/564,116, was mailed July 10, 2002.

The issue fee was paid in the instant application on April 27, 2009. Subsequently, the recognized the instant application had never been accorded status under 37 CFR 1.47(a).

When a parent application has been accorded status under 37 CFR 1.47, an applicant may submit a copy of the declaration from the parent application and a copy of the parent application's Rule 47 decision letter instead of submitting a new petition under 37 CFR 1.47.[1]

[1] 37 CFR 1.63(d)(3) states, "Where the executed oath or declaration of which a copy is submitted for a continuation or divisional application was originally filed in a prior application accorded status under § 1.47, the copy of the executed oath or declaration for such prior application must be accompanied by . . . A copy of the decision granting a petition to accord § 1.47 status to the prior application, unless all inventors or legal representatives have filed an oath or declaration to join in an application accorded status under § 1.47 of which the continuation or divisional application claims a benefit."

The instant application contains a copy of the declaration from the parent application. The Office has placed a copy of the Rule 47 decision from Application No. 09/564,116 in the file wrapper for the instant application.

The declaration is accepted and the signing inventor may prosecute the application on behalf of the non-signing inventor.

Telephone inquiries regarding this communication should be directed to Petitions Attorney Steven Brantley at (571) 272-3203.

Charles Steven Brantley
Petitions Attorney
Office of Petitions

UNITED STATES PATENT AND TRADEMARK OFFICE

Commissioner for Patents
United States Patent and Trademark Office
P.O. Box 1450
Alexandria, VA 22313-1450
www.uspto.gov

JJGJR.: 03-05

Paper No: __

RUSSELL N. RIPPAMONTI, ESQ.
JENKENS & GILCHRIST, P.C.
SUITE 3200
1445 ROSS AVENUE
DALLAS TX 75202-2799

COPY MAILED
APR 2 9 2005
OFFICE OF PETITIONS

In re Application of	:	
Hidalgo	:	
Application No. 10/154,125	:	DECISION
Filing Date: 23 May, 2002	:	
Attorney Docket No. 32151-00280	:	

This is a decision on the petition filed on 21 January, 2005, alleging unintentional delay under 37 C.F.R. §1.137(b).

For the reasons set forth below, the petition as considered under 37 C.F.R. §1.137(b) is **GRANTED**.

BACKGROUND

The record reflects that:

- Petitioner failed to reply timely and properly to the non-final Office action mailed on 15 July, 2003, with reply due absent extension of time on or before 15 October, 2003;
- the application went abandoned after midnight 15 October, 2003;

- the Office mailed the Notice of Abandonment on 10 March, 2004;
- the instant petition (with fee) was filed on 21 January, 2005, and was accompanied by an amendment as the reply and the required statement in support of the allegation of unintentional delay.

STATUTES, REGULATIONS AND ANALYSIS

Congress has authorized the Commissioner to "revive an application if the delay is shown to the satisfaction of the Commissioner to have been "unavoidable." 35 U.S.C. §133 (1994).[1]

The regulations at 37 C.F.R. §1.137(a) and (b) set forth the requirements for a petitioner to revive a previously unavoidably or unintentionally, respectively, abandoned application under this congressional grant of authority. The language of 35 U.S.C. §133 and 37 C.F.R. §1.137(a) is clear, unambiguous, and without qualification: the delay in tendering the reply to the outstanding Office action, as well as filing the first petition seeking revival, must have been unavoidable for the reply now to be accepted on petition.[2]

Delays in responding properly raise the question whether delays are unavoidable.[3] Where there is a question whether the delay was unavoidable, Petitioners must meet the burden of establishing that the delay was unavoidable within the meaning of 35 U.S.C. §133 and 37 C.F.R. §1.137(a).[4] And the Petitioner must be diligent in attending to the matter.[5] Failure to do so does not constitute the care required under Pratt, and so cannot satisfy the test for diligence and due care.

(By contrast, unintentional delays are those that do not satisfy the very strict statutory and

---

[1] 35 U.S.C. §133 provides:
35 U.S.C. §133 Time for prosecuting application.
Upon failure of the applicant to prosecute the application within six months after any action therein, of which notice has been given or mailed to the applicant, or within such shorter time, not less than thirty days, as fixed by the Commissioner in such action, the application shall be regarded as abandoned by the parties thereto, unless it be shown to the satisfaction of the Commissioner that such delay was unavoidable.

[2] Therefore, by example, an unavoidable delay in the payment of the Filing Fee might occur if a reply is shipped by the US Postal Service, but due to catastrophic accident, the delivery is not made.

[3] See: *Changes to Patent Practice and Procedure; Final Rule Notice*, 62 *Fed. Reg.* at 53158-59 (October 10, 1997), 1203 *Off. Gaz. Pat. Office* at 86-87 (October 21, 1997).

[4] See: In re Application of G, 11 USPQ2d 1378, 1380 (Comm'r Pats. 1989).

[5] See: Diligence in Filing Petitions to Revive and Petitions to Withdraw the Holding of Abandonment, 1124 Off. Gaz. Pat. Office 33 (March 19, 1991). It was and is Petitioner's burden to exercise diligence in seeking either to have the holding of abandonment withdrawn or the application revived. See 1124 Off. Gaz. Pat. Office supra.

regulatory requirements of unavoidable delay, and also, by definition, are not intentional.[6]))

The requirements for a grantable petition under 37 C.F.R. §1.137(b) are the petition and fee, a showing of unintentional delay, a proper reply, and–where appropriate--a terminal disclaimer and fee.

Petitioner has satisfied the petition, fee, reply and statement/showing requirements of the regulation.

CONCLUSION

The instant petition under 37 C.F.R. §1.137(b) hereby is **granted**.

The instant application is forwarded to Technology Center 3700 for further processing in due course.

Telephone inquiries concerning this decision may be directed to the undersigned at (571) 272-3214.

John J. Gillon, Jr.
Senior Attorney
Office of Petitions

[6] Therefore, by example, an unintentional delay in the reply might occur if the reply and transmittal form are to be prepared for shipment by the US Postal Service, but other pressing matters distract one's attention and the mail is not timely deposited for shipment.

UNITED STATES PATENT AND TRADEMARK OFFICE

Commissioner for Patents
United States Patent and Trademark Office
P.O. Box 1450
Alexandria, VA 22313-1450
www.uspto.gov

JOHN S ARTZ
ARTZ & ARTZ PC
28333 TELEGRAPH ROAD
SUITE 250
SOUTHFIELD MI 48034

COPY MAILED
FEB 01 2008
OFFICE OF PETITIONS

In re Application of	:	
David Morrow	:	
Application No. 10/154,128	:	ON PETITION
Filed: May 23, 2002	:	
Attorney Docket No. WLI 1070 R	:	

This is a decision on the petition to withdraw the holding of abandonment under 37 CFR 1.181, filed January 3, 2008.

The petition is **GRANTED**.

This application was held abandoned for failure to timely pay the issue fee in response to the Notice of Allowance, mailed February 21, 2007. This Notice set a statutory period for reply of three (3) months. No issue fee having been received, the application became abandoned on May 22, 2007. The Office mailed a Notice of Abandonment on August 21, 2007.

It is obvious from reviewing the file that the Notice of Allowance was mailed to the incorrect address. While the Notice was address to 2833 Telegraph Road, the Notice should have been addressed to the address set forth in the declaration filed with the application, or 28333 Telegraph Road.

In view thereof, **THE HOLDING OF ABANDONMENT IS WITHDRAWN.**

Receipt of the issue fee, submitted with the instant petition, is acknowledged.

The matter is being forwarded to the Office of Patent Publication for processing into a patent.

Telephone inquiries regarding this decision should be directed to the undersigned at (571)272-3207.

Cliff Congo

Cliff Congo
Petitions Attorney
Office of Petitions

UNITED STATES PATENT AND TRADEMARK OFFICE

Commissioner for Patents
United States Patent and Trademark Office
P.O. Box 1450
Alexandria, VA 22313-1450
www.uspto.gov

PHILIP S. JOHNSON
JOHNSON & JOHNSON
ONE JOHNSON & JOHNSON PLAZA
NEW BRUNSWICK NJ 08933-7003

COPY MAILED

AUG 2 5 2005

OFFICE OF PETITIONS

In re Application of :
Hammer et al. :
Application No. 10/154,136 : ON PETITION
Filed: May 22, 2002 :
Attorney Docket No. ETH1534 :

This is a decision on the petition under 37 C.F.R. § 1.137(b), filed August 15, 2005, to revive the above-identified application.

The petition is **DISMISSED**.

Any request for reconsideration must be submitted within TWO (2) MONTHS from the mail date of this decision. No further petition fee is required for the request. Extensions of time under 37 CFR 1.136(a) are permitted. The reconsideration request should include a cover letter entitled "Renewed Petition under 37 CFR 1.137(b)." This is **not** a final agency action within the meaning of 5 U.S.C. § 704.

This application became abandoned for failure to timely reply to the final Office action mailed December 2, 2004. No extensions of time under the provisions of 37 CFR 1.136(a) were obtained. Accordingly, this application became abandoned on March 3, 2005. A Notice of Abandonment was mailed June 17, 2005.

A grantable petition under 37 CFR 1.137(b) must be accompanied by:
(1) the required reply,[1]
(2) the petition fee,
(3) a statement that the entire delay in filing the required reply from the due date for the reply until the filing of a grantable petition pursuant to 37 CFR 1.137(b) was unintentional, and
(4) a terminal disclaimer and fee if the application was filed on or before June 8, 1995 or if the application is a design application.

Where there is a question as to whether either the abandonment or the delay in filing a petition under 37 CFR 1.137 was unintentional, the Commissioner may require additional information.[2]

---

[1] In a nonprovisional application abandoned for failure to prosecute, the required reply may be met by the filing of a continuing application. In an application or patent, abandoned or lapsed for failure to pay the issue fee or any portion thereof, the required reply must be the payment of the issue fee or any outstanding balance thereof.

[2] See MPEP 711.03(c)(III)(C) and (D).

The instant petition lacks item (1). Petitioner submitted an Appeal Brief, along with the requisite fee, with the instant petition. However, after a review of USPTO records, it does not appear that a Notice of Appeal has been submitted thus far. Accordingly, the Appeal Brief will be held in abeyance until the Notice of Appeal and requisite fee have been submitted.

Further correspondence with respect to this matter should be addressed as follows:

By mail:	Mail Stop PETITIONS Commissioner for Patents Post Office Box 1450 Alexandria, VA 22313-1450
By hand:	Customer Window located at: U.S. Patent and Trademark Office Customer Service Window Randolph Building 401 Dulany Street Alexandria, VA 22314
By fax:	(571) 273-8300 ATTN: Office of Petitions

Any questions concerning this matter may be directed to the undersigned at (571) 272-3206.

Liana Chase

Liana Chase
Petitions Examiner
Office of Petitions
Office of the Deputy Commissioner
for Patent Examination Policy

UNITED STATES PATENT AND TRADEMARK OFFICE

Commissioner for Patents
United States Patent and Trademark Office
P.O. Box 1450
Alexandria, VA 22313-1450
www.uspto.gov

PHILIP S. JOHNSON
JOHNSON & JOHNSON
ONE JOHNSON & JOHNSON PLAZA
NEW BRUNSWICK NJ 08933-7003

COPY MAILED

NOV 0 4 2005

OFFICE OF PETITIONS

In re Application of	:	
Hammer et al.	:	
Application No. 10/154,136	:	ON PETITION
Filed: May 22, 2002	:	
Attorney Docket No. ETH1534	:	

This is a decision on the renewed petition under 37 C.F.R. § 1.137(b), filed August 31, 2005, to revive the above-identified application.

The petition is **GRANTED.**

The petition satisfies the conditions for revival pursuant to the provisions of 37 CFR 1.137(b) in that (1) the reply in the form of a Notice of Appeal and fee; (2) the petition fee; and (3) the required statement of unintentional delay have been received. Accordingly, the response has been accepted as having been unintentionally delayed.

This matter is being referred to Technology Center 3700 for further processing.

Telephone inquiries regarding this decision should be directed to the undersigned at (571) 272-3282.

Liana Chase
Petitions Examiner
Office of Petitions

UNITED STATES PATENT AND TRADEMARK OFFICE

UNDER SECRETARY OF COMMERCE FOR INTELLECTUAL PROPERTY AND
DIRECTOR OF THE UNITED STATES PATENT AND TRADEMARK OFFICE
WASHINGTON, DC 20231
www.uspto.gov

MAILED

DEC 24 2002

DIRECTOR'S OFFICE
TECHNOLOGY CENTER 2100

Notaro and Michalos
100 Dutch Hill Road
Suite 110
Orangeburg, NY 10962-2100

In re application of
Herbert Cohen
Application No. 10/154,143
Filed: May 22, 2002
For: METHOD AND SYSTEM FOR INVESTING WITH A NO-LOSS OR LOW-LOSS ASSURANCE

DECISION ON PETITION TO MAKE SPECIAL (APPLICANT'S AGE)

This is a decision on the petition submitted on November 27, 2002, under 37 CFR 1.102 (c) to make the above-identified application special under the accelerated examination procedure set forth in MPEP 708.02, Section IV: Applicant's Age

The petition is **GRANTED**.

An application may be accorded special status upon the filing of a petition providing evidence showing that the applicant is at least 65 years old. Such a showing may be provided by evidence such as a birth certificate or a statement from the applicant.

The evidence submitted with the petition is a signed statement from the applicant stating that he is at least 65 years of age.

The examiner is directed (1) to make an interference search for possible interfering applications, (2) to promptly examine this application out of turn, and (3) if any interfering application is discovered, to examine such application simultaneously and state in the first official letter of such application that it is being taken out of turn because of a possible interference.

Petitioner is advised that this application will continue to be special, throughout its entire prosecution and pendency, including interference or appeal, if any, only if petitioner makes a prompt ***bona fide*** effort, in response to each Office action, to place the application in condition for allowance, even if it is necessary to conduct an interview with the examiner to accomplish this purpose.

SUMMARY: Petition to Make Special **GRANTED**.

Steven N. Meyers
Special Programs Examiner
Technology Center 3600
(703) 308-3868

snm: 12/19/02

UNITED STATES PATENT AND TRADEMARK OFFICE

Commissioner for Patents
United States Patent and Trademark Office
P.O. Box 1450
Alexandria, VA 22313-1450
www.uspto.gov

JOSEPH S. TRIPOLI
THOMSON MULTIMEDIA LICENSING INC.
2 INDEPENCENCE WAY
P.O. BOX 5312
PRINCETON NJ 08543-5312

COPY MAILED

APR 2 5 2005

OFFICE OF PETITIONS

In re Application of
Nijim
Application No. 10/154,147
Filed: May 22, 2002
Attorney Docket No. PU020112
For: TALKING E-BOOK

ON PETITION

This is a decision on the petition under 37 CFR 1.137(b), filed on January 27, 2005 (certificate of mailing date January 25, 2005), to revive the above-identified application.

Petitioner states that the above-identified application became abandoned as a result of petitioner's failure to file an appeal brief (and fee required by 37 CFR 1.17(c)) within the time period provided in 37 CFR 1.192(a). The time period provided in 37 CFR 1.192(a) is extendable under the provisions of 37 CFR 1.136(a). MPEP 1206 Therefore, when petitioner filed the instant petition with a general authorization to charge any additional fees during the pendency of the application, the Office had the authority to charge a one month extension of time fee and thus make the appeal brief timely filed.

The instant petition will be treated as a request for a one month extension of time. Therefore, the petition is **dismissed as moot** because the application is not abandoned. Regarding finances, deposit account no. 07-0832 will be charged a $120.00 one month extension of time fee. The $1,500.00 petition fee charged on January 31, 2005 will be credited to the same deposit account.

After the mailing of this decision the application will be forwarded to Technology Center A.U. 3714 for consideration of the appeal brief filed on January 27, 2005 (certificate of mailing date January 25, 2005).

Telephone inquiries pertaining to this decision may be directed to the undersigned at (571) 272-3230.

E. Shirene Willis

E. Shirene Willis
Senior Petitions Attorney
Office of Petitions

UNITED STATES PATENT AND TRADEMARK OFFICE

COMMISSIONER FOR PATENTS
UNITED STATES PATENT AND TRADEMARK OFFICE
P.O. BOX 1450
ALEXANDRIA, VA 22313-1450
www.uspto.gov

Paper No. 20

COPY MAILED

JUL 14 2003

OFFICE OF PETITIONS

CALFEE HALTER & GRISWOLD, LLP
800 SUPERIOR AVENUE
SUITE 1400
CLEVELAND, OH 44114

In re Application of
Nordstrom et al.
Application No. 10/154,154
Filed: May 23, 2002
Attorney Docket No. 22188-06512

ON PETITION

This is a decision on the petition under 37 CFR §1.137(a), filed June 16, 2003. This petition is being treated under 37 CFR 1.181 as a petition to withdraw the holding of abandonment.

The petition to withdraw the holding of abandonment is **GRANTED**.
The petition under 37 CFR 1.137(a) is **DISMISSED AS MOOT**.

This application became abandoned for failure to timely submit a response to the Notice to File Corrected Application Papers "Notice" mailed June 27, 2002. The Notice set an extendable 2 month period for reply. No extensions of time pursuant to 37 CFR 1.136(a) were obtained. Accordingly, this application was held abandoned on August 28, 2002. This decision precedes the mailing of Notice of Abandonment.

Petitioner asserts that the Notice to File Corrected Application Papers mailed on June 27, 2002 was never received. A review of the record indicates no irregularity in the mailing of the Notice, and in the absence of any irregularity in the mailing, there is a strong presumption that the Office action was properly mailed to the address of record. This presumption may be overcome by a showing that the Office action was not in fact received.

Accompanying the petition is a statement by the practitioner stating the Notice to File Corrected Application Papers was not received and attesting to the fact a review of docket records indicates the Notice to File Corrected Application Papers was not received. In addition, petitioner has provided a copy of docket records for the dates in question as well as the declaration of Tammy Bunch, Docket Clerk. Accordingly, petitioner has provided sufficient information to warrant the withdrawal of the holding of abandonment.

Deposit account 03-172 has been credited with the $110.00 petition fee submitted to revive the above-identified application.

This application is being forwarded to the Office of Initial Patent Examination for further processing.

Telephone inquiries concerning this matter should be directed to the undersigned at (703) 306-0251.

Charlema R. Grant

Charlema R. Grant
Petitions Attorney
Office of Petitions

UNITED STATES PATENT AND TRADEMARK OFFICE

COMMISSIONER FOR PATENTS
UNITED STATES PATENT AND TRADEMARK OFFICE
P.O. BOX 1450
ALEXANDRIA, VA 22313-1450
www.uspto.gov

Paper No. 10

Mr. Bruce Rose
Legere Pharmaceuticals, LTD
3123 Research Way, Suite 215
Carson City, NV 89706

COPY MAILED

NOV 13 2003

OFFICE OF PETITIONS

ON PETITION

In re Application of :
Michael J. Oldham et al. :
Application No. 10/154,156 :
Filed: May 24, 2002 :
Attorney Docket No. 44921-00006 :

This is a decision on the petition under 37 CFR 1.137(b), filed October 20, 2003, to revive the above-identified application.

The petition is Granted.

The above-identified application became abandoned for failure to reply in a timely manner to the non-final Office action mailed January 9, 2003, which set a shortened statutory period for reply of three months from the mail date of the Notice. No extensions of time under the provisions of 37 CFR 1.136 have been obtained. Accordingly, the application became abandoned on April 10, 2003.

There is no indication that the person signing the instant petition was ever given a power of attorney or authorization of agent to prosecute the above-identified application. However, in accordance with 37 CFR 1.34(a), the signature of Jean M. Dickman appearing on the petition shall constitute a representation to the United States Patent and Trademark Office that she is authorized to represent the particular party in whose behalf she acts. However, if Jean M. Dickman desires to receive future correspondence regarding this application, the appropriate power of attorney or authorization of agent must be submitted. A courtesy copy of this decision is being mailed to petitioner. Nevertheless, all future correspondence regarding this application file will be directed solely to the address of record until otherwise instructed.

The application file is being to Technology Center AU 1614 for further processing.

Telephone inquiries concerning this decision should be directed to Latrice Bond at (703) 308-6911.

Latrice Bond

Latrice Bond
Paralegal Specialist
Office of Petitions
Office of the Deputy Commissioner
for Patent Examination Policy

cc: Jean M. Dickman
One Kansas City Place
1200 Main Street
Kansas City, MO 64105-2118

UNITED STATES PATENT AND TRADEMARK OFFICE

Commissioner for Patents
United States Patent and Trademark Office
P.O. Box 1450
Alexandria, VA 22313-1450
www.uspto.gov

MAY 13 2005

Roger C. Turner
Suite 306
280 Cagney Ln
Newport beach, CA 92663

In re Application of Harry H. Arzouman Serial No. : 10/154,164 Filed : May 23, 2002 For : A Lift Arm assembly for Use with a Power Unit and Lift Bridge	DECISION ON PETITION TO WITHDRAW HOLDING OF ABANDONMENT

This is a decision on petitioner's request filed June 17, 2004, to review a holding of abandonment for failure to respond to the Office action mailed September 12, 2003. No Notice of Abandonment has been mailed in the instant application. There is no fee required for this petition.

In support of the request, petitioner has provided a statement that on October 28, 2003, a response to the Office action mailed September 12, 2003 was filed in accordance with the procedures set forth in 37 CFR 1.8. The communication included a Certificate of First Class Mailing dated October 28, 2003. A copy of the October 28, 2003 communication has been provided.

In view of the above, the holding of abandonment is withdrawn. Upon the mailing of this decision, the application will be forwarded to the Examiner via the Legal Instruments Examiner for entry, processing and consideration of the communication mailed October 28, 2003.

Summary: Holding of Abandonment Withdrawn.

Richard A. Bertsch

Richard A. Bertsch, Director
Technology Center 3700
Phone: (571) 272-3750

ak/05/12/05

UNITED STATES PATENT AND TRADEMARK OFFICE

Commissioner for Patents
United States Patent and Trademark Office
P.O. Box 1450
Alexandria, VA 22313-1450
www.uspto.gov

CATERPILLAR INC.
100 N.E. ADAMS STREET
PATENT DEPT.
PEORIA, IL 61629-6490

COPY MAILED

MAY 2 4 2005

OFFICE OF PETITIONS

In re Application of
Smith et al.
Application No. 10/154,199
Filed: May 22, 2002
Attorney Docket No. 01-571

ON PETITION

This is a decision on the petition under 37 C.F.R. § 1.137(b), filed February 28, 2005, to revive the above-identified application.

The petition is **GRANTED.**

The above-identified application became abandoned for failure to reply in a timely manner to the restriction requirement mailed June 17, 2004, which set a shortened statutory period for reply of one (1) month. No extensions of time under the provisions of 37 CFR 1.136(a) were timely obtained. Accordingly, the above-identified application became abandoned on July 18, 2004. A Notice of Abandonment was mailed January 27, 2005.

Petitioner has met the requirements to revive the above-identified application pursuant to 37 CFR 1.137(b).

An extension of time under 37 CFR 1.136 must be filed prior to the expiration of the maximum extendable period for reply. See In re Application of S., 8 USPQ2d 1630, 1631 (Comm'r Pats. 1988). Accordingly, since the $2160.00 extension of time fee submitted with the petition on February 28, 2005 was subsequent to the maximum extendable period for reply, this fee is unnecessary and will be credited to petitioner's deposit account as authorized.

This matter is being referred to Technology Center 1700 for further examination on the merits.

Telephone inquiries regarding this decision should be directed to the undersigned at (571) 272-3282.

Liana Chase
Petitions Examiner
Office of Petitions
Office of the Deputy Commissioner
for Patent Examination Policy

Under the Paperwork Reduction Act of 1995, no persons are required to respond to a collection of information unless it displays valid OMB control number.

PETITION TO ACCEPT UNINTENTIONALLY DELAYED PAYMENT OF MAINTENANCE FEE IN AN EXPIRED PATENT (37 CFR 1.378(c))

Patent Number	Issue Date (YYYY-MM-DD)	Application Number	Filing Date (YYYY-MM-DD)	Docket Number (if applicable)
6715409	2004-04-06	10/154,211	2002-05-22	M-188

CAUTION: Maintenance fee (and surcharge, if any) payment must correctly identify: (1) the patent number and (2) the application number of the actual U.S. application leading to issuance of that patent to ensure the fee(s) is/are associated with the correct patent. 37 CFR 1.366(c) and (d).

SMALL ENTITY
☒ Patentee claims, or has previously claimed, small entity status. See 37 CFR 1.27.

LOSS OF ENTITLEMENT TO SMALL ENTITY STATUS
☐ Patentee is no longer entitled to small entity status. See 37 CFR 1.27(g)

NOT Small Entity			Small Entity		
	Fee	Code		Fee	Code
○	3 ½ year	(1551)	◉	3 ½ year	(2551)
○	7 ½ year	(1552)	○	7 ½ year	(2552)
○	11 ½ year	(1553)	○	11 ½ year	(2553)

SURCHARGE
The surcharge required by 37 CFR 1.20(i)(2) (Fee Code 1558) must be paid as a condition of accepting unintentionally delayed payment of the maintenance fee.

MAINTENANCE FEE (37 CFR 1.20(e)-(g))
The appropriate maintenance fee must be submitted with this petition.

STATEMENT
THE UNDERSIGNED CERTIFIES THAT THE DELAY IN PAYMENT OF THE MAINTENANCE FEE TO THIS PATENT WAS UNINTENTIONAL

PETITIONER(S) REQUEST THAT THE DELAYED PAYMENT OF THE MAINTENANCE FEE BE ACCEPTED AND THE PATENT REINSTATED

THIS PORTION MUST BE COMPLETED BY THE SIGNATORY OR SIGNATORIES

37 CFR 1.378(d) states: "Any petition under this section must be signed by an attorney or agent registered to practice before the Patent and Trademark Office, or by the patentee, the assignee, or other party in interest."

I certify, in accordance with 37 CFR 1.4(d)(4) that I am

◉ An attorney or agent registered to practice before the Patent and Trademark Office

○ A sole patentee

○ A joint patentee; I certify that I am authorized to sign this submission on behalf of all the other patentees.

○ A joint patentee; all of whom are signing this e-petition

○ The assignee of record of the entire interest

Patent Practitioner			
A signature of the applicant or representative is required in accordance with 37 CFR 1.33 and 10.18. Please see 37 CFR 1.4(d) for the form of the signature			
Signature	/Victor F. Lohmann, III/	Date (YYYY-MM-DD)	
Name	Victor F. Lohmann, III	Registration Number	33951

This collection of information is required by 37 CFR 1.378(c). The information is required to obtain or retain a benefit by the public which is to file (and by the USPTO to process) an application. Confidentiality is governed by 35 U.S.C. 122 and 37 CFR 1.11 and 1.14. This collection is estimated to take 1 hour to complete, including gathering, preparing, and submitting the completed application form to the USPTO. Time will vary depending upon the individual case. Any comments on the amount of time you require to complete this form and/or suggestions for reducing this burden, should be sent to the Chief Information Officer, U.S. Patent and Trademark Office, U.S. Department of Commerce, P.O. Box 1450, Alexandria, VA 22313-1450. DO NOT SEND FEES OR COMPLETED FORMS TO THIS ADDRESS. **This form can only be used when in conjunction with EFS-Web. If this form is mailed to the USPTO, it may cause delays in reinstating the patent.**

Privacy Act Statement

The Privacy Act of 1974 (P.L. 93-579) requires that you be given certain information in connection with your submission of the attached form related to a patent application or patent. Accordingly, pursuant to the requirements of the Act, please be advised that: (1) the general authority for the collection of this information is 35 U.S.C. 2(b)(2); (2) furnishing of the information solicited is voluntary; and (3) the principal purpose for which the information is used by the U.S. Patent and Trademark Office is to process and/or examine your submission related to a patent application or patent. If you do not furnish the requested information, the U.S. Patent and Trademark Office may not be able to process and/or examine your submission, which may result in termination of proceedings or abandonment of the application or expiration of the patent.

The information provided by you in this form will be subject to the following routine uses:

1. The information on this form will be treated confidentially to the extent allowed under the Freedom of Information Act (5 U.S.C. 552) and the Privacy Act (5 U.S.C. 552a). Records from this system of records may be disclosed to the Department of Justice to determine whether the Freedom of Information Act requires disclosure of these record s.

2. A record from this system of records may be disclosed, as a routine use, in the course of presenting evidence to a court, magistrate, or administrative tribunal, including disclosures to opposing counsel in the course of settlement negotiations.

3. A record in this system of records may be disclosed, as a routine use, to a Member of Congress submitting a request involving an individual, to whom the record pertains, when the individual has requested assistance from the Member with respect to the subject matter of the record.

4. A record in this system of records may be disclosed, as a routine use, to a contractor of the Agency having need for the information in order to perform a contract. Recipients of information shall be required to comply with the requirements of the Privacy Act of 1974, as amended, pursuant to 5 U.S.C. 552a(m).

5. A record related to an International Application filed under the Patent Cooperation Treaty in this system of records may be disclosed, as a routine use, to the International Bureau of the World Intellectual Property Organization, pursuant to the Patent Cooperation Treaty.

6. A record in this system of records may be disclosed, as a routine use, to another federal agency for purposes of National Security review (35 U.S.C. 181) and for review pursuant to the Atomic Energy Act (42 U.S.C. 218(c)).

7. A record from this system of records may be disclosed, as a routine use, to the Administrator, General Services, or his/her designee, during an inspection of records conducted by GSA as part of that agency's responsibility to recommend improvements in records management practices and programs, under authority of 44 U.S.C. 2904 and 2906. Such disclosure shall be made in accordance with the GSA regulations governing inspection of records for this purpose, and any other relevant (i.e., GSA or Commerce) directive. Such disclosure shall not be used to make determinations about individuals.

8. A record from this system of records may be disclosed, as a routine use, to the public after either publication of the application pursuant to 35 U.S.C. 122(b) or issuance of a patent pursuant to 35 U.S.C. 151. Further, a record may be disclosed, subject to the limitations of 37 CFR 1.14, as a routine use, to the public if the record was filed in an application which became abandoned or in which the proceedings were terminated and which application is referenced by either a published application, an application open to public inspections or an issued patent.

9. A record from this system of records may be disclosed, as a routine use, to a Federal, State, or local law enforcement agency, if the USPTO becomes aware of a violation or potential violation of law or regulation.

UNITED STATES PATENT AND TRADEMARK OFFICE

Commissioner for Patents
United States Patent and Trademark Office
P.O. Box 1450
Alexandria, VA 22313-1450
www.uspto.gov

In re Patent No. 6715409
Issue Date: April 6,2004
Application No. 10154211
Filed: May 22,2002
Attorney Docket No. M-188

:
:DECISION GRANTING PETITION
:UNDER 37 CFR 1.378(c)
:

This is a decision on the electronic petition, filed July 21,2008 ,under 37 CFR 1.378(c) to accept the unintentionally delayed payment of the 3.5 year maintenance fee for the above-identified patent.

The petition is GRANTED.

The maintenance fee is accepted, and the above-identified patent reinstated as of July 21,2008 . This decision also constitutes notice that the fee has been accepted. An electronic copy of the petition and this decision has been created as an entry in an Image File Wrapper. Nevertheless, petitioner should print and retain an independent copy

Telephone inquires related to this electronic decision should be directed to the Electronic Business Center at 1-866-217-9197.

Approved for use through 04/30/2009. OMB 0651-0016
U.S. Patent and Trademark Office: U.S. DEPARTMENT OF COMMERCE
Under the Paperwork Reduction Act of 1995, no persons are required to respond to a collection of information unless it displays valid OMB control number.

PETITION TO ACCEPT UNINTENTIONALLY DELAYED PAYMENT OF MAINTENANCE FEE IN AN EXPIRED PATENT (37 CFR 1.378(c))

Patent Number	Issue Date (YYYY-MM-DD)	Application Number	Filing Date (YYYY-MM-DD)	Docket Number (if applicable)
6623328	2003-09-23	10154217	2002-05-20	83359.0001

CAUTION: Maintenance fee (and surcharge, if any) payment must correctly identify: (1) the patent number and (2) the application number of the actual U.S. application leading to issuance of that patent to ensure the fee(s) is/are associated with the correct patent. 37 CFR 1.366(c) and (d).

SMALL ENTITY
☒ Patentee claims, or has previously claimed, small entity status. See 37 CFR 1.27.

LOSS OF ENTITLEMENT TO SMALL ENTITY STATUS
☐ Patentee is no longer entitled to small entity status. See 37 CFR 1.27(g)

NOT Small Entity		Small Entity	
Fee	Code	Fee	Code
○ 3 ½ year	(1551)	◉ 3 ½ year	(2551)
○ 7 ½ year	(1552)	○ 7 ½ year	(2552)
○ 11 ½ year	(1553)	○ 11 ½ year	(2553)

SURCHARGE
The surcharge required by 37 CFR 1.20(i)(2) (Fee Code 1558) must be paid as a condition of accepting unintentionally delayed payment of the maintenance fee.

MAINTENANCE FEE (37 CFR 1.20(e)-(g))
The appropriate maintenance fee must be submitted with this petition.

STATEMENT
THE UNDERSIGNED CERTIFIES THAT THE DELAY IN PAYMENT OF THE MAINTENANCE FEE TO THIS PATENT WAS UNINTENTIONAL

PETITIONER(S) REQUEST THAT THE DELAYED PAYMENT OF THE MAINTENANCE FEE BE ACCEPTED AND THE PATENT REINSTATED

THIS PORTION MUST BE COMPLETED BY THE SIGNATORY OR SIGNATORIES

37 CFR 1.378(d) states: "Any petition under this section must be signed by an attorney or agent registered to practice before the Patent and Trademark Office, or by the patentee, the assignee, or other party in interest."

I certify, in accordance with 37 CFR 1.4(d)(4) that I am

◉ An attorney or agent registered to practice before the Patent and Trademark Office

○ A sole patentee

○ A joint patentee; I certify that I am authorized to sign this submission on behalf of all the other patentees.

○ A joint patentee; all of whom are signing this e-petition

○ The assignee of record of the entire interest

Patent Practitioner			
A signature of the applicant or representative is required in accordance with 37 CFR 1.33 and 10.18. Please see 37 CFR 1.4(d) for the form of the signature			
Signature	/Brooke W. Quist/	Date (YYYY-MM-DD)	2007-11-19
Name	Brooke W. Quist	Registration Number	45030

This collection of information is required by 37 CFR 1.378(c). The information is required to obtain or retain a benefit by the public which is to file (and by the USPTO to process) an application. Confidentiality is governed by 35 U.S.C. 122 and 37 CFR 1.11 and 1.14. This collection is estimated to take 1 hour to complete, including gathering, preparing, and submitting the completed application form to the USPTO. Time will vary depending upon the individual case. Any comments on the amount of time you require to complete this form and/ or suggestions for reducing this burden, should be sent to the Chief Information Officer, U.S. Patent and Trademark Office, U.S. Department of Commerce, P.O. Box 1450, Alexandria, VA 22313-1450. DO NOT SEND FEES OR COMPLETED FORMS TO THIS ADDRESS. **This form can only be used when in conjunction with EFS-Web. If this form is mailed to the USPTO, it may cause delays in reinstating the patent.**

Privacy Act Statement

The Privacy Act of 1974 (P.L. 93-579) requires that you be given certain information in connection with your submission of the attached form related to a patent application or patent. Accordingly, pursuant to the requirements of the Act, please be advised that: (1) the general authority for the collection of this information is 35 U.S.C. 2(b)(2); (2) furnishing of the information solicited is voluntary; and (3) the principal purpose for which the information is used by the U.S. Patent and Trademark Office is to process and/or examine your submission related to a patent application or patent. If you do not furnish the requested information, the U.S. Patent and Trademark Office may not be able to process and/or examine your submission, which may result in termination of proceedings or abandonment of the application or expiration of the patent.

The information provided by you in this form will be subject to the following routine uses:

1. The information on this form will be treated confidentially to the extent allowed under the Freedom of Information Act (5 U.S.C. 552) and the Privacy Act (5 U.S.C. 552a). Records from this system of records may be disclosed to the Department of Justice to determine whether the Freedom of Information Act requires disclosure of these record s.

2. A record from this system of records may be disclosed, as a routine use, in the course of presenting evidence to a court, magistrate, or administrative tribunal, including disclosures to opposing counsel in the course of settlement negotiations.

3. A record in this system of records may be disclosed, as a routine use, to a Member of Congress submitting a request involving an individual, to whom the record pertains, when the individual has requested assistance from the Member with respect to the subject matter of the record.

4. A record in this system of records may be disclosed, as a routine use, to a contractor of the Agency having need for the information in order to perform a contract. Recipients of information shall be required to comply with the requirements of the Privacy Act of 1974, as amended, pursuant to 5 U.S.C. 552a(m).

5. A record related to an International Application filed under the Patent Cooperation Treaty in this system of records may be disclosed, as a routine use, to the International Bureau of the World Intellectual Property Organization, pursuant to the Patent Cooperation Treaty.

6. A record in this system of records may be disclosed, as a routine use, to another federal agency for purposes of National Security review (35 U.S.C. 181) and for review pursuant to the Atomic Energy Act (42 U.S.C. 218(c)).

7. A record from this system of records may be disclosed, as a routine use, to the Administrator, General Services, or his/her designee, during an inspection of records conducted by GSA as part of that agency's responsibility to recommend improvements in records management practices and programs, under authority of 44 U.S.C. 2904 and 2906. Such disclosure shall be made in accordance with the GSA regulations governing inspection of records for this purpose, and any other relevant (i.e., GSA or Commerce) directive. Such disclosure shall not be used to make determinations about individuals.

8. A record from this system of records may be disclosed, as a routine use, to the public after either publication of the application pursuant to 35 U.S.C. 122(b) or issuance of a patent pursuant to 35 U.S.C. 151. Further, a record may be disclosed, subject to the limitations of 37 CFR 1.14, as a routine use, to the public if the record was filed in an application which became abandoned or in which the proceedings were terminated and which application is referenced by either a published application, an application open to public inspections or an issued patent.

9. A record from this system of records may be disclosed, as a routine use, to a Federal, State, or local law enforcement agency, if the USPTO becomes aware of a violation or potential violation of law or regulation.

UNITED STATES PATENT AND TRADEMARK OFFICE

Commissioner for Patents
United States Patent and Trademark Office
P.O. Box 1450
Alexandria, VA 22313-1450
www.uspto.gov

In re Patent No. 6623328
Issue Date: September 23,2003
Application No. 10154217
Filed: May 20,2002
Attorney Docket No. 83359.0001

:

:DECISION GRANTING PETITION
:UNDER 37 CFR 1.378(c)

:

This is a decision on the electronic petition, filed November 19,2007 ,under 37 CFR 1.378(c) to accept the unintentionally delayed payment of the 3.5 year maintenance fee for the above-identified patent.

The petition is GRANTED.

The maintenance fee is accepted, and the above-identified patent reinstated as of November 19,2007. This decision also constitutes notice that the fee has been accepted. An electronic copy of the petition and this decision has been created as an entry in an Image File Wrapper. Nevertheless, petitioner should print and retain an independent copy

Telephone inquires related to this electronic decision should be directed to the Electronic Business Center at 1-866-217-9197.

UNITED STATES PATENT AND TRADEMARK OFFICE

COMMISSIONER FOR PATENTS
UNITED STATES PATENT AND TRADEMARK OFFICE
P.O. BOX 1450
ALEXANDRIA, VA 22313-1450
www.uspto.gov

COPY MAILED

SEP 17 2007

OFFICE OF PETITIONS

DAY PITNEY LLP
7 TIMES SQUARE
NEW YORK NY 10036-7311

In re Application of :
Schneider : DECISION ON PETITION
Application No. 10/154,221 :
Filed: May 23, 2002 :
Atty. Dkt. No.: 769-314 :

This is a decision on the petition under 37 CFR 1.137(b), filed November 13, 2006, to revive the above-identified application.

The petition is **GRANTED**.

This application became abandoned for failure to submit a terminal disclaimer following the decision by the Board of Patent Appeals and Interferences mailed August 10, 2006. Notice of Abandonment was mailed October 24, 2006.

A grantable petition pursuant to 37 C.F.R. § 1.137(b) must be accompanied by: (1) the required reply to the outstanding Office action or notice, unless previously filed; (2) the petition fee as set forth in 37 C.F.R. § 1.17(m); (3) a statement that the entire delay in filing the required reply from the due date for the reply until the filing of a grantable petition pursuant to 37 C.F.R. § 1.137(b) was unintentional; and (4)any terminal disclaimer (and fee set forth in 37 C.F.R. § 1.20(d)) required pursuant to 37 C.F.R. § 1.137(c).

The instant petition has been reviewed and found in compliance with the provisions of 37 CFR 1.137(b). Accordingly, the failure to timely submit a proper reply to the final Office action is accepted as having been unintentionally delayed.

This application will be forwarded to Technology Center 3700 for further processing.

Telephone inquiries concerning this matter may be directed to the undersigned at (571) 272-3205.

Alesia M. Brown
Petitions Attorney
Office of Petitions

UNITED STATES PATENT AND TRADEMARK OFFICE

Commissioner for Patents
United States Patent and Trademark Office
P.O. Box 1450
Alexandria, VA 22313-1450
www.uspto.gov

August 21, 2006

FILE COPY

Patent No. : 6,790,476 B1
Ser. No. : 10/154224
Inventor(s) : Jennison, et al.
Issued : September 14, 2004
Title : **METHOD OF ADHESION BETWEEN AN OXIDE LAYER AND A METAL LAYER**
Docket No. : **SD7049/S98610**

Re: Request for Certificate of Correction

Consideration has been given your request for the issuance of a certificate of correction for the above-identified patent under the provisions of Rule(s) 1.322 and/or 1.323.

Assignees' names and addresses (assignment data) printed in a patent, are based *solely* on information supplied in the appropriate space for identifying the assignment data, i.e., item 3 of the Issue Fee Transmittal Form PTOL-85B. Granting of a request under 37 CFR 3.81(b) is required to correct applicant's error providing ***incorrect or erroneous*** assignment data, *before* issuance of a Certificate of Correction, under 37 CFR 1.323 *(see Manual of Patent Examining Procedures (M.P.E.P) Chp.1400, sect. 1481).* This procedure is required *at any time after the issue fee is paid*, including after issuance of the patent.

In view of the foregoing, your request, in this mater, is hereby denied.

A request to correct the Assignee under 37 CFR 3.81(b) should include:

A. **the processing fee set forth in 37 CFR 1.117(h) (currently $130);**
B. a statement that the failure to include the correct assignee name on the PTOL-85B was inadvertent; and
C. a copy of the Notice of Recordation of Assignment Document, reflecting the reel and frame number where the assignment(s) is recorded and/or reflecting proof of *the date* the assignment was submitted for recordation.

In the Request, Applicant(s) may request that the file be forwarded to Certificates of Correction Branch, for issuance of a Certificate of Correction, if the Request is granted.

Any request under 37 CFR 3.81(b) should be directed to the following address or facsimile number:

By mail: Mail Stop PETITIONS
Commissioner for Patents
Post Office Box 1450
Alexandria, VA 22313-1450

By hand: Customer Service Window
Mail Stop Petitions
Randolph Building
401 Dulany Street
Alexandria, VA 22314

By fax: (571) 273-8300
ATTN: Office of Petitions

If a fee (currently $100) was previously submitted for consideration of a Request for Certificate of Correction, under CFR 1.323, to correct assignment data, , no additional fee is required.

Elisha Evans
For Cecelia Newman
Decisions & Certificates
of Correction Branch
(703) **308-9390 ext. 110** or (703) 308-8309

SANDIA CORPORATION
P O BOX 5800
MS-0161
ALBUQUERQUE NM 87185-0161

CBN/eme

UNITED STATES PATENT AND TRADEMARK OFFICE

COMMISSIONER FOR PATENTS
UNITED STATES PATENT AND TRADEMARK OFFICE
P.O. BOX 1450
ALEXANDRIA, VA 22313-1450
www.uspto.go

Paper No.

James P. Delaney
Jansson, Shupe & Munger, Ltd.
Suite M
245 Main Street
Racine, WI 53403

COPY MAILED

FEB 13 2004

OFFICE OF PETITIONS

In re Application of :
Peterson et al. :
Application No. 10/154,225 :
Filed: May 23, 2002 :
Attorney Docket No. :
PET-101US :

This is a decision on the petition filed November 21, 2003, pursuant to 37 C.F.R. §3.81(b), to request a change in the name of the assignee after payment of the issue fee. The delay in treating this petition is regretted.

The petition is **dismissed as moot**.

The petition requests that the name Salvatore M. D'Acquisito appear as the assignee on the issued patent.

Unfortunately, the petition did not reach the appropriate deciding official until after the patent issued and the assignment data could not be printed on the patent. As such, petitioner may request a Certificate of Correction under 37 CFR 1.323.

The assignment and cover sheet have been forwarded to the assignment division for entry of the assignment. Deposit account 10-0270 has been charged the fee for recording the patent assignment, $40.00.

The $130.00 petition fee has been refunded to deposit account 10-0270, as authorized in the present petition.

The application is being forwarded to the Files Repository.

Telephone inquiries concerning this matter should be directed to the undersigned at (703) 305-0014.

Derek L. Woods
Petitions Attorney
Office of Petitions

UNITED STATES PATENT & TRADEMARK OFFICE
Washington, D.C. 20231

REQUEST FOR PATENT FEE REFUND

1 Date of Request: 2/11/04

2 Serial/Patent # 10/154,225

	3 Please refund the following fee(s):	4 PAPER NUMBER	5 DATE FILED	6 AMOUNT
	Filing			$
	Amendment			$
	Extension of Time			$
	Notice of Appeal/Appeal			$
X	Petition	N/a	11/21/03	$ 130.00
	Issue			$
	Cert of Correction/Terminal Disc.			$
	Maintenance			$
	Assignment			$
	Other			$

7 TOTAL AMOUNT OF REFUND $

8 TO BE REFUNDED BY:

	Treasury Check
X	Credit Deposit A/C #:

9 1 0 -- 0 2 7 0

10 REASON:

	Overpayment
	Duplicate Payment
X	No Fee Due (Explanation):

Petition moot

11 REFUND REQUESTED BY:

TYPED/PRINTED NAME: Derek L. Woods TITLE: Attorney

SIGNATURE: Derek L Woods PHONE: 305-0014

OFFICE: Petitions

****

THIS SPACE RESERVED FOR FINANCE USE ONLY:

APPROVED: [illegible] DATE: 2/15/04

Instructions for completion of this form appear on the back. After completion, attach white and yellow copies to the official file and mail or hand-carry to:

Office of Finance
Refund Branch
Crystal Park One, Room 802B

FORM PTO 1577
(01/90)

OIPE
NOV 21 2003
PATENT & TRADEMARK OFFICE

IN THE UNITED STATES PATENT AND TRADEMARK OFFICE

In re U.S. Patent Application of:)
)
Peterson et al.)
)
Serial No.: 10/154,225)
)
Title: ADJUSTABLE GAME)
CONTROLLER MOUNT)

MAIL STOP ISSUE FEE
Commissioner for Patents
P.O. Box 1450
Alexandria, VA 22313-1450

PETITION

Dear Sir or Madam:

On October 16, 2003, the issue fee was timely filed for the above application. After a review of the file, it was noted that the assignment was never recorded. Enclosed is a copy of the Assignment and Recordation Cover Sheet which was sent to the Assignment Division on this day.

Therefore, applicants request that the U.S. Patent & Trademark Office name Salvatore M. D'Acquisto as the assignee on the issued patent. Please debit our account 10-0270 in the amount of $130 for this petition. The Commissioner is invited to contact the undersigned if there are any questions with respect to this petition.

Adjustment date: 02/13/2004 AKELLEY
11/28/2003 TBESHAH2 00000206 100270 10154225
01 FC:1460 130.00 CR

11/28/2003 TBESHAH2 00000206 100270 10154225
01 FC:1460 130.00 DA

Respectfully Submitted,

James P. Delaney
Reg. No. 45,578

Jansson, Shupe & Munger, Ltd.
245 Main Street
Racine, WI 53403
(262) 632-6900 (262) 632-2257- fax
Attorney Docket No.: PET-101US

EXPRESS LABEL NO. EV 339301512US
I hereby certify that this correspondence is being deposited with the United States Postal Service as EXPRESS MAIL in an envelope addressed to: Mail Stop Issue Fee COMMISSIONER FOR PATENTS, P.O. Box 1450, Alexandria, VA 22313-1450 on 11/21/03.

Name: Terasa Johnson
Terasa Johnson 11/21/03
Signature Date

UNITED STATES PATENT AND TRADEMARK OFFICE

Commissioner for Patents
United States Patent and Trademark Office
P.O. Box 1450
Alexandria, VA 22313-1450
www.uspto.gov

R. Lewis Gable, Esq.
Cowan, Liebowitz & Latman, P.C.
1133 Avenue of the Americas
New York NY 10036

COPY MAILED
MAY 16 2006
OFFICE OF PETITIONS

In re Application of	:	
CAMPBELL, RONALD G. et al	:	
Application No. 10/154,250	:	DECISION ON PETITION
Filed: May 23, 2002	:	TO WITHDRAW
Attorney Docket No. 24426.02	:	FROM RECORD

This is a decision on the Request to Withdraw as attorney or agent of record under 37 C.F.R. § 1.36(b), filed August 1, 2005.

The request is **NOT APPROVED**.

On August 1, 2005, R. Lewis Gable #22,479 requests to withdraw as attorney in the instant application. However, a review of the file record indicates a new power of attorney and revocation was filed on October 7, 2005 appointing customer number 32137 and R. Lewis Gable to prosecute the application. This customer number includes the same attorney R. Lewis Gable trying to withdraw from the application. Accordingly, the request under 37 C.F.R. § 1.136(b) to withdraw as attorneys/agents cannot be granted as this time until further information has been submitted to the Office clarifying the power of attorney situation on this application.

All future communications from the Office will continue to be directed to the above-listed address until otherwise notified by applicant.

There is an outstanding Office action mailed November 10, 2005 that requires a reply from the applicant.

Telephone inquires concerning this decision should be directed to Amelia Au at 571-272- 7414.

Amelia Au
Petitions Examiner
Office of Petitions

cc: Mr. Farhad Geranmayeh
ISM Fastening Systems
629 East Butler Road
Butler, PA 16001

UNITED STATES PATENT AND TRADEMARK OFFICE

COMMISSIONER FOR PATENTS
UNITED STATES PATENT AND TRADEMARK OFFICE
P.O. BOX 1450
ALEXANDRIA, VA 22313-1450
WWW.USPTO.GOV

Paper No. None

COPY MAILED

JUL 17 2006

OFFICE OF PETITIONS

MOETTELI & ASSOCIATES SARL
ST. LEONHARDSTRASSE 4
ST. GALLEN CH-90-00 CH SWITZERLAND

In re Application of :
Konstantinos Spartiotis et al. :
Application No. 10/154,264 : DECISION ON PETITION
Filed: May 23, 2002 : UNDER 37 C.F.R. §1.181(A)
Attorney Docket Number: AJAT- :
186R :
Title: RADIATION IMAGING DEVICE :
AND SYSTEM :

This is a decision on the petition filed January 12, 2006, to "withdraw final rejection and/or reset period for reply," which is properly treated as a petition under 37 C.F.R. §1.181(a) to withdraw the holding of abandonment. A duplicate of this petition was submitted on May 3, 2006.

Background

The above-identified application became abandoned for failure to reply within the meaning of 37 C.F.R. §1.113 in a timely manner to the final Office action mailed May 18, 2005, which set a shortened statutory period for reply of three months. An after-final amendment was received on September 16, 2005 along with a one-month extension of time, and an advisory action was mailed on November 14, 2005. No further extensions of time under the provisions of 37 C.F.R. §1.136(a) were available, and no further responses were received. Accordingly, the above-identified application became abandoned on September 19, 2005. A notice of abandonment was mailed on April 20, 2006.

It is noted that the Office Action Summary which was mailed with the Final Rejection contains a typographical error, in that it is indicated that the action was non-final. The Office regrets this error.

With the present petition pursuant to 37 C.F.R. §1.181(a), Petitioner has alleged that since the Office Action Summary contains a typographical error, the Office Action of May 18, 2005 was not a final Office action. A discussion follows.

The Relevant Law, Regulations, and Portion of the MPEP

35 U.S.C. 133: Time for prosecuting application.

Upon failure of the applicant to prosecute the application within six months after any action therein, of which notice has been given or mailed to the applicant, or within such shorter time, not less than thirty days, as fixed by the Director in such action, the application shall be regarded as abandoned by the parties thereto, unless it be shown to the satisfaction of the Director that such delay was unavoidable.

(Amended Nov. 29, 1999, Public Law 106-113, sec. 1000(a)(9), 113 Stat. 1501A-582 (S. 1948 sec. 4732(a)(10)(A)).)

37 C.F.R. §1.2: Business to be transacted in writing.

All business with the Patent and Trademark Office should be transacted in writing. The personal attendance of applicants or their attorneys or agents at the Patent and Trademark Office is unnecessary. The action of the Patent and Trademark Office will be based exclusively on the written record in the Office. No attention will be paid to any alleged oral promise, stipulation, or understanding in relation to which there is disagreement or doubt.

37 C.F.R. §1.113 Final rejection or action.

(a) On the second or any subsequent examination or consideration by the examiner the rejection or other action may be made final, whereupon applicant's, or for ex parte reexaminations filed under § 1.510, patent owner's reply is limited to appeal in the case of rejection of any claim (§ 41.31 of this title), or to amendment as specified in § 1.114 or § 1.116. Petition may be taken to the Director in the case of objections or requirements not involved in the rejection of any claim (§ 1.181). Reply to a final rejection or action must comply with § 1.114 or paragraph (c) of this section. For final actions in an inter partes reexamination filed under § 1.913, see § 1.953.

(b) In making such final rejection, the examiner shall repeat or state all grounds of rejection then considered applicable to the claims in the application, clearly stating the reasons in support thereof.

(c) Reply to a final rejection or action must include cancellation of, or appeal from the rejection of, each rejected claim. If any claim stands allowed, the reply to a final rejection or action must comply with any requirements or objections as to form.

[24 FR 10332, Dec. 22, 1959; 46 FR 29182, May 29, 1981; revised, 62 FR 53131, Oct. 10, 1997, effective Dec. 1, 1997; revised, 65 FR 14865, Mar.

[24 FR 10332, Dec. 22, 1959; 46 FR 29182, May 29, 1981; revised, 62 FR 53131, Oct. 10, 1997, effective Dec. 1, 1997; revised, 65 FR 14865, Mar. 20, 2000, effective May 29, 2000 (adopted as final, 65 FR 50092, Aug. 16, 2000); para. (a) revised, 65 FR 76756, Dec. 7, 2000, effective Feb. 5, 2001; para. (a) revised, 68 FR 14332, Mar. 25, 2003, effective May 1, 2003; para. (a) revised, 69 FR 49959, Aug. 12, 2004, effective Sept. 13, 2004]

§ 1.135: Abandonment for failure to reply within time period.

(a) If an applicant of a patent application fails to reply within the time period provided under § 1.134 and § 1.136, the application will become abandoned unless an Office action indicates otherwise.

(b) Prosecution of an application to save it from abandonment pursuant to paragraph (a) of this section must include such complete and proper reply as the condition of the application may require. The admission of, or refusal to admit, any amendment after final rejection or any amendment not responsive to the last action, or any related proceedings, will not operate to save the application from abandonment.

(c) When reply by the applicant is a bona fide attempt to advance the application to final action, and is substantially a complete reply to the non-final Office action, but consideration of some matter or compliance with some requirement has been inadvertently omitted, applicant may be given a new time period for reply under § 1.134 to supply the omission.

[Paras. (a), (b), and (c), 47 FR 41276, Sept. 17, 1982, effective Oct. 1, 1982; para. (d) deleted, 49 FR 555, Jan. 4, 1984, effective Apr. 1, 1984; revised, 62 FR 53131, Oct. 10, 1997, effective Dec. 1, 1997]

Analysis

As stated above, the Office Action Summary which was mailed with the Final Rejection contains a typographical error, in that it indicated that the action was non-final. In short, the Examiner checked the wrong box. Instead of checking the box next to the text "this action is final," he checked the box next to the text "this action is non-final."

Petitioner has asserted that the error "affects Applicant's ability to reply to the Office Action[1]." It is not clear how this typographical error and his failure to realize that the rejection was final prevented him from replying to the Office Action, since a response to the final rejection was timely received on November 14, 2005.

Petitioner has further asserted that he acted "in reliance on the content of the Office Action Summary sheet, docketed the Office Action as non-final and having a 'DL 1st off.A' of 18 August 2005." It is noted that the sixth page of the Office

1 Petition, page 1.

Action of May 18, 2005 states "**THIS ACTION IS MADE FINAL** (emphasis included)…a shortened statutory period for this final action…" Why Petitioner would have relied on the cover sheet, when the text of the decision made it clear that the action was a final rejection, is not understood. Petitioner would be hard pressed to assert that the text of the decision did not clearly and unambiguously state that the rejection was final.

There is no reason that Petitioner, should not have been able to quickly discern upon a cursory inspection of the text of the decision that this Office communication constituted a final rejection, and that the indication on the Office Action Summary Sheet was a mere typographical error. This action constituted the third examination by the Examiner. In the text of the rejection, the Examiner clearly stated that this action was final, and set this indication off in text which was both emboldened and capitalized. As a registered practitioner, Petitioner should have recognized the typographical error for what it was. If Petitioner had even briefly skimmed the text of the rejection, there is simply no way that this typographical error could have "severely affected Applicant's ability to reply to the Office Action[2]."

Assuming arguendo that there was no way for him to determine which indicator was controlling, what prevented Petitioner from looking in private PAIR, so as to determine whether the Office communication had been characterized as a non-final or a final rejection?

Petitioner states that he spoke with the Examiner on or about September 13, 2005 and an "informal reply[3]" was consequently sent on September 14, 2005. Subsequently, an official reply was provided to the Office. What was contained in this informal reply, cannot be discerned, as it is not a part of the record. Pursuant to 37 C.F.R. §1.2, "the action of the Patent and Trademark Office will be based exclusively on the written record in the Office."

Petitioner states that the advisory action constituted the "first official notification Applicant received indicating that the Office was proceeding with prosecution in the case 'after final[4]." As stated above, the final office action provided notification of the finality of the same.

Finally, Petitioner states that the advisory action was delivered "too late for Applicant to respond[5]." It is clear from rules 37 C.F.R. §§1.116 and 1.135 that abandonment of an application is risked when the applicant proffers an amendment

---

2 Id. at 3.
3 Id. at 2.
4 Id. at 3.
5 Id.

after the mailing of a final Office action. The rule clearly indicates that the mere filing of an amendment does not relieve applicant of the duty to take appropriate action to save the application from abandonment.

If steps are not taken after final to maintain pendency prior to the expiration of the maximum extendable period for reply, the application will go abandoned. Put another way, the submission of an after final amendment which fails to place the application in condition for allowance will result in the abandonment of the application, unless one of the following four items is filed prior to the maximum extendable period for reply:

- a subsequent amendment which places the application in condition for allowance:
- a Notice of Appeal:
- a Request for a Continuation Application pursuant to 37 C.F.R. § 1.53(b), if applicable:
- a Request for Continued Examination pursuant to 37 C.F.R. §1.114, and;
- a Terminal Disclaimer, if applicable.

Petitioner should have recognized that the Office communication of May 18, 2005 constituted a final rejection. Petitioner should have submitted one of the items listed immediately above. The after-final amendment which was submitted failed to place the application in condition for allowance, and as such, the present application was properly held to be abandoned.

CONCLUSION

For the reasons discussed above, the petition under 37 C.F.R. §1.181 must be **DISMISSED**.

Petitioner's only relief is a petition under 37 C.F.R. §§1.137(a) and/or (b), and - having been made aware of this reality - Petitioner's delay in promptly seeking relief under 37 C.F.R. §1.137(b) may be considered evidence of intentional delay and an absolute bar to revival.

NOTICE:

Any request for reconsideration of this decision under 37 C.F.R. §1.181 must be submitted within **TWO (2) MONTHS** from the mail date of this decision. Extensions of time under 37 C.F.R.

should include a cover letter entitled " Renewed Petition under 37 C.F.R. §1.181," and should only address the deficiencies noted in this decision.

Thereafter, there will be no further reconsideration of this matter[6, 7].

Paul Shanoski
Senior Attorney
Office of Petitions
United States Patent and Trademark Office

---

[6] For more than a century, punctuality and due diligence, equally with good faith, have been deemed essential requisites to the success of those who seek to obtain the special privileges of the patent law, and they are demanded in the interest of the public and for the protection of rival inventors. See: Porter v. Louden, 7 App.D.C. 64 (C.A.D.C. 1895), citing Wollensak v. Sargent, 151 U.S. 221, 228, 38 L. Ed. 137, 14 S. Ct. 291 (1894). An invention benefits no one unless it is made public, and the rule of diligence should be so applied as to encourage reasonable promptness in conferring this benefit upon the public. Automatic Electric Co. v. Dyson, 52 App. D.C. 82; 281 F. 586 (C.A.D.C. 1922). Generally, 35 U.S.C. §6; 37 C.F.R.§§1.181, 182, 183.

7 If, on the second request for reconsideration, Petitioner fails to satisfy the showings burden required: (a) the resulting decision may be one viewed as final agency action; and (b) provisions for reconsideration, such as those at 37 C.F.R. §1.137(e), will **not** apply to that decision.

UNITED STATES PATENT AND TRADEMARK OFFICE

COMMISSIONER FOR PATENTS
UNITED STATES PATENT AND TRADEMARK OFFICE
P.O. BOX 1450
ALEXANDRIA, VA 22313-1450
WWW.USPTO.GOV

Paper No. None

MOETTELI & ASSOCIATES SARL
ST. LEONHARDSTRASSE 4
ST. GALLEN CH-90-00 CH SWITZERLAND

COPY MAILED
DEC 18 2006
OFFICE OF PETITIONS

In re Application of :
Konstantinos Spartiotis et al. :
Application No. 10/154,264 :
Filed: May 23, 2002 :
Attorney Docket Number: AJAT-186R :
Title: RADIATION IMAGING DEVICE AND SYSTEM :

DECISION ON PETITION
UNDER 37 C.F.R. §1.137(B)

This is a decision on the petition filed August 16, 2006, under 37 C.F.R. §1.137(b)[1], to revive the above-identified application.

The above-identified application became abandoned for failure to reply within the meaning of 37 C.F.R. §1.113 in a timely manner to the final Office action mailed May 18, 2005, which set a shortened statutory period for reply of three months. An after-final amendment was received on September 16, 2005 along with a one-month extension of time, and an advisory action was mailed on November 14, 2005. No further extensions of time under the provisions of 37 C.F.R. §1.136(a) were available, and no further responses were received. Accordingly, the above-identified application became abandoned on September 19, 2005. A notice of abandonment was mailed on April 20, 2006.

---

1 A grantable petition pursuant to 37 C.F.R. §1.137(b) must be accompanied by:

(1) The reply required to the outstanding Office action or notice, unless previously filed;
(2) The petition fee as set forth in § 1.17(m);
(3) A statement that the entire delay in filing the required reply from the due date for the reply until the filing of a grantable petition pursuant to this paragraph was unintentional. The Commissioner may require additional information where there is a question whether the delay was unintentional, and;
(4) Any terminal disclaimer (and fee as set forth in § 1.20(d)) required pursuant to paragraph (d) of this section.

A petition pursuant to 37 C.F.R. §1.181(a) was filed on May 3, 2006, and was dismissed via the mailing of a decision on July 17, 2006.

With the present petition, Petitioner has submitted the petition fee, a notice of appeal, and the proper statement of unintentional delay. No terminal disclaimer is required.

As such, the petition under 37 C.F.R. §1.137(b) is **GRANTED**.

It is noted that on December 14, 2006, Petitioner filed a Request for Continued Examination (RCE) under 37 C.F.R. §1.114, including a request for consideration of a previously submitted amendment and payment of the RCE fee. The concurrently submitted two-month extension of time is not required, and will be refunded to Petitioner's Deposit Account in due course.

The Technology Center will be notified of this decision. The Technology Center's support staff will notify the Examiner of this decision, so that the submission under 37 C.F.R. §1.114 - the amendment filed on September 16, 2005 - can be processed.

Telephone inquiries regarding *this decision* should be directed to the undersigned at (571) 272-3225[2]. All other inquiries concerning examination procedures or status of the application should be directed to the Technology Center.

Paul Shanoski
Senior Attorney
Office of Petitions
United States Patent and Trademark Office

---

2 Petitioner will note that all practice before the Office should be in writing, and the action of the Office will be based exclusively on the written record in the Office. See 37 C.F.R. §1.2. As such, Petitioner is reminded that no telephone discussion may be controlling or considered authority for Petitioner's further action(s).

UNITED STATES PATENT AND TRADEMARK OFFICE

Commissioner for Patents
United States Patent and Trademark Office
P.O. Box 1450
Alexandria, VA 22313-1450
www.uspto.gov

SCHLUMBERGER OILFIELD
SERVICES
200 GILLINGHAM LANE
MD 200-9
SUGAR LAND, TX 77478

COPY MAILED
SEP 28 2006
OFFICE OF PETITIONS

In re Application of

Smits, et al. :

Application No. 10/154,265

: DECISION ON PETITION

Filed: May 23, 2002

:

Attorney Docket No. 24.0841

This is a decision on the petition under 37 CFR 1.137(b), filed February 3, 2006, to revive the above-identified application.

The petition is **GRANTED**.

The above-cited application became abandoned for failure to file a proper reply in a timely manner to the final Office action mailed June 29, 2005, which set a shortened statutory period for reply of three (3) months from its mailing date. A response was filed on December 20, 2005, with a request for an extension of time within the third month. An Advisory Action mailed January 10, 2006, advised petitioner that the response of December 20, 2005, failed to place the application in condition for allowance. No further responses were filed within the allowable period. The application became abandoned on December 30, 2005. A Notice of Abandonment was mailed on September 14, 2006.

The Request for Continued Examination filed February 3, 2006, is noted and made of record

The application is being forwarded to Technology Center 2600, GAU 2612 for further processing.

Telephone inquiries concerning this decision should be directed to the undersigned at (571) 272-3222.

Kenya McLaughlin

Kenya A. McLaughlin
Petitions Attorney
Office of Petitions

UNITED STATES PATENT AND TRADEMARK OFFICE

COMMISSIONER FOR PATENTS
UNITED STATES PATENT AND TRADEMARK OFFICE
WASHINGTON, D.C. 20231
www.uspto.gov
DW 10-02

Paper No. 4

CASSAN MACLEAN
SUITE 401
80 ABERDEEN ST.
OTTAWA ON K1S 5R5
CANADA

COPY MAILED

OCT 2 5 2002

OFFICE OF PETITIONS

In re Application of	:
Birkett et al.	: DECISION GRANTING
Application No. 10/154,282	: PETITION
Filed: 22 May, 2002	:
Attorney Docket No. 11178-4	:

This is a decision on the petition filed on 15 October, 2002, which is treated as a petition under 37 CFR 1.10(c) requesting that the above-identified application be accorded a filing date of 22 May, 2002, rather than the presently accorded filing date of 23 May, 2002.

Petitioner alleges that the application was deposited in Express Mail service on 22 May, 2002. In support, on 15 October, 2002, petitioner supplied a copy of Express Mail Label No. EL677511055US (the same Express Mail number found on an itemized transmittal sheet accompanying the original application papers located in the official file). The "date-in" on the Express Mail label is 5/22/02.

In view of the above, the petition is granted. No petition fee is required and none has been charged.

The application is being returned to the Office of Initial Patent Examination (OIPE) for correction of the filing date to 22 May, 2002, and for issuance of a corrected Filing Receipt.

Telephone inquiries specific to this matter should be directed to the undersigned at (703) 308-6918.

D Wood

Douglas I. Wood
Senior Petitions Attorney
Office of Petitions
Office of the Deputy Commissioner
for Patent Examination Policy

UNITED STATES PATENT AND TRADEMARK OFFICE

Commissioner for Patents
United States Patent and Trademark Office
P.O. Box 1450
Alexandria, VA 22313-1450
www.uspto.gov

KIRKPATRICK & LOCKHART NICHOLSON GRAHAM
STATE STREET FINANCIAL CENTER
ONE LINCOLN STREET
BOSTON, MA 02111-2950

COPY MAILED
MAY 26 2006
OFFICE OF PETITIONS

In re Application of	:	
Alexander Neil Birkett et al	:	
Application No. 10/154,282	:	DECISION ON PETITION
Filed: May 22, 2002	:	TO WITHDRAW
Attorney Docket No. ICE-004	:	FROM RECORD
	:	

This is a decision on the Request to Withdraw as attorney or agent of record under 37 C.F.R. § 1.36(b), filed December 30, 2005.

The petition is **NOT APPROVED**.

A review of the file record indicates that Thomas A. Turano does not associated with customer No. 022832, does not have power of attorney in this application nor is there any statement or evidence of record of employment in or otherwise being engaged in the proceedings in this application. Accordingly, the request to withdraw under 37 C.F.R. § 1.36(b) is not applicable.

All future communications from the Office will continue to be directed to the below-listed address until otherwise notified by applicants.

This application is being referred to Technology Center AU 2611 to await a reply to the non-final Office action mailed March 20, 2006.

Telephone inquires concerning this decision should be directed to Wan Laymon at 571-272-3220.

Denise Pothier
Petitions Examiner
Office of Petitions

cc: BERKELEY LAW & TECHNOLOGY GROUP
1700 NW 167TH PLACE, SUITE 240
BEAVERTON, OR 97006

UNITED STATES PATENT AND TRADEMARK OFFICE

Commissioner for Patents
United States Patent and Trademark Office
P.O. Box 1450
Alexandria, VA 22313-1450
www.uspto.gov

Kurt M. Maschoff
BUCKLEY, MASCHOFF, TALWALKAR LLC
5 Elm Street
New Canaan, CT 06840

MAILED

JUN 2 5 2005

Technology Center 2100

In re Application of:	)	
Jeffrey Haims et al	)	
Application No. 10/154,303	)	
Filed: May 24, 2002	)	**DECISION ON REQUEST FOR**
For: METHOD AND APPARATUS FOR	)	**WITHDRAWAL AS ATTORNEY**
FACILITATING ONLINE	)	
COMMUNICATION	)	

This is a decision on the Request To Withdraw from Representation filed May 18, 2005.

A grantable request to withdraw as attorney of record should indicate thereon the present mailing addresses of the attorney(s) who is/are withdrawing from the record and of the applicant. The request for withdrawal must be signed by every attorney seeking to withdraw or contain a clear indication that one attorney is signing on behalf of another/others. A request to withdraw will not be approved unless at least 30 (thirty) days would remain between the date of approval and the later of the expiration date of a time to file a response or the expiration date of the maximum time period which can be extended under 37 C.F.R. § 1. 136(a). The effective date of withdrawal being the date of decision and not the date of request. See M.P.E.P. § 402.06. **37 C.F.R. § 1.36 further requires that the applicant or patent owner be notified of the withdrawal of the attorney or agent**.

Accordingly, the request is **DENIED**.

All future communications from the United States Patent and Trademark Office (Office) will continue to be directed to the above-listed address until otherwise notified by applicant. Applicant is reminded of the obligation to promptly notify the Office of any change in correspondence address to ensure receipt of all communications from the Office.

Michelle R. Eason for

Vincent N. Trans
Special Program Examiner
Technology Center 2100
(571) 272-3613

UNITED STATES PATENT AND TRADEMARK OFFICE

Commissioner for Patents
United States Patent and Trademark Office
P.O. Box 1450
Alexandria, VA 22313-1450
www.uspto.gov

Kurt M. Maschoff
BUCKLEY, MASCHOFF, TALWALKAR LLC
5 Elm Street
New Canaan, CT 06840

MAILED

AUG 2 3 2005

Technology Center 2100

In re Application of:	)	
Jeffrey Haims et al	)	
Application No. 10/154,303	)	
Filed: May 24, 2002	)	**DECISION ON REQUEST FOR**
For: METHOD AND APPARATUS FOR	)	**WITHDRAWAL AS ATTORNEY**
FACILITATING ONLINE	)	
COMMUNICATION	)	

This is a decision on the Request To Withdraw from Representation filed July 05, 2005.

A grantable request to withdraw as attorney of record should indicate thereon the present mailing addresses of the attorney(s) who is/are withdrawing from the record and of the applicant. The request for withdrawal must be signed by every attorney seeking to withdraw or contain a clear indication that one attorney is signing on behalf of another/others. A request to withdraw will not be approved unless at least 30 (thirty) days would remain between the date of approval and the later of the expiration date of a time to file a response or the expiration date of the maximum time period which can be extended under 37 C.F.R. § 1. 136(a). The effective date of withdrawal being the date of decision and not the date of request. See M.P.E.P. § 402.06. **37 C.F.R. § 1.36 further requires that the applicant or patent owner be notified of the withdrawal of the attorney or agent**.

There is no indication that Applicant has been notified of the request for withdrawal.

Accordingly, the request is **DENIED**.

All future communications from the United States Patent and Trademark Office (Office) will continue to be directed to the above-listed address until otherwise notified by applicant. Applicant is reminded of the obligation to promptly notify the Office of any change in correspondence address to ensure receipt of all communications from the Office.

Michelle R. Eason for

Vincent N. Trans
Special Program Examiner
Technology Center 2100
(571) 272-3613
Information Security
571-272-3613

UNITED STATES PATENT AND TRADEMARK OFFICE

COMMISSIONER FOR PATENTS
UNITED STATES PATENT AND TRADEMARK OFFICE
P.O. BOX 1450
ALEXANDRIA, VA 22313-1450
www.uspto.gov

BARNES & THORNBURG
11 SOUTH MERIDIAN
INDIANAPOLIS, IN 46204

COPY MAILED

DEC 28 2004

OFFICE OF PETITIONS

In re Application of :
Dennis J. Gallant, et al. :
Application No. 10/154,314 : ON PETITION
Filed: May 23, 2002 :
Attorney Docket No. 7175-69443 :

This is a decision on the petition, filed December 20, 2004, under 37 CFR 1.313(c)(2) to withdraw the above-identified application from issue after payment of the issue fee.

The petition is **GRANTED**.

The above-identified application is withdrawn from issue for consideration of a submission under 37 CFR 1.114 (request for continued examination). See 37 CFR 1.313(c)(2).

Petitioner is advised that the issue fee paid on June 18, 2004, in the above-identified application cannot be refunded. If, however, the above-identified application is again allowed, petitioner may request that it be applied towards the issue fee required by the new Notice of Allowance. [1]

Telephone inquiries relating to this decision should be directed to the undersigned at (571) 272-3204.

The application is being referred to Technology Center AU 3635 for further processing of the request for continued examination under 37 CFR 1.114 filed December 20, 2004.

Sherry D. Brinkley
Petitions Examiner
Office of Petitions
Office of the Deputy Commissioner
for Patent Examination Policy

[1]The request to apply the issue fee to the new Notice may be satisfied by completing and returning the new Issue Fee Transmittal Form PTOL-85(b), which includes the following language thereon: "Commissioner for Patents is requested to apply the Issue Fee and Publication Fee (if any) or re-apply any previously paid issue fee to the application identified above." Petitioner is advised that, whether a fee is indicated as being due or not, the Issue Fee Transmittal Form **must** be completed and timely submitted to avoid abandonment. Note the language in bold text on the first page of the Notice of Allowance and Fee(s) Due (PTOL-85).

UNITED STATES PATENT AND TRADEMARK OFFICE

OIPE JC131
JUN 17 2005
PATENT & TRADEMARK OFFICE

COMMISSIONER FOR PATENTS
UNITED STATES PATENT AND TRADEMARK OFFICE
P.O. BOX 1450
ALEXANDRIA, VA 22313-1450
www.uspto.gov

BARNES & THORNBURG
11 SOUTH MERIDIAN
INDIANAPOLIS, IN 46204

RECEIVED
DEC 30 2004
BARNES & THORNBURG

COPY MAILED
DEC 28 2004
OFFICE OF PETITIONS

In re Application of
Dennis J. Gallant, et al.
Application No. 10/154,314
Filed: May 23, 2002
Attorney Docket No. 7175-69443

ON PETITION

This is a decision on the petition, filed December 20, 2004, under 37 CFR 1.313(c)(2) to withdraw the above-identified application from issue after payment of the issue fee.

The petition is **GRANTED**.

The above-identified application is withdrawn from issue for consideration of a submission under 37 CFR 1.114 (request for continued examination). See 37 CFR 1.313(c)(2).

Petitioner is advised that the issue fee paid on June 18, 2004, in the above-identified application cannot be refunded. If, however, the above-identified application is again allowed, petitioner may request that it be applied towards the issue fee required by the new Notice of Allowance. [1]

Telephone inquiries relating to this decision should be directed to the undersigned at (571) 272-3204.

The application is being referred to Technology Center AU 3635 for further processing of the request for continued examination under 37 CFR 1.114 filed December 20, 2004.

Sherry D. Brinkley
Petitions Examiner
Office of Petitions
Office of the Deputy Commissioner
for Patent Examination Policy

[1]The request to apply the issue fee to the new Notice may be satisfied by completing and returning the new Issue Fee Transmittal Form PTOL-85(b), which includes the following language thereon: "Commissioner for Patents is requested to apply the Issue Fee and Publication Fee (if any) or re-apply any previously paid issue fee to the application identified above." Petitioner is advised that, whether a fee is indicated as being due or not, the Issue Fee Transmittal Form **must** be completed and timely submitted to avoid abandonment. Note the language in bold text on the first page of the Notice of Allowance and Fee(s) Due (PTOL-85).

UNITED STATES PATENT AND TRADEMARK OFFICE

COMMISSIONER FOR PATENTS
UNITED STATES PATENT AND TRADEMARK OFFICE
P.O. BOX 1450
ALEXANDRIA, VA 22313-1450
WWW.USPTO.GOV

Paper No. 12

LISA A. HAILE J.D., PH.D
GRAY CARY WARE & FREIDENRICH
4365 EXECUTIVE DRIVE
SUITE 1100
SAN DIEGO, CA 92121-2133

COPY MAILED

JUN 05 2003

OFFICE OF PETITIONS

In re Application of	:	
Lee et al	:	
Application No. 10/154,333	:	NOTICE
Filed: May 21, 2002	:	
Attorney Docket No. JHU1110-4	:	

This is a notice regarding your request for acceptance of a fee deficiency submission under 37 CFR 1.28. On September 1, 1998, the Court of Appeals for the Federal Circuit held that 37 CFR 1.28(c) is the sole provision governing the time for correction of the erroneous payment of the issue fee as a small entity. **See DH Technology v. Synergystex International, Inc. 154 F.3d 1333, 47 USPQ2d 1865 (Fed. Cir. Sept. 1, 1998).**

The Office no longer investigates or rejects original or reissue applications under 37 CFR 1.56. **1098 Off. Gaz. Pat. Office 502 (January 3, 1989).** Therefore, nothing in this Notice is intended to imply that an investigation was done.

Your fee deficiency submission under 37 CFR 1.28 is hereby **ACCEPTED.**

Inquiries related to this communication should be directed to the Office of Petitions Staff at (703) 305-9285.

This file is being forwarded to Technology Center AU 1646.

Wan Laymon
Petitions Examiner
Office of Petitions
Office of the Deputy Commissioner
for Patent Examination Policy

UNITED STATES PATENT AND TRADEMARK OFFICE

COMMISSIONER FOR PATENTS
UNITED STATES PATENT AND TRADEMARK OFFICE
P.O. BOX 1450
ALEXANDRIA, VA 22313-1450
www.uspto.gov

MAILED

NOV 26 2003

DIRECTOR'S OFFICE
TECHNOLOGY CENTER 3600

DORSEY & WHITNEY, LLP
INTELLECTUAL PROPERTY DEPARTMENT
370 SEVENTEENTH STREET
SUITE 4700
DENVER, CO 80202-5647

In re application of:
Patrick Sheehan
Application No. 10/154,337 :
Filed: May 22, 2002 :
For: SYSTEM AND METHOD FOR PROVIDING AND REDEEMING ELECTRONIC PAPERLESS COUPONS :

Paper No. 5

DECISION ON REQUEST FOR WITHDRAWAL OF ATTORNEY

This is a decision on the request filed on October 28, 2003, under 37 CFR 1.36 and MPEP 402.06, requesting permission to withdraw as the attorney of record in the above-identified application.

The request is **NOT APPROVED**.

Under 37 CFR 1.36 an attorney may withdraw only upon application to and approval by the Commissioner. It should be noted that a withdrawal is effective when approved, not when filed. Besides giving due notice to his or her client and delivering to the client all papers and property to which the client is entitled as specified under 37 CFR 10.40, approval of such a request requires that the following conditions be met:

A) Each attorney of record must sign the notice of withdrawal, or the notice must contain a clear indication of one attorney signing on behalf of another, because the Office does not recognize law firms;

B) A proper reason for the withdrawal as enumerated in 37 CFR 10.40(b) or subsection (1)-(6) of 37 CFR 10.40(c) must be provided; and

C) If withdrawal is requested in accordance with 37 CFR 10.40(c) above, there must be at least 30 days between approval of the withdrawal and the later of the expiration date of a time period for reply or the expiration date of the period which can be obtained by a petition and fee for extension of time under 37 CFR 1.136(a).

The request to withdraw as attorney in the above-identified application is not approved because the request does not comply with Item B) above.

As to Item B), there is no indication in the file record of the assignee being the "client", and responsible for payment of legal fees. Absent a 3.73(b) statement, the "client" referred to in 37 CFR 10.40 is seen as being those individuals who conferred power upon the attorneys, in this case the inventors. Therefore, the stated reason for withdrawal that "the Assignee for this patent application has requested transfer of the files." is improper. A proper reason for withdrawal as enumerated in 37 CFR 10.40(b) subsections (1)-(4) or subsections (1)-(6) of 37 CFR 10.40(c) must be provided.

Kenneth J. Dorner
Special Programs Examiner
Patent Technology Center 3600
(703) 308-0866

KJD/cps: 11/23/03

UNITED STATES PATENT AND TRADEMARK OFFICE

Commissioner for Patents
United States Patent and Trademark Office
P.O. Box 1450
Alexandria, VA 22313-1450
www.uspto.gov

OPTV/MOFO
C/O MORRISON & FOERSTER LLP
1650 TYSONS BOULEVARD, SUITE 300
MCLEAN, VA 22102

COPY MAILED

JUN 2 5 2007

OFFICE OF PETITIONS

In re Application of

Patrick M. Sheehan
Application No. 10/154,337
Filed: May 22, 2002
Attorney Docket No. 5358.02

DECISION ON PETITION
TO WITHDRAW
FROM RECORD

This is a decision on the Request to Withdraw as attorney or agent under 37 C.F.R. § 1.36(b) or 37 C.F.R. § 10.40 filed January 17, 2007.

The request is **NOT APPROVED**.

A review of the file record indicates that Adam Keser does not have power of attorney in this patent application nor is there any statement or evidence of record of employment in or otherwise being engaged in the proceedings in this patent application. Accordingly, the request to withdraw under 37 C.F.R. § 1.36(b) is not applicable.

All future communications from the Office will continue to be directed to the below-listed address until otherwise properly notified by the applicant.

Telephone inquires concerning this decision should be directed to undersigned at 571-272-1642.

April M. Wise
Petitions Examiner
Office of Petitions

cc: MARC KAUFMAN, ESQ.
NIXON PEABODY, LLP
401 9TH STREET NW
SUITE 900
WASHINGTON, DC 20004

UNITED STATES PATENT AND TRADEMARK OFFICE

COMMISSIONER FOR PATENTS
UNITED STATES PATENT AND TRADEMARK OFFICE
P.O. BOX 1450
ALEXANDRIA, VA 22313-1450
www.uspto.gov

Fulwider Patton Lee & Utecht, LLP
200 Oceangate, Suite 1550
Long Beach, CA 90802

COPY MAILED

JAN 18 2005

OFFICE OF PETITIONS

In re Application of	:	
Charles Shen	:	
Application No. 10/154,378	:	DECISION GRANTING PETITION
Filed: May 23, 2002	:	UNDER 37 CFR 1.137(b)
Attorney Docket No. MCCAP.61231	:	

This is a decision on the petition, filed October 22, 2004, which is being treated as a petition under 37 CFR 1.137(b) to revive the instant nonprovisional application for failure to timely notify the U.S. Patent and Trademark (USPTO) of the filing of an application in a foreign country, or under a multinational treaty that requires publication of applications eighteen months after filing. *See* 37 CFR 1.137(f).

The petition is **GRANTED**.

Petitioner states that the instant nonprovisional application is the subject of an application filed in an eighteen-month publication country on January 14, 2003. However, the USPTO was unintentionally not notified of this filing within 45 days subsequent to the filing of the subject application in an eighteen-month publication country.

In view of the above, this application became abandoned pursuant to 35 U.S.C. § 122(b)(2)(B)(iii) and 37 CFR 1.213(c) for failure to timely notify the Office of the filing of an application in a foreign country or under a multilateral international agreement that requires publication of applications 18 months after filing.

A petition to revive an application abandoned pursuant to 35 U.S.C. 122(b)(2)(B)(iii) for failure to notify the USPTO of a foreign filing must be accompanied by:

(1) the required reply which is met by the notification of such filing in a foreign country or under a multinational treaty;
(2) the petition fee as set forth in 37 CFR 1.17(m); and
(3) a statement that the entire delay in filing the required reply from the due date of the reply until the filing of a grantable petition was unintentional.

The instant petition has been found to be in compliance with 37 CFR 1.137(b). Accordingly, the failure to timely notify the USPTO of a foreign or international filing within 45 days after the date of filing of such foreign or international application as provided by 35 U.S.C. § 122(b)(2)(B)(iii) and 37 CFR 1.213(c) is accepted as having been unintentionally delayed.

The previous Request and Certification under 35 U.S.C. § 122(b)(2)(B)(i) has been rescinded. A Notice Regarding Rescission of Nonpublication Request which sets forth the projected publication date of April 21, 2005 accompanies this decision on petition.

Telephone inquiries concerning this decision should be directed to the undersigned at (571) 272-3223.

This application is being referred to Technology Center Art Unit 3764 for examination in due course.

Marianne E. Jenkins

Marianne E. Jenkins
Petitions Examiner
Office of Petitions
Office of the Deputy Commissioner
for Patent Examination Policy

ATTACHMENT: Notice Regarding Rescission of Nonpublication Request

UNITED STATES PATENT AND TRADEMARK OFFICE

UNITED STATES DEPARTMENT OF COMMERCE
United States Patent and Trademark Office
Address: COMMISSIONER FOR PATENTS
P.O. Box 1450
Alexandria, Virginia 22313-1450
www.uspto.gov

APPLICATION NUMBER	FILING/RECEIPT DATE	FIRST NAMED APPLICANT	ATTY. DOCKET NO.
10/154,378	05/23/2002	Charles Shen	MCCAP.61231

CONFIRMATION NO. 2154

OC000000014945437

27629
FULWIDER PATTON LEE & UTECHT, LLP
200 OCEANGATE, SUITE 1550
LONG BEACH, CA 90802

Date Mailed: 01/13/2005

Communication Regarding Rescission Of Nonpublication Request and/or Notice of Foreign Filing

Applicant's rescission of the previously-filed nonpublication request and/or notice of foreign filing is acknowledged. The paper has been reflected in the Patent and Trademark Office's (USPTO's) computer records so that the earliest possible projected publication date can be assigned.

The projected publication date is 04/21/2005.

If applicant rescinded the nonpublication request before or on the date of "foreign filing,"[1] then no notice of foreign filing is required.

If applicant foreign filed the application after filing the above application and before filing the rescission, and the rescission did not also include a notice of foreign filing, then a notice of foreign filing (not merely a rescission) is required to be filed within 45 days of the date of foreign filing. See 35 U.S.C. § 122(b)(2)(B)(iii), and Clarification of the United States Patent and Trademark Office's Interpretation of the Provisions of 35 U.S.C. § 122(b)(2)(B)(ii)-(iv), 1272 Off. Gaz. Pat. Office 22 (July 1, 2003).

If a notice of foreign filing is required and is not filed within 45 days of the date of foreign filing, then the application becomes abandoned pursuant to 35 U.S.C. § 122(b)(2)(B)(iii). In this situation, applicant should either file a petition to revive or notify the Office that the application is abandoned. See 37 CFR 1.137(f). Any such petition to revive will be forwarded to the Office of Petitions for a decision. Note that the filing of the petition will not operate to stay any period of reply that may be running against the application.

Questions regarding petitions to revive should be directed to the Office of Petitions at (703) 305-9282. Questions regarding publications of patent applications should be directed to the patent application publication hotline at (703) 605-4283 or by e-mail pgpub@uspto.gov.

[1] Note, for purpose of this notice, that "foreign filing" means "filing an application directed to the same invention in another country, or under a multilateral international agreement, that requires publication of applications 18 months after filing".

PTO/SB/66 (03-09)
Approved for use through 03/31/2012. OMB 0651-0016
U.S. Patent and Trademark Office: U.S. DEPARTMENT OF COMMERCE
Under the Paperwork Reduction Act of 1995, no persons are required to respond to a collection of information unless it displays valid OMB control number.

PETITION TO ACCEPT UNINTENTIONALLY DELAYED PAYMENT OF MAINTENANCE FEE IN AN EXPIRED PATENT (37 CFR 1.378(c))

Patent Number	Issue Date (YYYY-MM-DD)	Application Number	Filing Date (YYYY-MM-DD)	Docket Number (if applicable)
6894236	2005-05-17	10154383	2002-05-23	50313-1060

CAUTION: Maintenance fee (and surcharge, if any) payment must correctly identify: (1) the patent number and (2) the application number of the actual U.S. application leading to issuance of that patent to ensure the fee(s) is/are associated with the correct patent. 37 CFR 1.366(c) and (d).

SMALL ENTITY
☒ Patentee claims, or has previously claimed, small entity status. See 37 CFR 1.27.

LOSS OF ENTITLEMENT TO SMALL ENTITY STATUS
☐ Patentee is no longer entitled to small entity status. See 37 CFR 1.27(g)

NOT Small Entity			Small Entity		
	Fee	Code		Fee	Code
○	3 ½ year	(1551)	◉	3 ½ year	(2551)
○	7 ½ year	(1552)	○	7 ½ year	(2552)
○	11 ½ year	(1553)	○	11 ½ year	(2553)

SURCHARGE
The surcharge required by 37 CFR 1.20(i)(2) (Fee Code 1558) must be paid as a condition of accepting unintentionally delayed payment of the maintenance fee.

MAINTENANCE FEE (37 CFR 1.20(e)-(g))
The appropriate maintenance fee must be submitted with this petition.

STATEMENT
THE UNDERSIGNED CERTIFIES THAT THE DELAY IN PAYMENT OF THE MAINTENANCE FEE TO THIS PATENT WAS UNINTENTIONAL

PETITIONER(S) REQUEST THAT THE DELAYED PAYMENT OF THE MAINTENANCE FEE BE ACCEPTED AND THE PATENT REINSTATED

THIS PORTION MUST BE COMPLETED BY THE SIGNATORY OR SIGNATORIES

37 CFR 1.378(d) states: "Any petition under this section must be signed by an attorney or agent registered to practice before the Patent and Trademark Office, or by the patentee, the assignee, or other party in interest."

I certify, in accordance with 37 CFR 1.4(d)(4) that I am

◉ An attorney or agent registered to practice before the Patent and Trademark Office

○ A sole patentee

○ A joint patentee; I certify that I am authorized to sign this submission on behalf of all the other patentees.

○ A joint patentee; all of whom are signing this e-petition

○ The assignee of record of the entire interest

Patent Practitioner			
A signature of the applicant or representative is required in accordance with 37 CFR 1.33 and 10.18. Please see 37 CFR 1.4(d) for the form of the signature			
Signature	/M.PaulQualey,Jr./	Date (YYYY-MM-DD)	2009-08-10
Name	M. Paul Qualey, Jr.	Registration Number	43024

This collection of information is required by 37 CFR 1.378(c). The information is required to obtain or retain a benefit by the public which is to file (and by the USPTO to process) an application. Confidentiality is governed by 35 U.S.C. 122 and 37 CFR 1.11 and 1.14. This collection is estimated to take 1 hour to complete, including gathering, preparing, and submitting the completed application form to the USPTO. Time will vary depending upon the individual case. Any comments on the amount of time you require to complete this form and/ or suggestions for reducing this burden, should be sent to the Chief Information Officer, U.S. Patent and Trademark Office, U.S. Department of Commerce, P.O. Box 1450, Alexandria, VA 22313-1450. DO NOT SEND FEES OR COMPLETED FORMS TO THIS ADDRESS. **This form can only be used when in conjunction with EFS-Web. If this form is mailed to the USPTO, it may cause delays in reinstating the patent.**

Privacy Act Statement

The Privacy Act of 1974 (P.L. 93-579) requires that you be given certain information in connection with your submission of the attached form related to a patent application or patent. Accordingly, pursuant to the requirements of the Act, please be advised that: (1) the general authority for the collection of this information is 35 U.S.C. 2(b)(2); (2) furnishing of the information solicited is voluntary; and (3) the principal purpose for which the information is used by the U.S. Patent and Trademark Office is to process and/or examine your submission related to a patent application or patent. If you do not furnish the requested information, the U.S. Patent and Trademark Office may not be able to process and/or examine your submission, which may result in termination of proceedings or abandonment of the application or expiration of the patent.

The information provided by you in this form will be subject to the following routine uses:

1. The information on this form will be treated confidentially to the extent allowed under the Freedom of Information Act (5 U.S.C. 552) and the Privacy Act (5 U.S.C. 552a). Records from this system of records may be disclosed to the Department of Justice to determine whether the Freedom of Information Act requires disclosure of these records.

2. A record from this system of records may be disclosed, as a routine use, in the course of presenting evidence to a court, magistrate, or administrative tribunal, including disclosures to opposing counsel in the course of settlement negotiations.

3. A record in this system of records may be disclosed, as a routine use, to a Member of Congress submitting a request involving an individual, to whom the record pertains, when the individual has requested assistance from the Member with respect to the subject matter of the record.

4. A record in this system of records may be disclosed, as a routine use, to a contractor of the Agency having need for the information in order to perform a contract. Recipients of information shall be required to comply with the requirements of the Privacy Act of 1974, as amended, pursuant to 5 U.S.C. 552a(m).

5. A record related to an International Application filed under the Patent Cooperation Treaty in this system of records may be disclosed, as a routine use, to the International Bureau of the World Intellectual Property Organization, pursuant to the Patent Cooperation Treaty.

6. A record in this system of records may be disclosed, as a routine use, to another federal agency for purposes of National Security review (35 U.S.C. 181) and for review pursuant to the Atomic Energy Act (42 U.S.C. 218(c)).

7. A record from this system of records may be disclosed, as a routine use, to the Administrator, General Services, or his/her designee, during an inspection of records conducted by GSA as part of that agency's responsibility to recommend improvements in records management practices and programs, under authority of 44 U.S.C. 2904 and 2906. Such disclosure shall be made in accordance with the GSA regulations governing inspection of records for this purpose, and any other relevant (i.e., GSA or Commerce) directive. Such disclosure shall not be used to make determinations about individuals.

8. A record from this system of records may be disclosed, as a routine use, to the public after either publication of the application pursuant to 35 U.S.C. 122(b) or issuance of a patent pursuant to 35 U.S.C. 151. Further, a record may be disclosed, subject to the limitations of 37 CFR 1.14, as a routine use, to the public if the record was filed in an application which became abandoned or in which the proceedings were terminated and which application is referenced by either a published application, an application open to public inspections or an issued patent.

9. A record from this system of records may be disclosed, as a routine use, to a Federal, State, or local law enforcement agency, if the USPTO becomes aware of a violation or potential violation of law or regulation.

UNITED STATES PATENT AND TRADEMARK OFFICE

Commissioner for Patents
United States Patent and Trademark Office
P.O. Box 1450
Alexandria, VA 22313-1450
www.uspto.gov

In re Patent No. 6894236
Issue Date: May 17,2005
Application No. 10154383
Filed: May 23,2002
Attorney Docket No. 050313-1060

:
:DECISION GRANTING PETITION
:UNDER 37 CFR 1.378(c)
:

This is a decision on the electronic petition, filed August 10,2009 ,under 37 CFR 1.378(c) to accept the unintentionally delayed payment of the 3.5 year maintenance fee for the above-identified patent.

The petition is **GRANTED**.

The maintenance fee is accepted, and the above-identified patent reinstated as of August 10,2009 .
This decision also constitutes notice that the fee has been accepted. An electronic copy of the petition and this decision has been created as an entry in the Image File Wrapper. Nevertheless, petitioner should print and retain an independent copy.

Telephone inquiries related to this electronic decision should be directed to the Electronic Business Center at 1-866-217-9197.

UNITED STATES PATENT AND TRADEMARK OFFICE

Commissioner for Patents
United States Patent and Trademark Office
P.O. Box 1450
Alexandria, VA 22313-1450
www.uspto.gov

MYERS BIGEL SIBLEY & SAJOVEC
P.O. BOX 37428
RALEIGH, NC 27627

COPY MAILED
SEP 14 2006
OFFICE OF PETITIONS

In re Application of	:	
Louis-Georges Guy, et. al.	:	
Application No. 10/154,386	:	ON PETITION
Filed: May 23, 2002	:	
Attorney Docket No. 5600-81	:	

This is a decision on the petition under 37 CFR 1.137(b), filed April 25, 2006, to revive the above-identified application.

The petition is **GRANTED**.

The application became abandoned for failure to reply in a timely manner to the Restriction Requirement mailed January 10, 2005. A Notice of Abandonment was mailed on August 9, 2005.

The petition satisfies the requirements of 37 CFR 1.137(b) in that petitioner has supplied (1) the reply in the form of an Election; (2) the petition fee of $750; and (3) an adequate statement of unintentional delay.

This application file is being referred to Technology Center Art Unit 1635 for further processing.

Telephone inquiries concerning this decision should be directed to the undersigned at (571) 272-3226.

Andrea Smith
Petitions Examiner
Office of Petitions

UNITED STATES PATENT AND TRADEMARK OFFICE

Commissioner for Patents
United States Patent and Trademark Office
P.O. Box 1450
Alexandria, VA 22313-1450
www.uspto.gov

PATRICK J. O'SHEA
O'SHEA, GETZ & KOSAKOWSKI, P.C.
1500 MAIN STREET, SUITE 912
SPRINGFIELD MA 01115

COPY MAILED
JUL 28 2006
OFFICE OF PETITIONS

In re Application of :
Rudiger Bolze et al. :
Application No. 10/154,393 : ON PETITION
Filed: May 23, 2002 :
Attorney Docket No.: 6745

This is a decision on the petition filed June 5, 2006 under 37 CFR 1.137(b),[1] to revive the above-identified application.

The petition is **GRANTED**.

This application became abandoned for failure to timely reply to the non-Final Office Action mailed July 26, 2005. A shortened statutory period of three months was set for replying to the non-Final Office Action. No extensions of time having been requested, this application became abandoned October 27, 2006. Accordingly, a Notice of Abandonment was mailed on May 4, 2006.

There is, however, no indication that petitioner herein was ever empowered to prosecute the instant application. If petitioner desires to receive future correspondence regarding this application, the appropriate power of attorney documentation must be submitted. A courtesy copy of this decision will be mailed to petitioner. However, all future correspondence will be directed to the address of record until such time as appropriate instructions are received to the contrary.

---

[1]Effective December 1, 1997, the provisions of 37 CFR 1.137(b) now provide that where the delay in reply was unintentional, a petition may be filed to revive an abandoned application or a lapsed patent pursuant to 37 CFR 1.137(b). A grantable petition filed under the provisions of 37 CFR 1.137(b) must be accompanied by:

(1) the required reply, unless previously filed. In a nonprovisional application abandoned for failure to prosecute, the required reply may be met by the filing of a continuing application. In a nonprovisional application filed on or after June 8, 1995, and abandoned for failure to prosecute, the required reply may also be met by the filing of a request for continued examination in compliance with § 1.114. In an application or patent, abandoned or lapsed for failure to pay the issue fee or any portion thereof, the required reply must be the payment of the issue fee or any outstanding balance thereof. In an application abandoned for failure to pay the publication fee, the required reply must include payment of the publication fee.

(2) the petition fee as set forth in 37 CFR 1.17(m);

(3) a statement that the entire delay in filing the required reply from the due date for the reply until the filing of a grantable petition pursuant to 37 CFR 1.137(b) was unintentional. The Commissioner may required additional information where there is a question whether the delay was unintentional; and

(4) any terminal disclaimer (and fee as set forth in 37 CFR 1.20(d)) required pursuant to 37 CFR 1.137(c)).

This matter is being referred to Technology Center 3737 for appropriate action on the amendment filed June 5, 2006.

Telephone inquiries concerning this matter should be directed to the undersigned Petitions Attorney at (571) 272-3212.

Patricia Faison-Ball

Patricia Faison-Ball
Senior Petitions Attorney
Office of Petitions

cc:

DUBOIS, BRYANT, CAMPBELL & SCHWARTZ, LLP
700 LAVACA STREET
SUITE 1300
AUSTIN, TX 78701

UNITED STATES PATENT AND TRADEMARK OFFICE

COMMISSIONER FOR PATENT
UNITED STATES PATENT AND TRADEMARK OFFIC
WASHINGTON, D.C. 20231
www.uspto.go

Paper No. 9

CHRISTENSEN O'CONNOR
JOHNSON KINDNESS
1420 FIFTH AVENUE
SUITE 2800
SEATTLE, WA 98101

COPY MAILED

FEB 2 0 2003

OFFICE OF PETITIONS

In re Application of	:	
Greg Gonzales et al	:	
Application No. 10/154,403	:	NOTICE
Filed: May 22, 2002	:	
Attorney Docket No. MSFT118856	:	

This is a notice regarding your request for acceptance of a fee deficiency submission under 37 CFR 1.28. On September 1, 1998, the Court of Appeals for the Federal Circuit held that 37 CFR 1.28(c) is the sole provision governing the time for correction of the erroneous payment of the issue fee as a small entity. **See DH Technology v. Synergystex International, Inc. 154 F.3d 1333, 47 USPQ2d 1865 (Fed. Cir. Sept. 1, 1998).**

The Office no longer investigates or rejects original or reissue applications under 37 CFR 1.56. **1098 Off. Gaz. Pat. Office 502 (January 3, 1989)**. Therefore, nothing in this Notice is intended to imply that an investigation was done.

Your fee deficiency submission under 37 CFR 1.28 is hereby **ACCEPTED**.

Inquiries related to this communication should be directed to the Office of Petitions Staff at (703) 305-9285.

This file is being forwarded to Technology Center 2100.

Irvin Dingle
Petitions Examiner
Office of Petitions
Office of the Deputy Commissioner
for Patent Examination Policy

UNITED STATES PATENT AND TRADEMARK OFFICE

Commissioner for Patents
United States Patent and Trademark Office
P.O. Box 1450
Alexandria, VA 22313-1450
www.uspto.gov

Paper No.

FOLEY & LARDNER LLP
150 EAST GILMAN STREET
P.O. BOX 1497
MADISON, WI 53701-1497

COPY MAILED

OCT 0 2 2006

OFFICE OF PETITIONS

In re Patent No. 6,950,700	:	
Norman Shealy	:	
Issue Date: September 27, 2005	:	LETTER REGARDING
Application No. 10/154,411	:	PATENT TERM ADJUSTMENT
Filed: May 23, 2002	:	
Atty Docket No. 079069-0117	:	

This is in response to the COMMUNICATION CONCERNING CALCULATION OF PTA filed October 3, 2005, pursuant to patentee's duty of good faith and candor. Patentee asserts that the patent term adjustment indicated in the patent of five hundred four (504) days disagrees with their calculation of five hundred two (502) days.

The request for correction of the patent term adjustment indicated in the patent is **DISMISSED**.

Patentees are given **TWO (2) MONTHS** to respond to this decision. No extensions of time will be granted under § 1.136.

On September 27, 2005, the above-identified application matured into U.S. Patent No. 6,950,700, with a revised Patent Term Adjustment of 504 days. Patentee asserts that the period of adjustment for Office delay should be increased by 2 days for Office delay in issuing the patent after payment of the issue fee and satisfaction of all outstanding requirements. Patentee discloses that a period of reduction of 124 days, not 120 days should have been entered for applicant's filing of formal drawings after the mailing of the notice of allowance.

As to the request for 2 additional days of PTA, patentees are advised that § 1.705(d) provides the avenue before the Office for requesting reconsideration of the patent term adjustment indicated in the patent. See § 1.702-1.705. Moreover, § 1.705(d) provides that:

> If there is a revision to the patent term adjustment indicated in the notice of allowance, the patent will indicate the revised patent term adjustment. If the patent indicates or should have indicated a revised patent term adjustment, any request for reconsideration of the patent term adjustment indicated in the patent must be filed within two months of the date the patent issued and must comply with the requirements of paragraphs (b)(1) and (b)(2) of this section.

Further, 1.705(b)(1) requires that request must be accompanied by:

> (1) The fee set forth in § 1.18(e) ...

The instant request was timely filed within 2 months of the date of issuance of the patent. However, neither the fee under § 1.18(e) nor a general authorization to charge any required fees, accompanied the request. Accordingly, the request is dismissed for failure to comply with the requirement of paragraph (b)(1) to submit the fee under §1.18(e).

As to entry of a period of reduction of 124 days, rather than 120 days, patentees are incorrect. The only paper submitted after the notice of allowance was the drawings filed May 23, 2005. Further, 37 CFR 1.704(c)(10) provides that the period of adjustment set forth in § 1.703 shall be reduced by the lesser of:

> (i) The number of days, if any, beginning on the date the amendment under § 1.312 or other paper was filed and ending on the mailing date of the Office action or notice in response to the amendment under § 1.312 or such other paper; or
>
> (ii) Four months; and

In this instance, the lesser period of 120 days was properly entered.

In view thereof, the patent properly issued with a revised patent term adjustment of 504 days.

To the extent that this letter was submitted as an advisement to the Office of an error in Patentees' favor, the Office will not assess the $200.00 fee under 37 CFR 1.18(e). The Office thanks patentees for their good faith and candor in bringing this to the attention of the Office.

Telephone inquiries specific to this matter should be directed to the undersigned at (571) 272-3219.

Nancy Johnson
Senior Petitions Attorney
Office of Petitions

UNITED STATES PATENT AND TRADEMARK OFFICE

Commissioner for Patents
United States Patent and Trademark Office
P.O. Box 1450
Alexandria, VA 22313-1450
www.uspto.gov

DEC 22 2004

EDWARDS & ANGELL, LLP
P.O. BOX 55874
BOSTON MA 02205

In re Application of:
Christgau et al.
Serial No.: 10/154,424
Filed: May 23, 2002
Attorney Docket No.: 46865/56844-C

DECISION ON PETITION TO WITHDRAW THE HOLDING OF ABANDONMENT

This is in response to applicants' petition under 37 CFR. § 1.181(a) and MPEP 711.03(c) filed on August 24, 2004, requesting withdrawal of the holding of abandonment of the above-identified application based on non-receipt of an Office communication and to restore the application to a pending status.

A review of the file history shows that the Office mailed a Notice to file missing parts of nonprovisional application to applicants on July 1, 2002. Applicants replied to the Notice of July 1, 2002 on August 22, 2002. On September 19, 2002, the Office mailed a Notice to comply with requirements for patent applications containing nucleotide sequence and/or amino acid sequence disclosures. On July 15, 2004, a notice of abandonment was mailed for failure to reply.

Applicants state that the Office communication of September 19, 2002 was never received and provides as evidence thereof a copy of the attorney docket report where the Office communication would have been entered if received, showing non-receipt of the Office communication. Based on the evidence presented, it is concluded that applicants never received the Office communication. In view thereof, the Notice of Abandonment mailed July 15, 2004, is vacated and the application is restored to pending status with the mailing date of this decision.

Applicants' petition is **GRANTED** retroactively as the case is no longer in abandoned status as of December 1, 2004 since the computer readable form (CFR) copy of the sequence listing was judged good technically.

Should there be any questions about this decision, please contact Marianne C. Seidel by letter addressed to Director, TC 1600, at the address listed above, or by telephone at 571-272-0584 or by facsimile at 703-872-9306.

Marianne C. Seidel for

Jasemine C. Chambers
Director, Technology Center 1600

UNITED STATES PATENT AND TRADEMARK OFFICE

Commissioner for Patents
United States Patent and Trademark Office
P.O. Box 1450
Alexandria, VA 22313-1450
www.uspto.gov

COPY MAILED

AUG 30 2005

OFFICE OF PETITIONS

HARNESS, DICKEY & PIERCE
P.O. BOX 828
BLOOMFIELD HILLS MN 48303

In re Application of :
Akira Morita :
Application No. 10/154,436 : ON PETITION
Filed: May 23, 2002 :
Attorney Docket No. 9319I-000692 :

This is a decision on the petition, filed August 19, 2005, under 37 CFR 1.313(c)(2) to withdraw the above-identified application from issue after payment of the issue fee.

The petition is **GRANTED**.

The above-identified application is withdrawn from issue for consideration of a submission under 37 CFR 1.114 (request for continued examination). See 37 CFR 1.313(c)(2).

Petitioner is advised that the issue fee paid on June 28, 1005 in the above-identified application cannot be refunded. If, however, the above-identified application is again allowed, petitioner may request that it be applied towards the issue fee required by the new Notice of Allowance.[1]

Telephone inquiries should be directed to the undersigned at (571) 272-3208.

The examiner of Technology Center AU 2674 will consider the request for continued examination under 37 CFR 1.114.

Karen Creasy

Karen Creasy
Petitions Examiner
Office of Petitions
Office of the Deputy Commissioner
for Patent Examination Policy

---

[1] The request to apply the issue fee to the new Notice may be satisfied by completing and returning the new Issue Fee Transmittal Form PTOL-85(b), which includes the following language thereon: "Commissioner for Patents is requested to apply the Issue Fee and Publication Fee (if any) or re-apply any previously paid issue fee to the application identified above." Petitioner is advised that, whether a fee is indicated as being due or not, the Issue Fee Transmittal Form **must** be completed and timely submitted to avoid abandonment. Note the language in bold text on the first page of the Notice of Allowance and Fee(s) Due (PTOL-85).

UNITED STATES PATENT AND TRADEMARK OFFICE

Commissioner for Patents
United States Patent and Trademark Office
P.O. Box 1450
Alexandria, VA 22313-1450
www.uspto.gov

NIXON & VANDERHYE, PC
901 NORTH GLEBE ROAD, 11TH FLOOR
ARLINGTON VA 22203

MAILED

JUL 20 2009

OFFICE OF PETITIONS

In re Application of :
MULLEN et al. :
Application No. 10/154,441 : DECISION ON PETITION
Filed: May 24, 2002 :
Attorney Docket No. LSN-4295-9 :

This is a decision on the petition, filed June 20, 2007, which is being treated as a petition under 37 CFR 1.181 (no fee), requesting withdrawal of the holding of abandonment in the above-identified application.

The petition is **GRANTED**.

This application was held abandoned in view of the petition under 37 CFR 1.138(c) filed December 4, 2002, requesting express abandonment to avoid publication of the above-identified application. The express abandonment was recognized in the notice of abandonment mailed on June 18, 2007.

Petitioner contends that the notice of abandonment mailed June 18, 2007 was in error.

A thorough review of USPTO records shows that: (1) petitioner filed in the above-identified application, on December 4, 2002, a petition entitled "Conditional Declaration of Express Abandonment and Petition to avoid publication under 37 CFR §§ 1.211(a)(1) and 1.138(c)"; (2) A letter withdrawing the above noted paper(s) filed December 4, 2002, was received in the Office on December 30, 2002; (3) the application was published on January 9, 2003 as US20030009402A1, and (4) a Notice of Abandonment was mailed on June 18, 2007 wherein the express abandonment filed December 4, 2002, was recognized.

As an initial matter, petitioner should note that neither 37 CFR §1.211(a)(1) nor 37 CFR § 1.138(c) recognizes a "conditional" declaration of express abandonment to avoid publication. In this instance, the petition filed December 4, 2002, was not filed timely to avoid publication of the instant application. As noted in MPEP § 711.01 (revision dated August 2001), "the petition will be denied when it is not recognized in time to avoid publication. Generally, a petition under 37 CFR 1.138(c) will not be granted and the application will be published in regular course unless such declaration of express abandonment and petition are received by the appropriate officials more than four weeks prior to the projected date of publication." The publication of the instant

application on January 9, 2003, effectively rendered moot both the initial petition filed December 4, 2002, and the subsequent request received December 30, 3002, withdrawing the petition filed earlier.

In view of the above, the notice of abandonment mailed June 18, 2007 is hereby **vacated**, the holding of abandonment is **withdrawn** and the application restored to **pending** status.

In accordance with this decision, this application is being referred to Technology Center GAU 3692 for examination in due course.

Telephone inquiries concerning this decision should be directed to Ramesh Krishnamurthy at (571) 272 - 4914.

David Bucci
Petitions Examiner
Office of Petitions

UNITED STATES PATENT AND TRADEMARK OFFICE

Commissioner for Patents
United States Patent and Trademark Office
P.O. Box 1450
Alexandria, VA 22313-1450
www.uspto.gov

GREER BURNS & CRAIN
300 S WACKER DR
25TH FLOOR
CHICAGO, IL 60606

COPY MAILED

AUG 0 5 2004

OFFICE OF PETITIONS

ON PETITION

In re Application of	:	
Jun Zou et al	:	
Application No. 10/154,447	:	
Filed: May 23, 2002	:	
Attorney Docket No. 1201.66556	:	

This is a decision on the petition, filed August 4, 2004, under 37 CFR 1.313(c)(2) to withdraw the above-identified application from issue after payment of the issue fee.

The petition is **GRANTED**.

The above-identified application is withdrawn from issue for consideration of a submission under 37 CFR 1.114 (request for continued examination). See 37 CFR 1.313(c)(2).

Petitioner is advised that the issue fee paid on June 21, 2004 in the above-identified application cannot be refunded. If, however, the above-identified application is again allowed, petitioner may request that it be applied towards the issue fee required by the new Notice of Allowance.[1]

Telephone inquiries should be directed to Wan Laymon at (703) 306-5685.

This matter is being referred to Technology Center AU 2832 for processing of the request for continued examination under 37 CFR 1.114 and for consideration of the concurrently filed Amendment.

Wan Laymon
Petitions Examiner
Office of Petitions
Office of the Deputy Commissioner
for Patent Examination Policy

---

[1] The request to apply the issue fee to the new Notice may be satisfied by completing and returning the new Issue Fee Transmittal Form PTOL-85(b), which includes the following language thereon: "Commissioner for Patents is requested to apply the Issue Fee and Publication Fee (if any) or re-apply any previously paid issue fee to the application identified above." Petitioner is advised that, whether a fee is indicated as being due or not, the Issue Fee Transmittal Form **must** be completed and timely submitted to avoid abandonment. Note the language in bold text on the first page of the Notice of Allowance and Fee(s) Due (PTOL-85).

fUNITED STATES PATENT AND TRADEMARK OFFICE

COMMISSIONER FOR PATENTS
UNITED STATES PATENT AND TRADEMARK OFFICE
P.O. BOX 1450
ALEXANDRIA, VA 22313-1450
WWW.USPTO.GOV

Paper No. None

GREER, BURNS & CRAIN
300 S WACKER DR
25TH FLOOR
CHICAGO IL 60606

COPY MAILED

JAN 19 2007

OFFICE OF PETITIONS

In re Application of Jun Zou et al. Application No. 10/154,447 In re Patent No. 6,922,127 Filing Date: May 23, 2002 Issue Date: July 26, 2005 Attorney Docket Number: 1201.66556 Title: RAISED ON-CHIP INDUCTOR AND METHOD OF MANUFACTURING SAME	DECISION ON PETITION UNDER 37 C.F.R. §3.81(B)

This is a decision on the petition filed February 23, 2006 pursuant to 37 C.F.R. §3.81(b)[1], to correct the Assignee's information on the Issue Fee Transmittal Form PTOL-85(b).

Petitioner requests that a Certificate of Correction be issued correcting the spelling of an assignee. Petitioner submits a "Certificate of Correction" for this purpose, which indicates that the spelling of the Assignee which appears on the face of the patent should be changed.

37 CFR 3.81(b), effective June 25, 2004, reads:

(b) After payment of the issue fee: Any request for issuance of an application in the name of the assignee submitted after the date of payment of the issue fee, and any request for a patent to be corrected to state the name of the assignee, must state that the assignment was submitted for recordation as set forth in 3.11 before issuance of the patent, and must include a request for a certificate of correction under 1.323 of this chapter (accompanied by the fee set forth in 1.20(a)) and the processing fee set forth in 1.17(i) of

1 See Official Gazette, June 22, 2004.

this chapter.

Office records show that the assignment for the above-identified application was received in the Office on September 3, 2002, which is prior to the payment of the Issue Fee on October 4, 2004.

The petition is **GRANTED**.

Payment of the required $130 processing fee and the required $100 certificate of correction fee is acknowledged.

The Certificates of Correction Branch will be notified of this decision so that the requested Certificate of Correction can be issued.

Telephone inquiries regarding *this decision* should be directed to the undersigned at (571) 272-3225. Any questions concerning the issuance of a certificate of correction should be directed to the Certificates of Correction Branch at (703) 305-8309.

Paul Shanoski
Senior Attorney
Office of Petitions
United States Patent and Trademark Office

UNITED STATES PATENT AND TRADEMARK OFFICE

COMMISSIONER FOR PATENTS
UNITED STATES PATENT AND TRADEMARK OFFICE
WASHINGTON, D.C. 20231
www.uspto.gov

Paper No. 05

BEYER WEAVER & THOMAS LLP
P.O. BOX 778
BERKELEY CA 94704-0778

JAN - 9 2003

In re Application of: :
Pei, *et al.* :
Application No. 10/154,449 :
Filed: May 21, 2002 :
Attny. Docket No. SRI1P048/US-4409-2 :

DECISION ON REQUEST TO WITHDRAW FROM RECORD

This is a decision on the communication, filed November 05, 2002. The communication is being treated as a request to withdraw as attorney of record under 37 C.F.R. § 1.36.

A grantable request to withdraw as attorney of record must be signed by every attorney seeking to withdraw or contain a clear indication that one attorney is signing on behalf of others. A request to withdraw will not be approved unless at least thirty (30) days would remain between the date of approval and the later of the expiration date of a time to file a response or the expiration date of the maximum time period that can be extended under 37 C.F.R. § 1.136(a).

The request meets all the above requirements. The request was signed by William Plut, an attorney with limited recognition under 37 C.F.R. § 10.9(b) in the above identified application.

The request is APPROVED

The attorneys of Beyer Weaver & Thomas, LLP, are identified in the Declaration and Power of Attorney, filed September 13, 2002, as having power of attorney and remain as attorneys of record.

All future communications from the Office will continue to be directed to the above-listed address until otherwise notified by applicant.

Inquiries related to this decision should be directed to Lissi Marquis at (703) 308-2260.

Lissi Mojica Marquis
Special Programs Examiner
Technology Center 2800
Semiconductors, Electrical and Optical
Systems and Components

PTO/SB/66 (03-09)
Approved for use through 03/31/2012. OMB 0651-0016
U.S. Patent and Trademark Office: U.S. DEPARTMENT OF COMMERCE
Under the Paperwork Reduction Act of 1995, no persons are required to respond to a collection of information unless it displays valid OMB control number.

PETITION TO ACCEPT UNINTENTIONALLY DELAYED PAYMENT OF MAINTENANCE FEE IN AN EXPIRED PATENT (37 CFR 1.378(c))

Patent Number	Issue Date (YYYY-MM-DD)	Application Number	Filing Date (YYYY-MM-DD)	Docket Number (if applicable)
6,941,614	2005-09-13	10154461	2002-05-23	

CAUTION: Maintenance fee (and surcharge, if any) payment must correctly identify: (1) the patent number and (2) the application number of the actual U.S. application leading to issuance of that patent to ensure the fee(s) is/are associated with the correct patent. 37 CFR 1.366(c) and (d).

SMALL ENTITY
☒ Patentee claims, or has previously claimed, small entity status. See 37 CFR 1.27.

LOSS OF ENTITLEMENT TO SMALL ENTITY STATUS
☐ Patentee is no longer entitled to small entity status. See 37 CFR 1.27(g)

NOT Small Entity			Small Entity		
	Fee	Code		Fee	Code
○	3 ½ year	(1551)	◉	3 ½ year	(2551)
○	7 ½ year	(1552)	○	7 ½ year	(2552)
○	11 ½ year	(1553)	○	11 ½ year	(2553)

SURCHARGE
The surcharge required by 37 CFR 1.20(i)(2) (Fee Code 1558) must be paid as a condition of accepting unintentionally delayed payment of the maintenance fee.

MAINTENANCE FEE (37 CFR 1.20(e)-(g))
The appropriate maintenance fee must be submitted with this petition.

STATEMENT
THE UNDERSIGNED CERTIFIES THAT THE DELAY IN PAYMENT OF THE MAINTENANCE FEE TO THIS PATENT WAS UNINTENTIONAL

PETITIONER(S) REQUEST THAT THE DELAYED PAYMENT OF THE MAINTENANCE FEE BE ACCEPTED AND THE PATENT REINSTATED

THIS PORTION MUST BE COMPLETED BY THE SIGNATORY OR SIGNATORIES

37 CFR 1.378(d) states: "Any petition under this section must be signed by an attorney or agent registered to practice before the Patent and Trademark Office, or by the patentee, the assignee, or other party in interest."

I certify, in accordance with 37 CFR 1.4(d)(4) that I am

◉ An attorney or agent registered to practice before the Patent and Trademark Office

○ A sole patentee

○ A joint patentee; I certify that I am authorized to sign this submission on behalf of all the other patentees.

○ A joint patentee; all of whom are signing this e-petition

○ The assignee of record of the entire interest

Patent Practitioner			
A signature of the applicant or representative is required in accordance with 37 CFR 1.33 and 10.18. Please see 37 CFR 1.4(d) for the form of the signature			
Signature	/47941/Debra G. Shoemaker/	Date (YYYY-MM-DD)	2010-01-20
Name	Debra G. Shoemaker	Registration Number	47941

This collection of information is required by 37 CFR 1.378(c). The information is required to obtain or retain a benefit by the public which is to file (and by the USPTO to process) an application. Confidentiality is governed by 35 U.S.C. 122 and 37 CFR 1.11 and 1.14. This collection is estimated to take 1 hour to complete, including gathering, preparing, and submitting the completed application form to the USPTO. Time will vary depending upon the individual case. Any comments on the amount of time you require to complete this form and/or suggestions for reducing this burden, should be sent to the Chief Information Officer, U.S. Patent and Trademark Office, U.S. Department of Commerce, P.O. Box 1450, Alexandria, VA 22313-1450. DO NOT SEND FEES OR COMPLETED FORMS TO THIS ADDRESS. **This form can only be used when in conjunction with EFS-Web. If this form is mailed to the USPTO, it may cause delays in reinstating the patent.**

Privacy Act Statement

The Privacy Act of 1974 (P.L. 93-579) requires that you be given certain information in connection with your submission of the attached form related to a patent application or patent. Accordingly, pursuant to the requirements of the Act, please be advised that: (1) the general authority for the collection of this information is 35 U.S.C. 2(b)(2); (2) furnishing of the information solicited is voluntary; and (3) the principal purpose for which the information is used by the U.S. Patent and Trademark Office is to process and/or examine your submission related to a patent application or patent. If you do not furnish the requested information, the U.S. Patent and Trademark Office may not be able to process and/or examine your submission, which may result in termination of proceedings or abandonment of the application or expiration of the patent.

The information provided by you in this form will be subject to the following routine uses:

1. The information on this form will be treated confidentially to the extent allowed under the Freedom of Information Act (5 U.S.C. 552) and the Privacy Act (5 U.S.C. 552a). Records from this system of records may be disclosed to the Department of Justice to determine whether the Freedom of Information Act requires disclosure of these records.

2. A record from this system of records may be disclosed, as a routine use, in the course of presenting evidence to a court, magistrate, or administrative tribunal, including disclosures to opposing counsel in the course of settlement negotiations.

3. A record in this system of records may be disclosed, as a routine use, to a Member of Congress submitting a request involving an individual, to whom the record pertains, when the individual has requested assistance from the Member with respect to the subject matter of the record.

4. A record in this system of records may be disclosed, as a routine use, to a contractor of the Agency having need for the information in order to perform a contract. Recipients of information shall be required to comply with the requirements of the Privacy Act of 1974, as amended, pursuant to 5 U.S.C. 552a(m).

5. A record related to an International Application filed under the Patent Cooperation Treaty in this system of records may be disclosed, as a routine use, to the International Bureau of the World Intellectual Property Organization, pursuant to the Patent Cooperation Treaty.

6. A record in this system of records may be disclosed, as a routine use, to another federal agency for purposes of National Security review (35 U.S.C. 181) and for review pursuant to the Atomic Energy Act (42 U.S.C. 218(c)).

7. A record from this system of records may be disclosed, as a routine use, to the Administrator, General Services, or his/her designee, during an inspection of records conducted by GSA as part of that agency's responsibility to recommend improvements in records management practices and programs, under authority of 44 U.S.C. 2904 and 2906. Such disclosure shall be made in accordance with the GSA regulations governing inspection of records for this purpose, and any other relevant (i.e., GSA or Commerce) directive. Such disclosure shall not be used to make determinations about individuals.

8. A record from this system of records may be disclosed, as a routine use, to the public after either publication of the application pursuant to 35 U.S.C. 122(b) or issuance of a patent pursuant to 35 U.S.C. 151. Further, a record may be disclosed, subject to the limitations of 37 CFR 1.14, as a routine use, to the public if the record was filed in an application which became abandoned or in which the proceedings were terminated and which application is referenced by either a published application, an application open to public inspections or an issued patent.

9. A record from this system of records may be disclosed, as a routine use, to a Federal, State, or local law enforcement agency, if the USPTO becomes aware of a violation or potential violation of law or regulation.

UNITED STATES PATENT AND TRADEMARK OFFICE

Commissioner for Patents
United States Patent and Trademark Office
P.O. Box 1450
Alexandria, VA 22313-1450
www.uspto.gov

In re Patent No. 6941614
Issue Date: September 13,2005
Application No. 10154461
Filed: May 23,2002
Attorney Docket No. MONT02-01

:
:DECISION GRANTING PETITION
:UNDER 37 CFR 1.378(c)
:

This is a decision on the electronic petition, filed January 20,2010 ,under 37 CFR 1.378(c) to accept the unintentionally delayed payment of the 3.5 year maintenance fee for the above-identified patent.

The petition is **GRANTED**.

The maintenance fee is accepted, and the above-identified patent reinstated as of January 20,2010 .
This decision also constitutes notice that the fee has been accepted. An electronic copy of the petition and this decision has been created as an entry in the Image File Wrapper. Nevertheless, petitioner should print and retain an independent copy.

Telephone inquiries related to this electronic decision should be directed to the Electronic Business Center at 1-866-217-9197.

UNITED STATES PATENT AND TRADEMARK OFFICE

Commissioner for Patents
United States Patent and Trademark Office
P.O. Box 1450
Alexandria, VA 22313-1450
www.uspto.gov

Paper No. 14

Fulbright & Jaworski
865 South Figueroa
Twenty-Ninth Floor
Los Angeles, CA 90017-2571

COPY MAILED

FEB 0 2 2004

OFFICE OF PETITIONS
ON PETITION

In re Application of :
Song Kim :
Application No. 10/154,493 :
Filed: May 23, 2002 :
Attorney Docket No. 7091-103D/10102873 :

This is a decision on the petition under 37 CFR 1.137(b), filed January 20, 2004, to revive the above-identified application.

The petition is granted.

The above-identified application became abandoned as a result of petitioner's failure to file an appeal brief (and fee required by 37 CFR 1.17(c)) within the time period provided in 37 CFR 1.192(a). As an appeal brief (and appeal brief fee) was not filed within two (2) months of the Notice of Appeal filed May 30, 2003, and no extensions of time under the provisions of 37 CFR 1.136(a) were obtained, the appeal was dismissed and the proceedings as to the rejected claims were terminated. See 37 CFR 1.192(b) & 1.197(c). As no claim was allowed, the-above-identified application became abandoned on July 30, 2003. See MPEP 1215.04.

37 CFR 1.137(b)(3) requires a statement that the entire delay in filing the required reply from the due date for the reply until the filing of a grantable petition pursuant to 37 CFR 1.137(b) was unintentional. Since the statement contained in the instant petition varies from the language required by 37 CFR 1.137(b)(3), the statement is being construed as the statement required by 37 CFR 1.137(b)(3) and petitioner must notify the Office if this is **not** a correct interpretation of the statement.

The application file is being forwarded to Technology Center AU 3644.

Telephone inquiries concerning this decision should be directed to Latrice Bond at (703) 308-6911.

Latrice Bond

Latrice Bond
Petitions Examiner
Office of Petitions
Office of the Deputy Commissioner
for Patent Examination Policy

UNITED STATES PATENT AND TRADEMARK OFFICE

COMMISSIONER FOR PATENTS
UNITED STATES PATENT AND TRADEMARK OFFICE
WASHINGTON, D.C. 20231
www.uspto.gov

Document No. 6

Marc R. Ascolese
CAMPBELL STEPHENSON ASCOLESE, LLP
4807 Spicewood Springs Rd.
Bldg. 4, Suite 201
Austin TX 78759

COPY MAILED

MAR 0 3 2003

OFFICE OF PETITIONS

In re Application of
Klug, et al.
Application No. 10/154,497
Filed: May 24, 2002
Attorney Docket No. M-9362 US

DECISION ON PETITION

This is a decision on the petition under 37 CFR 1.137(b) filed February 13, 2002, to revive the above-mentioned application.

The petition is **dismissed.**

Any request for reconsideration of this decision must be submitted within TWO (2) MONTHS from the mail date of this decision. Extensions of time under 37 CFR 1.136(a) are permitted. The reconsideration request should include a cover letter entitled "Renewed Petition" under 37 CFR 1.137(b)."

This application became abandoned on August 28, 2002, for failure to file a proper reply to the "Notice to File Missing Parts of a Nonprovisional Application" (the "Notice") mailed June 17, 2002, which set an extendable period for reply of two (2) months from its mailing date. The Notice advised that a proper oath or declaration was missing and that consequently a surcharge of $130.00 was also due. The Notice also required substitute drawings to be filed. No reply was received within the allowable period.

Effective December 1, 1997, the provisions of 37 CFR 1.137(b) now provide that where the delay in reply was unintentional, a petition may be filed to revive an abandoned application or a lapsed patent pursuant to 37 CFR 1.137(b). A grantable petition pursuant to 37 CFR 1.137(b) must be accompanied by:

(1) the required reply, unless previously filed. In a non-provisional application abandoned for failure to prosecute, the required reply may be met by the filing of a continuing application. In an application or patent, abandoned or lapsed for failure to pay the issue fee, or any portion thereof, the required reply must be the payment of the issue fee or any outstanding balance thereof.

(2) the petition fee as set forth in 37 CFR 1.17(m);

(3) a statement that the entire delay in filing the required reply from the due date for the reply until the filing of a grantable petition pursuant to 37 CFR 1.137(b) was unintentional. The Commissioner may require additional information where there is a question whether the delay was unintentional; and

(4) any terminal disclaimer (and fee set forth in 37 CFR 1.20(d)) required pursuant to 37 CFR 1.137(c).

The instant petition does not satisfy the requirements of item (1) above.

Substitute drawings were not found with the petition papers although required by the Notice. Any renewed petition filed must be accompanied by substitute drawings. If petitioner believes that the Notice was never received, petitioner may wish to consider a petition under 37 CFR 1.181 to withdraw the holding of abandonment. Section 711.03 of the Manual of Patent Examining Procedure provides further guidance in the requirements of a petition under 37 CFR 1.181.

For petitioner's convenience, a copy of the Notice mailed June 17, 2002, is enclosed.

Further correspondence with respect to this matter should be addressed as follows:

By mail: Assistant Commissioner for Patents
Box DAC
Washington, D.C. 20231

By facsimile: (703) 308-6916
Attn: Office of Petitions

By hand: Office of Petitions
2201 South Clark Place
Crystal Plaza 4, Suite 3C23
Arlington, VA 22202

Telephone inquiries concerning this decision should be directed to the undersigned at (703) 305-0010.

Kenya A. McLaughlin

Kenya A. McLaughlin
Petitions Attorney
Office of Petitions

Enclosure: Copy of "Notice to File Missing Parts of Nonprovisional Application"

UNITED STATES PATENT AND TRADEMARK OFFICE

COMMISSIONER FOR PATENTS
UNITED STATES PATENT AND TRADEMARK OFFICE
WASHINGTON, D.C. 20231
www.uspto.gov

Paper No. 10

Marc R. Ascolese
Campbell Stephenson Ascolese, LLP
4807 Spicewood Springs Road
Bldg. 4, Suite 201
Austin, TX 78759

COPY MAILED

APR 2 3 2003

OFFICE OF PETITIONS

In re Application of
Klug, et al.
Application No. 10/154,497
Filed: May 24, 2002
Attorney Docket No. M-9362US

DECISION ON PETITION

This is a decision on the renewed petition under 37 CFR § 1.137(b), filed March 28, 2003, to revive the above-identified application.

The renewed petition is **granted**.

This application became abandoned on August 28, 2002, for failure to file a proper reply to the "Notice to File Missing Parts of a Nonprovisional Application" (the "Notice") mailed June 17, 2002, which set an extendable period for reply of two (2) months from its mailing date. The Notice advised that a proper oath or declaration was missing and that consequently a surcharge of $130.00 was also due. The Notice also required substitute drawings to be filed. No reply was received within the allowable period. The application became abandoned on August 28, 2002. A petition under 37 CFR 1.137(b) was filed on February 13, 2003, but was dismissed by a decision mailed March 3, 2003. The instant renewed petition was then filed on March 28, 2003.

The substitute drawings and executed declaration filed March 28, 2003, are noted and made of record.

The application is being forward to the Office of Initial Patent Examination for further processing.

Telephone inquiries concerning this matter may be directed to the undersigned at (703) 305-0010.

Kenya A. McLaughlin
Petitions Attorney
Office of Petitions

UNITED STATES PATENT AND TRADEMARK OFFICE

Commissioner for Patents
United States Patent and Trademark Office
P.O. Box 1450
Alexandria, VA 22313-1450
www.uspto.gov

MINTZ LEVIN COHN FERRIS GLOVSKY & POPEO
ONE FINANCIAL CENTER
BOSTON, MA 02111

COPY MAILED

SEP 16 2009

OFFICE OF PETITIONS

In re Patent No. 6,902,921	:	
Issue Date: June 7, 2005	:	
Application No. 10/154,515	:	NOTICE
Filed: May 23, 2002	:	
Attorney Docket No.: 21465-504 CIP1 (C454-4 CI	:	

This is a notice regarding your request for acceptance of a fee deficiency submission under 37 CFR 1.28. The delay in responding is regretted, but the communication was recently referred to the undersigned for consideration.

The Office no longer investigates or rejects original or reissue patent under 37 CFR 1.56. **1098 Off. Gaz. Pat. Office 502 (January 3, 1989).** Therefore, nothing in this Notice is intended to imply that an investigation was done.

Your fee deficiency submission under 37 CFR 1.28 is hereby **ACCEPTED.**

This patent is no longer entitled to small entity status. Accordingly, all future fees paid in this patent must be paid at the large entity rate.

Inquiries related to this communication should be directed to the undersigned at (571) 272-3204.

Sherry D. Brinkley
Petitions Examiner
Office of Petitions

UNITED STATES PATENT AND TRADEMARK OFFICE

Commissioner for Patents
United States Patent and Trademark Office
P.O. Box 1450
Alexandria, VA 22313-1450
www.uspto.gov

LACKENBACH SIEGEL, LLP
LACKENBACH SIEGEL BUILDING
1 CHASE ROAD
SCARSDALE, NY 10583

COPY MAILED

MAR 1 6 2007

OFFICE OF PETITIONS

In re Application of :
Carme Balliu Falgueras :
Application No. 10/154,527 :
Filed: May 23, 2002 :
Attorney Docket No. ISERN.P-92 :

DECISION GRANTING PETITION
UNDER 37 CFR 1.55(c)

This is a decision on the petition under 37 CFR 1.55(c), filed December 13, 2006, to accept an unintentionally delayed claim under 35 U.S.C. § 119(a)-(d) for the benefit of priority to foreign Spanish Application No. P200101208, filed May 25, 2001.

The petition is **GRANTED**.

This pending nonprovisional application was filed after November 29, 2000, and did not include a reference to the foreign application, for which benefit is now sought, within the later of four months from the actual filing date of the application or sixteen months from the filing date of the prior foreign application. Since the claim for priority is submitted after the period specified in 37 CFR 1.55(a)(1)(i), this is an appropriate petition under the provisions of 37 CFR 1.55(c).

A petition under 37 CFR 1.55(c) to accept an unintentionally delayed claim for priority requires:

(1) The nonprovisional application claiming the benefit of an earlier filing date must be filed on or after November 29, 2000;

(2) the claim submitted with the petition must identify the prior foreign application for which priority is claimed, as well as any foreign application for the same subject matter and having a filing date before that of the application for which priority is claimed, by the application number, country, and the filing date and be included either in an oath or declaration (37 CFR 1.63(c)(2)) or in an Application Data Sheet (37 CFR 1.76(b)(6);

(3) the surcharge as set forth in 37 CFR 1.17(t);

(4) a statement that the entire delay between the date the claim was due under 37 CFR 1.55(a)(1) and the date the claim was filed was unintentional. (The Director may require additional information where there is a question whether the delay was unintentional.); and

(5) the above-identified nonprovisional application must be filed within 12 months of the filing date of the foreign application.

This application was filed on May 23, 2002, which is after November 29, 2000 and within 12 months of May 25, 2001 (the filing date of the foreign application to which benefit is now being claimed). On December 13, 2006, an executed oath/declaration was received which identifies the foreign application for which priority is claimed by application number, country and filing date. The required petition fee of $1,370 was received with the petition. Lastly, petitioner has provided an adequate statement of unintentional delay.

All of the above requirements having been satisfied, the late claim for priority under 35 U.S.C. § 119(a)-(d) is accepted as being unintentionally delayed.

The granting of the petition to accept the delayed benefit claim to the prior-filed application under 37 CFR 1.55(c) should not be construed as meaning that this application is entitled to the benefit of the prior-filed application. In order for this application to be entitled to the benefit of the prior-filed application, all other requirements under 35 U.S.C. § 119(a)-(d) and 37 CFR 1.55(a)(1) must be met. Similarly, the fact that the corrected Filing Receipt accompanying this decision on petition includes the prior-filed application should not be construed as meaning that applicant is entitled to the claim for benefit of priority to the prior-filed application noted thereon. Accordingly, the examiner will, in due course, consider this benefit claim and determine whether this application is entitled to the benefit of the earlier filing date.

A corrected Filing Receipt, which includes the priority claim to the prior-filed foreign application, accompanies this decision on petition.

This application is being referred to Technology Center AU 3636 for examination in due course and for consideration by the examiner of record of the foreign priority claim under 35 U.S.C. § 119(a)-(d).

Any inquiries directly pertaining to this matter may be directed to Sherry D. Brinkley at (571) 272-3204 .

Sherry D. Brinkley
Petitions Examiner
Office of Petitions

Frances M. Hicks
Lead, Petitions Examiner
Office of Petitions

ATTACHMENT: Corrected Filing Receipt

UNITED STATES PATENT AND TRADEMARK OFFICE

COMMISSIONER FOR PATENTS
UNITED STATES PATENT AND TRADEMARK OFFICE
P.O. BOX 1450
ALEXANDRIA, VA 22313-1450
www.uspto.gov

APPLIED MATERIALS, INC.
2881 SCOTT BLVD. M/S 2061
SANTA CLARA, CA 95050

COPY MAILED

JUN 22 2005

OFFICE OF PETITIONS

In re Application of
Igor Petrov, et al
Application No. 10/154,530
Filed: May 22, 2002
Attorney Docket No. PDC/CD/5810

ON PETITION

This is a decision on the petition, filed March 29, 2005, to revive the above-identified application under the provisions of 37 CFR 1.137(b).

There is no indication that the person signing the instant petition was ever given a power of attorney or authorization of agent to prosecute the above-identified application. However, in accordance with 37 CFR 1.34(a), the signature of Terek N. Fahmi appearing on the petition shall constitute a representation to the United States Patent and Trademark Office that he is authorized to represent the particular party on whose behalf he acts. A courtesy copy of this decision is being mailed to petitioner. However, if Mr. Fahmi desires to receive future correspondence regarding this application, the appropriate power of attorney or authorization of agent must be submitted. All future correspondence regarding this application file will be directed solely to the address of record.

The application became abandoned for failure to reply in a timely manner to an Office action mailed January 5, 2004. A Notice of Abandonment was mailed on July 13, 2004. On March 29, 2005, the present petition, *inter alia*, was filed.

37 CFR 1.137(b)(3) requires a statement that the entire delay in filing the required reply from the due date for the reply until the filing of a grantable petition pursuant to 37 CFR 1.137(b) was unintentional. While it is not apparent whether the person signing the statement of unintentional delay was in a position to have firsthand or direct knowledge of the facts and circumstances of the delay at issue, such statement is being treated as having been made as the result of a reasonable inquiry into the facts and circumstances of such delay. See 37 CFR 10.18(b) and Changes to Patent Practice and Procedure; Final Rule Notice, 62 Fed. Reg. 53131, 53178 (October 10, 1997), 1203 Off. Gaz. Pat. Office 63, 103 (October 21, 1997). In the event that such an inquiry has not been made, petitioner must make such an inquiry. If such inquiry results in the discovery that it is not correct that the entire delay in filing the required reply from the due date for the reply until the filing of a grantable petition pursuant to 37 CFR 1.137(b) was unintentional, petitioner must notify the Office.

The petition is **GRANTED**.

Telephone inquiries concerning this decision may be directed to the undersigned at (571) 272-3204. All other inquiries regarding this application should be directed to the Technology Center.

The application file is being referred to Technology Center AU 2881 for consideration of the response filed March 29, 2005.

Sherry D. Brinkley
Petitions Examiner
Office of Petitions

cc: TAREK N. FAHMI
BLAKELY SOKOLOFF TAYLOR & ZAFMAN
12400 WILSHIRE BOULEVARD
SEVENTH FLOOR
LOS ANGELES, CA 90025-1030

UNITED STATES PATENT AND TRADEMARK OFFICE

Commissioner for Patents
United States Patent and Trademark Office
P.O. Box 1450
Alexandria, VA 22313-1450
www.uspto.gov

APPLIED MATERIALS, INC.
2881 SCOTT BLVD. M/S 2061
SANTA CLARA CA 95050

COPY MAILED

MAR 24 2006

OFFICE OF PETITIONS

In re Application of	:	
Shan et al.	:	
Application No. 10/154,532	:	ON PETITION
Filed: May 22, 2002	:	
Attorney Docket No. Applied07	:	
(006552USA/ETCH/DRIE/JB1)		

This is a decision on the petition under 37 C.F.R. § 1.137(b), filed February 1, 2006, to revive the above-identified application.

The petition is **GRANTED.**

The petition satisfies the conditions for revival pursuant to the provisions of 37 CFR 1.137(b) in that (1) the reply in the form of an RCE and an Amendment; (2) the petition fee; and (3) the required statement of unintentional delay have been received. Accordingly, the response has been accepted as having been unintentionally delayed.

The file does not indicate a change of address has been submitted, although the address given on the petition differs from the address of record. If appropriate, a request to change the address of record should be filed. A courtesy copy of this decision is being mailed to the address given on the petition; however, the Office will mail all future correspondence solely to the address of record.

This matter is being referred to Technology Center 2800 for processing of the Request for Continued Examination under 37 CFR 1.114 filed with the instant petition.

Telephone inquiries regarding this decision should be directed to the undersigned at (571) 272-3282.

Liana Chase
Petitions Examiner
Office of Petitions

Cc: MICHAELSON AND ASSOCIATES
PARKWAY 109 OFFICE CENTER
328 NEWMAN SPRINGS RD
P O BOX 8489
RED BANK, NJ 07701

UNITED STATES PATENT AND TRADEMARK OFFICE

Commissioner for Patents
United States Patent and Trademark Office
P.O. Box 1450
Alexandria, VA 22313-1450
www.uspto.gov

FISH & RICHARDSON PC
P.O. BOX 1022
MINNEAPOLIS MN 55440-1022

COPY MAILED
OCT 17 2006
OFFICE OF PETITIONS

In re Patent No. 6,930,277	:	
Issue Date: 16 August, 2005	:	DECISION ON PETITION
Application No. 10/154,539	:	UNDER 37 CFR 1.78(a)(6)
Filed: 24 May, 2002	:	
Attorney Docket No. 05918-173002/4280	:	

This is a decision on the petition filed on 22 May, 2006, under 37 CFR 1.78(a)(3) to accept an unintentionally delayed claim under 35 U.S.C. § 120 for the benefit of priority to a prior-filed nonprovisional application.

The petition is **DISMISSED.**

The petition seeks acceptance of a late claim for priority to a prior-filed application.

The petition is not properly signed in accordance with 37 CFR 1.4. The petition appears to have been signed on behalf of an assignee. In order to request or take action in a patent or trademark matter, an assignee must establish its ownership of the patent or trademark property to the satisfaction of the Director. As such, petitioner should submit a renewed petition complying with the provisions of 37 CFR 3.73(b). The enclosed statement under 37 CFR 3.73(b) should be used if the renewed petition is signed by the assignee.

It is noted that this application issued as a patent prior to the filing of the petition under 37 C.F.R. §1.78(a)(3). Therefore, submission of a certificate of correction (along with the $100 fee) will be required as a condition for granting the petition under 37 C.F.R. §1.78(a)(3).

Accordingly, before the petition under 37 CFR 1.78(a)(3) can be granted, a renewed, properly-signed petition under 37 CFR 1.78(a)(3), a Certificate of Correction, and $100 fee as noted above, are required.

Further correspondence with respect to this matter should be addressed as follows:

By mail: Mail Stop PETITIONS
Commissioner for Patents
Post Office Box 1450
Alexandria, VA 22313-1450

By hand: Customer Service Window
Mail Stop Petitions
Randolph Building
401 Dulany Street
Alexandria, VA 22314

By fax: (571) 273-8300
ATTN: Office of Petitions

Any questions concerning this matter may be directed to Senior Petitions Attorney Douglas I. Wood at (571) 272-3231.

Frances Hicks
Lead Paralegal
Office of Petitions

Encl: Statement under 37 CFR 3.73(b)

PTO/SB/96 (09-06)
Approved for use through 03/31/2007. OMB 0651-0031
U.S. Patent and Trademark Office; U.S. DEPARTMENT OF COMMERCE
Under the Paperwork Reduction Act of 1995, no persons are required to respond to a collection of information unless it displays a valid OMB control number.

STATEMENT UNDER 37 CFR 3.73(b)

Applicant/Patent Owner: _____

Application No./Patent No.: _____ Filed/Issue Date: _____

Entitled:

_____, a _____
(Name of Assignee) (Type of Assignee, e.g., corporation, partnership, university, government agency, etc.)

states that it is:

1. ☐ the assignee of the entire right, title, and interest; or

2. ☐ an assignee of less than the entire right, title and interest
(The extent (by percentage) of its ownership interest is _____%)

in the patent application/patent identified above by virtue of either:

A. ☐ An assignment from the inventor(s) of the patent application/patent identified above. The assignment was recorded in the United States Patent and Trademark Office at Reel _____, Frame _____, or for which a copy thereof is attached.

OR

B. ☐ A chain of title from the inventor(s), of the patent application/patent identified above, to the current assignee as follows:

1. From: _____ To: _____
The document was recorded in the United States Patent and Trademark Office at
Reel _____, Frame _____, or for which a copy thereof is attached.

2. From: _____ To: _____
The document was recorded in the United States Patent and Trademark Office at
Reel _____, Frame _____, or for which a copy thereof is attached.

3. From: _____ To: _____
The document was recorded in the United States Patent and Trademark Office at
Reel _____, Frame _____, or for which a copy thereof is attached.

☐ Additional documents in the chain of title are listed on a supplemental sheet.

☐ As required by 37 CFR 3.73(b)(1)(i), the documentary evidence of the chain of title from the original owner to the assignee was, or concurrently is being, submitted for recordation pursuant to 37 CFR 3.11.

[NOTE: A separate copy (*i.e.*, a true copy of the original assignment document(s)) must be submitted to Assignment Division in accordance with 37 CFR Part 3, to record the assignment in the records of the USPTO. See MPEP 302.08]

The undersigned (whose title is supplied below) is authorized to act on behalf of the assignee.

Signature	Date
Printed or Typed Name	Telephone Number
Title	

This collection of information is required by 37 CFR 3.73(b). The information is required to obtain or retain a benefit by the public which is to file (and by the USPTO to process) an application. Confidentiality is governed by 35 U.S.C. 122 and 37 CFR 1.11 and 1.14. This collection is estimated to take 12 minutes to complete, including gathering, preparing, and submitting the completed application form to the USPTO. Time will vary depending upon the individual case. Any comments on the amount of time you require to complete this form and/or suggestions for reducing this burden, should be sent to the Chief Information Officer, U.S. Patent and Trademark Office, U.S. Department of Commerce, P.O. Box 1450, Alexandria, VA 22313-1450. DO NOT SEND FEES OR COMPLETED FORMS TO THIS ADDRESS. SEND TO: **Commissioner for Patents, P.O. Box 1450, Alexandria, VA 22313-1450.**

If you need assistance in completing the form, call 1-800-PTO-9199 and select option 2.

Privacy Act Statement

The **Privacy Act of 1974 (P.L. 93-579)** requires that you be given certain information in connection with your submission of the attached form related to a patent application or patent. Accordingly, pursuant to the requirements of the Act, please be advised that: (1) the general authority for the collection of this information is 35 U.S.C. 2(b)(2); (2) furnishing of the information solicited is voluntary; and (3) the principal purpose for which the information is used by the U.S. Patent and Trademark Office is to process and/or examine your submission related to a patent application or patent. If you do not furnish the requested information, the U.S. Patent and Trademark Office may not be able to process and/or examine your submission, which may result in termination of proceedings or abandonment of the application or expiration of the patent.

The information provided by you in this form will be subject to the following routine uses:

1. The information on this form will be treated confidentially to the extent allowed under the Freedom of Information Act (5 U.S.C. 552) and the Privacy Act (5 U.S.C 552a). Records from this system of records may be disclosed to the Department of Justice to determine whether disclosure of these records is required by the Freedom of Information Act.
2. A record from this system of records may be disclosed, as a routine use, in the course of presenting evidence to a court, magistrate, or administrative tribunal, including disclosures to opposing counsel in the course of settlement negotiations.
3. A record in this system of records may be disclosed, as a routine use, to a Member of Congress submitting a request involving an individual, to whom the record pertains, when the individual has requested assistance from the Member with respect to the subject matter of the record.
4. A record in this system of records may be disclosed, as a routine use, to a contractor of the Agency having need for the information in order to perform a contract. Recipients of information shall be required to comply with the requirements of the Privacy Act of 1974, as amended, pursuant to 5 U.S.C. 552a(m).
5. A record related to an International Application filed under the Patent Cooperation Treaty in this system of records may be disclosed, as a routine use, to the International Bureau of the World Intellectual Property Organization, pursuant to the Patent Cooperation Treaty.
6. A record in this system of records may be disclosed, as a routine use, to another federal agency for purposes of National Security review (35 U.S.C. 181) and for review pursuant to the Atomic Energy Act (42 U.S.C. 218(c)).
7. A record from this system of records may be disclosed, as a routine use, to the Administrator, General Services, or his/her designee, during an inspection of records conducted by GSA as part of that agency's responsibility to recommend improvements in records management practices and programs, under authority of 44 U.S.C. 2904 and 2906. Such disclosure shall be made in accordance with the GSA regulations governing inspection of records for this purpose, and any other relevant (*i.e.*, GSA or Commerce) directive. Such disclosure shall not be used to make determinations about individuals.
8. A record from this system of records may be disclosed, as a routine use, to the public after either publication of the application pursuant to 35 U.S.C. 122(b) or issuance of a patent pursuant to 35 U.S.C. 151. Further, a record may be disclosed, subject to the limitations of 37 CFR 1.14, as a routine use, to the public if the record was filed in an application which became abandoned or in which the proceedings were terminated and which application is referenced by either a published application, an application open to public inspection or an issued patent.
9. A record from this system of records may be disclosed, as a routine use, to a Federal, State, or local law enforcement agency, if the USPTO becomes aware of a violation or potential violation of law or regulation.

UNITED STATES PATENT AND TRADEMARK OFFICE

Commissioner for Patents
United States Patent and Trademark Office
P.O. Box 1450
Alexandria, VA 22313-1450
www.uspto.gov

KLEIN, O'NEILL & SINGH
2 PARK PLAZA
SUITE 510
IRVINE CA 92614

COPY MAILED

JUL 07 2005

OFFICE OF PETITIONS

In re Application of	:
Harvey Brody	:
Application No. 10/154,545	: DECISION GRANTING PETITION
Filed: May 24, 2002	: UNDER 37 CFR 1.137(b)
Attorney Docket No. 297-21-PA	:

This is a decision on the petition under 37 CFR 1.137(b), filed April 28, 2005, to revive the above-identified application.

The petition is **GRANTED**.

The petition satisfies the conditions for revival pursuant to the provisions of 37 CFR 1.137(b) in that (1) the reply in the form of an amendment; (2) the petition fee; and (3) the required statement of unintentional delay have been received. Accordingly, the reply to the nonfinal Office action of May 14, 2004, is accepted as having been unintentionally delayed.

Telephone inquiries concerning this decision should be directed to the undersigned at (571) 272-3208.

This matter is being referred to Technology Center AU 3754.

Karen Creasy

Karen Creasy
Petitions Examiner
Office of Petitions
Office of the Deputy Commissioner
for Patent Examination Policy

UNITED STATES PATENT AND TRADEMARK OFFICE

Commissioner for Patents
United States Patent and Trademark Office
P.O. Box 1450
Alexandria, VA 22313-1450
www.uspto.gov

CALIPER LIFE SCIENCES, INC.
605 FAIRCHILD DRIVE
MOUNTAIN VIEW, CA 94043-2234

COPY MAILED

MAY 22 2006

OFFICE OF PETITIONS

In re Application of	:
Robert S. Dubrow	: DECISION ON PETITION
Application No. 10/154,557	: UNDER 37 CFR 1.137(b)
Filed: May 24, 2002	:
Attorney Docket No. 100/02940	:

This is a decision on the petition under 37 CFR 1.137(b), filed March 1, 2006, to revive the above-identified application.

The petition is **granted**.

This application became abandoned for failure to timely pay the issue and publication fees on or before January 13, 2006 as required by the Notice of Allowance and Fee(s) Due, mailed October 13, 2005.

The petition satisfies the requirements for a grantable petition in that the reply in the form of payment of the $1,400 issue fee and $300 publication fee; the petition fee of $1,500; and the required statement of unintentional delay have been submitted. Accordingly, the issue and publication fees are accepted as having been unintentionally delayed.

Inquiries related to this communication should be directed to the undersigned at (571) 272-3218.

This matter is being referred to Publishing Division.

Frances Hicks
Petitions Examiner
Office of Petitions

MAILED
FROM DIRECTORS OFFICE

APR 0 4 2006

TECHNOLOGY CENTER 3600

2164

OIPE JC182
APR 1 8 2005
PATENT & TRADEMARK OFFICE

Docket No.: C43186/131783

IN THE UNITED STATES PATENT AND TRADEMARK OFFICE

In re U.S. Patent Application Serial No. 10/154,562	)	
	)	
Filing Date: May 24, 2002	)	Examiner: To be assigned
	)	
Inventor: Scott Matthews	)	Group Art Unit: 2164
	)	
For: CARD BASED TRANSFER ACCOUNT	)	

APPROVED
4/4/06

WITHDRAWAL AS ATTORNEYS OF RECORD

Commissioner for Patents
P.O. Box 1450
Alexandria, VA 22313-1450

Sir:

In accordance with 37 CFR §§ 1.36 and 10.40(b) and MPEP § 402.06, undersigned counsel hereby notifies the USPTO that, by mutual agreement with the owner of the application, the undersigned and all of the other Bryan Cave LLP attorneys of record in this application no longer have any responsibility in this matter and must officially withdraw from all further responsibility with respect to it. In accordance with 37 CFR §§ 1.31 and 1.34, undersigned counsel, being a member of the firm of Bryan Cave LLP, has authority to file this paper with the USPTO on behalf of all of the other Bryan Cave LLP attorneys of record in this application. To the best of undersigned's knowledge, there is no action that needs to be taken with respect to this application.

Please treat this paper as a petition, if necessary. Also, it is not believed that this papers requires any fee, but if any is required, please charge it to Deposit Account No. 02-4467.

This paper is being submitted in triplicate (original and two photocopies).

There will be at least thirty days between the filing of this paper and of any necessary approval by the USPTO, on the one hand, and the expiration of the time for taking further action, on the other hand, because there is currently no action that needs to be taken with respect to this application (MPEP § 402.06).

Mr. Philip Colasuonno has indicated to us that he is now owner of all right, title, and interest in and to the application. One copy of this paper is being forwarded to him at his business address, which is Philip Colasuonno & Company, 415 Huguenot Street, New Rochelle, NY 10801. All further correspondence from the USPTO concerning this application should be sent to him and that address.

I hereby certify that this correspondence is being deposited with the United States Postal Service as first class mail in an envelope addressed to:

Commissioner for Patents
P.O. Box 1450
Alexandria, VA 22313-1450

on 4/13/05
(Date of Deposit)

Stephen P. Gilbert
Name of applicant, assignee, or registered representative

Stephen P. Gilbert
Signature

4/13/05
Date of Signature

Respectfully submitted,

Stephen P. Gilbert

Stephen P. Gilbert
Registration No. 27,893

BRYAN CAVE LLP
1290 Avenue of the Americas
New York, New York 10104
phone: 212-541-1236
fax: 212-541-4630

UNITED STATES PATENT AND TRADEMARK OFFICE

Commissioner for Patents
United States Patent and Trademark Office
P.O. Box 1450
Alexandria, VA 22313-1450
www.uspto.gov

WOOD, HERRON, & EVANS, LLP
2700 Carew Tower
441 Vine Street
Cincinnati, OH 45202

MAILED

JUN 19 2009

OFFICE OF PETITIONS

In re Application of	:	
Scott MATTHEWS	:	
Application No. 10/154,562	:	ON PETITION
Filed: May 24, 2002	:	
Attorney Docket No. DAND-03	:	

This is a decision on the petition under the unintentional provisions of 37 CFR 1.137(b), filed February 23, 2009, to revive the above-identified application.

The petition is **GRANTED**.

The application became abandoned for failure to timely file a reply within the meaning of 37 CFR 1.113 to the final Office action of February 11, 2008. The proposed reply required for consideration of a petition to revive must be a Notice of Appeal (and appeal fee required by 37 CFR 41.20(b)(2), an amendment that *prima facie* places the application in condition for allowance, a Request for Continued Examination and submission (37 CFR 1.114), or the filing of a continuing application under 37 CFR 1.53(b). See MPEP 711.03(c)(III)(A)(2). No extensions of time pursuant to the provisions of 37 CFR 1.136(a) were obtained. Accordingly, the date of abandonment of this application is May 12, 2008.

The petition satisfies the requirements of 37 CFR 1.137(b) in that petitioner has supplied (1) the reply in the form of a Request for Continued Examination (RCE) and fee of $405.00, and the submission required by 37 CFR 1.114; (2) the petition fee of $810.00; and (3) a proper statement of unintentional delay.

It is not apparent whether the person signing the statement of unintentional delay was in a position to have firsthand or direct knowledge of the facts and circumstances of the delay at issue. Nevertheless, such statement is being treated as having been made as the result of a

reasonable inquiry into the facts and circumstances of such delay. See 37 CFR 10.18(b) and Changes to Patent Practice and Procedure; Final Rule Notice, 62 Fed. Reg. 53131, 53178 (October 10, 1997), 1203 Off. Gaz. Pat. Office 63, 103 (October 21, 1997). In the event that such an inquiry has not been made, petitioner must make such an inquiry. If such inquiry results in the discovery that it is not correct that the entire delay in filing the require ed reply from the due date for the reply until the filing of a grantable petition pursuant to 37 CFR 1.137(b) was unintentional, petitioner must notify the Office.

This application is being referred to Technology Center AU 3692 for processing of the RCE and for appropriate action by the Examiner in the normal course of business on the amendment submitted in accordance with 37 CFR 1.114.

Telephone inquiries concerning this decision should be directed to the undersigned at (571) 272-0602.

Thurman K. Page
Petitions Examiner
Office of Petitions

UNITED STATES PATENT AND TRADEMARK OFFICE

COMMISSIONER FOR PATENTS
UNITED STATES PATENT AND TRADEMARK OFFICE
WASHINGTON, D.C. 20231
www.uspto.gov

Paper No. 7

Wolff & Samson
5 Becker Farm Road
Roseland NJ 07068-1776

COPY MAILED

DEC 0 6 2002

OFFICE OF PETITIONS

In re Application of
Sigel et al.
Application No. 10/154,572
Filed: May 23, 2002
Attorney Docket No.7557/16

DECISION GRANTING PETITION

This is a decision on the petition under 37 CFR 1.10(d), filed September 30, 2002, requesting that the above-identified application be accorded a filing date of May 23, 2002, rather than the presently accorded filing date of May 13, 2002.

Petitioner alleges that the application was deposited in Express Mail service on May 23, 2002. The petition is accompanied by a copy of Express Mail label No. EL548969469US. Although the "date-in" indicated on the Express Mail label is May 13, 2002, the label contains a United States Postal Service (USPS) stamp of May 23, 2002. The same Express Mail label number was placed on the original application papers located in the official file.

In view of the above, the petition is **granted**. No petition fee is necessary.

This application file will be forwarded to the Office of Initial Patent Examination for correction of the filing date to May 23, 2002, and the mailing of a corrected filing receipt.

Telephone inquiries should be directed to the undersigned at (703) 306-5589.

Christina Tartera Donnell

Christina Tartera Donnell
Senior Petitions Attorney
Office of Petitions
Office of the Deputy Commissioner
for Patent Examination Policy

SPE RESPONSE FOR CERTIFICATE OF CORRECTION

Paper No.: _____

DATE : August 18, 2006

TO SPE OF : ART UNIT 2874

SUBJECT : Request for Certificate of Correction for Appl. No.: 10/154572 Patent No.: 6,970,630 B2

Please respond to this request for a certificate of correction within 7 days.

Please review the requested changes/corrections as shown in the **COCIN** document(s) in the IFW application image. No new matter should be introduced, nor should the scope or meaning of the claims be changed.

Please complete the response (see below) and forward the completed response to scanning using document code **COCX**.

Elisha Evans

Certificates of Correction Branch

703-308-9390 ext. 110

Thank You For Your Assistance

The request for issuing the above-identified correction(s) is hereby:

Note your decision on the appropriate box.

- ☒ **Approved** — **All** changes apply.
- ☐ **Approved in Part** — Specify below which changes **do not** apply.
- ☐ **Denied** — State the reasons for denial below.

Comments: All changes Approved - JTR

SPE

2874

Art Unit

UNITED STATES PATENT AND TRADEMARK OFFICE

Commissioner for Patents
United States Patent and Trademark Office
P.O. Box 1450
Alexandria, VA 22313-1450
www.uspto.gov

ORRICK, HERRINGTON & SUTCLIFFE, LLP
IP PROSECUTION DEPARTMENT
4 PARK PLAZA
SUITE 1600
IRVINE CA 92614-2558

COPY MAILED

APR 16 2009

OFFICE OF PETITIONS

In re Application of	:	
Charles W. Dickerson	:	
Application No.: 10/154590	:	DECISION ON
Filing or 371(c) Date: 05/22/2002	:	PETITION
Attorney Docket Number: 273/062	:	

This is a decision in response to the "Petition to Withdraw Holding of Abandonment 37 CFR 1.181(a), filed March 6, 2009.

This Petition is hereby **dismissed**.

Any further petition must be submitted within TWO (2) MONTHS from the mail date of this decision. Extensions of time under 37 CFR 1.136(a) are permitted. The reconsideration request should include a cover letter entitled "Renewed Petition under [insert the applicable code section]." This is **not** final agency action within the meaning of 5 U.S.C. § 704.

The above-identified application became abandoned for failure to timely and properly reply to the final Office action, mailed May 14, 2008. The Notice set a three (3) month period for reply. No reply having been received, the application became abandoned on August 15, 2008. A Notice of Abandonment was mailed January 6, 2009.

Applicant files the present petition and states that"Applicant became aware of the Abandonment upon receipt of the Notice of Abandonment mailed January 6, 2009."

Applicable Law, Rules and MPEP

The MPEP 711.03(c)A, Petition To Withdraw Holding of Abandonment Based on Failure To Receive Office Action, provides

> In Delgar v. Schulyer, 172 USPQ 513 (D.D.C. 1971), the court decided that the Office should mail a new Notice of Allowance in view of the evidence presented in support of the contention that the applicant's representative did not receive the original Notice of Allowance. Under the reasoning of Delgar, an allegation that an Office action was never received may be considered in a petition to withdraw the holding of

abandonment. If adequately supported, the Office may grant the petition to withdraw the holding of abandonment and remail the Office action. That is, the reasoning of Delgar is applicable regardless of whether an application is held abandoned for failure to timely pay the issue fee (35 U.S.C. 151) or for failure to prosecute (35 U.S.C. 133).

To minimize costs and burdens to practitioners and the Office, the Office has modified the showing required to establish nonreceipt of an Office action. The showing required to establish nonreceipt of an Office communication must include a statement from the practitioner describing the system used for recording an Office action received at the correspondence address of record with the USPTO. The statement should establish that the docketing system is sufficiently reliable. It is expected that the record would include, but not be limited to, the application number, attorney docket number, the mail date of the Office action and the due date for the response.

Practitioner must state that the Office action was not received at the correspondence address of record, and that a search of the practitioner's record(s), including any file jacket or the equivalent, and the application contents, indicates that the Office action was not received. A copy of the record(s) used by the practitioner where the non-received Office action would have been entered had it been received is required.

A copy of the practitioner's record(s) required to show non-receipt of the Office action should include the master docket for the firm. That is, if a three month period for reply was set in the nonreceived Office action, a copy of the master docket report showing all replies docketed for a date three months from the mail date of the nonreceived Office action must be submitted as documentary proof of nonreceipt of the Office action. If no such master docket exists, the practitioner should so state and provide other evidence such as, but not limited to, the following: the application file jacket; incoming mail log; calendar; reminder system; or the individual docket record for the application in question.

The showing outlined above may not be sufficient if there are circumstances that point to a conclusion that the Office action may have been lost after receipt rather than a conclusion that the Office action was lost in the mail (e.g., if the practitioner has a history of not receiving Office actions). (Emphasis supplied).

Analysis/conclusion

Regrettably, the petition is not grantable at this time. The Office requires a statement from the practitioner describing the system used for recording an Office action received at the correspondence address of record with the USPTO. The statement should establish that the docketing system is sufficiently reliable. In addition, a copy of the practitioner's record(s) required to show non-receipt of the Office action should include the master docket for the firm. That is, if a three month period for reply was set in the nonreceived Office action, a copy of the master docket report showing all replies docketed for a date three months from the mail date of the nonreceived Office action must be submitted as documentary proof of nonreceipt of the Office action. If no such master docket exists, the practitioner should so state and provide other evidence such as, but not limited to, the following: the application file jacket; incoming mail log; calendar; reminder system; or the individual docket record for the application in question.

The petition is dismissed without prejudice. Applicant should file a Request for Reconsideration of Petition and include the necessary statements and/or copies of docket records and file jacket.

Alternate venue

Applicant may file a petition stating that the delay was unintentional. Public Law 97-247, § 3, 96 Stat. 317 (1982), which revised patent and trademark fees, amended 35 U.S.C. § 41(a)(7) to provide for the revival of an "unintentionally" abandoned application without a showing that the delay in was "unavoidable." An "unintentional" petition under 37 CFR 1.137(b) must be accompanied by the required fee.

The filing of a petition under 37 CFR 1.137(b) cannot be intentionally delayed and therefore must be filed promptly. A person seeking revival due to unintentional delay can not make a statement that the delay was unintentional unless the entire delay, including the delay from the date it was discovered that the application was abandoned until the filing of the petition to revive under 37 CFR 1.137(b), was unintentional. A statement that the delay was unintentional is not appropriate if petitioner intentionally delayed the filing of a petition for revive under 37 CFR 1.137(b).
Further correspondence with respect to this matter should be addressed as follows:

By mail: Director for Patents
PO Box 1450
Alexandria, VA 22313-1450

By FAX: (571) 273-8300
Attn: Office of Petitions

By hand: Customer Service Window
Randolph Building
401 Dulany Street
Alexandria, VA 22314

Telephone inquiries concerning this matter should be directed to the undersigned at (571) 272-3232.

/Derek L. Woods/
Derek L. Woods
Attorney
Office of Petitions

UNITED STATES PATENT AND TRADEMARK OFFICE

Commissioner for Patents
United States Patent and Trademark Office
P.O. Box 1450
Alexandria, VA 22313-1450
www.uspto.gov

ORRICK, HERRINGTON & SUTCLIFFE, LLP
IP PROSECUTION DEPARTMENT
4 PARK PLAZA
SUITE 1600
IRVINE CA 92614-2558

MAILED

JUL 09 2009

OFFICE OF PETITIONS

In re Application of	:	
Charles W. Dickerson	:	
Application No.: 10/154590	:	DECISION ON
Filing or 371(c) Date: 05/22/2002	:	PETITION
Attorney Docket Number: 273/062	:	

This is a decision in response to the "Request for Reconsideration of Petition to Withdraw Holding of Abandonment 37 CFR 1.181(a))," filed June 16, 2009.

This Petition is hereby granted.

The above-identified application became abandoned for failure to timely and properly reply to the final Office action, mailed May 14, 2008. The Notice set a three (3) month period for reply. No reply having been received, the application became abandoned on August 15, 2008. A Notice of Abandonment was mailed January 6, 2009.

Applicant files the present request for reconsideration of petition and asserts that a timely reply to the Office action was filed using the certificate of facsimile procedures under 37 CFR 1.8. In support of this assertion, Applicant provides a copy of the reply; and a statement from Petitioner herein, attesting to the transmission of the reply on November 14, 2008. A review of the reply reveals that Applicant filed, *inter alia*, "Amendment and Response to Accompany RCE," that includes a Certificate of Mailing Under 37 CFR 1.8, dated November 14, 2008. The Certificate of Mailing is executed by Petitioner herein.

The file record does not include the originally submitted papers. Failure to receive correspondence which includes a certificate of mailing or certificate of facsimile transmission is addressed in 37 CFR 1.8(b), reproduced below:

In the event that correspondence is considered timely filed by being mailed or transmitted in accordance with paragraph (a) of this section, but not received in the U.S. Patent and Trademark Office after a reasonable amount of time has elapsed from the time of mailing or transmitting of the correspondence, or after the application is held to be abandoned, or after the proceeding is dismissed or decided with prejudice, or the prosecution of a reexamination proceeding is terminated pursuant to § 1.550(d) or § 1.957(b) or limited pursuant to § 1.957(c), or a requester

paper is refused consideration pursuant to §a), the correspondence will be considered timely if the party who forwarded such correspondence:

(1)Informs the Office of the previous mailing or transmission of the correspondence promptly after becoming aware that the Office has no evidence of receipt of the correspondence;

(2)Supplies an additional copy of the previously mailed or transmitted correspondence and certificate; and

(3)Includes a statement that attests on a personal knowledge basis or to the satisfaction of the Director to the previous timely mailing, transmission or submission. If the correspondence was sent by facsimile transmission, a copy of the sending unit's report confirming transmission may be used to support this statement. If the correspondence was transmitted via the Office electronic filing system, a copy of an acknowledgment receipt generated by the Office electronic filing system confirming submission may be used to support this statement.

(c) The Office may require additional evidence to determine if the correspondence was timely filed.

Applicant has complied with the requirements of 37 CFR 1.8(b).

In view of the foregoing, the petition is granted. The holding of abandonment is hereby withdrawn.

The application will be referred to Technology Center Art Unit for continued examination in the normal course of business.

Telephone inquiries concerning this matter should be directed to the undersigned at (571) 272-3232.

/Derek L. Woods/
Derek L. Woods
Attorney
Office of Petitions

UNITED STATES PATENT AND TRADEMARK OFFICE

COMMISSIONER FOR PATENTS
UNITED STATES PATENT AND TRADEMARK OFFICE
P.O. BOX 1450
ALEXANDRIA, VA 22313-1450
www.uspto.gov

UR
Paper NO. ~~6~~ 7

Mailed
AUG 15 2003

In re Application of
Gordon S. Hudson
Serial Number: 10/154,623
Filed: May 24, 2002
For: FLURESCENCE VALIDATION MICROPLATE AND METHOD OF USE

DECISION ON PETITION UNDER

M.P.E.P. 708.02, II

This is in response to the petition filed, June 30, 2003, requesting that the above-identified application be granted Special Status under Section 708.02, II of the M.P.E.P. and 37 CFR 1.102(d) (fee paid).

The petition has been considered and found to comply with the requirements set forth under the above-noted section. Accordingly, the petition is **GRANTED.**

JMStone

Jacqueline M. Stone, Director
Technology Center 1700
Chemical and Materials Engineering

G. S. Hudson
Innovative Instrument, Inc.
3200 Neuse Bank Court
Wake Forest, NC 27587

UNITED STATES PATENT AND TRADEMARK OFFICE

COMMISSIONER FOR PATENTS
UNITED STATES PATENT AND TRADEMARK OFFICE
P.O. BOX 1450
ALEXANDRIA, VA 22313-1450
www.uspto.gov

James G. Passé
1717 Brassfield Rd
Raleigh, NC 27624

COPY MAILED

AUG 18 2005

OFFICE OF PETITIONS

In re Application of	:
Hudson	: DECISION ON PETITION
Application No. 10/154,623	:
Filed: May 24, 2002	:
For: FLUORESCENCE VALIDATION	:
MICROPLATE AND METHOD OF USE	:

This decision is in response to the "Petition to correct Office Action filing date for application granted Expedited Status," filed June 22, 2005.

This matter is being treated as a petition under 37 CFR 1.181. No petition fee is required.

The petition under 37 CFR 1.181 is hereby **DISMISSED AS MOOT**.

A non-final Office action was mailed in the above-identified application on September 1, 2004. A response (consisting of a transmittal letter, amendment, and petition for extension of time) was received January 4, 2005. The transmittal form which accompanied the response bore a certificate of mailing date of December 31, 2004 in accordance with 37 CFR 1.8.

Petitioner argues that the response should be accorded a "filing date" as of the date of deposit (December 31, 2004) rather than the date of receipt (January 5, 2005).

Correspondence required to be filed in the Patent and Trademark Office within a set period of time will be considered as being timely filed if the procedure described 37 CFR 1.8 is adhered to. The actual date of receipt will be used for all other purposes.

The response filed January 5, 2005 was deemed timely as it bore a certificate of mailing date of December 31, 2004 in accordance with 37 CFR 1.8. The date of receipt, however, will be used for all other purposes. Thus, petitioner's request to have the response accorded a "filing date" of December 31, 2004 is without merit.

If petitioner desires to have correspondence accorded a specific date, i.e., date of deposit, petitioner should consider availing himself to the provisions set forth at 37 CFR 1.10.

This application is being forwarded to the Technology Center 1700 for further processing.
Telephone inquiries regarding this decision should be directed to the undersigned at (571) 272-3205.

Alesia M. Brown
Petitions Attorney
Office of Petitions

UNITED STATES PATENT AND TRADEMARK OFFICE

Commissioner for Patents
United States Patent and Trademark Office
P.O. Box 1450
Alexandria, VA 22313-1450
www.uspto.gov

JUL 22 2005

TIMOTHY N. THOMAS
WOODARD, EMHARDT, NAUGHTON, MORIARTY AND MCNETT
BANK ONE CENTER/TOWER
111 MONUMENT CIRCLE, SUITE 3700
INDIANAPOLIS IN 46204-5137

In re Application of	:
Gilbert Gonzales et al	:
Serial No.: 10/154,629	: PETITION DECISION
Filed: May 24, 2002	:
Attorney Docket No.: 5164.2TNT.346284	:

This is in response to the petition under 37 CFR 1.181, filed May 23, 2005, requesting withdrawal of abandonment based on failure to receive an Office action.

A review of the file history shows that the examiner mailed an Office action to applicants on December 23, 2003, setting a three month shortened statutory period for reply. Applicants replied on May 24, 2004, including a request and fee for a two month extension of time. The amendment was found to be non-compliant and a Notice of Non-Compliant Amendment was mailed to applicants on August 6, 2004, setting a one month time period for reply. Upon failure to receive a reply a Notice of Abandonment was mailed to applicants on April 21, 2005. Applicants state that they never received the Office action and provide statements and docket and mail logs substantiating the statements. In view of the evidence presented the Notice of Abandonment is withdrawn and the application restored to pending status with the mailing of this decision.

The petition is **GRANTED**.

The application will be forwarded to the examiner for mailing of a new Notice.

There is no fee for this petition and the petition fee paid of $130.00 will be credited to applicants' Deposit Account No. 23-3030, as directed.

Should there be any questions about this decision please contact William R. Dixon, Jr., by letter addressed to Director, TC 1600, at the address listed above, or by telephone at 571-272-0519 or by facsimile sent to the general Office facsimile number, 571-273-8300.

Bruce M. Kisliuk
Director, Technology Center 1600

UNITED STATES PATENT AND TRADEMARK OFFICE

MAR 22 2005

Commissioner for Patents
United States Patent and Trademark Office
P.O. Box 1450
Alexandria, VA 22313-1450
www.uspto.gov

In re Application of
Ted R. Massa *et al*
Application No. 10/154,654
Filed: May 24, 2002
Attorney Docket No. K-1481PD1

: DECISION ON PETITION

This is a decision on the petition filed on October 24, 2004 by which petitioners request that the finality of the rejection dated May 25, 2004 be held to have been premature. In view of the allegedly premature final rejection, petitioners request relief by invoking the Commissioner's supervisory authority to:

(1) declare that the examiner's rejection of all claims was prematurely made final;
(2) withdraw the finality of the May 25, 2004 Office action;
(3) reopen examination of the claims;
(4) require the examiner to read and thoroughly understand the specification;
(5) require the examiner to follow the Decision on Petition rendered on a similar petition in an application that is a divisional of the instant application; and
(6) require the examiner to permit petitioners to be their own lexicographers by recognizing the definition for the term "superhard material" that is set forth in the specification.

The petition is being considered under 37 CFR 1.181, and no fee is required for the petition. A refund of the $130.00 fee tendered with the petition will be credited to deposit Account No. 11-0508.

The petition is denied.

Timeliness of the Petition

37 CFR 1.181(f) states:

> The mere filing of a petition will not stay any period for reply that may be running against the application, nor act as a stay of other proceedings. Any petition under this part not filed within two months of the mailing date of the action or notice from which relief is requested may be dismissed as untimely, except as otherwise provided. This two-month period is not extendable.

As noted above, the final rejection in this application was dated May 25, 2004, more than two months prior to the filing of the petition. Therefore, the instant petition is technically untimely. However, inasmuch as it presents an issue that may have an impact on one or more copending applications, the petition will be addressed on the merits.

Facts in the Record and Facts Presented by Petitioners

A review of the record, and of the facts set forth in the petition, shows that the Summary of the Invention in petitioners' specification contains the following disclosure at page 5, lines 10-14:

The inventors of the present invention have developed a method of producing an AWJ mixing tube with a longitudinal bore lined with a superhard material which does not require the use of diamond deposited by CVD. The present invention comprises methods for making 15 an AWJ mixing tube using one or more pieces of a superhard material. The term "superhard material" as used herein refers to polycrystalline diamond (PCD) or polycrystalline cubic boron nitride (PCBN) which can be machined by electrical discharge machining (EDM). PCD is a particular species of synthetic diamond. PCD is produced by sintering together many individual diamond crystals in the presence of a catalyst at high temperatures and pressures into a coherent mass of interbonded diamond crystals. The catalyst may be provided in the form of a powder intermixed with the diamond crystals or it may be included in an adjacent element from which it infiltrates through the spaces between the diamond crystals during the sintering process. For example, one way the catalyst can be provided is by placing diamond grit on a substrate comprising a cemented tungsten carbide having 5-20 weight percent binder of cobalt or cobalt-nickel and then subjecting these components to high temperatures and pressures so that a portion of the binder of the cemented tungsten carbide infiltrates the diamond grit and catalyzes diamond to diamond bonding. Some of the binder (e.g. cobalt or cobalt-nickel) is left in the PCD.

The record also shows that:

(1) all of the claims contain the limitation "superhard material";
(2) in the Office action dated January 30, 2004, the examiner rejected claims 1-2 and 4-11 under 35 USC § 102(b) as being anticipated by Obata *et al*, a Japanese Patent Publication, and also applied Obata *et al* under 35 USC § 103 to reject claim 3;
(3) petitioners filed a reply on March 22, 2004 in which petitioners argued that these rejections were improper because Obata *et al* did not teach "superhard material" as defined in petitioners' specification but instead taught the use of CVD, which petitioners alleged to be expressly excluded from the definition of "superhard material.";
(4) the examiner then issued a final rejection on May 25, 2004 repeating the rejections previously made and citing US Patent No. 6,302,224 "to show that CVD diamond as well as polycrystalline diamond is a well-known superhard material in the tooling art ... .";
(5) petitioners had an interview with the examiner at which a Decision on Petition authored by Ms. Stone, a Director of Technology Center 3700 (a copy of which is attached to the instant petition) was brought to the examiner's attention;
(6) no record of the interview appears in the application file, but petitioners thought that the examiner had agreed to accept the definition of "superhard material";
(7) the examiner promulgated an Advisory Office action on August 10, 2004 refusing to withdraw the finality and holding that the definition of "superhard material" did not appear to limit "superhard material" to only the two materials specified by petitioners;
(8) petitioners' conducted a second interview with the examiner, emphasizing Director Stone's Decision on Petition, but the examiner did not find the claims to be allowable and promulgated a second advisory action.

Petitioners' Position

Petitioners take the position that the examiner has failed to follow proper examining procedure because the examiner has failed to attribute to the term "superhard material" the meaning that petitioners defined in their specification. Petitioners further argue that the examiner is denying their right to be their own lexicographers, and is ignoring an explicit finding by the Commissioner (per Technology Center Director Stone's Decision on Petition) that petitioners had defined "superhard material" in their specification and that the

definition does not include CVD diamond. Based upon these positions, petitioners conclude that the examiner's final rejection was premature.

Analysis

37 CFR 1.181(a)(1) states:

> Petition may be taken to the Director [f]rom any action or requirement of any examiner in the *ex parte* prosecution of an application, or in *ex parte* or *inter partes* prosecution of a reexamination proceeding which is not subject to appeal to the Board of Patent Appeals and Interferences or to the court.

37 CFR 41.31(a)(1) states:

> Every applicant, any of whose claims has been twice rejected, may appeal from the decision of the examiner to the Board by filing a notice of appeal accompanied by the fee set forth in § 41.20(b)(1) within the time period provided under § 1.134 of this title for reply.

Applying the plain language of 37 CFR 1.181(a)(1), it is clear that petitioners' arguments will not support the requested relief, because the relief requested is simply not the type of relief that can be obtained by petition. The issue presented by the record, and the arguments presented by petitioners, are clearly directed to the propriety of the examiner's interpretation of the language of the claims, and whether the examiner's final rejection of the claims is legally proper in view of the law governing claim interpretation. The question of whether the prior art defeats patentability of the claims, or fails to do so when the claim is properly interpreted, is clearly an appealable issue. Petitioners' attempt to characterize the examiner's legal position regarding the patentability of the claims into the procedural error of promulgating a premature final rejection because the examiner has refused to agree with petitioners' position regarding the proper interpretation of the claimed limitation "superhard material" in light of the definitional material in petitioners' specification, fails because the record shows that petitioners and the examiner have arrived at a clear issue. That issue is whether or not "superhard material" is inclusive or exclusive of CVD diamond in light of the definition of "superhard material" appearing in the specification. The question of whether the examiner is right (and if so, whether one or more claims are unpatentable), or wrong (and the claims are patentable), is a matter for appeal, not for petition.

With respect to the decision of Director Stone that is relied upon by petitioners, it is clear that Ms. Stone held "that the examiner did not interpret the claims in light of the specification until after the final rejection. Therefore, no clear issue has been established between the examiner and applicants as required by MPEP Section 706.07 … ." On the other hand, the record in this application indicates that the examiner has clearly interpreted the claims in light of the specification, taking the position in the final rejection that:

> " … that the CVD diamond meets the limitations of relative term (*sic*, the relative term) 'superhard material' as understood in plain meaning. … [a]pplicant's arguments filed March 24, 2004 have been fully considered but they are not persuasive. The examiner attached Sherwood 6,302,224 to show that CVD diamond as well as polycrystalline diamond is a well-known superhard material in the tooling art (col. 10, lines 30-35)."

The examiner further explained this position in the advisory action dated August 10, 2004 by stating that:

"The request for reconsideration has been considered but does NOT place the application in condition for allowance because: In accordance with MPEP 2111.01 , the specification must clearly set forth the definition explicitly and with reasonable clarity, deliberateness, and precision. In this instant application, applicant on page 5, lines 16-20, merely defines the term superhard material as 'refers to polycrystalline diamond (PCD) or polycrystalline cubic boron nitride (PCBN).' The alternative 'or' language exemplifies that superhard material could be either PCD or PCBN, or any material that could provide a strong abrasion resistance characteristic. Thus, exemplification is not an explicit definition ."

Conclusion

For the foregoing reasons, the relief requested by petitioners will not be granted. Specifically, the examiner's final rejection was not premature because a clear issue on the interpretation of claim language had been reached between petitioners and the examiner There is, therefore, no basis for withdrawing the finality of the May 25, 2004 Office action, or reopening the examination of the claims. There is no showing that the examiner did not read and thoroughly understand the specification, as opposed to simply disagreeing the meaning of the definition of "superhard material" given in the specification. Therefore, there is no basis for requiring the examiner to read and thoroughly understand the specification. The Decision on Petition relied upon by petitioners is distinguishable on the factual differences between the prosecution history described in the Decision, and the prosecution history in the present application. Therefore, there is no basis for requiring the examiner to "follow" that Decision. There is no evidence that the examiner has in any way prevented petitioners from being their own lexicographers; at best there is a disagreement on the record as to what petitioners' definition of "superhard material" means. There is, therefore, no basis upon which to require the examiner "to permit" petitioners to be their own lexicographers.

Petitioners may file a renewed petition, without fee, provided that the renewed petition is filed within two months from the date of this decision, and are reminded that the mere filing of the instant petition or the filing of a renewed petition will not stay any period for reply that may be running against the application, nor act as a stay of other proceedings. See 37 CFR 1.181(f).

PETITION DENIED.

E. R. Kazenske, Director
Technology Center 3700

Kennametal Inc.
1600 Technology Way
P.O. Box 231
Latrobe, PA 15650-0231

UNITED STATES PATENT AND TRADEMARK OFFICE

Commissioner for Patents
United States Patent and Trademark Office
P.O. Box 1450
Alexandria, VA 22313-1450
www.uspto.gov

COPY MAILED
NOV 06 2006
OFFICE OF PETITIONS

Kennametal Inc.
1600 Technology Way
P.O. Box 231
Latrobe PA 15650-0231

In re Application of:
Massa et al.
Application No. 10/154,654
Filed: May 24, 2002
Docket No.: K-1481PD1

: ON PETITION

This is a decision on the petition filed August 17, 2006, requesting under 37 CFR 1.182 "to declare that a decision rendered by the Director on a divisional application sibling of the instant application with regard to the meaning of a claim term is binding in the prosecution of the instant application..."

The petition is **dismissed**.

Petitioner points to the term "superhard material" present in the instant claims and also in the claims of several related applications, and contends that as Group Director Stone's decision on petition in one related application compelled another examiner to accept petitioner's definition of "superhard material" and the specific holdings of that Group Director, parity requires that the instant examiner be compelled in this application, on petition, to accept the same definition and follow the specific holdings of Group Director Stone.

Petitioner is reminded that 37 CFR 1.182 applies only when no other rule speaks to the question and is not a mechanism for avoiding the established rules and procedures. See Hicks v. Costello, 1903 Dec. Comm'r Pat. 123, 125 (1903). Petitioner appears to overlook that Group Director Kazenske (having jurisdiction of the examiner in charge of the instant application) has already considered the same issues, on petition under 37 CFR 1.181, in the decision mailed March 22, 2005. That decision specifically denied, *inter alia*, the requests that (1) the examiner be required to follow Group Director's Stone's decision, and (2) the examiner be required to permit petitioners to be their own lexicographers by recognizing the definition for the term "superhard material" set forth in the instant specification. Accordingly, it would be inappropriate to permit 37 CFR 1.182 to become a means for circumventing Group Director Kazenske's decision in this application. This is particularly so since, contrary to petitioner's contention, Group Director Stone only decided in her application whether the Office action in question had been properly been made final, and Group Director Kazenske properly found no compelling reason to adhere to that decision of Group Director Stone in this application. The relief requested herein has no relationship to the issue of finality in this application.

Petitioners are reminded that examiners do not construe claims, including the meaning of terms within claims, as a mere exercise in a vacuum; rather that construction is part and parcel of the examination of the claims on the merits for compliance *vel non* with the statutory requirements of novelty, utility enablement, description, definiteness, anticipation, and obviousness (including

double patenting). As Group Director Kazenske correctly opined (at 3):

> Applying the plain language of 37 CFR 1.181(a)(1) it is clear that petitioners' arguments will not support the requested relief, because the relief requested is not the type of relief that can be obtained on petition. The issues presented by the record, and the arguments presented by petitioners, are clearly directed to the propriety of the examiner's interpretation of the language of the claims, and whether the examiner's final rejection of the claims is legally proper in view of the law governing claim interpretation. The question of whether the prior art defeats patentability of the claims, or fails to do so when the claim is properly interpreted, is clearly an appealable issue.

While petitioners profess that they are aware and respectful of the distinction between petitionable and appealable subject matter, and contend that the subject matter of the instant petition is properly reviewable on petition, this contention is simply not persuasive. It is the policy of the United States Patent and Trademark Office in appropriate circumstances to decline to rule on a petitionable issue, when, as here, that issue is also determinative of a rejection, and as such, is appropriate for consideration on appeal to the BPAI. See In re Searles, 422 F.2d 431, 433-34, 164 USPQ 623, 625-26(CCPA 1970). In Searles, the court noted, where the issue, as here, additionally and necessarily requires the exercise of technical skill and legal judgment in order to evaluate the facts presented, the issue is properly decided on the merits, and is properly reviewed on appeal, not petition. Id. at 435, 164 USPQ at 626.

Whether the examiner's exercise of technical skill and legal judgment in this case properly evaluated the facts will simply not be determined on petition. As the arguments presented in the guise of a petition go more to the merits of the rejections of record, as opposed to any procedural question, they will not be further addressed on petition. See Boundy v. U.S. Patent & Trademark Office, 73 USPQ2d 1468 (DC EVa 2004), *appeal dismissed*, 2004 U.S. App. LEXIS 26384 (Fed. Cir. 2004). Any review of the rejection(s) of which petitioners complain (and its underlying reasoning) is limited to a merits appeal as provided by 35 U.S.C. § 134, and not by way of petition. Id. It is well settled that the Director will not, on petition, usurp the functions or impinge upon the jurisdiction of the BPAI. See In re Dickerson, 299 F.2d 954, 958, 133 USPQ 39, 43 (CCPA 1962); Bayley's Restaurant v. Bailev's of Boston. Inc., 170 USPQ 43, 44 (Comm'r Pat. 1971). As to any force and effect of Group Director Stone's decision in her case on the matters in this case, suffice to say that in addition to Group Director Kazenske's opinion, the decisions of any Group Director are subordinate to the Director, and this office reviews decisions of Group Directors as the Director's delegate under 37 CFR 1.181(g), and also decides matters under 37 CFR 1.182. See MPEP 1002.02(b) §§ 15, 11, respectively.

This application is being referenced to the Technology Center.

Telephone inquiries related to this communication should be directed to the undersigned at (571) 272-3217.

Brian Hearn
Petitions Examiner
Office of Petitions

UNITED STATES PATENT AND TRADEMARK OFFICE

Commissioner for Patents
United States Patent and Trademark Office
P.O. Box 1450
Alexandria, VA 22313-1450
www.uspto.gov

IMMUNEX CORPORATION
LAW DEPARTMENT
1201 AMGEN COURT WEST
SEATTLE WA 98119

COPY MAILED
JUL 06 2009
OFFICE OF PETITIONS

In re Patent No. 7,411,055	:	
Anderson	:	LETTER REGARDING PATENT
Issue Date: August 12, 2008	:	TERM ADJUSTMENT AND NOTICE
Application No. 10/154,670	:	OF INTENT TO ISSUE
Filed: May 23, 2002	:	CERTIFICATE OF CORRECTION
Atty Docket No. 3224-US-NP	:	

This is in response to the "REQUEST FOR RECONSIDERATION OF PATENT TERM ADJUSTEMENT UNDER 37 CFR 1.705(d)," filed October 10, 2008. This petition will be treated under 37 CFR 1.705(d).

The request for reconsideration of patent term adjustment is **GRANTED TO THE EXTENT INDICATED HEREIN**.

The patent term adjustment indicated in the patent is to be corrected by issuance of a certificate of correction showing a revised Patent Term Adjustment of **three hundred fifty-six (356)** days.

Patentees are given THIRTY (30) DAYS or ONE (1) MONTH, whichever is longer, from the mail date of this decision to respond to this decision. No extensions of time will be granted under § 1.136.

On August 12, 2008, the above-identified application matured into U.S. Patent No. 7,411,055 with a patent term adjustment of 415 days. This request for reconsideration of patent term adjustment (including the required fee) was timely filed within two months of the issue date of the patent. See 1.705(d).

Patentee requests recalculation of the patent term adjustment based on the decision in Wyeth v. Dudas, 580 F. Supp. 2d 138, 88 U.S.P.Q. 2d 1538 (D.D.C. 2008). Patentee asserts that per Wyeth, the period of any adjustment granted under subsection 154(b)(1) shall not exceed the actual number of days the

issuance of the patent was delayed. Patentee asserts that "…the PAIR calculations has [sic] penalized Applicant twice by improperly adding in the delays under 154(b)(2)(C)(i) due to Applicant delays, that is, an extra 117 days, at the same time the guarantee of a 3 year application pendency was suspended after the filing of the RCE." (petition, p.2) Patentee believes that patentee is entitled to an additional portion of patent term which amounts to a total of 117 days, thus bringing the total amount of patent term adjustment to **532** days.

The 739 day Three Year Delay period is calculated based on the application having been filed under 35 U.S.C. §111(a) on May 23, 2002, and a request for continued examination (RCE) having being filed on June 1, 2007. **The filing of a RCE cuts-off the applicant's ability to accumulate any additional patent term adjustment against the three-year pendency provision, but does not otherwise affect patent term adjustment.** 37 CFR § 1.703(b)(1)(emphasis added)

Accordingly, the period of adjustment under § 1.702(b) is 739 days, counting the number of days beginning on May 24, 2005 and ending on June 1, 2007.

The 708 day period is for failure by the Office to mail at least one of a notification under 35 U.S.C. 132 not later than fourteen months after the date on which the application was filed under 35 U.S.C. 111(a), pursuant to § 1.702(a)(1). A restriction requirement was mailed on June 30, 2005, which is 14 months and 708 days after the application was filed on May 23, 2002.

The total period of Office delay is the sum of the period of Three Years Delay terminated by the filing of a RCE (739 days) and the period of Examination Delay (708 days) to the extent that these periods of delay are not overlapping. Considering overlap, the Office has determined that the total period of Office delay is 739 days.

Under 37 CFR § 1.703(f), patentee is entitled to a period of patent term adjustment equal to the period of delays based on the grounds set forth in 37 CFR §1.702 reduced by the period of time equal to the period of time during which applicant failed to engage in reasonable efforts to conclude prosecution pursuant to 37 CFR §1.704. In other words, the period of Office delay reduced by the period of applicant delay. Patentee states the

period of reduction for applicant delay is 207 days. Patentee states the periods of reduction include pursuant to 37 CFR 1.704(c)(7), 113 days for a response to a restriction requirement filed on December 21, 2005 and pursuant to 37 CFR 1.704(b), 94 days for a amendment filed on October 2, 2006.

Patentee asserts that the periods of reduction that occurred after the June 1, 2007 RCE was filed should not be counted as Applicant delay periods. The filing of an RCE cuts off the applicant's ability to accumulate any additional patent term adjustment against the three year pendency provision, but does not otherwise affect patent term adjustment. 37 CFR § 1.703(b)(1). Periods of Office delay and applicant delay that occur after the filing of the RCE are considered in the patent term adjustment. The correct rUle is that any Office delay subsequent to the filing of the RCE is not included in the three-year time frame specified in 35 U.S.C. 154(b)(1)(B) and as such, Office delay after the filing of the RCE does not overlap with any period of Office delay in taking in excess of three years to issue the patent. See *Explanation of 37 CFR 1.703(f) and of the United States Patent and Trademark Office Interpretation of 35 U.S.C. 154(b)(2)(A)*. Therefore, the period of reduction pursuant to 37 CFR 1.704(b) of 31 days for the amendment filed October 29, 2007 and the period of reduction pursuant to 37 CFR 1.704(c)(10) of 86 days for the 312 amendment filed on April 22, 2008 were properly entered.

In addition, a review of the record has uncovered another previously overlooked period of applicant delay. Pursuant to 37 CFR 1.704(b), a period of 59 days of applicant delay is warranted for the RCE filed on June 1, 2007. A final Office action was mailed on January 3, 2007. On June 1, 2007, three months and 59 days after the January 3, 2007 final Office action was mailed, applicant filed a RCE.

The Office has calculated the period of applicant delay as 383 days. (113 days pursuant to 37 CFR 1.704(c)(7), 94 days, 59 days and 31 days, respectively, pursuant to 37 CFR 1.704(b), and 86 days pursuant to 37 CFR 1.704(c)(10).

The period of reduction for applicant delay is 383 days, not 207, as patentee contends.

As such, applicant is entitled to a patent term adjustment of 356 days (708 days examination delay +739 days Three Year delay reduced by 708 overlap - 383 days for applicant delay).

Accordingly, the patent term adjustment indicated in the patent is to be corrected by issuance of a certificate of correction showing a revised Patent Term Adjustment of three hundred fifty-six (356) days.

The Office acknowledges submission of the $200.00 fee set forth in 37 CFR 1.18(e) on October 10, 2008. No additional fees are required.

The application file is being forwarded to the Certificates of Correction Branch for issuance of a certificate of correction in order to rectify this error. The Office will issue a certificate of correction indicating that the term of the above-identified patent is adjusted by three hundred fifty-six (356) days.

Telephone inquiries specific to this matter should be directed to Shirene Willis Brantley, Senior Petitions Attorney, at (571) 272-3230.

Nancy Johnson
Senior Petitions Attorney
Office of the Deputy Commissioner
for Patent Examination Policy

UNITED STATES PATENT AND TRADEMARK OFFICE

CERTIFICATE OF CORRECTION

PATENT : 7,411,055 B2

DATED : **August 12, 2008** **DRAFT**

INVENTOR(S) : Dirk M. Anderson

It is certified that error appears in the above-identified patent and that said Letters Patent is hereby corrected as shown below:

On the cover page,

[*] Notice: Subject to any disclaimer, the term of this patent is extended or adjusted under 35 USC 154(b) by 415 days

Delete the phrase "by 415 days" and insert – by 356 days--

UNITED STATES PATENT AND TRADEMARK OFFICE

Commissioner for Patents
United States Patent and Trademark Office
P.O. Box 1450
Alexandria, VA 22313-1450
www.uspto.gov

SALIWANCHIK LLOYD & SALIWANCHIK
A PROFESSIONAL ASSOCIATION
PO BOX 142950
GAINESVILLE, FL 32614-2950

COPY MAILED
OCT 1 0 2006
OFFICE OF PETITIONS

In re Application of Bejanin	:	
Application No. 10/154,678	:	DECISION ON PETITION
Filing Date: May 22, 2002	:	UNDER 37 CFR 1.78(a)(3)
Attorney Docket No. G-182US0REG	:	

This is a decision on the petition under 37 CFR 1.78(a)(3), filed April 7, 2006, to accept an unintentionally delayed claim under 35 U.S.C. § 120 for the benefit of priority to the prior-filed nonprovisional applications set forth in the amendment filed with the petition.

The petition is **GRANTED**.

A petition for acceptance of a claim for late priority under 37 CFR 1.78(a)(3) is only applicable to those applications filed on or after November 29, 2000. Further, the petition is appropriate only after the expiration of the period specified in 37 CFR 1.78(a)(2)(ii). In addition, the petition under 37 CFR 1.78(a)(3) must be accompanied by:

(1) the reference required by 35 U.S.C. § 120 and 37 CFR 1.78(a)(2)(i) of the prior-filed application, unless previously submitted;
(2) the surcharge set forth in § 1.17(t); and
(3) a statement that the entire delay between the date the claim was due under 37 CFR 1.78(a)(2)(ii) and the date the claim was filed was unintentional. The Director may require additional information where there is a question whether the delay was unintentional.

All of the above requirements having been satisfied, the late claim for priority under 35 U.S.C. § 120 is accepted as being unintentionally delayed.

The granting of the petition to accept the delayed benefit claim to the prior-filed applications under 37 CFR 1.78(a)(3) should not be construed as meaning that this application is entitled to the benefit of the prior-filed applications. In order for this application to be entitled to the benefit of the prior-filed applications, all other requirements under 35 U.S.C. § 120 and 37 CFR 1.78(a)(1) and (a)(2) must be met. Similarly, the fact that the corrected Filing Receipt accompanying this decision on petition includes the prior-filed applications should not be construed as meaning that applicant is entitled to the claim for benefit of priority to the prior-filed applications noted thereon.

Accordingly, the examiner will, in due course, consider this benefit claim and determine whether the application is entitled to the benefit of the earlier filing date.

A corrected Filing Receipt, which includes the priority claim to the prior-filed nonprovisional applications, accompanies this decision on petition.

This application is being forwarded to Technology Center Art Unit 1631 for consideration by the examiner of applicant's entitlement to claim benefit of priority under 35 U.S.C. § 120 to the prior-filed applications.

Any inquiries concerning this decision may be directed to Senior Petitions Attorney Steven Brantley at (571) 272-3203. All other inquiries concerning either the examination procedures or status of the application should be directed to the Technology Center.

Charles Steven Brantley
Senior Petitions Attorney
Office of Petitions

ATTACHMENT: Corrected Filing Receipt

UNITED STATES PATENT AND TRADEMARK OFFICE

UNITED STATES DEPARTMENT OF COMMERCE
United States Patent and Trademark Office
Address: COMMISSIONER FOR PATENTS
P.O. Box 1450
Alexandria, Virginia 22313-1450
www.uspto.gov

APPL NO.	FILING OR 371 (c) DATE	ART UNIT	FIL FEE REC'D	ATTY.DOCKET NO	DRAWINGS	TOT CLMS	IND CLMS
10/154,678	05/22/2002	1631	575	G-182US01REG	4	13	2

CONFIRMATION NO. 5120
CORRECTED FILING RECEIPT
OC000000020707554
OC000000020707554

23557
SALIWANCHIK LLOYD & SALIWANCHIK
A PROFESSIONAL ASSOCIATION
PO BOX 142950
GAINESVILLE, FL 32614-2950

Date Mailed: 10/04/2006

Receipt is acknowledged of this regular Patent Application. It will be considered in its order and you will be notified as to the results of the examination. Be sure to provide the U.S. APPLICATION NUMBER, FILING DATE, NAME OF APPLICANT, and TITLE OF INVENTION when inquiring about this application. Fees transmitted by check or draft are subject to collection. Please verify the accuracy of the data presented on this receipt. **If an error is noted on this Filing Receipt, please mail to the Commissioner for Patents P.O. Box 1450 Alexandria Va 22313-1450. Please provide a copy of this Filing Receipt with the changes noted thereon. If you received a "Notice to File Missing Parts" for this application, please submit any corrections to this Filing Receipt with your reply to the Notice. When the USPTO processes the reply to the Notice, the USPTO will generate another Filing Receipt incorporating the requested corrections (if appropriate).**

Applicant(s)

Stephane Bejanin, Paris, FRANCE;
Hiroaki Tanaka, Antony, FRANCE;

Assignment For Published Patent Application

GENSET, S.A., Paris, FRANCE

Power of Attorney: The patent practitioners associated with Customer Number **23557**.

Domestic Priority data as claimed by applicant

This appln claims benefit of 60/293,574 05/25/2001
and claims benefit of 60/298,698 06/15/2001
and claims benefit of 60/302,277 06/29/2001
and claims benefit of 60/305,456 07/13/2001
and is a CIP of 09/924,340 08/06/2001 PAT 7,074,901
which claims benefit of 60/305,456 07/13/2001
and claims benefit of 60/302,277 06/29/2001
and claims benefit of 60/298,698 06/15/2001
and claims benefit of 60/293,574 05/25/2001

Foreign Applications

If Required, Foreign Filing License Granted: 07/29/2002

The country code and number of your priority application, to be used for filing abroad under the Paris Convention, is
US10/154,678

Projected Publication Date: Not Applicable

Non-Publication Request: No

Early Publication Request: No

** SMALL ENTITY **

Title

Human cDNAs and proteins and uses thereof

Preliminary Class

435

PROTECTING YOUR INVENTION OUTSIDE THE UNITED STATES

Since the rights granted by a U.S. patent extend only throughout the territory of the United States and have no effect in a foreign country, an inventor who wishes patent protection in another country must apply for a patent in a specific country or in regional patent offices. Applicants may wish to consider the filing of an international application under the Patent Cooperation Treaty (PCT). An international (PCT) application generally has the same effect as a regular national patent application in each PCT-member country. The PCT process **simplifies** the filing of patent applications on the same invention in member countries, but **does not result** in a grant of "an international patent" and does not eliminate the need of applicants to file additional documents and fees in countries where patent protection is desired.

Almost every country has its own patent law, and a person desiring a patent in a particular country must make an application for patent in that country in accordance with its particular laws. Since the laws of many countries differ in various respects from the patent law of the United States, applicants are advised to seek guidance from specific foreign countries to ensure that patent rights are not lost prematurely.

Applicants also are advised that in the case of inventions made in the United States, the Director of the USPTO must issue a license before applicants can apply for a patent in a foreign country. The filing of a U.S. patent application serves as a request for a foreign filing license. The application's filing receipt contains further information and guidance as to the status of applicant's license for foreign filing.

Applicants may wish to consult the USPTO booklet, "General Information Concerning Patents" (specifically, the section entitled "Treaties and Foreign Patents") for more information on timeframes and deadlines for filing foreign patent applications. The guide is available either by contacting the USPTO Contact Center at 800-786-9199, or it can be viewed on the USPTO website at http://www.uspto.gov/web/offices/pac/doc/general/index.html.

For information on preventing theft of your intellectual property (patents, trademarks and copyrights), you may wish to consult the U.S. Government website, http://www.stopfakes.gov. Part of a Department of Commerce initiative, this website includes self-help "toolkits" giving innovators guidance on how to protect intellectual property in specific countries such as China, Korea and Mexico. For questions regarding patent enforcement issues, applicants may call the U.S. Government hotline at 1-866-999-HALT (1-866-999-4158).

LICENSE FOR FOREIGN FILING UNDER
Title 35, United States Code, Section 184
Title 37, Code of Federal Regulations, 5.11 & 5.15

GRANTED

The applicant has been granted a license under 35 U.S.C. 184, if the phrase "IF REQUIRED, FOREIGN FILING LICENSE GRANTED" followed by a date appears on this form. Such licenses are issued in all applications where the conditions for issuance of a license have been met, regardless of whether or not a license may be required as set forth in 37 CFR 5.15. The scope and limitations of this license are set forth in 37 CFR 5.15(a) unless an earlier license has been issued under 37 CFR 5.15 (b). The license is subject to revocation upon written notification. The date indicated is the effective date of the license, unless an earlier license of similar scope has been granted under 37 CFR 5.13 or 5.14.

This license is to be retained by the licensee and may be used at any time on or after the effective date thereof unless it is revoked. This license is automatically transferred to any related applications(s) filed under 37 CFR 1.53(d). This license is not retroactive.

The grant of a license does not in any way lessen the responsibility of a licensee for the security of the subject matter as imposed by any Government contract or the provisions of existing laws relating to espionage and the national security or the export of technical data. Licensees should apprise themselves of current regulations especially with respect to certain countries, of other

agencies, particularly the Office of Defense Trade Controls, Department of State (with respect to Arms, Munitions and Implements of War (22 CFR 121-128)); the Bureau of Industry and Security, Department of Commerce (15 CFR parts 730-774); the Office of Foreign Assets Control, Department of Treasury (31 CFR Parts 500+) and the Department of Energy.

NOT GRANTED

No license under 35 U.S.C. 184 has been granted at this time, if the phrase "IF REQUIRED, FOREIGN FILING LICENSE GRANTED" DOES NOT appear on this form. Applicant may still petition for a license under 37 CFR 5.12, if a license is desired before the expiration of 6 months from the filing date of the application. If 6 months has lapsed from the filing date of this application and the licensee has not received any indication of a secrecy order under 35 U.S.C. 181, the licensee may foreign file the application pursuant to 37 CFR 5.15(b).

UNITED STATES PATENT AND TRADEMARK OFFICE

COMMISSIONER FOR PATENTS
UNITED STATES PATENT AND TRADEMARK OFFICE
WASHINGTON, D.C. 20231
www.uspto.gov

Paper No. 4

Lerner, David, Littenberg,
Krumholz & Mentlik, LLP
600 South Avenue West
Westfield NJ 07090

COPY MAILED

AUG 0 2 2002

OFFICE OF PETITIONS

In re Application of DERK PIETER BROUWER Application No. 10/154,689 Filed: May 24, 2002 Attorney Docket No. DAVIDK 3.9-005 CIP	DECISION GRANTING PETITION

This is a decision on the petition under 37 CFR 1.10, filed June 6, 2002, requesting that the above-identified application be accorded a filing date of May 24, 2002, rather than the presently accorded filing date of May 25, 2002.

Petitioner alleges that the application was deposited in Express Mail service on May 24, 2002. In support of the allegation, the petition is accompanied by a copy of Express Mail label No. EV064375275US. Although the "date-in" indicated on the Express Mail label is May 25, 2002, the label also contains a United States Postal Service (USPS) stamp of May 24, 2002, which corroborates petitioner's allegation. The same Express Mail label number was placed on the original application papers located in the official file.

In view of the above, the petition is **granted**. No petition fee is necessary.

This application file will be forwarded to the Office of Initial Patent Examination for correction of the filing date to May 24, 2002, and the mailing of a corrected filing receipt.

Telephone inquiries should be directed to the undersigned at (703) 306-5589.

Christina Tartera Donnell

Christina Tartera Donnell
Senior Petitions Attorney
Office of Petitions
Office of the Deputy Commissioner
for Patent Examination Policy

UNITED STATES PATENT AND TRADEMARK OFFICE

UNITED STATES DEPARTMENT OF COMMERCE
United States Patent and Trademark Office
Address: COMMISSIONER FOR PATENTS
P.O. Box 1450
Alexandria, Virginia 22313-1450
www.uspto.gov

Lerner, David, Littenberg,
Krumholz & Mentlik, LLP
600 South Avenue West
Westfield, NJ 07090

Mail Date: 05/04/2010

Applicant	: Derk Pieter Brouwer	: DECISION ON REQUEST FOR
Patent Number	: 7613649	: RECALCULATION of PATENT
Issue Date	: 11/03/2009	: TERM ADJUSTMENT IN VIEW
Application No	: 10/154,689	: OF WYETH AND NOTICE OF INTENT TO
Filed	: 05/24/2002	: ISSUE CERTIFICATE OF CORRECTION
		:

The Request for Recalculation is **GRANTED** to the extent indicated.

The patent term adjustment has been determined to be **2103** days. The USPTO will *sua sponte* issue a certificate of correction reflecting the amount of PTA days determined by the recalculation.

Prior to the issuance of the certificate of correction, the USPTO will afford patentee an opportunity to be heard and request reconsideration. Accordingly, patentee has **one month or thirty (30) days**, whichever is longer, to file a request for reconsideration of this patent term adjustment calculation. See 35 U.S.C. 154(b)(3)(B)(ii) and 37 CFR 1.322(a)(4). No extensions of time will be granted under 37 CFR 1.136.

Patentee should use document code PET.OP if electronically filing a request for reconsideration of this patent term adjustment calculation. The patentee must also include the information required by 37 CFR 1.705(b)(2) and the fee required by 37 CFR 1.18(e). If patentee does not file a timely request for reconsideration of this patent term adjustment calculation including the information required by 37 CFR 1.705(b)(2) and the fee required by 37 CFR 1.18(e), the USPTO will issue a certificate of correction reflecting the PTA determination noted above.

Patentee should be aware that in order to preserve the right to review in the United States District Court for the District of Columbia of the USPTO patent term adjustment determination, patentee must ensure that he or she also take the steps required under 35 U.S.C. 154(b)(4)(A) in a timely manner. Nothing in the request for recalculation should be construed as providing an alternative time frame for commencing a civil action under 35 U.S.C. 154(b)(4)(A).

Any questions concerning this decision should be directed to the Office of Patent Legal Administration at 571-272-7702.

UNITED STATES PATENT AND TRADEMARK OFFICE

COMMISSIONER FOR PATENTS
UNITED STATES PATENT AND TRADEMARK OFFICE
P.O. BOX 1450
ALEXANDRIA, VA 22313-1450
www.uspto.gov

PFIZER INC.
PATENT DEPARTMENT, MS8260-1611
EASTERN POINT ROAD
GROTON, CT 06340

COPY MAILED

SEP 09 2005

OFFICE OF PETITIONS

In re Application of	:	
Glen E. Wilcox, et al.	:	
Application No. 10/154,699	:	ON PETITION
Filed: May 23, 2002	:	
Attorney Docket No.: PC23066A	:	
	:	

This is a decision on the petition, filed July 5, 2005, under 37 CFR 1.313(c)(2) to withdraw the above-identified application from issue after payment of the issue fee. A copy of the petition was provided by facsimile transmission on September 7, 2005, since the original papers cannot be located.

The petition is **GRANTED**.

The above-identified application is withdrawn from issue for consideration of a submission under 37 CFR 1.114 (request for continued examination). See 37 CFR 1.313(c)(2).

Petitioner is advised that the issue fee paid on June 29, 2005, in the above-identified application, cannot be refunded. If, however, the above-identified application is again allowed, petitioner may request that it be applied towards the issue fee required by the new Notice of Allowance. [1]

Telephone inquiries relating to this decision should be directed to the undersigned at (571) 272-3204.

The application is being referred to Technology Center AU 1624 for further processing of the request for continued examination under 37 CFR 1.114.

Sherry D. Brinkley
Petitions Examiner
Office of Petitions

[1]The request to apply the issue fee to the new Notice may be satisfied by completing and returning the new Issue Fee Transmittal Form PTOL-85(b), which includes the following language thereon: "Commissioner for Patents is requested to apply the Issue Fee and Publication Fee (if any) or re-apply any previously paid issue fee to the application identified above." Petitioner is advised that, whether a fee is indicated as being due or not, the Issue Fee Transmittal Form **must** be completed and timely submitted to avoid abandonment. Note the language in bold text on the first page of the Notice of Allowance and Fee(s) Due (PTOL-85).

UNITED STATES PATENT AND TRADEMARK OFFICE

Commissioner for Patents
United States Patent and Trademark Office
P.O. Box 1450
Alexandria, VA 22313-1450
www.uspto.gov

MATTHEW R. JENKINS, ESQ.
2310 FAR HILLS BUILDING
DAYTON OH 45419

COPY MAILED

OCT 2 6 2004

OFFICE OF PETITIONS

In re Application of
John P. Barber et al.
Application No. 10/154,700
Filed: May 22, 2002
Attorney Docket No. IAP044P2

ON PETITION

This is a decision on the petition filed August 3, 2004 under 37 CFR 1.137(b),[1] to revive the above-identified application.

The petition under 37 CFR 1.137 (b) is **GRANTED**.

This application became abandoned July 1, 2004 for failure to timely pay the issue fee on or before June 30, 2004. Accordingly, a Notice of Abandonment was mailed August 2, 2004.

The issue fee, petition fee, publication fee and request for 10 advance copies of the patent, in accordance with 37 CFR 1.18, has been charged to deposit account no. 50-1287. All other requirements of 37 CFR 1.137(b) having now been met, this application file is being forwarded to the Publishing Division to be processed into a patent.

Telephone inquiries concerning this matter may be directed to the undersigned Petitions Attorney at (571) 272-3212.

Patricia Faison-Ball

Patricia Faison-Ball
Senior Petitions Attorney
Office of Petitions

---

[1]Effective December 1, 1997, the provisions of 37 CFR 1.137(b) now provide that where the delay in reply was unintentional, a petition may be filed to revive an abandoned application or a lapsed patent pursuant to 37 CFR 1.137(b). A grantable petition filed under the provisions of 37 CFR 1.137(b) must be accompanied by:

(1) the required reply, unless previously filed. In a nonprovisional application abandoned for failure to prosecute, the required reply may be met by the filing of a continuing application. In a nonprovisional application filed on or after June 8, 1995, and abandoned for failure to prosecute, the required reply may also be met by the filing of a request for continued examination in compliance with § 1.114. In an application or patent, abandoned or lapsed for failure to pay the issue fee or any portion thereof, the required reply must be the payment of the issue fee or any outstanding balance thereof.

(2) the petition fee as set forth in 37 CFR 1.17(m);

(3) a statement that the entire delay in filing the required reply from the due date for the reply until the filing of a grantable petition pursuant to 37 CFR 1.137(b) was unintentional. The Commissioner may required additional information where there is a question whether the delay was unintentional; and

(4) any terminal disclaimer (and fee as set forth in 37 CFR 1.20(d)) required pursuant to 37 CFR 1.137(c)).

UNITED STATES PATENT AND TRADEMARK OFFICE

COMMISSIONER FOR PATENTS
UNITED STATES PATENT AND TRADEMARK OFFICE
P.O. BOX 1450
ALEXANDRIA, VA 22313-1450
www.uspto.gov

Paper No. 7

Lord Corporation
111 Lord Drive
P.O. Box 8012
Cary, NC 27512-8012

COPY MAILED

JAN 1 6 2004

OFFICE OF PETITIONS

In re Application of
Andrew K. Kintz, et. al.
Application No. 10/154,706
Filed: May 23, 2002
Attorney Docket No. IR-2652(ET)CIP1

ON PETITION

This is a decision on the petition under 37 CFR 1.137(b), filed January 13, 2004, to revive the above-identified application, which is being treated as a petition under 37 CFR 1.181 to withdraw the holding of abandonment.

The petition under 37 CFR 1.181 is **GRANTED**.

In the instant petition, petitioner states that a timely response to the Notice to File Missing Parts mailed June 27, 2002, was filed. As evidence, petitioner submitted a copy of the postcard receipt, which shows that on July 8, 2002, the Office timely received an executed oath/declaration, power of attorney and property rights statement, $130 surcharge for the late filing of the oath/declaration, a copy of the Notice to File Missing Parts, Recordation form Coversheet, $40 assignment fee, a postcard receipt, an executed assignment to Lord Corporation, and an authorization to charge the above fees.

Since the evidence is clear that the above-identified application was held erroneously abandoned, the $1,330 petition to revive fee is unnecessary and will be credited to petitioner's deposit account. However, finance records reveal that the $130 surcharge required by the Notice to File Missing Parts was never charged, as requested, on June 27, 2002. Therefore, the $130 surcharge has been charged to petitioner's deposit account.

The application file is being forwarded to the Office of Initial Patent Examination for further processing.

Telephone inquiries concerning this decision should be directed to Andrea Smith at (703) 308-6711.

Andrea Smith
Petitions Examiner
Office of Petitions
Office of the Deputy Commissioner
for Patent Examination Policy

UNITED STATES PATENT AND TRADEMARK OFFICE

Commissioner for Patents
United States Patent and Trademark Office
P.O. Box 1450
Alexandria, VA 22313-1450
www.uspto.gov

VOLPE AND KOENIG, P.C.
UNITED PLAZA, SUITE 1600
30 SOUTH 17TH STREET
PHILADELPHIA, PA 19103

COPY MAILED
MAY 17 2004
OFFICE OF PETITIONS

In re Application of	:	
Lee, et al.	:	
Application No. 10/154,716	:	ON PETITION
Filed: May 24, 2002	:	
Attorney Docket No. DEE-PT068	:	

This is a decision on the petition under 37 CFR 1.137(b), filed April 2, 2004, to revive the above-identified application.

The petition is **GRANTED**.

This application became abandoned for failure to timely pay the issue fee on or before March 18, 2004. Accordingly, this application became abandoned on March 19, 2004.

This application is being forwarded to Publishing Division for processing into a patent.

Telephone inquiries concerning this matter may be directed to the undersigned at (703) 306-9200.

Edward J. Tannouse
Petitions Attorney
Office of Petitions
United States Patent and Trademark Office

UNITED STATES PATENT AND TRADEMARK OFFICE

Commissioner for Patents
United States Patent and Trademark Office
P.O. Box 1450
Alexandria, VA 22313-1450
www.uspto.gov

FULBRIGHT & JAWORSKI, LLP
666 FIFTH AVE
NEW YORK NY 10103-3198

COPY MAILED

MAY 3 1 2007

OFFICE OF PETITIONS

In re Application of	:	
Peter A. Broms et al.	:	
Application No. 10/154,742	:	DECISION ON PETITION
Filed: May 24, 2002	:	TO MAKE SPECIAL UNDER
Attorney Docket No. NY-ACUS 204-US	:	37 CFR 1.102(c)(1)
	:	

This is a decision on the petition under 37 CFR 1.102(c)(1), filed January 23, 2007, to make the above-identified application special based on applicant's age as set forth in M.P.E.P. § 708.02, Section IV.

The petition is **GRANTED**.

A grantable petition to make an application special under 37 CFR 1.102(c)(1) and MPEP § 708.02, Section IV: Applicant's Age must be accompanied by evidence showing that at least one of the applicants is 65 years of age, or more, such as a birth certificate or a statement by applicant. No fee is required

The instant petition includes a copy of the applicant, Peter A. Broms, passport proving that he is 65 years of age or older. Accordingly, the above-identified application has been accorded "special" status.

Telephone inquiries concerning this decision should be directed to Terri Williams at 571-272-2991.

All other inquiries concerning either the examination or status of the application should be directed to the Technology Center.

The application is being forwarded to the Technology Center Art Unit 3609 for action on the merits commensurate with this decision.

Terri Williams

Terri Williams
Petitions Examiner
Office of Petitions

SPE Gaffin

SPE RESPONSE FOR CERTIFICATE OF CORRECTION

Paper No.: 6/23/06

DATE : 4/26/06

TO SPE OF : ART UNIT 2165

SUBJECT : Request for Certificate of Correction for Appl. No.: 10/154,751 Patent No.: 7020656

Please respond to this request for a certificate of correction within 7 days.

Please review the requested changes/corrections as shown in the **COCIN** document(s) in the IFW application image. No new matter should be introduced, nor should the scope or meaning of the claims be changed.

Please complete the response (see below) and forward the completed response to scanning using document code **COCX**.

Lamonte M. Newsome
Certificates of Correction Branch
703-308-9390 ext. 112

Thank You For Your Assistance

The request for issuing the above-identified correction(s) is hereby:
Note your decision on the appropriate box.

- ☐ **Approved** — **All** changes apply.
- ☒ **Approved in Part** — Specify below which changes **do not** apply.
- ☐ **Denied** — State the reasons for denial below.

Comments: The amendment to claim 4, line 1 (col 18, line 42) changing "first data" to just "data" structure would lead to a 112.2 as claim 1 sets forth both a "first" + "second" data structure. Would the proposed amendment to claim 4 refer to a "first" or "second" data structure. This would lead to vague + indefinite language.

SPE

2165
Art Unit

UNITED STATES PATENT AND TRADEMARK OFFICE

Commissioner for Patents
United States Patent and Trademark Office
P.O. Box 1450
Alexandria, VA 22313-1450
www.uspto.gov

Jon Murray Schroeder
Suite # 148-323
100 E. Whitestone Blvd.
Cedar Park TX 78613

COPY MAILED

APR 0 4 2005

OFFICE OF PETITIONS

In re Application of	:
Schroeder et al.	:
Application No. 10/154,757	: ON PETITION
Filed: May 23, 3003	:
Attorney Dck't. No. N/a	:

This is a decision on the communications filed June 7, 2004, which are being treated as (1) a petition under 37 CFR 1.183 requesting waiver of 37 CFR 1.64 and acceptance of the concurrently filed supplemental declaration lacking execution by Schroeder, (2) a petition under 37 CFR 1.48 to amend the inventive entity to add Anthony P. .Bellezza, and (3) a petition under 37 CFR 1.182 and MPEP 402.10, appointment of a power of attorney for Bellezza.

The petitions are **granted**.

The above-identified application as filed named Jon Schroeder and Gerald Hirsch as joint inventors. The instant correspondence, by way of a petition styled as filed under 37 CFR 1.47 (sic) asserts that Anthony P. Bellezza is also a joint inventor, provides a declaration under 37 CFR 1.63 signed by Messrs. Bellezza and Hirsch, but lacking the signature of Mr. Schroeder, a statement of lack of deceptive intent by Bellezza as required by 37 CFR 1.48(a)(1), and also the allegation that Schroeder, through his counsel, has disputed the instant asserted joint inventorship, and notwithstanding service by mail, has not executed the declaration naming Bellezza as a joint inventor. Belleza also seeks, unilaterally, to appoint counsel associated with customer No. 29450 and change the correspondence address.

As explained in MPEP 201.03, petitions under 37 CFR 1.47 are only applicable to an original oath or declaration and are not applicable to the reexecution (or lack of execution) of a supplemental oath or declaration by Schroeder. In such circumstances, a petition under 37 CFR 1.183 must be considered requesting waiver of the requirement of 37 CFR 1.64 that each of the actual inventors, i.e., inventor Schroeder, execute the instant oath or declaration. Accordingly the fee for a petition for waiver of the rules is required in addition to the fee for a amending the inventorship under 37 CFR 1.48. Inspection of USPTO assignment records fails to reveal any assignment of

the originally named inventors has been recorded against this application and it is presumed that is why no written consent by an assignee has been proffered.

37 CFR 1.48(a) requires that an amendment to the named inventive entity be accompanied by: (1) a petition including a statement from each person being added and from each person being deleted as an inventor that the error occurred without deceptive intention on his or her part; (2) an oath or declaration by each actual inventor or inventors as required by 37 CFR 1.63 or as permitted by 37 CFR 1.42, 1.43 or 1.47; (3) the fee set forth in 37 CFR 1.17 (i); and (4) the written consent of any existing assignee, if any of the originally named inventors has executed an assignment.

In view of the circumstances recounted in the petition, it is agreed that justice would be served by waiver of the rules and acceptance of the declaration lacking the signature of Schroeder.

In view of the papers filed June 7, 2004, it has been found that this non provisional application, as filed, through error and without deceptive intent, improperly set forth the inventorship, and accordingly, this application has been corrected in compliance with 37 CFR 1.48 (a). The inventorship of this application has been changed by the addition of Anthony P. Bellezza, Parkesburg, PA.. A corrected filing receipt is being mailed to the address above and a courtesy copy sent to counsel who filed the petition.

The requested power of attorney is granted under the provisions of 37 CFR 1.182 and MPEP 402.10, which is a limited appointment of counsel for Bellezza. See MPEP 402.10 Inspection of the record reveals that except for the declaration, incoming correspondence has only been signed by Schroeder. Messrs. Schroeder and Hirsch are **each** advised that pursuant to 37 CFR 1.33(b)(4) **each** pro se inventor must sign each and every paper filed with the USPTO. In accordance with MPEP 402.10 and 37 CFR 1.182, the requested appointment of those counsel associated with customer No. 29450 to represent Mr. Bellezzo is **granted** as of the mail date of this decision.

In order to assure that all interests are properly and effectively represented, all further correspondence to the United States Patent and Trademark Office (USPTO) in this application--or resultant patent-- must be signed **both** by counsel currently associated with customer No. 29450, for Bellezzo **AND each** of Mssrs. Schroeder and Hirsch. See MPEP 402.10:

> The acceptance of such papers by petition under 37 CFR 1.182 will result in more than one attorney, agent, applicant, or owner prosecuting the application at the same time. Therefore, each of these parties must sign all subsequent replies submitted to the Office. See In re Goldstein, 16 USPQ2d 1963 (Dep. Assist. Comm'r Pat. 1988).

Mr Schroeder, who alone signed the previous correspondence and whose correspondence address–as previously concurred in by Hirsch-- remains the address of record, will also be responsible for coordinating all replies or submissions to the USPTO. See MPEP 402.10. *Any registered practitioner signing subsequent papers must indicate whom he or she represents.* The correspondence address remains that of Mr. Schroeder as given above, as the provisions of the USPTO do not permit Mr. Bellezzo, or his counsel to alone control the prosecution of this application. See Goldstein supra. It should be noted that the USPTO does not have the ability to recognize more than one correspondence address at a time for a given application, so

inspection of PAIR records will not reveal the names or address of counsel associated with customer No. 29450.

All parties are reminded that dual correspondence is not permitted, and will not be undertaken by the USPTO. Any party that is not in agreement with the currently named inventorship may wish to proceed by filing a continuing application as suggested in MPEP 409.03(i). The USPTO does not wish to become embroiled, ex parte, in inventorship disputes, and to the extent that it is able, seeks to protect the interests of all parties.

Fees totaling $260, for the requisite petitions under 37 CFR 1.182 and § 1.183, have been charged to counsel's deposit account as authorized. The $130 for the 1.48 petition was already charged.

This application is being referred to the Technology Center.

Telephone inquiries relative to this decision should be directed to the undersigned at (703) 305-1820.

Brian Hearn
Petitions Examiner
Office of Petitions
Office of the Deputy Commissioner
for Patent Examination Policy

Enclosure: Corrected Filing Receipt

cc:
BARLEY SNYDER, LLC
1000 WESTLAKES DRIVE, SUITE 275
BERWYN, PA 19312

Enclosure for cc: Corrected Filing Receipt

UNITED STATES PATENT AND TRADEMARK OFFICE

Commissioner for Patents
United States Patent and Trademark Office
P.O. Box 1450
Alexandria, VA 22313-1450
www.uspto.gov

Jon Murray Schroeder
Suite # 148-323
100 E. Whitestone Blvd.
Cedar Park TX 78613

COPY MAILED

SEP 2 9 2008

OFFICE OF PETITIONS

In re Application of
Jon Murray Schroeder. Gerald Phillip Hirsch and Anthony Bellezza
Application No. 10/154,757
Filed: May 23, 2002
Title: Torus Semiconductor Thermoelectric Device

DECISION ON PETITIONS

This is a decision on the petition under 37 CFR 1.47 and 1.137(b), filed February 21, 2007.

The petitions are **DISMISSED**.

Petitioner Bellezza, represented by attorney Salvatore Anastasi has filed the instant petition requesting that prosecution of the above-identified application resume without co-inventors Schroeder and Hirsh. Petitioner contends that the above-identified application is abandoned because the examiner refused entry of the amendments submitted by inventor Bellezza because the amendment was not in compliance with 37 CFR 1.33(b)(4) and MPEP 402.10.

The petition filed under 37 CFR 1.47 is not appropriate. Petitions under 37 CFR 1.47 are only applicable to the initial execution of an original oath or declaration by a given inventor and are not applicable to the reexecution of another or supplemental oath or declaration by that originally signing inventor. Here a supplemental oath or declaration is not required. Thus, treatment under 37 CFR 1.47 is not warranted.

The petition filed under 37 CFR 1.137(b) cannot be treated as it is not signed by the appropriate parties. The signatures of inventors and Schroeder and Hirsch have not been provided.[1] A petition decision rendered on April 4, 2005, which added inventor Bellezza clearly informed applicants that pursuant to 37 CFR 1.182 and MPEP 402.10 limited appointment of counsel for applicant Bellezza was granted. Thus, pursuant to 37 CFR 1.33(b)(4) all of the applicants are required to sign each and every paper filed with the Office. In this instance since Bellezza authorized power of attorney to attorneys associated to customer number 29,450, an attorney and inventors Schroeder and Hirsch are required to execute papers submitted to the Office. The acceptance of such papers by petition under 37 CFR 1.36(a) or 1.183 will result in more than one attorney, agent, applicant, or owner prosecuting the application at the same time. Therefore, each of these parties must sign all subsequent replies submitted to the Office. See In re Goldstein, 16 USPQ2d 1963 (Dep. Assist. Comm'r Pat. 1988). MPEP 402.10.

It is well settled that the Office is not the appropriate forum for resolving a dispute concerning the ownership of an application, and, as such, the USPTO will not permit itself to become embroiled in

[1] Although petitioner states that inventor Hirsch assigned his interest to inventor Schroeder, assignment records do not reflect such a transfer has occurred.

ownership disputes. See, Ex Parte Harrison, 1925 Dec. Comm'r Pat. 122, 123 (Comm'r Pat. 1924); In re Moller, 1904 Dec. Comm'r Pat. 70, 71 (Comm'r Pat. 1904); Ex Parte McTammany, 1900, 168, 181 (Comm'r Pat. 1900); Ex Parte McFarlane, 1896 Dec. Comm'r Pat. 37,38 (Comm'r Pat. 1896); Ex Parte Gallatin, 1892 Dec. Comm'r Pat 106 (Comm'r Pat. 1892).

Indeed, the USPTO has no authority to decide ownership issues. See Cedars-Sinai Medical Center v. Watkins, 11 F.3d. 1573, 1581 n.10, 29 USPQ2d 1188, 1194 n.10 (Fed. Cir 1993), cert. denied, 114 S. Ct. (1994). Rather, state law governs contractual obligations and transfers of property rights, including those relating to patents. See Regents of the University of New Mexico v. Knight, 66 USPQ2d 1001, 1008 (Fed. Cir. 2003). The USPTO cannot settle disputes as to title, or convert whatever equitable title that might exist in this application for petitioner simply by inspection of the documents upon which petitioner relies. Rather, a judicial tribunal is the appropriate forum to resolve such controversy. See Jim Arnold Corp. v. Hydrotech Sys., Inc., 109 F.3d 1567, 1572, 42 USPQ2D 1119, 1123 (Fed. Cir. 1997)("the question of who owns the patent right and on what terms typically is a question exclusively for state courts"); Roach v. Crouch, 24 N.W. 2d 400, 33 USPQ2D 1361 (Iowa 1994) (patent ownership issue properly triable in state court); In re Haines, 1900 C.D. 102, 103 (Comm'r Pat. 1900)(same).

In light of the above, the petition filed under 37 CFR 1.137(b) will not be treated. The $200 1.47 petition fee will be refunded.

On a one time basis only, a courtesy copy of this decision is being sent to applicant Bellezza via legal representative, attorney Anastasi . The USPTO will not undertake dual correspondence.

Charlema Grant
Petitions Attorney
Office of Petitions

Cc: Salvatore Anastasi
Barley Snyder, LLC
1000 Westlakes Drive
Suite 275
Berwyn, PA 19312

UNITED STATES PATENT AND TRADEMARK OFFICE

Commissioner for Patents
United States Patent and Trademark Office
P.O. Box 1450
Alexandria, VA 22313-1450
www.uspto.gov

STACY L. TAYLOR
DLA PIPER US LLP
Suite 1100
4365 Executive Drive
San Diego CA 92121-2133

COPY MAILED

DEC 27 2007

OFFICE OF PETITIONS

In re Application of :
Charles E. Prussak et al :
Application No. 10/154,759 : DECISION ON PETITION
Filed: May 23, 2002 :
Attorney Docket No. ST-UCSD3190 :

This is a decision on the petition under 37 CFR 1.137(b), filed June 26, 2007, to revive the above-identified application.

The petition is **GRANTED**.

This application became abandoned for failure to reply in a timely manner to the Restriction Requirement, mailed November 30, 2006, which set a shortened statutory period for reply of one (1) month or thirty (30) days (whichever is later). No extensions of time were obtained under the provisions of 37 CFR 1.136(a). Accordingly, this application became abandoned on January 3, 2007 (December 30, 2006, the due date, was a Saturday and January 1, 2007 was a Federal holiday).

The petition satisfies the requirements of 37 CFR 1.137(b) in that petitioner has supplied (1) the reply in the form of an election, (2) the petition fee of $750, and (3) an adequate statement of unintentional delay. Accordingly, the reply to the Office action of November 30, 2006 is accepted as being unintentionally delayed.

The rule at 7 CFR 1.137(b)(3) requires a statement that "the entire delay in filing the required reply from the due date for the reply until the filing of a grantable petition pursuant to 37 CFR 1.137(b) was unintentional." Since the statement appearing in the petition varies from the language required by 37 CFR 1.137(b)(3), the statement is being construed as the required statement. Petitioner must notify the Office if this is **not** a correct reading of the statement appearing in the petition.

It is not apparent whether the person signing the statement of unintentional delay was in a position to have firsthand or direct knowledge of the facts and circumstances of the delay at issue. Nevertheless, such statement is being treated as having been made as the result of a reasonable inquiry into the facts and circumstances of such delay. See 37 CFR 10.18(b) and Changes to Patent Practice and Procedure; Final Rule Notice, 62 Fed. Reg. 53131, 53178 (October 10, 1997), 1203 Off. Gaz. Pat. Office 63, 103 (October 21, 1997). In the event that such an inquiry has not been made, petitioner must make such an inquiry. If such inquiry results in the discovery that it is not correct that the entire delay in filing the required reply from the due date for the reply until the filing of a grantable petition pursuant to 37 CFR 1.137(b) was unintentional, petitioner must notify the Office.

An extension of time under 37 CFR 1.136 must be filed prior to the expiration of the maximum extendable period for reply. *See* In re Application of S, 8 USPQ2d 1630, 1631 (Comm'r Pats. 1988). Since the $510 extension of time fee submitted with the petition on June 26, 2007 was subsequent to the maximum extendable period for reply, this fee is unnecessary and will be credited to petitioner's deposit account in due course.

Telephone inquiries concerning this decision should be directed to the undersigned at (571) 272-3218 or to the Office of Petitions Help Desk at (571) 272-3282 after January 3, 2008.

This application is being referred to Technology Center AU 1644 for appropriate action in the normal course of business on the reply received June 26, 2007.

Frances Hicks

Frances Hicks
Petitions Examiner
Office of Petitions

UNITED STATES PATENT AND TRADEMARK OFFICE

Commissioner for Patents
United States Patent and Trademark Office
P.O. Box 1450
Alexandria, VA 22313-1450
www.uspto.gov

MAILED
FROM DIRECTORS OFFICE

SEP 0 9 2005

TECHNOLOGY CENTER 3600

Mary J. Breiner
BREINER & BREINER, L.L.C.
P.O. Box 19290
Alexandria, VA 22320-0290

In re Application of Fabio Perini Application No. 10/154,786 Filed: May 28, 2002	: : : :	DECISION ON PETITION TO WITHDRAW THE HOLDING OF ABANDONMENT

For: COVERING SYSTEM FOR BUILDINGS

This is a decision on Applicant's renewed petition to withdraw the holding of abandonment, filed in the United States Patent and Trademark Office (USPTO) on October 26, 2004.

The petition is **GRANTED**.

A review of the file record reveals that a non-final Office action (herein after referred to as Office action) was mailed to applicant on March 15, 2004. Since a response was not received before the expiration of the six-month statutory period for reply, the application was held abandoned and a Notice to that effect was mailed on October 8, 2004.

Applicant's petition indicates that the Office action mailed March 15, 2004 was never received. Petitioner has submitted evidence showing the failure of the Office to mail this Office action to the correspondence address associated with this application.

The Office action of March 15, 2004 was mailed to the address

115 North Henry Street
P.O. Box 19290
Alexandria, VA 22314.

However the correspondence address for this application is:

115 North Henry Street
P.O. Box 19290
Alexandria, VA 22320-0290

as filed in the original oath/declaration. The Office action of March 15, 2004 should have been mailed to this address.

Regarding Applicant's request for patent term adjustment, any such adjustment shall be made according to 35 USC 154 at the time of resending the Notice of Allowance.

The application is being forwarded to the Supervisory Legal Instruments Examiner with instructions to withdraw the abandonment and return the application to pending status.

Steven N. Meyers
Special Programs Examiner
Technology Center 3600
(571) 272-6611

SNM/js: 8/16/05

SPE RESPONSE FOR CERTIFICATE OF CORRECTION

Paper No.: _____

DATE : July 21, 2005

TO SPE OF : ART UNIT 2135

SUBJECT : Request for Certificate of Correction on Patent No.: 6,898,288 / 10/154,795

A response is requested with respect to the accompanying request for a certificate of correction.

Please complete this form and return with file, within 7 days to:
Palm location **7580, Certificates of Correction Branch – South Tower – 9A22**
If response is for an IFW, **return to employee (named below) via PUBSCofC Team in MADRAS.**
With respect to the change(s) requested, correcting Office and/or Applicant's errors, should the patent read as shown in the certificate of correction (COCIN)? No new matter should be introduced, nor should the scope or meaning of the claims be changed.

Magdalene Talley

Thank You For Your Assistance

Certificates of Correction Branch
Tel. No. 703-308-9309 ext. 116

The request for issuing the above-identified correction(s) is hereby:
Note your decision on the appropriate box.

- [x] **Approved** — All changes apply.
- [ ] **Approved in Part** — Specify below which changes **do not** apply.
- [ ] **Denied** — State the reasons for denial below.

Comments:

_____

_____

_____

_____

_____

SPE — **Art Unit** 2135

UNITED STATES PATENT AND TRADEMARK OFFICE

Commissioner for Patents
United States Patent and Trademark Office
P.O. Box 1450
Alexandria, VA 22313-1450
www.uspto.gov

YOUNG & THOMPSON
745 SOUTH 23RD STREET
2ND FLOOR
ARLINGTON, VA 22202

COPY MAILED

NOV 1 4 2005

OFFICE OF PETITIONS

ON PETITION

In re Patent No. 6,870,313	:	
Issue Date: March 22, 2005	:	
Application No. 10/154,841	:	
Filed: May 28, 2002	:	
Attorney Docket No. 2512-1017	:	

This is a decision on the petition filed August 23, 2005, which is being treated as a request under 37 CFR 3.81(b)[1] to correct the assignee on the front page of the above-identified patent by way of Certificate of Correction.

The petition is dismissed.

Petitioner states, "As can be clearly seen from the accompanying original Assignment document, only 50% of the interest was conveyed and recorded on August 27, 2002, well before issuance of the patent." However, this document is not found in the patent file for review by this office. Petitioner should submit copies of all the documents originally submitted for assignment recordation with any request for reconsideration that petitioner might file.

Further correspondence with respect to this matter should be addressed as follows:

By mail: Mail Stop Petition
Commissioner for Patents
Box 1450
Alexandria, VA 22313

By FAX: (571) 273-8300
Attn: Office of Petitions

By hand: Customer Service Window
Randolph Building
401 Dulany Street
Alexandria, VA 22314

[1] *See* Official Gazette of June 22, 2004.

Telephone inquiries concerning this matter may be directed to the undersigned at (571) 272-3228.

Edward J. Tannouse
Petitions Attorney
Office of Petitions
United States Patent and Trademark Office

UNITED STATES PATENT AND TRADEMARK OFFICE

Commissioner for Patents
United States Patent and Trademark Office
P.O. Box 1450
Alexandria, VA 22313-1450
www.uspto.gov

YOUNG & THOMPSON
745 SOUTH 23rd STREET
2nd FLOOR
ARLINGTON, VA 22202

COPY MAILED

JAN 2 6 2006

OFFICE OF PETITIONS

In re Patent No. 6,870,313	:	
Issue Date: March 22, 2005	:	
Application No. 10/154,841	:	ON PETITION
Filed: May 28, 2002	:	
Attorney Docket No. 2512-1017	:	

This is a decision on papers filed January 4, 2006, which is being treated as a renewed request under 37 CFR 3.81(b)[1] to correct the assignee on the front page of the above-identified patent by way of Certificate of Correction.

The petition is granted.

Telephone inquiries concerning this matter may be directed to the undersigned at (571) 272-3228. Any questions concerning the issuance of the Certificate of Correction should be directed to the Certificates of Correction Branch at (703) 305-8309.

The file is being forwarded to the Certificates of Correction Branch for issuance of the requested Certificate of Correction.

Edward J. Tannouse
Petitions Attorney
Office of Petitions
Office of the Deputy Commissioner
for Patent Examination Policy

[1] *See* Official Gazette of June 22, 2004.

UNITED STATES PATENT AND TRADEMARK OFFICE

Commissioner for Patents
United States Patent and Trademark Office
P.O. Box 1450
Alexandria, VA 22313-1450
www.uspto.gov

MYERS BIGEL SIBLEY & SAJOVEC
P.O. BOX 37428
RALEIGH, NC 27627

COPY MAILED
OCT 27 2008
OFFICE OF PETITIONS

In re Patent No. 6,771,537 :
Issue Date: August 3, 2004 :
Application No. 10/154,853 : ON PETITION
Filed: May 28, 2002 :
Attorney Docket No. 500.35405CX4 :

This is a decision on the petition filed July 1, 2008, which is being treated as a petition under 37 CFR 3.81(b)[1] to change the assignee's name on the front page of the above-identified patent by way of a Certificate of Correction.

The petition is **granted.**

Telephone inquiries concerning this matter may be directed to the undersigned at (571) 272-3210. Any questions concerning the issuance of the Certificate of Correction should be directed to the Certificates of Correction Branch at (703) 305-8309.

This application is being forwarded to the Certificates of Correction Branch for issuance of the requested Certificate of Correction.

Irvin Dingle
Petitions Examiner
Office of Petitions

[1] See Official Gazette of June 22, 2004

SPE RESPONSE FOR CERTIFICATE OF CORRECTION

Paper No.: _____

DATE : 10/2/2004

TO SPE OF : ART UNIT 1700

10/154887

SUBJECT : Request for Certificate of Correction on Patent No.: 6,762,003

A response is requested with respect to the accompanying request for a certificate of correction.

Please complete this form and return with file, within **7** days to:
Certificates of Correction Branch - PK 3-922
Palm location **7580** - Tel. No. 305-8309

With respect to the change(s) requested, correcting Office and/or Applicant's errors, should the patent read as shown in the certificate of correction? No new matter should be introduced, nor should the scope or meaning of the claims be changed.

Ernest C. White, LIE305-8339
Certificates of Correction Branch

Thank You For Your Assistance

The request for issuing the above-identified correction(s) is hereby:
Note your decision on the appropriate box.

- ☑ **Approved** — **All** changes apply.
- ☐ **Approved in Part** — Specify below which changes **do not** apply.
- ☐ **Denied** — State the reasons for denial below.

Comments:

_____

_____

_____

_____

_____

Cynthia H Kelly — **SPE**

1752 — **Art Unit**

SPE RESPONSE FOR CERTIFICATE OF CORRECTION

Paper No.: _____

DATE : March 10, 2007

TO SPE OF : ART UNIT 1773

SUBJECT : Request for Certificate of Correction on Patent No.: **7094460 B2 – 10/154894**

A response is requested with respect to the accompanying request for a certificate of correction.

Please complete this form and return with file, within **7** days to:
Palm location **7580, Certificates of Correction Branch – South Tower – 9A22**
If response is for an IFW, **return to employee (named below) via PUBSCofC Team in MADRAS.**
With respect to the change(s) requested, correcting Office and/or Applicant's errors, should the patent read as shown in the certificate of correction (COCIN)? No new matter should be introduced, nor should the scope or meaning of the claims be changed.

Thank You For Your Assistance

Elisha Evans
Certificates of Correction Branch
Tel. No. 703-308-9390 EXT 110

The request for issuing the above-identified correction(s) is hereby:
Note your decision on the appropriate box.

- [x] **Approved** — All changes apply.
- [ ] **Approved in Part** — Specify below which changes **do not** apply.
- [ ] **Denied** — State the reasons for denial below.

Comments:

Corrections of clerical/typographical errors

Carl Charney
SPE

1773
Art Unit

SPE RESPONSE FOR CERTIFICATE OF CORRECTION

Paper No.:20080313

DATE : March 13, 2008

TO SPE OF : ART UNIT 1797

SUBJECT : Request for Certificate of Correction on Patent No.: 10154902

A response is requested with respect to the accompanying request for a certificate of correction.

Please complete this form and return with file, within **7** days to:
Certificates of Correction Branch - ST (South Tower) 9A22
Palm location **7590** - Tel. No. (703) 305-8309

With respect to the change(s) requested, correcting Office and/or Applicant's errors, should the patent read as shown in the certificate of correction? No new matter should be introduced, nor should the scope or meaning of the claims be changed.

Thank You For Your Assistance **Certificates of Correction Branch**

The request for issuing the above-identified correction(s) is hereby:

Note your decision on the appropriated box.

☒ **Approved** All changes apply.

☐ **Approved in Part** Specify below which changes **do not** apply.

☐ **Denied** State the reasons for denial below.

Comments:

ok

DUANE SMITH
SUPERVISORY PATENT EXAMINER

SPE: /Duane Smith/ 3-13-08 Art Unit 1797

OIPE
JUL 24 2002
PATENT & TRADEMARK OFFICE

MP(S)

PATENT APPLICATION

IN THE UNITED STATES PATENT AND TRADEMARK OFFICE

In re application of

Yuichi HOSOI

Appln. No.: 10/154,925

Confirmation No.: 9846

Filed: May 28, 2002

Docket No: Q70330

Group Art Unit: 1642

Examiner: Not Yet Assigned

For: STIMULABLE PHOSPHOR SHEET FOR DETECTION OF SUBSTANCES ORIGINATING FROM LIVING BODY OR ITS ANALOGUES

RESPONSE TO NOTICE TO FILE MISSING PARTS OF NONPROVISIONAL APPLICATION FILED UNDER 37 CFR 1.53(B) - FILING DATE GRANTED

ATTN: BOX MISSING PARTS
Commissioner for Patents
Washington, D.C. 20231

Sir:

In response to the "Notice to File Missing Parts of Nonprovisional Application filed under 37 CFR 1.53(b) - Filing Date Granted," mailed June 24, 2002, for the above application, Applicant respectfully submits herewith the Declaration for the above identified application properly executed by the inventors. Also enclosed please find executed Declaration and Power of Attorney and executed Assignment.

A check for the statutory fee of $130.00 is attached. The USPTO is directed and authorized to charge all required fees, except for the Issue Fee and the Publication Fee, to Deposit Account No. 19-4880. Please also credit any overpayments to said Deposit Account. A duplicate copy of this paper is attached.

Respectfully submitted,

Mark Boland

Mark Boland
Registration No. 32,197

SUGHRUE MION, PLLC
2100 Pennsylvania Avenue, N.W.
Washington, D.C. 20037-3213
Telephone: (202) 293-7060
Facsimile: (202) 293-7860
MXB/mch
Date: July 24, 2002

UNITED STATES PATENT AND TRADEMARK OFFICE

COMMISSIONER FOR PATENTS
UNITED STATES PATENT AND TRADEMARK OFFICE
WASHINGTON, D.C. 20231
www.uspto.gov

APPLICATION NUMBER	FILING/RECEIPT DATE	FIRST NAMED APPLICANT	ATTORNEY DOCKET NUMBER
10/154,925	05/28/2002	Yuichi Hosoi	Q70330

OIPE JC71
JUL 24 2002
PATENT & TRADEMARK OFFICE

SUGHRUE MION, PLLC
2100 Pennsylvania Avenue, NW
Washington, DC 20037-3213

CONFIRMATION NO. 9846

FORMALITIES LETTER

OC000000008333630

Date Mailed: 06/24/2002

NOTICE TO FILE MISSING PARTS OF NONPROVISIONAL APPLICATION

FILED UNDER 37 CFR 1.53(b)

Filing Date Granted

Items Required To Avoid Abandonment:

An application number and filing date have been accorded to this application. The item(s) indicated below, however, are missing. Applicant is given **TWO MONTHS** from the date of this Notice within which to file all required items and pay any fees required below to avoid abandonment. Extensions of time may be obtained by filing a petition accompanied by the extension fee under the provisions of 37 CFR 1.136(a).

- The oath or declaration is missing.
  A properly signed oath or declaration in compliance with 37 CFR 1.63, identifying the application by the above Application Number and Filing Date, is required.
- To avoid abandonment, a late filing fee or oath or declaration surcharge as set forth in 37 CFR 1.16(l) of $130 for a non-small entity, must be submitted with the missing items identified in this letter.

Items Required To Avoid Processing Delays:

The item(s) indicated below are also required and should be submitted with any reply to this notice to avoid further processing delays.

SUMMARY OF FEES DUE:

Total additional fee(s) required for this application is **$130** for a Large Entity

- **$130** Late oath or declaration Surcharge.

07/26/2002 SSESHE1 00000014 10154925
01 FC:105 130.00 OP

A copy of this notice MUST be returned with the reply.

CK. Chowe

A DOCPHOENIX

DECLARATION AND POWER OF ATTORNEY

#3

As a below named inventor, I hereby declare that my residence, post office address and citizenship are as stated below next to my name; that I verily believe I am the original, first and sole inventor (if only one name is listed below) or a joint inventor (if plural names are listed below) of the subject matter claimed and for which a patent is sought in the application entitled:

STIMULABLE PHOSPHOR SHEET FOR DETECTION OF SUBSTANCES ORIGINATING FROM LIVING BODY OR ITS ANALOGUES

which application is:

___ the attached application (for original application)

___ application Serial No. 10/154,925, filed May 28, 2002, and amended on _____ (for declaration not accompanying application)

OIPE JC78 JUL 24 2002 PATENT & TRADEMARK OFFICE

that I have reviewed and understand the contents of the specification of the above-identified application, including the claims, as amended by any amendment referred to above; that I acknowledge my duty to disclose information of which I am aware which is material to the patentability of this application under 37 C.F.R. 1.56, that I hereby claim foreign priority benefits under Title 35, United States Code §119, §172 or §365 of any foreign application(s) for patent or inventor's certificate listed below and have also identified on said list any foreign application for patent or inventor's certificate on this invention having a filing date before that of the application on which priority is claimed:

Application Number	Country	Filing Date	Priority Claimed (yes or no)
2001-157462	Japan	May 25, 2001	yes

I hereby claim the benefit of Title 35, United States Code §120 of any United States application(s) listed below and, insofar as the subject matter of each of the claims of this application is not disclosed in a listed prior United States application in the manner provided by the first paragraph of Title 35, United States Code, §112, I acknowledge my duty to disclose any information material to the patentability of this application under 37 C.F.R. 1.56 which occurred between the filing date of the prior application and the national or PCT international filing date of this application:

Application Serial No.	Filing Date	Status (patented, pending, abandoned)

I hereby appoint John H. Mion, Reg. No. 18,879; Donald E. Zinn, Reg. No. 19,046; Thomas J. Macpeak, Reg. No. 19,292; Robert J. Seas, Jr., Reg. No. 21,092; Darryl Mexic, Reg. No. 23,063; Robert V. Sloan, Reg. No. 22,775; Peter D. Olexy, Reg. No. 24,513; J. Frank Osha, Reg. No. 24,625; Waddell A. Biggart, Reg. No. 24,861; Robert G. McMorrow, Reg. No. 19,093; Louis Gubinsky, Reg. No. 24,835; Neil B. Siegel, Reg. No. 25,200; David J. Cushing, Reg. No. 28,703; John R. Inge, Reg. No. 26,916; Joseph J. Ruch, Jr., Reg. No. 26,577; Sheldon I. Landsman, Reg. No. 25,430; Richard C. Turner, Reg. No. 29,710; Howard L. Bernstein, Reg. No. 25,665; Alan J. Kasper, Reg. No. 25,426; Kenneth J. Burchfiel, Reg. No. 31,333; Gordon Kit, Reg. No. 30,764; Susan J. Mack, Reg. No. 30,951; Frank L. Bernstein, Reg. No. 31,484; Mark Boland, Reg. No. 32,197; William H. Mandir, Reg. No. 32,156; Scott M. Danieis, Reg. No. 32,562; Brian W. Hannon, Reg. No. 32,778 and Abraham J. Rosner, Reg. No. 33,276, my attorneys to prosecute this application and to transact all business in the Patent and Trademark Office connected therewith, and request that all correspondence about the application be addressed to SUGHRUE, MION, ZINN, MACPEAK & SEAS, 2100 Pennsylvania Avenue, N.W., Washington, D.C. 20037-3202.

I hereby declare that all statements made herein of my own knowledge are true and that all statements made on information and belief are believed to be true; and further that these statements were made with the knowledge that willful false statements and the like so made are punishable by fine or imprisonment, or both, under Section 1001 of Title 18 of the United States Code and that such willful false statements may jeopardize the validity of the application or any patent issuing thereon.

Date July 4, 2002

First Inventor Yuichi ----- Hosoi
(First Name / Middle Initial / Last Name)

Signature Yuichi Hosoi

Residence Kanagawa, Japan

Post Office Address c/o Fuji Photo Film Co., Ltd.
No. 798, Miyanodai, Kaisei-machi, Ashigara-kami-gun
Kanagawa, 258-8538 Japan

Citizenship Japan

UNITED STATES PATENT AND TRADEMARK OFFICE

COMMISSIONER FOR PATENTS
UNITED STATES PATENT AND TRADEMARK OFFICE
P.O. BOX 1450
ALEXANDRIA, VA 22313-1450
www.uspto.gov

#8

MAY 24 2004

Joseph Lucci
Woodcock Washburn LLP
One Liberty Place – 46th Floor
Philadelphia, PA 19103

In re Application of
Manoharan et al :
Serial No.: 10/154993 : DECISION ON PETITION
Attorney Docket No.: ISIS-5060

This is in response to "Petition for Withdrawal of Abandonment" filed April 15, 2004.

On February 25, 2003, an Office action was mailed. On April 24, 2003, a letter requesting a clean copy of 1449 was mailed. On February 26, 2004 a Notice of Abandonment was mailed for failure to timely file a proper response. On April 15, 2004, the instant petition was filed.

The application history has been reviewed. The petition is granted.

Petition is granted.

The application has been returned to pending status and will be forwarding to examiner for consideration of the response after mailing of this letter.

Cecilia Tsang for
Jasemine Chambers
Director, Technology Center 1600

Best Available Copy

SPE RESPONSE FOR CERTIFICATE OF CORRECTION

Paper No.: _____

DATE : June 28, 2006

TO SPE OF : ART UNIT 1637

SUBJECT : Request for Certificate of Correction for Appl. No.: 10/154993 Patent No.: 6,919,439

Please respond to this request for a certificate of correction within 7 days.

Please review the requested changes/corrections as shown in the **COCIN** document(s) in the IFW application image. No new matter should be introduced, nor should the scope or meaning of the claims be changed.

Please complete the response (see below) and forward the completed response to scanning using document code **COCX**.

Magdalene Talley

Certificates of Correction Branch

703-308-9390 ext. 116

Thank You For Your Assistance

The request for issuing the above-identified correction(s) is hereby:

Note your decision on the appropriate box.

- ☒ **Approved** — **All** changes apply.
- ☐ **Approved in Part** — Specify below which changes **do not** apply.
- ☐ **Denied** — State the reasons for denial below.

Comments: _____

GARY BENZION, PH.D
SUPERVISORY PATENT EXAMINER
TECHNOLOGY CENTER 1600

SPE **Art Unit** 1637

PTOL-306 (REV. 7/03)

U.S. DEPARTMENT OF COMMERCE Patent and Trademark Off

UNITED STATES PATENT AND TRADEMARK OFFICE

COMMISSIONER FOR PATENTS
UNITED STATES PATENT AND TRADEMARK OFFICE
P.O. BOX 1450
ALEXANDRIA, VA 22313-1450
www.uspto.gov

FINNEGAN, HENDERSON, FARABOW, GARRETT & DUNNER LLP
901 NEW YORK AVENUE, NW
WASHINGTON DC 20001-4413

COPY MAILED

MAR 3 1 2008

OFFICE OF PETITIONS

In re Application of	:	
Minamihaba, et al.	:	LETTER REGARDING PTA
Application No. 10/155,015	:	
Filed: May 28, 2002	:	
Atty. Dkt. No.: 04329.2280-01	:	

This letter is in response to the "NOTICE OF ERROR IN THE DETERMINATION OF PATENT TERM ADJUSTMENT," filed November 19, 2007. The Office thanks applicants for their good faith and candor in bringing this to our attention.

The Determination of Patent Term Adjustment mailed October 17, 2007 indicated that the above-identified application was entitled to a patent term adjustment ("PTA") of 750 days. Applicants indicate that the correct adjustment is 717 days.

The correct Patent Term Adjustment ("PTA") at the time of the allowance is 717 days, as indicated by applicants.

As reflected in the Determination of Patent Term Adjustment mailed October 17, 2007, an adjustment of 750 can be attributed to the Office.

The Office neglected to assess a reduction of 33 days in accordance with 37 CFR 1.704(b) in connection with the request for continued examination (RCE) filed January 31, 2005. The reduction commenced December 30, 2004, the day after the date that is three months after the date that the final rejection was mailed, and ended January 31, 2005, the date that the RCE was filed.

Accordingly, at the time of allowance, the application is entitled to an adjustment 717 days, as indicated by applicants.

As applicants are advising us of a potential error in providing too much patent term adjustment in this application, no fee is due in connection with this matter.

The patent term adjustment indicated in the patent will include any additional patent term accrued pursuant to §§ 1.702(a)(4) and 1.702(b).

This application is being forward to the Office of Patent Publication for issuance of the patent.

Telephone inquiries specific to this matter should be directed to Petitions Attorney Alesia M. Brown at (571) 272-3205.

Kery Fries
Senior Patent Attorney
Office of Patent Legal Administration
Office of Deputy Commissioner
for Patent Examination Policy

Enclosure: Copy of Adjustment PAIR Calculation

Day : Friday
Date: 3/28/2008

PALM INTRANET

Time: 17:23:29

PTA Calculations for Application: 10/155015			
Application Filing Date:	05/28/2002	PTO Delay (PTO):	750
Issue Date of Patent:		Three Years:	0
Pre-Issue Petitions:	0	Applicant Delay (APPL):	0
Post-Issue Petitions:	0	Total PTA (days):	717
PTO Delay Adjustment:	-33		

File Contents History

Number	Date	Contents Description	PTO	APPL	START
76	03/28/2008	ADJUSTMENT OF PTA CALCULATION BY PTO		33	
69	10/17/2007	MAIL NOTICE OF ALLOWANCE			
68	10/15/2007	ISSUE REVISION COMPLETED			
67	10/15/2007	DOCUMENT VERIFICATION			
66	10/15/2007	NOTICE OF ALLOWANCE DATA VERIFICATION COMPLETED			
65	10/05/2007	NOTICE OF ALLOWABILITY			
64	10/04/2007	CASE DOCKETED TO EXAMINER IN GAU			
60	09/05/2007	MAIL BPAI DECISION ON APPEAL - REVERSED	645		37
59	09/05/2007	BPAI DECISION - EXAMINER REVERSED			
58	06/08/2007	DOCKETING NOTICE MAILED TO APPELLANT			
57	06/08/2007	ASSIGNMENT OF APPEAL NUMBER			
56	06/04/2007	APPEAL AWAITING BPAI DOCKETING			
55	04/16/2007	MAIL MISCELLANEOUS COMMUNICATION TO APPLICANT			
54	04/12/2007	MISCELLANEOUS COMMUNICATION TO APPLICANT - NO ACTION COUNT			
53	03/28/2007	ORDER RETURNING UNDOCKETED APPEAL TO THE EXAMINER			
52	12/18/2006	APPEAL AWAITING BPAI DOCKETING			
51	11/07/2006	MAIL REPLY BRIEF NOTED BY EXAMINER			
50	11/06/2006	REPLY BRIEF NOTED BY EXAMINER			
49	09/06/2006	DATE FORWARDED TO EXAMINER			
48	08/23/2006	REPLY BRIEF FILED			
47	07/06/2006	MAIL EXAMINER'S ANSWER			
46	06/29/2006	EXAMINER'S ANSWER TO APPEAL BRIEF			
45	04/26/2006	DATE FORWARDED TO EXAMINER			

44	04/21/2006	APPEAL BRIEF FILED			
43	04/21/2006	REQUEST FOR EXTENSION OF TIME - GRANTED			
40	03/24/2006	MAIL APPEALS CONF. PROCEED TO BPAI			
39	03/24/2006	PRE-APPEALS CONFERENCE DECISION - PROCEED TO BPAI			
38	11/30/2005	REQUEST FOR PRE-APPEAL CONFERENCE FILED			
37	11/30/2005	NOTICE OF APPEAL FILED			
36	09/01/2005	MAIL FINAL REJECTION (PTOL - 326)			
35	08/29/2005	FINAL REJECTION			
34	06/28/2005	DATE FORWARDED TO EXAMINER			
33	06/20/2005	RESPONSE AFTER NON-FINAL ACTION			
32	03/24/2005	MAIL NON-FINAL REJECTION			
31	03/21/2005	NON-FINAL REJECTION			
30	02/14/2005	DATE FORWARDED TO EXAMINER			
29	01/31/2005	AMENDMENT SUBMITTED/ENTERED WITH FILING OF CPA/RCE			
28	02/14/2005	DATE FORWARDED TO EXAMINER			
27	01/31/2005	REQUEST FOR CONTINUED EXAMINATION (RCE)			
26	02/14/2005	DISPOSAL FOR A RCE/CPA/129 (EXPRESS ABANDONMENT IF CPA)			
25	01/31/2005	WORKFLOW INCOMING AMENDMENT IFW			
24	01/31/2005	WORKFLOW - REQUEST FOR RCE - BEGIN			
23	09/29/2004	MAIL FINAL REJECTION (PTOL - 326)			
22	09/28/2004	FINAL REJECTION			
21	08/01/2004	DATE FORWARDED TO EXAMINER			
20	07/14/2004	RESPONSE AFTER NON-FINAL ACTION			
19	07/14/2004	WORKFLOW INCOMING AMENDMENT IFW			
18	04/23/2004	MAIL NON-FINAL REJECTION			
17	04/20/2004	NON-FINAL REJECTION			
16	02/19/2004	DATE FORWARDED TO EXAMINER			
15	02/10/2004	RESPONSE AFTER NON-FINAL ACTION			
14.7	01/08/2004	INFORMATION DISCLOSURE STATEMENT (IDS) FILED			
14	01/08/2004	INFORMATION DISCLOSURE STATEMENT (IDS) FILED			
13	11/10/2003	MAIL NON-FINAL REJECTION	105		-1

12	11/03/2003	NON-FINAL REJECTION			
11	08/26/2003	IFW TSS PROCESSING BY TECH CENTER COMPLETE			
10.7	05/28/2002	INFORMATION DISCLOSURE STATEMENT (IDS) FILED			
10	05/28/2002	INFORMATION DISCLOSURE STATEMENT (IDS) FILED			
9	05/28/2002	PRELIMINARY AMENDMENT			
8	05/28/2002	PRELIMINARY AMENDMENT			
6	07/30/2002	CASE DOCKETED TO EXAMINER IN GAU			
5	07/08/2002	APPLICATION DISPATCHED FROM OIPE			
4	07/05/2002	APPLICATION IS NOW COMPLETE			
2	06/10/2002	IFW SCAN & PACR AUTO SECURITY REVIEW			
1	05/28/2002	INITIAL EXAM TEAM NN			

Search Another: Application# Search

EXPLANATION OF PTA CALCULATION

EXPLANATION OF PTE CALCULATION

To go back, right click here and select Back. To go forward, right click here and select Forward. To refresh, right click here and select Refresh.

Back to OASIS | Home page

UNITED STATES PATENT AND TRADEMARK OFFICE

COMMISSIONER FOR PATENTS
UNITED STATES PATENT AND TRADEMARK OFFICE
P.O. BOX 1450
ALEXANDRIA, VA 22313-1450
www.uspto.gov

BANNER & WITCOFF
1001 G STREET N W
SUITE 1100
WASHINGTON, DC 20001

COPY MAILED
SEP 13 2006
OFFICE OF PETITIONS

In re Application of :
Reinke et al. :
Application No. 10/155,028 :
Filed: May 28, 2002 :
Patent No: 6,910,579 :
Issued: June 28, 2005 :
Title of Invention: :
REFILLABLE FLEXIBLE SHEET DISPENSER :

This is a decision on the petition filed January 20, 2006, under to 37 C.F.R. § 1.183, to correct the assignee data in the above-identified patent after payment of the issue fee. The petition is properly treated as a request under 37 CFR 3.81(b)[1].

The Petition is **granted**.

The address on the petition is different from the address of record. If Petitioner desires to receive further correspondence with respect to this application, a change of correspondence address must be filed. A courtesy copy of this Decision is being forwarded to Petitioner at the address appearing on the petition; however, all future correspondence will be sent to address of record until instructions to the contrary are received.

Patentee is further advised that, in patented files: requests for changes of correspondence address, powers of attorney, revocations of powers of attorney, withdrawal of attorney and submissions under 37 CFR 1.501. Designation of, or changes to, a fee address should be addressed to Mail Stop M Correspondence, Director of the U.S. Patent and Trademark Office, P.O. Box 1450, Alexandria, VA 22313-1450.

Telephone inquiries concerning this matter should be directed to the undersigned at (571) 272-3232. Any questions concerning the

[1] See, 1283 OG 148 22 June 2004, 69 Fed. Reg. 29865 26 May 2004

issuance of the Certificate of Correction should be directed to the Certificate of Correction Branch at (703) 305-8309.

The application is being referred to the Certificate of Corrections Branch for issuance of the requested Certificate of Correction.

Derek L. Woods
Attorney
Office of Petitions

CC: FORT JAMES CORPORATION
PO BOX 899
NEENAH, WI 54957-0899

UNITED STATES PATENT AND TRADEMARK OFFICE

Commissioner for Patents
United States Patent and Trademark Office
P.O. Box 1450
Alexandria, VA 22313-1450
www.uspto.gov

MODIANO & ASSOCIATI
VIA MERAVIGLI, 16
MILANO 20123 IT ITALY

COPY MAILED

DEC 0 1 2005

OFFICE OF PETITIONS

In re Application of	:	
Massaro, Michele	:	
Application No. 10/155,033	:	ON PETITION
Filed: May 28, 2002	:	
Attorney Docket No. 36083/AJ/mfc	:	

This is a decision on the petition under 37 C.F.R. § 1.137(b), filed November 17, 2005, to revive the above-identified application.

The petition is **GRANTED.**

This matter is being referred to the Publishing Division for processing into a patent.

Telephone inquiries regarding this decision should be directed to the undersigned at (571) 272-3282.

Liana Chase
Petitions Examiner
Office of Petitions

UNITED STATES PATENT AND TRADEMARK OFFICE

COMMISSIONER FOR PATENTS
UNITED STATES PATENT AND TRADEMARK OFFICE
P.O. BOX 1450
ALEXANDRIA, VA 22313-1450
www.uspto.gov

MCGINN INTELLECTUAL PROPERTY LAW GROUP, PLLC
8321 OLD COURTHOUSE ROAD
SUITE 200
VIENNA VA 22182-3817

MAILED
FEB 21 2007
Technology Center 2100

In re Application of:)
Hideki Eda)
Application No. 10/155,076) **DECISION ON PETITION**
Filed: May 28, 2002) **UNDER 37 CFR § 1.181**
For: **SYSTEM, METHOD, SERVER,**)
COMPUTER AND COMPUTER)
PROGRAM FOR ACTIVATING A)
COMPUTER

This is a decision on the petition, filed January 9, 2006, under 37 C.F.R. § 1.181 to invoke Supervisory Authority of the Commissioner and require the Examiner to withdraw the Final rejection mailed November 3, 2005.

The mere filing of a petition does not stay the period for replying to an examiner's action which may be running against an application, nor act as a stay of other proceedings. Because Applicant has not properly replied to the examiner's action mailed 12/02/2005 within the required statutory period, the current application is abandoned.

The petition is therefore **DENIED**.

John Hollansbee
WQAS
Technology Center 2100

UNITED STATES PATENT AND TRADEMARK OFFICE

COMMISSIONER FOR PATENTS
UNITED STATES PATENT AND TRADEMARK OFFICE
P.O. BOX 1450
ALEXANDRIA, VA 22313-1450
www.uspto.gov

DICKSTEIN SHAPIRO MORIN & OSHINSKY LLP
41ST Floor
1177 Avenue of the Americas
New York, NY 10036-2714

COPY MAILED
DEC 0 9 2004
OFFICE OF PETITIONS

In re Application of	:	
Hiroshi Sakai, et al.	:	
Application No. 10/155,089	:	ON PETITION
Filed: May 28, 2002	:	
Atty Docket No. W1878.0180/0US0	:	

This is a decision on the petition, filed December 7, 2004, under 37 CFR 1.313(c)(2) to withdraw the above-identified application from issue after payment of the issue fee.

The petition is **GRANTED**.

The above-identified application is withdrawn from issue for consideration of a submission under 37 CFR 1.114 (request for continued examination). See 37 CFR 1.313(c)(2).

Petitioner is advised that the issue fee paid on October 8, 2004, in the above-identified application cannot be refunded. If, however, the above-identified application is again allowed, petitioner may request that it be applied towards the issue fee required by the new Notice of Allowance. [1]

Telephone inquiries relating to this decision should be directed to the undersigned at (571) 272-3204.

The application is being referred to Technology Center AU 2818 for further processing of the request for continued examination under 37 CFR 1.114 filed December 7, 2004.

Sherry D. Brinkley
Petitions Examiner
Office of Petitions
Office of the Deputy Commissioner
for Patent Examination Policy

[1]The request to apply the issue fee to the new Notice may be satisfied by completing and returning the new Issue Fee Transmittal Form PTOL-85(b), which includes the following language thereon: "Commissioner for Patents is requested to apply the Issue Fee and Publication Fee (if any) or re-apply any previously paid issue fee to the application identified above." Petitioner is advised that, whether a fee is indicated as being due or not, the Issue Fee Transmittal Form **must** be completed and timely submitted to avoid abandonment. Note the language in bold text on the first page of the Notice of Allowance and Fee(s) Due (PTOL-85).

UNITED STATES PATENT AND TRADEMARK OFFICE

UNDER SECRETARY OF COMMERCE FOR INTELLECTUAL PROPERTY AND
DIRECTOR OF THE UNITED STATES PATENT AND TRADEMARK OFFICE
WASHINGTON, DC 20231
www.uspto.gov

MAR 10 2003

MAILED

MAR 10 2003

OFFICE OF THE DIRECTOR
TC 3600

Kenneth J. Hovet
Nordman, Cormany, Hair & Compton
P.O. Box 9100
Oxnard, CA 93031-9100

Paper No. 5

In re application of Joseph R. Mercer Application No. 10/155,160 Filed: May 24, 2002 For: SPORT BOARD FOOT PAD	: : : :	**DECISION ON PETITION TO MAKE SPECIAL (INFRINGEMENT)**

This is a decision on the petition under 37 C.F.R § 1.102(d) filed January 21, 2003 to make the above-identified application special.

The petition requests that the above-identified application be made special under the procedure set forth in M.P.E.P. § 708.02, item II: Infringement.

MPEP 708.02 states that a Petition to Make Special based on Infringement must have the following: (1) the appropriate petition fee under 37 CFR 1.17(i); (2) a statement by the assignee, applicant, or attorney alleging: (A) that there is an infringing device or product actually on the market; (B) that a rigid comparison of the alleged infringing device or product with the claims of the application has been made, and that, in his or her opinion, some of the claims are unquestionably infringed; and (C) that he or she has made a careful and thorough search of the prior art, or has good knowledge of the prior art, and has sent a copy of the references deemed most closely related to the subject matter encompassed by the claims.

The petition filed January 21, 2003 includes all of the requirements above and, therefore, the petition is **GRANTED**.

The examiner is directed (1) to make an interference search for possible interfering applications; (2) to promptly examine this application out of turn; and (3) if any interfering application is discovered, to examine such application simultaneously and state in the first official letter of such application that it is being taken out of turn because of a possible interference.

Petitioner is advised that this application will continue to be special, throughout its entire prosecution and pendency, including interference and appeal, if any, only if petitioner makes a prompt *bona fide* effort, in response to each Office action, to place the application in condition for allowance, even if it is necessary to conduct an interview with the examiner to accomplish this purpose.

Randolph A. Reese
Special Programs Examiner
Technology Center 3600
(703) 308-2121
(703) 605-0586 (facsimile)

RAR/tpl: 2/27/03

UNITED STATES PATENT AND TRADEMARK OFFICE

UNITED STATES DEPARTMENT OF COMMERCE
United States Patent and Trademark Office
Address: COMMISSIONER FOR PATENTS
P.O. Box 1450
Alexandria, Virginia 22313-1450
www.uspto.gov

APPLICATION NO.	FILING DATE	FIRST NAMED INVENTOR	ATTORNEY DOCKET NO.	CONFIRMATION NO.
10/155,185	05/24/2002	Eric L. Burch	100201720-1	1834

7590 01/29/2008
HEWLETT-PACKARD COMPANY
Intellectual Property Administration
P.O. Box 272400
Fort Collins, CO 80527-2400

EXAMINER
SHEWAREGED, BETELHEM

ART UNIT	PAPER NUMBER
1794	

MAIL DATE	DELIVERY MODE
01/29/2008	PAPER

Please find below and/or attached an Office communication concerning this application or proceeding.

The time period for reply, if any, is set in the attached communication.

UNITED STATES PATENT AND TRADEMARK OFFICE

Commissioner for Patents
United States Patent and Trademark Office
P.O. Box 1450
Alexandria, VA 22313-1450
www.uspto.gov

wk

Mailed: 1-29-08

In re application of	:	
Burch et al.	:	DECISION ON
Serial No. 10/155,185	:	PETITION
Filed: May 24, 2002	:	
For: Inkjet Media Coating With Improved Lightfastness, Scratch Resistance, And Image Quality	:	

This is a decision on the PETITION UNDER 37 CFR 1.181 TO WITHDRAW THE FINALITY OF THE OFFICE ACTION mailed November 14, 2007.

On November 14, 2007, a final office action was mailed immediately subsequent to the filing of Applicants' RCE and submission dated August 28, 2007. Applicants' assert that the rejections set forth in the Final Office Action dated November 14, 2007 include a new ground of rejection. Applicant cites MPEP 706.07(h)VIII.

706.07(h)VIII. FIRST ACTION FINAL AFTER FILING AN RCE

The action immediately subsequent to the filing of an RCE with a submission and fee under 37 CFR 1.114 may be made final only if the conditions set forth in MPEP § 706.07(b) are met.

It would not be proper to make final a first Office action immediately after the filing of an RCE if the first Office action includes a new ground of rejection. See MPEP § 1207.03 for a discussion of what may constitute a new ground of rejection.

It should be noted that while the second paragraph of 706(h)VIII states that it would not be proper to make final a first Office action immediately after the filing of an RCE if the first Office action includes a new ground of rejection the first paragraph states that the action may be made final only if the conditions set forth in 706.07(b) are met.

706.07(b) Final Rejection, When Proper on First Action

The claims of a new application may be finally rejected in the first Office action in those situations where (A) the new application is a continuing application of, or a substitute for, an earlier application, and (B) all claims of the new application (1) are drawn to the same invention claimed in the earlier application, and (2) would have been properly finally rejected on the grounds and art of record in the next Office action if they had been entered in the earlier application.

The claims of an application for which a request for continued examination (RCE) has been filed may be finally rejected in the action immediately subsequent to the filing of the RCE (with a submission and fee under 37 CFR 1.114) where all the claims in the application after the entry of the submission under 37 CFR 1.114 (A) are drawn to the same invention claimed in the application prior to the entry of the submission under 37 CFR 1.114,

and (B) would have been properly finally rejected on the grounds and art of record in the next Office action if they had been entered in the application prior to the filing of the RCE under 37 CFR 1.114.

A first Office action in a continuing or substitute application >or an RCE< may not be made final if it contains a new ground of rejection necessitated by the amendments to 35 U.S.C. 102(e) by the Intellectual Property and High Technology Technical Amendments of 2002 (Pub. L. 107-273, 116 Stat. 1758 (2002)).

However, it would not be proper to make final a first Office action in a continuing or substitute application or an RCE where that application contains material which was presented in the earlier application after final rejection or closing of prosecution but was denied entry because (A) new issues were raised that required further consideration and/or search, or (B) the issue of new matter was raised.

Further, it would not be proper to make final a first Office action in a continuation-in-part application where any claim includes subject matter not present in the earlier application.

A final rejection was issued by the examiner on March 28, 2007. Claims 1-11 and 13 were rejected under 35 USC 103(a) over Hirose et al. in view of Brugger et al. Applicants filed a preliminary amendment along with a RCE request on August 28, 2007. A review of this preliminary amendment shows that the claims that were previously rejected were not amended. Applicants further filed a Declaration under 37 CFR 1.132 attempting to address the rejection previously stated by the examiner.

The examiner in response to applicant's filing of the RCE and preliminary amendment issued a Final First Office action dated November 14, 2007. This action rejected claims under 35 USC 102(b) and 35 USC 103(a). The addition of the 35 USC 102(b) rejection was a new ground of rejection. It is not clear from the examiner' action if the new rejection was necessitated by applicant's submission of the declaration filed under 37 CFR 1.132.

DECISION

The petition for withdrawal of finality is **GRANTED.**

The action dated November 14, 2007 will be changed from a final rejection to a non-final rejection. The time for response will continue to run from November 14, 2007.

Jacqueline M. Stone

Jacqueline M. Stone, Director
Technology Center 1700
Chemical and Materials Engineering

Julie Church Dierker
HEWLETT-PACKARD COMPANY
Intellectual Property Administration
P.O. Box 272400
Fort Collins CO 80527-2400

UNITED STATES PATENT AND TRADEMARK OFFICE

UNITED STATES DEPARTMENT OF COMMERCE
United States Patent and Trademark Office
Address: COMMISSIONER FOR PATENTS
P.O. Box 1450
Alexandria, Virginia 22313-1450
www.uspto.gov

IBM CORPORATION
3039 CORNWALLIS RD.
DEPT. T81 / B503, PO BOX 12195
RESEARCH TRIANGLE PARK, NC 27709

Mail Date: 04/20/2010

Applicant	: Andrew James Stanford-Clark	: DECISION ON REQUEST FOR
Patent Number	: 7607007	: RECALCULATION of PATENT
Issue Date	: 10/20/2009	: TERM ADJUSTMENT IN VIEW
Appliction No	: 10/155,193	: OF WYETH AND NOTICE OF INTENT TO
Filed	: 05/24/2002	: ISSUE CERTIFICATE OF CORRECTION
		:

The Request for Recalculation is **GRANTED** to the extent indicated.

The patent term adjustment has been determined to be **2252** days. The USPTO will *sua sponte* issue a certificate of correction reflecting the amount of PTA days determined by the recalculation.

Prior to the issuance of the certificate of correction, the USPTO will afford patentee an opportunity to be heard and request reconsideration. Accordingly, patentee has **one month or thirty (30) days**, whichever is longer, to file a request for reconsideration of this patent term adjustment calculation. See 35 U.S.C. 154(b)(3)(B)(ii) and 37 CFR 1.322(a)(4). No extensions of time will be granted under 37 CFR 1.136.

Patentee should use document code PET.OP if electronically filing a request for reconsideration of this patent term adjustment calculation. The patentee must also include the information required by 37 CFR 1.705(b)(2) and the fee required by 37 CFR 1.18(e). If patentee does not file a timely request for reconsideration of this patent term adjustment calculation including the information required by 37 CFR 1.705(b)(2) and the fee required by 37 CFR 1.18(e), the USPTO will issue a certificate of correction reflecting the PTA determination noted above.

Patentee should be aware that in order to preserve the right to review in the United States District Court for the District of Columbia of the USPTO patent term adjustment determination, patentee must ensure that he or she also take the steps required under 35 U.S.C. 154(b)(4)(A) in a timely manner. Nothing in the request for recalculation should be construed as providing an alternative time frame for commencing a civil action under 35 U.S.C. 154(b)(4)(A).

Any questions concerning this decision should be directed to the Office of Patent Legal Administration at 571-272-7702.

SPE RESPONSE FOR CERTIFICATE OF CORRECTION

DATE : 6/18/08

Paper No.: —

TO SPE OF : ART UNIT 2609

SUBJECT : Request for Certificate of Correction for Appl. No.: 10/155795 Patent No: 7334248 B2

A response is requested with respect to a request for a certificate of correction.

With respect to the change(s) requested to correct Office and/or Applicant's errors, should the patent read as shown in the certificate of correction attached herewith or the COCIN document(s), in IFW images for the above-identified patented application? No new matter should be introduced, nor should the scope or meaning of the claims be changed.

If the response is for an IFW, within 7 days, please complete and forward the response, to the employee (named below) via scanning into application images, using document code **COCX**.

If the response is for a paper file wrapper, please complete the response and forward the response with the paper file wrapper, to the employee (named below), within 7 days, to:

Certificates of Correction Branch (CofC)
South Tower - 9A22
Palm Location 7580

VIRGINIA TOLBERT
Certificates of Correction Branch
703-308-9390 ext. 113

Thank You For Your Assistance

The request for issuing the above-identified correction(s) is hereby:
Note your decision on the appropriate box.

- [x] **Approved** — **All** changes apply.
- [ ] **Approved in Part** — Specify below which changes **do not** apply.
- [ ] **Denied** — State the reasons for denial below.

Comments: _____

JOHN MILLER
SUPERVISORY PATENT EXAMINER
TECHNOLOGY CENTER 2600
SPE

2623
Art Unit

PTOL-306 (REV. 7/03)

U.S. DEPARTMENT OF COMMERCE Patent and Trademark Office

PTO/SB/44 (09-07)
Approved for use through 09/01/2010. OMB 0651-0033
U.S. Patent and Trademark Office; U.S. DEPARTMENT OF COMMERCE
Under the Paperwork Reduction Act of 1995, no persons are required to respond to a collection of information unless it displays a valid OMB control number.
(Also Form PTO-1050)

UNITED STATES PATENT AND TRADEMARK OFFICE
CERTIFICATE OF CORRECTION

Page 1 of 1

PATENT NO. : 7,334,248 B2

APPLICATION NO.: 10/155,195

ISSUE DATE : February 19, 2008

INVENTOR(S) : Michael Scott Deiss, et al.

It is certified that an error appears or errors appear in the above-identified patent and that said Letters Patent is hereby corrected as shown below: On the title page, item [63] and

~~Add to the front page of patent, and the beginning of~~ column 1, ~~the following continuing data information:~~ add the following:

"This is a division of application number 08/759,912, filed December 4, 1996, now patent number 6,671,881 B1, issued December 30, 2003, which is a division of application number 08/232,794, filed on April 22, 1994, now patent number 5,619,501, issued April 8, 1997."

MAILING ADDRESS OF SENDER (Please do not use customer number below):

Paul F. Kiel
Thomson Licensing LLC
Patent Operations
PO Box 5312, Princeton, NJ 08543-5312

Copy

This collection of information is required by 37 CFR 1.322, 1.323, and 1.324. The information is required to obtain or retain a benefit by the public which is to file (and by the USPTO to process) an application. Confidentiality is governed by 35 U.S.C. 122 and 37 CFR 1.14. This collection is estimated to take 1.0 hour to complete, including gathering, preparing, and submitting the completed application form to the USPTO. Time will vary depending upon the individual case. Any comments on the amount of time you require to complete this form and/or suggestions for reducing this burden, should be sent to the Chief Information Officer, U.S. Patent and Trademark Office, U.S. Department of Commerce, P.O. Box 1450, Alexandria, VA 22313-1450. DO NOT SEND FEES OR COMPLETED FORMS TO THIS ADDRESS. SEND TO: Attention Certificate of Corrections Branch, Commissioner for Patents, P.O. Box 1450, Alexandria, VA 22313-1450.

If you need assistance in completing the form, call 1-800-PTO-9199 and select option 2.

UNITED STATES PATENT AND TRADEMARK OFFICE

Commissioner for Patents
United States Patent and Trademark Office
P.O. Box 1450
Alexandria, VA 22313-1450
www.uspto.gov

JOSEPH J. LAKES
THOMSON LICENSING LLC
2 INDEPENDENCE WAY
P.O.BOX 5312
PRINCETON NJ 08543-5312

COPY MAILED

NOV 2 1 2008

OFFICE OF PETITIONS

In re Patent No. 7,334,248
Issue Date: February 19, 2008
Application No. 10/155,195
Filed: May 24, 2002
Attorney Docket No. RCA87,609C

: DECISION GRANTING PETITION
: UNDER 37 CFR 1.78(a)(3) AND
: REQUEST FOR CERTIFICATE OF
: CORRECTION
:

This is a decision on the petition, filed April 15, 2008, which is being treated as a petition under 37 CFR 1.78(a)(3), seeking to add a claim for priority under 35 U.S.C. § 120 to nonprovisional Application No. 08/759,812, filed December 4, 1996, and to Application No. 08/232,794, filed April 22, 1994, by way of a certificate of correction.

The petition is **GRANTED**.

A review of the file record fails to disclose that a claim for the benefit of priority to the above-noted, prior-filed nonprovisional application was made within the time period set forth in 37 CFR 1.78(a)(2)(ii) and further failed to include a proper reference to the prior-filed application as required by 37 CFR 1.78(a)(2)(i) and 1.78(a)(2)(iii).

The instant application was filed May 24, 2002. Therefore, since this application was filed after November 29, 2000, a petition under 37 CFR 1.78(a)(3) accompanied by a request for a Certificate of Correction, is the appropriate avenue of relief to accept a late claim for the benefit of priority to a prior-filed nonprovisional application after issuance of the application into a patent. *See* MPEP § 1481.

As set forth in MPEP § 1481.03 II B, under certain conditions as specified below, a Certificate of Correction can be used, with respect to 35 U.S.C. 120 priority, to correct:
(A) the failure to make reference to a prior copending application pursuant to 37 CFR 1.78(a)(2); or
(B) an incorrect reference to a prior copending application pursuant to 37 CFR 1.78(a)(2).

Where priority is based upon 35 U.S.C. 120 to a national application, the following conditions must be satisfied:

(1) all requirements set forth in 37 CFR 1.78(a)(1) must have been met in the application which became the patent to be corrected;

(2) it must be clear from the record of the patent and the parent application(s) that priority is appropriate (see MPEP § 201.11); and

(3) a grantable petition to accept an unintentionally delayed claim for the benefit of a prior application must be filed, including a surcharge as set forth in 37 CFR 1.17(t), as required by 37 CFR 1.78(a)(3).

As the petition for acceptance of an unintentionally delayed claim for the benefit of priority under 35 U.S.C. § 120 to the above-noted, prior-filed nonprovisional applications satisfies the conditions (1) – (3), the petition is granted. It is noted that the certificate of correction mailed on September 16, 2008 is in accordance with this decision.

A corrected Filing Receipt, which includes the priority claim to the above-noted, prior-filed nonprovisional application, accompanies this decision on petition.

As authorized, the $1,410 surcharge fee, as well as the $100 certificate of correction fee, will be charged to petitioner's Deposit Account No. 07- 0832.

Any inquiries concerning this decision may be directed to Ramesh Krishnamurthy at (571) 272-4914.

David Bucci
Petitions Examiner
Office of Petitions

ATTACHMENT: Corrected Filing Receipt

UNITED STATES PATENT AND TRADEMARK OFFICE

UNITED STATES DEPARTMENT OF COMMERCE
United States Patent and Trademark Office
Address: COMMISSIONER FOR PATENTS
P.O. Box 1450
Alexandria, Virginia 22313-1450
www.uspto.gov

APPLICATION NUMBER	FILING or 371(c) DATE	GRP ART UNIT	FIL FEE REC'D	ATTY.DOCKET.NO	TOT CLAIMS	IND CLAIMS
10/155,195	05/24/2002	2623	1170	RCA87,609C	2	2

CONFIRMATION NO. 1340

CORRECTED FILING RECEIPT

JOSEPH J. LAKES
THOMSON LICENSING LLC
2 INDEPENDENCE WAY
P.O.BOX 5312
PRINCETON, NJ 08543-5312

OC000000033234753

Date Mailed: 11/21/2008

Receipt is acknowledged of this non-provisional patent application. The application will be taken up for examination in due course. Applicant will be notified as to the results of the examination. Any correspondence concerning the application must include the following identification information: the U.S. APPLICATION NUMBER, FILING DATE, NAME OF APPLICANT, and TITLE OF INVENTION. Fees transmitted by check or draft are subject to collection. Please verify the accuracy of the data presented on this receipt. **If an error is noted on this Filing Receipt, please submit a written request for a Filing Receipt Correction. Please provide a copy of this Filing Receipt with the changes noted thereon. If you received a "Notice to File Missing Parts" for this application, please submit any corrections to this Filing Receipt with your reply to the Notice. When the USPTO processes the reply to the Notice, the USPTO will generate another Filing Receipt incorporating the requested corrections**

Applicant(s)

Michael S. Deiss, Zionsville, IN;
Gregory G. Tamer, Indianapolis, IN;
John W. Chaney, Gilroy, CA;
James E. Hailey, Indianapolis, IN;

Power of Attorney:
Joseph Tripoli--26040
Robert Shedd--36269
Paul Kiel--40677

Domestic Priority data as claimed by applicant

This application is a DIV of 08/759,912 12/04/1996 PAT 6,671,881
which is a DIV of 08/232,794 04/22/1994 PAT 5,619,501

Foreign Applications

If Required, Foreign Filing License Granted: 06/06/2002

The country code and number of your priority application, to be used for filing abroad under the Paris Convention, is **US 10/155,195**

Projected Publication Date: Not Applicable

Non-Publication Request: No

Early Publication Request: No

Title

CONDITIONAL ACCESS FILTER AS FOR A PACKET VIDEO SIGNAL INVERSE TRANSPORT SYSTEM

Preliminary Class

725

PROTECTING YOUR INVENTION OUTSIDE THE UNITED STATES

Since the rights granted by a U.S. patent extend only throughout the territory of the United States and have no effect in a foreign country, an inventor who wishes patent protection in another country must apply for a patent in a specific country or in regional patent offices. Applicants may wish to consider the filing of an international application under the Patent Cooperation Treaty (PCT). An international (PCT) application generally has the same effect as a regular national patent application in each PCT-member country. The PCT process **simplifies** the filing of patent applications on the same invention in member countries, but **does not result** in a grant of "an international patent" and does not eliminate the need of applicants to file additional documents and fees in countries where patent protection is desired.

Almost every country has its own patent law, and a person desiring a patent in a particular country must make an application for patent in that country in accordance with its particular laws. Since the laws of many countries differ in various respects from the patent law of the United States, applicants are advised to seek guidance from specific foreign countries to ensure that patent rights are not lost prematurely.

Applicants also are advised that in the case of inventions made in the United States, the Director of the USPTO must issue a license before applicants can apply for a patent in a foreign country. The filing of a U.S. patent application serves as a request for a foreign filing license. The application's filing receipt contains further information and guidance as to the status of applicant's license for foreign filing.

Applicants may wish to consult the USPTO booklet, "General Information Concerning Patents" (specifically, the section entitled "Treaties and Foreign Patents") for more information on timeframes and deadlines for filing foreign patent applications. The guide is available either by contacting the USPTO Contact Center at 800-786-9199, or it can be viewed on the USPTO website at http://www.uspto.gov/web/offices/pac/doc/general/index.html.

For information on preventing theft of your intellectual property (patents, trademarks and copyrights), you may wish to consult the U.S. Government website, http://www.stopfakes.gov. Part of a Department of Commerce initiative, this website includes self-help "toolkits" giving innovators guidance on how to protect intellectual property in specific countries such as China, Korea and Mexico. For questions regarding patent enforcement issues, applicants may call the U.S. Government hotline at 1-866-999-HALT (1-866-999-4158).

LICENSE FOR FOREIGN FILING UNDER

Title 35, United States Code, Section 184

Title 37, Code of Federal Regulations, 5.11 & 5.15

GRANTED

The applicant has been granted a license under 35 U.S.C. 184, if the phrase "IF REQUIRED, FOREIGN FILING LICENSE GRANTED" followed by a date appears on this form. Such licenses are issued in all applications where

the conditions for issuance of a license have been met, regardless of whether or not a license may be required as set forth in 37 CFR 5.15. The scope and limitations of this license are set forth in 37 CFR 5.15(a) unless an earlier license has been issued under 37 CFR 5.15(b). The license is subject to revocation upon written notification. The date indicated is the effective date of the license, unless an earlier license of similar scope has been granted under 37 CFR 5.13 or 5.14.

This license is to be retained by the licensee and may be used at any time on or after the effective date thereof unless it is revoked. This license is automatically transferred to any related applications(s) filed under 37 CFR 1.53(d). This license is not retroactive.

The grant of a license does not in any way lessen the responsibility of a licensee for the security of the subject matter as imposed by any Government contract or the provisions of existing laws relating to espionage and the national security or the export of technical data. Licensees should apprise themselves of current regulations especially with respect to certain countries, of other agencies, particularly the Office of Defense Trade Controls, Department of State (with respect to Arms, Munitions and Implements of War (22 CFR 121-128)); the Bureau of Industry and Security, Department of Commerce (15 CFR parts 730-774); the Office of Foreign AssetsControl, Department of Treasury (31 CFR Parts 500+) and the Department of Energy.

NOT GRANTED

No license under 35 U.S.C. 184 has been granted at this time, if the phrase "IF REQUIRED, FOREIGN FILING LICENSE GRANTED" DOES NOT appear on this form. Applicant may still petition for a license under 37 CFR 5.12, if a license is desired before the expiration of 6 months from the filing date of the application. If 6 months has lapsed from the filing date of this application and the licensee has not received any indication of a secrecy order under 35 U.S.C. 181, the licensee may foreign file the application pursuant to 37 CFR 5.15(b).

Customer Number 24498

PTO/SB/97 (09-04)
Approved for use through 03/31/2007. OMB 0651-0031
U.S. Patent and Trademark Office: U.S. DEPARTMENT OF COMMERCE
Under the Paperwork Reduction Act of 1995, no persons are required to respond to a collection of information unless it contains a valid OMB control number.

Certificate of Transmission under 37 CFR 1.8

RECEIVED
CENTRAL FAX CENTER
APR 15 2008

I hereby certify that this correspondence is being facsimile transmitted to the Patent and Trademark Office @ 571-273-8300

on 4/15/08.
Date

Signature

PAUL P. KIEL
Typed or printed name of person signing Certificate

40,677
Registration Number if applicable

1 609 734 6815
Telephone Number

Note: Each paper must have its own certificate of transmission, or this certificate must identify each submitted paper.

Serial No.: 10/155,195
Docket No.: RCA87609B Div. 1 US
Art Unit: 2609
Examiner: Amit K. Ray
MS: Office of Patent Publication – Att: Certificate of Correction Branch
Attachments:
Petition to accept an unintentionally delayed claim of benefit to a prior app. – **3 pgs**
Req. for Certificate of Correction – **4 pgs**
Fee Transmittal Sheet – **1 pg**
Exhibits 1 to 7 – **14 pgs** Total pgs (incl. Cert. of Trans.) = **23 pgs**

This collection of information is required by 37 CFR 1.8. The information is required to obtain or retain a benefit by the public which is to file (and by the USPTO to process) an application. Confidentiality is governed by 35 U.S.C. 122 and 37 CFR 1.11 and 1.14. This collection is estimated to take 1.8 minutes to complete, including gathering, preparing, and submitting the completed application form to the USPTO. Time will vary depending upon the individual case. Any comments on the amount of time you require to complete this form and/or suggestions for reducing this burden, should be sent to the Chief Information Officer, U.S. Patent and Trademark Office, U.S. Department of Commerce, P.O. Box 1450, Alexandria, VA 22313-1450. DO NOT SEND FEES OR COMPLETED FORMS TO THIS ADDRESS. SEND TO: Commissioner for Patents, P.O. Box 1450, Alexandria, VA 22313-1450.

If you need assistance in completing the form, call 1-800-PTO-9199 and select option 2.

CUSTOMER NO.: 24498
Attorney Docket Number: RCA 87,609B, Div. 1

RECEIVED
CENTRAL FAX CENTER
APR 1 5 2008

IN THE UNITED STATES PATENT AND TRADEMARK OFFICE

Applicants: Michael Scott Deiss et al.

Patent No.: 7,334,348

Ser. No.: 10/155,195

Filed: May 24, 2002

For: CONDITIONAL ACCESS FILTER AS FOR A PACKET VIDEO SIGNAL INVERSE TRANSPORT SYSTEM

Examiner: Amit K. Ray

Art Unit: 2609

PETITION TO ACCEPT AN UNINTENTIONALLY DELAYED CLAIM OF BENEFIT TO A PRIOR APPLICATION

Commissioner for Patents
Office of Patent Publication
ATTENTION: CERTIFICATE OF CORRECTION BRANCH
P.O. Box 1450
Alexandria, Virginia, 22313-1450

Sir:

In accordance with 37 CFR 1.78 (a)(3), Applicants hereby petition for the acceptance of an unintentionally delayed claim under 35 USC 120 for the benefit of a prior filed application, and state that the entire delay between the date for filing the claim under 37 CFR 1.78 and the date of this Petition was unintentional.

A certificate of correction pursuant to MPEP 1481.03 is attached to correct the failure to make reference to a prior co-pending application pursuant to 37 CFR 1.78(a)(2).

The present application is a division of application number 08/759,912, filed December 4, 1996, now patent number 6,671,881B1, issued December 30, 2003, which is a division of application number 08/232,794, filed on April 22, 1994, now patent number 5,619,501, issued April 8, 1997.

In support of the Petition, applicants submit the following exhibits showing that the claim of priority is appropriate:

04/16/2008 PCHOMP 00000015 070832 10155195
01 FC:1454 1410.00 DA

RECEIVED
CENTRAL FAX CENTER
APR 1 5 2008

1. Application Transmittal form indicating the request for claim of benefit to application serial number 08/759,912;
2. Declaration and Powers of Attorney claiming the benefit to application serial numbers 08/759,912 and 08/232,794;
3. A filing receipt dated June 6, 2002, acknowledging the domestic claim of priority to application 08/759,912;
4. A updated filing receipt dated September 24, 2002, acknowledging the domestic claim of priority to application 08/759,912, which is indicated to be abandoned;
5. Notice of Abandonment for application 08/759,912;
6. Applicants' Petition for Withdrawal of Holding of Abandonment of application 08/759,912;
7. Notice of Grant of Petition for Withdrawal of Holding of Abandonment of application 08/759,912.

Regarding items 4-7 above, applicants note that application 08/759,912 was incorrectly deemed abandoned by the USPTO by a Notice of Abandonment mailed June 28, 2002 (exhibit 5), for alleged failure to file a response to an Office Action dated November 26, 2001. In fact, Applicant timely filed a response on January 9, 2002, and subsequently filed a Petition for Withdrawal of Holding of Abandonment on August 1, 2002 (exhibit 6). The USPTO acknowledged that Applicant timely filed a response and granted the Petition on April 30, 2003 (exhibit 7). Thus, applicants submit that application 08/759,912 was incorrectly held to be abandoned, and in fact, was pending at the filing of the application for this patent, and the present patent is entitled to the benefit of the filing date of application 08/759,912.

Also, the named inventors in the present patent are the same as those named in the prior application 08/759,912, and the later filed application discloses the invention claimed in the later filed application in the manner provided by the first paragraph of 35 USC 112 as there were no rejections in this regard during the prosecution and the specification was amended to overcome only formality

RECEIVED
CENTRAL FAX CENTER
APR 1 5 2008

objections. Additionally, the prior filed application 08/759,912, now patent number 6,671,881 is entitled to a filing date as set forth in CFR 1.53(b) and the basic filing fee set forth in 37 CFR 1.16 was paid within the pendency of the application.

Please charge the fee of $1,410.00 for this Petition as required under 37 CFR 1.17 (t), and any other fees due in connection with this Petition to Deposit Account 07-0832.

Respectfully submitted,
MICHAEL SCOTT DEISS ET AL.

By: _____
Paul P. Kiel, Attorney for Applicants
Registration No. 40,677

Patent Operations
Thomson Licensing LLC
P.O. Box 5312
Princeton, NJ 08543-5312

Date: 4/15/08

UNITED STATES PATENT AND TRADEMARK OFFICE

CERTIFICATE OF CORRECTION

PATENT NO. : 7,334,248 B2
APPLICATION NO. : 10/155195
DATED : February 19, 2008
INVENTOR(S) : Michael Scott Deiss et al.

It is certified that error appears in the above-identified patent and that said Letters Patent is hereby corrected as shown below:

On the Title page item [63] and add the following:

--This is a division of application number 08/759,912, filed December 4, 1996, now patent number 6,671,881 B1, issued December 30, 2003, which is a division of application number 08/232,794, filed on April 22, 1994, now patent number 5,619,501, issued April 8, 1997.--

Signed and Sealed this

Sixteenth Day of September, 2008

Jon W. Dudas

JON W. DUDAS
Director of the United States Patent and Trademark Office

CUSTOMER NO.: 24498
Attorney Docket Number: RCA 87,609B, Div. 1

RECEIVED
CENTRAL FAX CENTER
APR 15 2008

IN THE UNITED STATES PATENT AND TRADEMARK OFFICE

Applicants: Michael Scott Deiss et al.

Patent No.: 7,334,348

Ser. No.: 10/155,195

Filed: May 24, 2002

For: CONDITIONAL ACCESS FILTER AS FOR A PACKET VIDEO SIGNAL INVERSE TRANSPORT SYSTEM

Examiner: Amit K. Ray

Art Unit: 2609

REQUEST FOR CERTIFICATE OF CORRECTION

Commissioner for Patents
Office of Patent Publication
ATTENTION: CERTIFICATE OF CORRECTION BRANCH
P.O. Box 1450
Alexandria, Virginia, 22313-1450

Sir:

In accordance with MPEP section 1481.03, Applicants hereby request a Certificate of Correction to correct the failure to make reference to a prior co-pending application in the specification pursuant to 37 CFR 1.78(a)(2). The present application is a divisional of application number 08/759,912, filed on December 4, 1996, now patent number US 6,671,881B1, issued December 30, 2003, which is a division of application no. 08/232,794, filed on April 22, 1994, now patent number 5,619,501, issued April 8, 1997.

Applicants submit that a Certificate of Correction is proper for making this correction, as specified by MPEP section 1481.03, and submit that for the reasons discussed below all the requirements for the Certificate are met.

According to MPEP section 1481.03 (II)(A), the following conditions must be satisfied for the Certificate of Correction:

(A) all requirements set forth in 37 CFR 1.78(a)(1) must have been met in the application which became the patent to be corrected;

(B) it must be clear from the record of the patent and the parent application(s) that priority is appropriate (see MPEP 201.11); and

(C) a grantable petition to accept an unintentionally delayed claim for the benefit of a prior application must be filed, including a surcharge as set forth in 37 CFR 1.17(t), as required by 37 CFR 1.78 (a)(3).

Regarding requirement (A), applicants submit that all requirements set forth in 37 CFR number 1.78 (a)(1) have been met. The named inventors in the present patent are the same as those named in the prior application 08/759,912, and the later filed application discloses the invention claimed in the later filed application in the manner provided by the first paragraph of 35 USC 112 as there were no rejections in this regard during the prosecution and the specification was amended to overcome only formality objections. Additionally, the prior filed application 08/759,912, now patent number 6,671,881 is entitled to a filing date as set forth in CFR 1.53(b) and the basic filing fee set forth in 37 CFR 1.16 was paid within the pendency of the application.

Regarding requirement (B), applicants have attached as exhibits the following copies of documents that are of record in the application, and application 08/759,912, which show that the claim of priority is appropriate:

1. Application Transmittal form indicating the request for claim of benefit to application serial number 08/759,912;
2. Declaration and Powers of Attorney claiming the benefit to application serial numbers 08/759,912 and 08/232,794;
3. A filing receipt dated June 6, 2002, acknowledging the domestic claim of priority to application 08/759,912;
4. A updated filing receipt dated September 24, 2002, acknowledging the domestic claim of priority to application 08/759,912, which is indicated to be abandoned;

5. Notice of Abandonment for application 08/759,912;
6. Applicants' Petition for Withdrawal of Holding of Abandonment of application 08/759,912;
7. Notice of Grant of Petition for Withdrawal of Holding of Abandonment of application 08/759,912.

Regarding items 4-7 above, applicants note that application 08/759,912 was incorrectly deemed abandonod by the USPTO by a Notice of Abandonment mailed June 28, 2002 (exhibit 5), for alleged failure to file a response to an Office Action dated November 26, 2001. In fact, Applicant timely filed a response on January 9, 2002, and subsequently filed a Petition for Withdrawal of Holding of Abandonment on August 1, 2002 (exhibit 6). The USPTO acknowledged that Applicant timely filed a response and granted the Petition on April 30, 2003 (exhibit 7). Thus, applicants submit that application 08/759,912 was incorrectly held to be abandoned, and in fact, was pending at the time of filing of the application for this patent, and the present patent is entitled to the benefit of the filing date of application 08/759,912.

Finally, regarding requirement (C), a grantable petition to accept an unintentionally delayed claim for the benefit of a prior application, including a surcharge as set forth in 37 CFR 1.17 (t), as required by 37 CFR 1.78 (a)(3) is attached herewith.

PAGE 7/23 * RCVD AT 4/15/2008 3:57:23 PM [Eastern Daylight Time] * SVR:USPTO-EFXRF-4/13 * DNIS:2738300 * CSID:609 734 6888 * DURATION (mm-ss):14-58

RECEIVED
CENTRAL FAX CENTER
APR 1 5 2008

CUSTOMER NO.: 24498
Attorney Docket Number: RCA 87,609B, Div. 1

In view of the above, applicants submit that all the requirements required by MPEP 1481.03 are met and request that a certificate be issued to correct the first paragraph of the specification to read "This application is a division of application No. 08/759,912, filed December 4, 1996, now Pat. No. 6,671,881B1, which is a division of application No. 08,232,794, filed on April 22, 1994, now Pat. No. 5,619,501." No further dues are believed to be due with respect to this request, however if further fees are due please charge the necessary fees to deposit account 07-0832.

Respectfully submitted,
MICHAEL SCOTT DEISS ET AL.

By: _____
Paul P. Kiel, Attorney for Applicants
Registration No. 40,677

Patent Operations
Thomson Licensing LLC
P.O. Box 5312
Princeton, NJ 08543-5312

Date: 4/15/08

US007334248B2

(12) **United States Patent**
Deiss et al.

(10) **Patent No.: US 7,334,248 B2**
(45) **Date of Patent: Feb. 19, 2008**

(54) **CONDITIONAL ACCESS FILTER AS FOR A PACKET VIDEO SIGNAL INVERSE TRANSPORT SYSTEM**

(75) Inventors: **Michael S. Deiss**, Zionsville, IN (US); **Gregory G. Tamer**, Indianapolis, IN (US); **John W. Chaney**, Indianapolis, IN (US); **James E. Hailey**, Indianapolis, IN (US)

(73) Assignee: **Thomson Licensing**, Boulogne Billancourt (FR)

(*) Notice: Subject to any disclaimer, the term of this patent is extended or adjusted under 35 U.S.C. 154(b) by 1394 days.

(21) Appl. No.: **10/155,195**

(22) Filed: **May 24, 2002**

(65) **Prior Publication Data**

US 2003/0005434 A1 Jan. 2, 2003

(51) **Int. Cl.**
H04N 7/16 (2006.01)
H04N 7/167 (2006.01)

(52) **U.S. Cl.** **725/25**; 725/31; 725/27; 725/28; 725/131; 725/139

(58) **Field of Classification Search** 725/25, 725/31, 27, 28, 131, 139, 151; 370/252, 370/474, 475; 380/200, 201, 202, 203
See application file for complete search history.

(56) **References Cited**

U.S. PATENT DOCUMENTS

3,970,989	A	7/1976	Ophir et al.	340/146.1
4,371,963	A	2/1983	Edwards, Jr. et al.	371/50
4,439,859	A	3/1984	Donnan	371/32
4,547,804	A	10/1985	Greenberg	358/142
4,637,023	A	1/1987	Lounsbury et al.	371/38
4,670,881	A	6/1987	Imoto	371/38
5,285,497	A	2/1994	Thatcher, Jr.	380/49
5,289,276	A	2/1994	Siracusa et al.	348/467
5,319,453	A	6/1994	Copriviza et al.	348/6
5,333,135	A	7/1994	Wendorf	370/94.1
5,365,272	A	11/1994	Siracusa	348/426
5,381,181	A	1/1995	Deiss	348/423
5,475,688	A *	12/1995	Bridgewater et al.	370/394
5,521,979	A *	5/1996	Deiss	380/212
5,619,501	A *	4/1997	Tamer et al.	370/392
5,802,063	A *	9/1998	Deiss	370/476
5,838,873	A *	11/1998	Blatter et al.	386/95
5,878,135	A *	3/1999	Blatter et al.	380/239
5,959,659	A *	9/1999	Dokic	725/152
6,021,440	A *	2/2000	Post et al.	709/231
6,211,800	B1 *	4/2001	Yanagihara et al.	341/50
6,229,801	B1 *	5/2001	Anderson et al.	370/349

(Continued)

Primary Examiner—Vu Le
Assistant Examiner—Amit Ray
(74) *Attorney, Agent, or Firm*—Joseph J. Laks; Paul P. Kiel

(57) **ABSTRACT**

A method and an apparatus for processing a packetized transport stream that determines whether a sequence of transport packets are received in a proper sequence and whether an error is present in a particular transport packet. The method includes the steps of determining a packet identifier for identifying transport packets associated with a selected program and parsing a packetized transport stream to identify and capture the desired sequence of transport packets in response to the packet identifier. The method further includes the steps of detecting a counter portion, determining whether a desired sequence of transport packets has been received in response to the counter portion, detecting a one bit toggle portion, and determining whether an error exits in the associated transport packet in response to the one bit toggle portion. An apparatus for implementing the method is also disclosed.

2 Claims, 7 Drawing Sheets

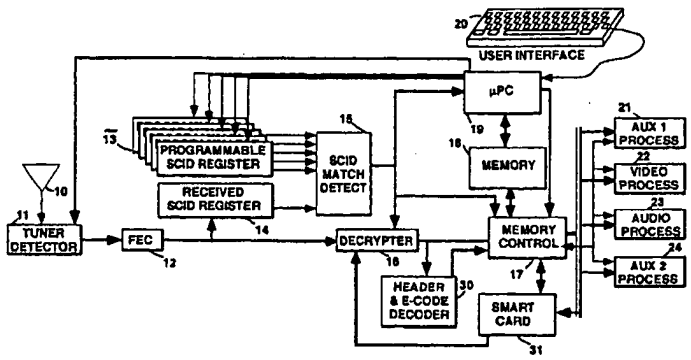

UNITED STATES PATENT AND TRADEMARK OFFICE

Commissioner for Patents
United States Patent and Trademark Office
P.O. Box 1450
Alexandria, VA 22313-1450
www.uspto.gov

EITAN, PEARL, LATZER & COHEN ZEDEK
10 ROCKEFELLER PLAZA, SUITE 1001
NEW YORK NY 10020

COPY MAILED

SEP 22 2004

OFFICE OF PETITIONS

In re Application of
Eduardo Maayan et al
Application No. 10/155,215
Filed: May 28, 2002
Attorney Docket No. P-3364-US1

: DECISION ON PETITION
: UNDER 37 CFR 1.78(a)(3)

This is a decision on the petition under 37 CFR 1.78(a)(3), filed June 1, 2004, to accept an unintentionally delayed claim under 35 U.S.C. § 120 for the benefit of priority to the prior-filed nonprovisional applications set forth in the amendment filed concurrently with the instant petition.

The petition is **DISMISSED**.

A petition for acceptance of a claim for late priority under 37 CFR 1.78(a)(3) is only applicable to those applications filed on or after November 29, 2000. Further, the petition is appropriate only after the expiration of the period specified in 37 CFR 1.78(a)(2)(ii). In addition, the petition under 37 CFR 1.78(a)(3) must be accompanied by:

(1) the reference required by 35 U.S.C. § 120 and 37 CFR 1.78(a)(2)(i) of the prior-filed application(s), unless previously submitted;
(2) the surcharge set forth in § 1.17(t); and
(3) a statement that the entire delay between the date the claim was due under 37 CFR 1.78(a)(2)(ii) and the date the claim was filed was unintentional. The Commissioner may require additional information where there is a question whether the delay was unintentional.

The instant petition does not comply with item (1) above.

A reference to add the above-noted, prior-filed applications on page one following the first sentence of the specification has been included in a concurrently filed amendment. However, the amendment is not acceptable as drafted since it improperly incorporates by reference the prior-

filed applications Petitioner's attention is directed to Dart Industries v. Banner, 636 F.2d 684, 207 USPQ 273 (C.A.D.C. 1980), where the court drew a distinction between a permissible 35 U.S.C. § 120 statement and the impermissible introduction of new matter by way of incorporation by reference in a 35 U.S.C. § 120 statement. The court specifically stated:

> Section 120 merely provides a mechanism whereby an application becomes entitled to benefit of the filing date of an earlier application disclosing the same subject matter. Common subject matter must be disclosed, in both applications, either specifically or by an express incorporation-by-reference of prior disclosed subject matter. Nothing in section 120 itself operates to carry forward any disclosure from an earlier application. In re deSeversky, supra at 674, 177 USPQ at 146-147. Section 120 contains no magical disclosure-augmenting powers able to pierce new matter barriers. It cannot, therefore, "limit" the absolute and express prohibition against new matter contained in section 251.

In order for the incorporation by reference statement to be effective as a proper safeguard against the omission of a portion of a prior application, the incorporation by reference statement must be included in the specification-as-filed, or in an amendment specifically referred to in an oath or declaration executing the application. *See* In re deSeversky, *supra*. *Note also* MPEP 201.06(c).

Accordingly, before the petition under 37 CFR 1.78(a)(3) can be granted, a substitute amendment[1] deleting the incorporation by reference statement for Application Nos. 10/122,078 and 08/905,286, along with a renewed petition under 37 CFR 1.78(a)(3), is required.

Further correspondence with respect to this matter should be addressed as follows:

By mail: Mail Stop PETITIONS
Commissioner for Patents
Post Office Box 1450
Alexandria, VA 22313-1450

---

[1] *Note* 37 CFR 1.121

By hand: Customer Window located at:
U.S. Patent and Trademark Office
220 20th Street S
Customer Window, Mail Stop Petitions
Crystal Plaza Two Lobby, Room 1B03
Arlington, VA 22202

By fax: (703) 872-9306
ATTN: Office of Petitions

Any questions concerning this matter may be directed to the undersigned at (703) 305-8859.[2]

Karen Creasy

Karen Creasy
Petitions Examiner
Office of Petitions
Office of the Deputy Commissioner
for Patent Examination Policy

[2] Effective September 27, 2004, the phone number will be 571-272-3208.

UNITED STATES PATENT AND TRADEMARK OFFICE

Commissioner for Patents
United States Patent and Trademark Office
P.O. Box 1450
Alexandria, VA 22313-1450
www.uspto.gov

EITAN, PEARL,LATZER & COHEN ZEDEK
10 ROCKEFELLER PLAZA, SUITE 1001
NEW YORK, NY 10020

COPY MAILED

DEC 0 7 2004

OFFICE OF PETITIONS

In re Application of :
Eduardo Maayan et al :
Application No. 10/155,215 : DECISION ON PETITION
Filed: May 28, 2002 : UNDER 37 CFR 1.78(a)(3)
Attorney Docket No. P-3364-US1 :

This is a decision on the renewed petition under 37 CFR 1.78(a)(3), filed October 18, 2004, to accept an unintentionally delayed claim under 35 U.S.C. § 120 for the benefit of priority to the prior-filed nonprovisional applications set forth in the amendment filed concurrently with the instant petition.

The petition is **GRANTED**.

A petition for acceptance of a claim for late priority under 37 CFR 1.78(a)(3) is only applicable to those applications filed on or after November 29, 2000. Further, the petition is appropriate only after the expiration of the period specified in 37 CFR 1.78(a)(2)(ii). In addition, the petition under 37 CFR 1.78(a)(3) must be accompanied by:

> **(1)** the reference required by 35 U.S.C. § 120 and 37 CFR 1.78(a)(2)(i) of the prior-filed application, unless previously submitted;[1]
> **(2)** the surcharge set forth in § 1.17(t); and
> **(3)** a statement that the entire delay between the date the claim was due under 37 CFR 1.78(a)(2)(ii) and the date the claim was filed was unintentional. The Commissioner may require additional information where there is a question whether the delay was unintentional.

---

[1] Any nonprovisional application or international application designating the United States of America claiming the benefit of one or more prior-filed copending applications or international applications designating the United States of America must contain or be amended to contain a reference (amendment to the first line of the specification following the title or in an application data sheet (ADS) to each such prior-filed application, identifying it by application number (consisting of the series code and serial number) or international application number and international filing date filing date and indicating the relationship of the applications. Cross references to other related applications may be made when appropriate (*see* § 1.14).

The instant pending application was filed on May 28, 2002, and was pending at the time of filing of the instant petition. A reference to the prior-filed nonprovisional applications has been included in an amendment to the first sentence of the specification following the title, as required by 37 CFR 1.78(a)(2)(iii).

The instant nonprovisional application was filed after November 29, 2000, and the claim herein for the benefit of priority to the prior-filed nonprovisional applications is submitted after expiration of the period specified in 37 CFR 1.78(a)(2)(ii). Also, the reference to the prior-filed nonprovisional applications was submitted during the pendency of the instant nonprovisional application, for which the claim for benefit of priority is sought. *See* 35 U.S.C. § 120. Accordingly, having found that the instant petition for acceptance of an unintentionally delayed claim for the benefit of priority under 35 U.S.C. § 120 to the prior-filed nonprovisional applications satisfies the conditions of 37 CFR 1.78(a)(3), the petition is granted.

The granting of the petition to accept the delayed benefit claim to the prior-filed applications under 37 CFR 1.78(a)(3) should not be construed as meaning that the instant application is entitled to the benefit of the prior-filed applications. In order for the instant application to be entitled to the benefit of the prior-filed applications, all other requirements under 35 U.S.C. § 120 and 37 CFR 1.78(a)(1) and (a)(2) must be met. Similarly, the fact that the corrected Filing Receipt accompanying this decision on petition includes the prior-filed applications should not be construed as meaning that applicant is entitled to the claim for benefit of priority to the prior-filed applications noted thereon. Accordingly, the examiner will, in due course, consider this benefit claim and determine whether the instant application is entitled to the benefit of the earlier filing date.

A corrected Filing Receipt, which includes the priority claim to the prior-filed nonprovisional applications, accompanies this decision on petition.

Any inquiries concerning this decision may be directed to Karen Creasy at (571) 272-3208.

The examiner of Technology Center Art Unit 2818 will consider applicant's entitlement to claim benefit of priority under 35 U.S.C. § 120 to the prior-filed nonprovisional applications.

Karen Creasy

Karen Creasy
Petitions Examiner
Office of Petitions
Office of the Deputy Commissioner
for Patent Examination Policy

ATTACHMENT: Corrected Filing Receipt

UNITED STATES PATENT AND TRADEMARK OFFICE

Commissioner for Patents
United States Patent and Trademark Office
P.O. Box 1450
Alexandria, VA 22313-1450
www.uspto.gov

Eitan Law Group
C/O LandonIP, Inc.
Suite 450
1700 Diagonal Road
Alexandria, VA 22314

COPY MAILED

SEP 28 2007

OFFICE OF PETITIONS

In re Application of :
Maayan, et al. :
Application No.: 10/155,215 : ON PETITION
Filed: May 28, 2002 :
Attorney Docket No: P-3364-US1 :

This is in response to the petition under 37 CFR 1.137(b) filed January 7, 2007.

The petition is DISMISSED.

Any request for reconsideration of this decision must be submitted within TWO (2) MONTHS from the mail date of this decision. Extensions of time under 37 CFR 1.136(a) are permitted. The reconsideration request should include a cover letter entitled "Renewed Petition" under 37 CFR 1.137(b)."

This application became abandoned for failure file an appeal brief after the filing of the Notice of Appeal on August 23, 2005. The Notice of Abandonment was mailed April 17, 2006.

Effective December 1, 1997, the provisions of 37 CFR 1.137(b) now provide that where the delay in reply was unintentional, a petition may be filed to revive an abandoned application or a lapsed patent pursuant to 37 CFR 1.137(b). A grantable petition pursuant to 37 CFR 1.137(b) must be accompanied by:

(1) the required reply, unless previously filed. In a non-provisional application abandoned for failure to prosecute, the required reply may be met by the filing of a continuing application. In an application or patent, abandoned or lapsed for failure to pay the issue fee, or any portion thereof, the required reply must be the payment of the issue fee or any outstanding balance thereof.

(2) the petition fee as set forth in 37 CFR 1.17(m);

(3) a statement that the entire delay in filing the required reply from the due date for the reply until the filing of a grantable petition pursuant to 37 CFR 1.137(b) was unintentional. The Commissioner may require additional information where there is a question whether the delay was unintentional; and

(4) any terminal disclaimer (and fee set forth in 37 CFR 1.20(d)) required pursuant to 37 CFR 1.137(c).

The instant petition does not satisfy the requirements of item (3) above.

As to Item (3), the *Manual of Paten Examining Procedure*, Section 7711.03(c) provides, in pertinent part, that:

> >Where a petition pursuant to 37 CFR 1.137(b) is not filed within 1 year of the date of abandonment of the application (note that abandonment takes place by operation of law, rather than by the mailing of a Notice of Abandonment), the Office may require:
>
> (A) further information as to when the applicant (or the applicant's representative) first became aware of the abandonment of the application; and
>
> (B) a showing as to how the delay in discovering the abandoned status of the application occurred despite the exercise of due care or diligence on the part of the applicant (or applicant's representative).<
>
> To avoid delay in the consideration of the merits of a petition under 37 CFR **>1.137(b)< in instances in which such petition was not filed within 1 year of the date of abandonment of the application, applicants should include:
>
> (A) the date that the applicant first became aware of the abandonment of the application; and
>
> (B) a showing as to how the delay in discovering the abandoned status of the application occurred despite the exercise of due care or diligence on the part of the applicant.
>
> In either instance, applicant's failure to carry the burden of proof to establish that the "entire" delay was "unavoidable" or "unintentional" may lead to the denial of a petition under 37 CFR 1.137(a) or 37 CFR 1.137(b), regardless of the circumstances that originally resulted in the abandonment of the application.

Petitioner did not provide not explanation for the extended delay in filing the instant petition. Accordingly, the renewed petition must be accompanied by an explanation for said delay including, but not limited to, the considerations provided in MPEP § 711.03(c) cited above.

Further correspondence with respect to this matter should be addressed as follows:

By mail:

Mail Stop Petitions
Commissioner for Patents
United States Patent and Trademark Office
Box 1450
Alexandria, VA 22313-1450

By facsimile: (571) 273-8300
Attn: Office of Petitions

Telephone inquiries concerning this decision may be directed to the undersigned at (571) 272-3222.

Kenya A. McLaughlin
Petitions Attorney
Office of Petitions

UNITED STATES PATENT AND TRADEMARK OFFICE

Commissioner for Patents
United States Patent and Trademark Office
P.O. Box 1450
Alexandria, VA 22313-1450
www.uspto.gov

Eitan Law Group
C/O LandonIP, Inc.
Suite 450
1700 Diagonal Road
Alexandria VA 22314

COPY MAILED

JUN 0 9 2008

OFFICE OF PETITIONS

In re Application of

Maayan, et al.

Application No. 10/155,215

Filed: May 28, 2002

Attorney Docket No. P3364-US1

DECISION ON PETITION

This is a decision on the renewed petition under 37 CFR 1.137(b), filed March 3, 2008, to revive the above-identified application.

The renewed petition is **GRANTED**.

The above-cited application became abandoned for failure to respond to file an appeal brief after the filing of a Notice of Appeal on August 23, 2005. A Notice of Abandonment was mailed on April 17, 2006. A petition under 37 CFR 1.137(b) was first filed on January 7, 2007, and dismissed by a decision mailed September 28, 2007, which allowed a two month period in which to file a renewed petition. The instant petition was not filed until March 8, 2008. An extension of time within the fourth month is required. Deposit account 50-3400 will be charged $590.00 for the additional amount owed as $1050.00 was previously charged for an extension of time within third month.

The Request for Continued Examination, filed January 7, 2008, is noted.

The application is being forwarded to Technology Center 2800, GAU 2827 for further processing.

Telephone inquiries concerning this decision should be directed to the undersigned at (571) 272-3222.

Kenya A. McLaughlin
Petitions Attorney
Office of Petitions

UNITED STATES PATENT AND TRADEMARK OFFICE

COMMISSIONER FOR PATENTS
UNITED STATES PATENT AND TRADEMARK OFFICE
P.O. BOX 1450
ALEXANDRIA, VA 22313-1450
www.uspto.gov

EITAN PEARL LATZER & COHEN ZEDEK
10 ROCKEFELLER PLAZA, SUITE 1001
NEW YORK, NY 10020

COPY MAILED

MAR 3 0 2004

OFFICE OF PETITIONS

ON PETITION

In re Application of :
Ilan Bloom et al :
Application No. 10/155,217 :
Filed: May 28, 2002 :
Attorney Docket No. P-2448-US4 :

This is a decision on the petition, filed March 23, 2004, under 37 CFR 1.313(c)(2) to withdraw the above-identified application from issue after payment of the issue fee.

The petition is **GRANTED**.

The above-identified application is withdrawn from issue for consideration of a submission under 37 CFR 1.114 (request for continued examination). See 37 CFR 1.313(c)(2).

Petitioner is advised that the issue fee paid on February 19, 2004, in the above-identified application cannot be refunded. If, however, the above-identified application is again allowed, petitioner may request that it be applied towards the issue fee required by the new Notice of Allowance.[1]

Telephone inquiries should be directed to Wan Laymon at (703) 306-5685.

This matter is being referred to Technology Center AU 2818 for processing of the request for continued examination under 37 CFR 1.114.

Wan Laymon
Petitions Examiner
Office of Petitions
Office of the Deputy Commissioner
for Patent Examination Policy

---

[1] The request to apply the issue fee to the new Notice may be satisfied by completing and returning the new Issue Fee Transmittal Form PTOL-85(b), which includes the following language thereon: "Commissioner for Patents is requested to apply the Issue Fee and Publication Fee (if any) or re-apply any previously paid issue fee to the application identified above." Petitioner is advised that, whether a fee is indicated as being due or not, the Issue Fee Transmittal Form **must** be completed and timely submitted to avoid abandonment. Note the language in bold text on the first page of the Notice of Allowance and Fee(s) Due (PTOL-85).

UNITED STATES PATENT AND TRADEMARK OFFICE

COMMISSIONER FOR PATENTS
UNITED STATES PATENT AND TRADEMARK OFFICE
P.O. BOX 1450
ALEXANDRIA, VA 22313-1450
WWW.USPTO.GOV

Paper No. 10

COPY MAILED

DEC 17 2003

OFFICE OF PETITIONS

EASTMAN CHEMICAL RESINS, INC.
P.O. BOX 511
KINGSPORT TN 37662-5075

In re Application of
Daniel W. Klosiewicz
Application No. 10/155,261
Filed: May 24, 2002
Attorney Docket No.: 71464US3
Title: HIGH DENSITY POLYETHYLENE FILMS WITH IMPROVED BARRIER PROPERTIES

DECISION ON RENEWED PETITION

This is a decision on the renewed petition under 37 CFR § 1.137(b)[1], filed November 25, 2003, to revive the above-identified application.

The above-identified application became abandoned for failure to reply in a timely manner to the non-final Office action, mailed January 2, 2003, which set a shortened statutory period for reply of three (3) months. No response was received, and no extensions of time under the provisions of 37 C.F.R. §1.136(a) were requested. Accordingly, the above-identified application became abandoned on April 3, 2003. A Notice of Abandonment was mailed on October 1, 2003.

With the instant petition, petitioner has submitted the petition fee, along with a fee for additional claims, has made the proper statement of unintentional delay, and has submitted an amendment.

As such, the petition is **GRANTED**.

After this decision is mailed, the application will be forwarded to Technology Center 1700 for further processing.

---

1 A grantable petition pursuant to 37 CFR 1.137(b) must be accompanied by:

(1) The reply required to the outstanding Office action or notice, unless previously filed;
(2) The petition fee as set forth in § 1.17(m);
(3) A statement that the entire delay in filing the required reply from the due date for the reply until the filing of a grantable petition pursuant to this paragraph was unintentional. The Commissioner may require additional information where there is a question whether the delay was unintentional, and;
(4) Any terminal disclaimer (and fee as set forth in § 1.20(d)) required pursuant to paragraph (d) of this section.

Telephone inquiries regarding this decision should be directed to the undersigned at (703) 305-0011.

Paul Shanoski
Attorney
Office of Petitions
United States Patent and Trademark Office

UNITED STATES PATENT AND TRADEMARK OFFICE

Commissioner for Patents
United States Patent and Trademark Office
P.O. Box 1450
Alexandria, VA 22313-1450
www.uspto.gov

COPY MAILED
SEP 28 2006
OFFICE OF PETITIONS

Gregory J. Battersby, Esq.
GRIMES & BATTERSBY, LLP
488 Main Avenue, Third Floor
Norwalk, CT 06851

In re Application of

Gordon, et al.

Application No. 10/155,264

Filed: May 24, 2002

Attorney Docket No. ZOM002USQ14

DECISION ON PETITION

This is a decision on the petition under 37 CFR §1.137(b), March 31, 2006, to revive the above-identified application.

The petition is **granted**.

This application became abandoned for failure to timely file formal drawings as required by the Notice of Allowability (the "Notice") mailed August 26, 2005. The Notice set forth a three (3) month statutory period for reply. No response was received within the allowable period. Accordingly, this application became abandoned on November 27, 2005. A Notice of Abandonment was mailed on January 27, 2006.

Formal drawings were received on March 31, 2006.

The application is being forwarded to the Office of Patent Publications for further processing.

Telephone inquiries concerning this matter may be directed to the undersigned at (571) 272-3222.

Kenya A. McLaughlin
Petitions Attorney
Office of Petitions

UNITED STATES PATENT AND TRADEMARK OFFICE

COMMISSIONER FOR PATENTS
UNITED STATES PATENT AND TRADEMARK OFFICE
P.O. BOX 1450
ALEXANDRIA, VA 22313-1450
www.uspto.gov

MAILED

APR 19 2004

Director's Office
Group 3700

Paper No. 9

In re Application of
Oleg Naljotov
Application No.: 10155278
Filed: May 24, 2002

DECISION ON PETITION

This is a decision on petitioner's request filed March 22, 2004, requesting withdrawal of the holding of abandonment of the above-identified application because the applicant did not receive the Office communication mailed on July 2, 2003 at the correspondence address of record.

The petition is granted.

In support of the request, petitioner has provided a showing of non-receipt of the Office action in accordance with Official Gazette Notice 1156 O.G. 53 (November 16, 1993). MPEP 711.03(c)II.

In view of the above, the Notice of Abandonment mailed Jan. 20, 2004 is in error and is hereby vacated. The holding of abandonment is withdrawn.

The Office communication will be remailed and the shortened statutory period that was originally set forth in the Office communication shall be restarted to run from the mail date of the newly supplied Office action or notice.

Summary: Holding of Abandonment Withdrawn.

Richard A. Bertsch, Director
Technology Center 3700

UNITED STATES PATENT AND TRADEMARK OFFICE

COMMISSIONER FOR PATENTS
UNITED STATES PATENT AND TRADEMARK OFFICE
P.O. BOX 1450
ALEXANDRIA, VA 22313-1450
www.uspto.gov

Pate Pierce & Baird, PC
550 Parkside Tower
215 South State Street
Salt Lake City, UT 84111

COPY MAILED
DEC 26 2007
OFFICE OF PETITIONS

In re Patent No. 7,171,546 :
Issue Date: January 30, 2007 :
Application No. 10/155,284 : NOTICE
Filed: May 23, 2002 :
Patentee(s): Phillip M. Adams :

This is a notice regarding a request for acceptance of a fee deficiency submission under 37 CFR 1.28 filed on March 6, 2007. On September 1, 1998, the Court of Appeals for the Federal Circuit held that 37 CFR 1.28(c) is the sole provision governing the time for correction of the erroneous payment of the issue fee as a small entity. **See DH Technology v. Synergystex International, Inc. 154 F.3d 1333, 47 USPQ2d 1865 (Fed. Cir. Sept. 1, 1998).**

The Office no longer investigates or rejects original or reissue applications under 37 CFR 1.56. **1098 Off. Gaz. Pat. Office 502 (January 3, 1989).** Therefore, nothing in this Notice is intended to imply that an investigation was done.

Your fee deficiency submission under 37 CFR 1.28 is hereby **ACCEPTED**. Therefore, status as a small entity has been removed and all future fees paid must be paid at the large entity rate.

Inquiries related to this communication should be directed to the undersigned at (571) 272-3226.

Andrea Smith
Petitions Examiner
Office of Petitions

UNITED STATES PATENT AND TRADEMARK OFFICE

COMMISSIONER FOR PATENTS
UNITED STATES PATENT AND TRADEMARK OFFICE
P.O. BOX 1450
ALEXANDRIA, VA 22313-1450
www.uspto.gov

BRINKS HOFER GILSON & LIONE
P.O. BOX 10395
CHICAGO, IL 60610

COPY MAILED

FEB 10 2006

OFFICE OF PETITIONS

In re Application of
Daniel C. Fain, et al.
Application No. 10/155,290
Filed: May 24, 2002
Attorney Docket No.: 9623/413

ON PETITION

This is a decision on the petition, filed February 3, 2006, under 37 CFR 1.313(c)(2) to withdraw the above-identified application from issue after payment of the issue fee.

The petition is **GRANTED**.

The above-identified application is withdrawn from issue for consideration of a submission under 37 CFR 1.114 (request for continued examination). See 37 CFR 1.313(c)(2).

Petitioner is advised that the issue fee paid on January 17, 2006, in the above-identified application cannot be refunded. If, however, the above-identified application is again allowed, petitioner may request that it be applied towards the issue fee required by the new Notice of Allowance. [1]

Telephone inquiries relating to this decision should be directed to the undersigned at (571) 272-3204.

The application is being referred to Technology Center AU 2166 for further processing of the request for continued examination under 37 CFR 1.114.

Sherry D. Brinkley
Petitions Examiner
Office of Petitions

[1]The request to apply the issue fee to the new Notice may be satisfied by completing and returning the new Issue Fee Transmittal Form PTOL-85(b), which includes the following language thereon: "Commissioner for Patents is requested to apply the Issue Fee and Publication Fee (if any) or re-apply any previously paid issue fee to the application identified above." Petitioner is advised that, whether a fee is indicated as being due or not, the Issue Fee Transmittal Form **must** be completed and timely submitted to avoid abandonment. Note the language in bold text on the first page of the Notice of Allowance and Fee(s) Due (PTOL-85).

UNITED STATES PATENT AND TRADEMARK OFFICE

Commissioner for Patents
United States Patent and Trademark Office
P.O. Box 1450
Alexandria, VA 22313-1450
www.uspto.gov

Paper No.

BRINKS HOFER GILSON & LIONE
/YAHOO! OVERTURE
P.O. BOX 10395
CHICAGO, IL 60610

COPY MAILED

MAR 0 8 2006

OFFICE OF PETITIONS

In re Application of
Fain et al.
Application No. 10/155,290
Filed: May 24, 2002
Atty Docket No. 9623/413

ON APPLICATION FOR
PATENT TERM ADJUSTMENT

This is a decision on the "REQUEST FOR RECONSIDERATION OF PATENT TERM ADJUSTMENT PURSUANT TO 37 C.F.R. § 1.705(b)," filed January 17, 2006.

The request is **dismissed**.

Applicants are advised that § 1.705(b) provides the avenue before the Office for requesting reconsideration of the patent term adjustment indicated in the notice of allowance. See § 1.702-1.705. Moreover, § 1.705(b) provides that:

> An application for patent term adjustment under this section must be filed no later than the payment of the issue fee but may not be filed earlier than the date of mailing of the notice of allowance. An application for patent term adjustment under this section must be accompanied by:
>
> (1) The fee set forth in § 1.18(e) ...

The instant request was filed after the mailing of the notice of allowance and prior to payment of the issue fee. However, neither the fee under § 1.18(e) nor a general authorization to charge any required fees, accompanied the request. The authorization submitted with this application and the issue fee authorizes only fees required under §§ 1.16 and 1.17. Accordingly, the request is dismissed for failure to comply with the requirement of paragraph (b)(1) to submit the fee under § 1.18(e).

Pursuant to a decision granting a petition to withdraw from issue, this application has been forwarded to the Technology Center for consideration of the RCE filed February 3, 2006.

Telephone inquiries specific to this matter should be directed to the undersigned at 571-272-3219.

Nancy Johnson
Senior Petitions Attorney
Office of Petitions

UNITED STATES PATENT AND TRADEMARK OFFICE

COMMISSIONER FOR PATENTS
UNITED STATES PATENT AND TRADEMARK OFFICE
P.O. BOX 1450
ALEXANDRIA, VA 22313-1450
www.uspto.gov

BRINKS HOFER GILSON & LIONE / YAHOO! OVERTURE
P.O. BOX 10395
CHICAGO, IL 60610

COPY MAILED

JUN 15 2006

OFFICE OF PETITIONS

In re Application of	:	
Daniel C. Fain, et al.	:	
Application No. 10/155,290	:	ON PETITION
Filed: May 24, 2002	:	
Attorney Docket No.: 9623/413	:	

This is a decision on the petition, filed June 12, 2006, under 37 CFR 1.313(c)(2) to withdraw the above-identified application from issue after payment of the issue fee.

The petition is **GRANTED**.

The above-identified application is withdrawn from issue for consideration of a submission under 37 CFR 1.114 (request for continued examination). See 37 CFR 1.313(c)(2).

Petitioner is advised that the issue fee paid on May 8, 2006, in the above-identified application cannot be refunded. If, however, the above-identified application is again allowed, petitioner may request that it be applied towards the issue fee required by the new Notice of Allowance. [1]

Telephone inquiries relating to this decision should be directed to the undersigned at (571) 272-3204.

The application is being referred to Technology Center AU 2166 for further processing of the request for continued examination under 37 CFR 1.114.

Sherry D. Brinkley
Petitions Examiner
Office of Petitions

[1]The request to apply the issue fee to the new Notice may be satisfied by completing and returning the new Issue Fee Transmittal Form PTOL-85(b), which includes the following language thereon: "Commissioner for Patents is requested to apply the Issue Fee and Publication Fee (if any) or re-apply any previously paid issue fee to the application identified above." Petitioner is advised that, whether a fee is indicated as being due or not, the Issue Fee Transmittal Form **must** be completed and timely submitted to avoid abandonment. Note the language in bold text on the first page of the Notice of Allowance and Fee(s) Due (PTOL-85).

UNITED STATES PATENT AND TRADEMARK OFFICE

COMMISSIONER FOR PATENTS
UNITED STATES PATENT AND TRADEMARK OFFICE
P.O. BOX 1450
ALEXANDRIA, VA 22313-1450
www.uspto.gov

BRINKS HOFER GILSON & LIONE / YAHOO! OVERTURE
P.O. BOX 10395
CHICAGO, IL 60610

COPY MAILED

NOV 0 2 2006

OFFICE OF PETITIONS

In re Application of	:	
Daniel C. Fain, et al.	:	
Application No. 10/155,290	:	ON PETITION
Filed: May 24, 2002	:	
Attorney Docket No.: 9623/413	:	

This is a decision on the petition, filed October 26, 2006, under 37 CFR 1.313(c)(2) to withdraw the above-identified application from issue after payment of the issue fee.

The petition is **GRANTED**.

The above-identified application is withdrawn from issue for consideration of a submission under 37 CFR 1.114 (request for continued examination). See 37 CFR 1.313(c)(2).

Petitioner is advised that the issue fee paid on August 28, 2006, in the above-identified application, cannot be refunded. If, however, the above-identified application is again allowed, petitioner may request that it be applied towards the issue fee required by the new Notice of Allowance. [1]

Telephone inquiries relating to this decision should be directed to the undersigned at (571) 272-3204.

The application is being referred to Technology Center AU 2166 for further processing of the request for continued examination under 37 CFR 1.114.

Sherry D. Brinkley
Petitions Examiner
Office of Petitions

[1]The request to apply the issue fee to the new Notice may be satisfied by completing and returning the new Issue Fee Transmittal Form PTOL-85(b), which includes the following language thereon: "Commissioner for Patents is requested to apply the Issue Fee and Publication Fee (if any) or re-apply any previously paid issue fee to the application identified above." Petitioner is advised that, whether a fee is indicated as being due or not, the Issue Fee Transmittal Form **must** be completed and timely submitted to avoid abandonment. Note the language in bold text on the first page of the Notice of Allowance and Fee(s) Due (PTOL-85).

UNITED STATES PATENT AND TRADEMARK OFFICE

Commissioner for Patents
United States Patent and Trademark Office
P.O. Box 1450
Alexandria, VA 22313-1450
www.uspto.gov

Paper No.

BRINKS HOFER GILSON & LIONE
/YAHOO! OVERTURE
P.O. BOX 10395
CHICAGO, IL 60610

COPY MAILED

APR 1 9 2007

OFFICE OF PETITIONS

In re Application of Fain et al. Application No. 10/155,290 Filed: May 24, 2002 Atty Docket No. 9623/413	: : : : : : :	ON APPLICATION FOR PATENT TERM ADJUSTMENT

This is a decision on the "REQUEST FOR REVIEW OF PATENT TERM ADJUSTMENT," filed January 29, 2007. Applicants request review on the basis that the patent term adjustment at the time of the mailing of the notice of allowance may extend the patent by too many days.

The request is **granted**.

The Office has updated the PAIR screen to reflect that the correct Patent Term Adjustment (PTA) determination at the time of the mailing of the Notice of Allowance is two hundred forty-seven **(247)** days. A copy of the updated PAIR screen, showing the correct determination, is enclosed.

On January 10, 2007, the Office mailed the Determination of Patent Term Adjustment under 35 U.S.C. 154(b) in the above-identified application. The Notice stated that the patent term adjustment to date is 372 days. Applicants submit no basis for their assertion that the PTA may be incorrect.

Nonetheless, a review of the record confirms further basis for entry of periods of reduction. 37 CFR 1.704(c)(10) provides that:

> Submission of an amendment under § 1.312 or other paper after a notice of allowance has been given or mailed, in which case the period of adjustment set forth in § 1.703 shall be reduced by the lesser of:
>
> (i) The number of days, if any, beginning on the date the amendment under § 1.312 or other paper was filed and ending on the mailing date of the Office action or notice in response to the amendment under § 1.312 or such other paper; or
>
> (ii) Four months;

In this instance, after the mailing of a notice of allowance on November 4, 2005 (and payment of the issue fee on January 17, 2006) on February 3, 2006, applicants filed a petition to withdraw from issue, a request for continued examination (RCE) and an Information Disclosure Statement (IDS). The IDS did not include a 1.704(d) statement. On April 14, 2006, the Office mailed a paper in response. Thus, a period of reduction of 71 days for the period beginning on February 3, 2006 and ending on April 14, 2006 should have been entered, pursuant to 1.704©)(10).

Furthermore, after the mailing of the notice of allowance on April 14, 2006 (and after the payment of the issue fee on May 8, 2006) on June 12, 2006, applicants filed a petition to withdraw from issue, a request for continued examination (RCE) and an Information Disclosure Statement (IDS). The IDS did not include a 1.704(d) statement. A further IDS was filed on June 22, 2006. It also did not include a 1.704(d) statement. On July 11, 2006, a Notice of Allowance with a response to the June 12, 2006 IDS was mailed. On August 4, 2006, the Office mailed a paper in response to the June 22, 2006 IDS. Thus, a period of reduction of 54 days for the period beginning on June 12, 2006 and ending on August 4, 2006 should have been entered, pursuant to 1.704©)(10).

In view thereof, the patent term adjustment at the time of the mailing is two hundred forty-seven (247) days.

As this letter was submitted as an advisement to the Office of an error in Applicant's favor, the Office will not assess the $200.00 application fee under 37 CFR 1.705(b). The Office thanks applicants for their good faith and candor in bringing this to the attention of the Office.

The application is being forwarded to the Publications Division for issuance of a patent. The patent term adjustment indicated on the patent (as shown on the Issue Notification mailed about three weeks prior to patent issuance) will include any additional adjustment accrued both for Office delay in issuing the patent more than four months after payment of the issue fee and satisfaction of all outstanding requirements, and for the Office taking in excess of three years to issue the patent (to the extent that the three-year period does not overlap with periods already accorded).

Telephone inquiries specific to this matter should be directed to the undersigned at 571-272-3219.

Nancy Johnson
Senior Petitions Attorney
Office of Petitions

Enclosure: Copy of REVISED PALM screen

Day : Wednesday

PALM INTRANET

Date: 4/18/2007
Time: 14:19:26

PTA Calculations for Application: 10/155290			
Application Filing Date:	05/24/2002	PTO Delay (PTO):	440
Issue Date of Patent:		Three Years:	0
Pre-Issue Petitions:	0	Applicant Delay (APPL):	68
Post-Issue Petitions:	0	Total PTA (days):	247
PTO Delay Adjustment:	-125		

File Contents History

Number	Date	Contents Description	PTO	APPL	START
120	04/18/2007	ADJUSTMENT OF PTA CALCULATION BY PTO		71	
119	04/18/2007	ADJUSTMENT OF PTA CALCULATION BY PTO		54	
113	01/10/2007	MAIL NOTICE OF ALLOWANCE			
112	01/09/2007	ISSUE REVISION COMPLETED			
111	01/09/2007	NOTICE OF ALLOWANCE DATA VERIFICATION COMPLETED			
110	01/05/2007	NOTICE OF ALLOWABILITY			
109	10/26/2006	INFORMATION DISCLOSURE STATEMENT CONSIDERED			
108	10/26/2006	INFORMATION DISCLOSURE STATEMENT (IDS) FILED			
107	11/16/2006	DATE FORWARDED TO EXAMINER			
106	10/26/2006	REQUEST FOR CONTINUED EXAMINATION (RCE)			
105	11/16/2006	DISPOSAL FOR A RCE/CPA/129 (EXPRESS ABANDONMENT IF CPA)			
104	11/02/2006	RECORD PETITION DECISION OF GRANTED TO WITHDRAW FROM ISSUE			
103	10/26/2006	PETITION ENTERED			
102	10/26/2006	WORKFLOW - REQUEST FOR RCE - BEGIN			
101	10/17/2006	EXPORT TO FINAL DATA CAPTURE			
100	08/28/2006	ISSUE FEE PAYMENT VERIFIED			
99	10/16/2006	DISPATCH TO FDC			
98	08/28/2006	ISSUE FEE PAYMENT VERIFIED			
97	08/28/2006	ISSUE FEE PAYMENT RECEIVED			
96	01/17/2006	REVERSE ISSUE FEE			
95	09/15/2006	REVERSAL OF ISSUE FEE PAYMENT			
94	08/28/2006	ISSUE FEE PAYMENT VERIFIED			

93	08/04/2006	MAIL MISCELLANEOUS COMMUNICATION TO APPLICANT			
92	08/03/2006	MISCELLANEOUS COMMUNICATION TO APPLICANT - NO ACTION COUNT			
91	06/22/2006	INFORMATION DISCLOSURE STATEMENT CONSIDERED			
90	06/22/2006	REFERENCE CAPTURE ON IDS			
89	06/22/2006	INFORMATION DISCLOSURE STATEMENT (IDS) FILED			
88	07/14/2006	EXPORT TO INITIAL DATA CAPTURE			
87	07/11/2006	MAIL NOTICE OF ALLOWANCE			
86	06/28/2006	ISSUE REVISION COMPLETED			
85	06/28/2006	NOTICE OF ALLOWANCE DATA VERIFICATION COMPLETED			
84	06/26/2006	NOTICE OF ALLOWABILITY			
83	06/12/2006	INFORMATION DISCLOSURE STATEMENT CONSIDERED			
82	06/12/2006	INFORMATION DISCLOSURE STATEMENT (IDS) FILED			
81	06/19/2006	DATE FORWARDED TO EXAMINER			
80	06/12/2006	REQUEST FOR CONTINUED EXAMINATION (RCE)			
79	06/19/2006	DISPOSAL FOR A RCE/CPA/129 (EXPRESS ABANDONMENT IF CPA)			
78	06/15/2006	RECORD PETITION DECISION OF GRANTED TO WITHDRAW FROM ISSUE			
77	06/12/2006	PETITION ENTERED			
76	06/12/2006	WORKFLOW - REQUEST FOR RCE - BEGIN			
75	06/02/2006	EXPORT TO FINAL DATA CAPTURE			
74	06/01/2006	DISPATCH TO FDC			
73	05/27/2006	APPLICATION IS CONSIDERED READY FOR ISSUE			
72	05/08/2006	ISSUE FEE PAYMENT VERIFIED			
71	04/17/2006	EXPORT TO INITIAL DATA CAPTURE			
70	04/14/2006	MAIL NOTICE OF ALLOWANCE			
69	03/31/2006	ISSUE REVISION COMPLETED			
68	03/31/2006	NOTICE OF ALLOWANCE DATA VERIFICATION COMPLETED			
67	03/31/2006	NOTICE OF ALLOWABILITY			
66	02/07/2006	INFORMATION DISCLOSURE STATEMENT CONSIDERED			

65	03/13/2006	FINISHED INITIAL DATA CAPTURE			
64	02/07/2006	INFORMATION DISCLOSURE STATEMENT (IDS) FILED			
63	03/21/2006	DATE FORWARDED TO EXAMINER			
62	02/03/2006	REQUEST FOR CONTINUED EXAMINATION (RCE)			
61	03/21/2006	DISPOSAL FOR A RCE/CPA/129 (EXPRESS ABANDONMENT IF CPA)			
60	03/08/2006	PETITION DECISION - DISMISSED			
59	02/10/2006	RECORD PETITION DECISION OF GRANTED TO WITHDRAW FROM ISSUE			
58	02/03/2006	PETITION ENTERED			
57	02/03/2006	WORKFLOW - REQUEST FOR RCE - BEGIN			
55	01/17/2006	ISSUE FEE PAYMENT VERIFIED			
54	01/30/2006	WORKFLOW - QUERY REQUEST - FINISH			
53	01/24/2006	TC RETURN TO PUBS			
52	01/17/2006	PETITION ENTERED			
51	01/09/2006	PUBS CASE REMAND TO TC			
50	01/17/2006	ISSUE FEE PAYMENT RECEIVED			
49	01/13/2006	WORKFLOW - QUERY REQUEST - BEGIN			
48	11/14/2005	EXPORT TO INITIAL DATA CAPTURE			
47	11/04/2005	MAIL NOTICE OF ALLOWANCE			
46	11/04/2005	MAIL EXAMINER'S AMENDMENT			
45	11/02/2005	ISSUE REVISION COMPLETED			
44	11/02/2005	NOTICE OF ALLOWANCE DATA VERIFICATION COMPLETED			
43	10/31/2005	EXAMINER'S AMENDMENT COMMUNICATION			
42	10/31/2005	NOTICE OF ALLOWABILITY			
41	10/06/2005	CASE DOCKETED TO EXAMINER IN GAU			
40	09/13/2005	DATE FORWARDED TO EXAMINER			
39	09/13/2005	WITHDRAWAL OF NOTICE OF ALLOWANCE			
38	09/09/2005	CORRESPONDENCE ADDRESS CHANGE			
37	08/02/2005	EXPORT TO INITIAL DATA CAPTURE			
36	07/28/2005	MAIL NOTICE OF ALLOWANCE			
35	07/26/2005	ISSUE REVISION COMPLETED			
34	07/26/2005	NOTICE OF ALLOWANCE DATA VERIFICATION COMPLETED			
33	07/25/2005	NOTICE OF ALLOWABILITY			
32	05/31/2005	INFORMATION DISCLOSURE STATEMENT (IDS)		22	29

		FILED			
31	05/10/2005	INFORMATION DISCLOSURE STATEMENT (IDS) FILED			
30	05/17/2005	DATE FORWARDED TO EXAMINER			
29	05/09/2005	RESPONSE AFTER NON-FINAL ACTION		5	27
28	12/13/2004	INFORMATION DISCLOSURE STATEMENT (IDS) FILED		35	24
27	02/04/2005	MAIL NON-FINAL REJECTION			
26	02/04/2005	NON-FINAL REJECTION			
25	12/08/2004	DATE FORWARDED TO EXAMINER			
24	11/08/2004	RESPONSE TO ELECTION / RESTRICTION FILED			
23	05/20/2004	REFERENCE CAPTURE ON IDS			
22	06/27/2003	REFERENCE CAPTURE ON IDS			
21	11/08/2004	WORKFLOW INCOMING AMENDMENT IFW			
20	10/06/2004	CASE DOCKETED TO EXAMINER IN GAU			
19	10/06/2004	MAIL RESTRICTION REQUIREMENT	440		-1
18	09/30/2004	REQUIREMENT FOR RESTRICTION / ELECTION			
17	09/07/2004	CASE DOCKETED TO EXAMINER IN GAU			
16	08/23/2004	IFW TSS PROCESSING BY TECH CENTER COMPLETE			
15	10/18/2002	REFERENCE CAPTURE ON IDS			
14	10/18/2002	INFORMATION DISCLOSURE STATEMENT (IDS) FILED			
13	06/22/2004	CASE DOCKETED TO EXAMINER IN GAU			
12	05/20/2004	INFORMATION DISCLOSURE STATEMENT (IDS) FILED			
11	12/11/2003	CASE DOCKETED TO EXAMINER IN GAU			
10	11/10/2003	INFORMATION DISCLOSURE STATEMENT (IDS) FILED			
9	06/27/2003	INFORMATION DISCLOSURE STATEMENT (IDS) FILED			
8	11/08/2002	CASE DOCKETED TO EXAMINER IN GAU			
7	10/15/2002	APPLICATION DISPATCHED FROM OIPE			
6	10/15/2002	APPLICATION IS NOW COMPLETE			
5	09/30/2002	ADDITIONAL APPLICATION FILING FEES		6	3
4	09/30/2002	A STATEMENT BY ONE OR MORE INVENTORS SATISFYING THE REQUIREMENT UNDER 35 USC 115, OATH OF THE APPLIC			
3	06/24/2002	NOTICE MAILED--APPLICATION INCOMPLETE--FILING DATE ASSIGNED			

2	06/03/2002	IFW SCAN & PACR AUTO SECURITY REVIEW			
1	05/24/2002	INITIAL EXAM TEAM NN			

Search Another: Application# Search

EXPLANATION OF PTA CALCULATION

EXPLANATION OF PTE CALCULATION

To go back use Back button on your browser toolbar.

Back to PALM | ASSIGNMENT | OASIS | Home page

UNITED STATES PATENT AND TRADEMARK OFFICE

COMMISSIONER FOR PATENTS
UNITED STATES PATENT AND TRADEMARK OFFICE
P.O. BOX 1450
ALEXANDRIA, VA 22313-1450
www.uspto.gov

MAIL

Paper No. 3

NOV 06 2003

DIRECTOR OFFICE
TECHNOLOGY CENTER 2100

George T. Marcou
KILPATRICK STOCKTON LLP
3737 Glenwood Avenue, Suite 4000
Raleigh, NC 27612

In re Application of:	)	
John M. Moran, et al.	)	
Application No. 10/155,299	)	**DECISION ON REQUEST FOR**
Filed: May 24, 2002	)	**WITHDRAWAL AS ATTORNEY**
For: METHOD FOR MAPPING A NETWORK FABRIC	)	

This is a decision on the Request To Withdraw from Representation filed October 17, 2003.

A grantable request to withdraw as attorney of record should indicate thereon the present mailing addresses of the attorney(s) who is/are withdrawing from the record and of the applicant. The request for withdrawal must be signed by every attorney seeking to withdraw or contain a clear indication that one attorney is signing on behalf of another/others. A request to withdraw will not be approved unless at least 30 (thirty) days would remain between the date of approval and the later of the expiration date of a time to file a response or the expiration date of the maximum time period which can be extended under 37 C.F.R. § 1. 136(a). The effective date of withdrawal being the date of decision and not the date of request. See M.P.E.P. § 402.06. 37 C.F.R. § 1.36 further requires that the applicant or patent owner be notified of the withdrawal of the attorney or agent.

The request filed October 17, 2003 meets all the requirements. Accordingly the request is **GRANTED**.

All future communications from the Office will be directed to the above-listed address until otherwise notified by applicant. This correspondence address is provided by the withdrawn attorney(s). Applicant is reminded of the obligation to promptly notify the Patent and Trademark Office (Office) of any change in correspondence address to ensure receipt of all communications from the Office.

James R. Matthews

for Vincent N. Trans
Special Programs Examiner
Technology Center 2100
Computer Architecture and Software
(703) 305-9750

UNITED STATES PATENT AND TRADEMARK OFFICE

Commissioner for Patents
United States Patent and Trademark Office
P.O. Box 1450
Alexandria, VA 22313-1450
www.uspto.gov

Paper No. 7

Walter Scott
Coudert Brotherr LLP
1114 Avenue of the Americas
New York, NY 10036

COPY MAILED

NOV 03 2003

OFFICE OF PETITIONS

In re Application of	:	
Niels Diffrient	:	
Application No. 10/155,331	:	ON PETITION
Filed: May 24, 2002	:	
Attorney Docket No. 0007049/0157	:	

This is a decision on the petition under 37 CFR 1.137(b), filed October 23, 2003, to revive the above-identified application.

The petition is granted.

The above-identified application became abandoned for failure to reply in a timely manner to the non-final Office action mailed November 5, 2002, which set a shortened statutory period for reply of Thirty Days (30) from the mail date of the Notice. No extensions of time under the provisions of 37 CFR 1.136(a) were obtained. Accordingly, the application became abandoned on December 6, 2002.

The application file is being forwarded to Technology Center AU 3636 for further processing.

Telephone inquiries concerning this decision should be directed to Latrice Bond at (703) 308-6911.

Latrice Bond

Latrice Bond
Petitions Examiner
Office of Petitions
Office of the Deputy Commissioner
for Patent Examination Policy

UNITED STATES PATENT AND TRADEMARK OFFICE

Commissioner for Patents
United States Patent and Trademark Office
P.O. Box 1450
Alexandria, VA 22313-1450
www.uspto.gov

OCT 19 2005

Alston & Bird LLP
Bank Of America Plaza
101 South Tryon Street, Suite 4000
Charlotte, NC 28280-4000

In re application of	:	**DECISION ON PETITION**
Niels Diffrient	:	**TO MAKE SPECIAL**
Application No. 10/155,331	:	**(INFRINGEMENT)**
Filed: May 24, 2002	:	
For: ERGONOMIC CHAIR		

This is a decision on the petition under 37 C.F.R § 1.102(d) filed September 22, 2005 to make the above-identified application special. The petition requests that the above-identified application be made special under the procedure set forth in M.P.E.P. § 708.02, item II: Infringement.

MPEP 708.02 states that a Petition to Make Special based on Infringement must have the following: (1) the appropriate petition fee under 37 CFR 1.17(i); (2) a statement by the assignee, applicant, or attorney alleging: (A) that there is an infringing device or product actually on the market or method in use; (B) that a rigid comparison of the alleged infringing device, product or method with the claims of the application has been made, and that, in his or her opinion, some of the claims are unquestionably infringed; and (C) that he or she has made a careful and thorough search of the prior art, or has good knowledge of the prior art, and has sent a copy of the references deemed most closely related to the subject matter encompassed by the claims.

The petition filed September 22, 2005 lacks requirement 2(C), above.

Regarding item 2(C), there is no statement on record in the application alleging that applicant has made or caused to be made a careful and thorough search of the prior art, or has good knowledge of the prior art.

In reference to the statement that applicant is 65 years of age, an application may be accorded special status upon the filing of a petition providing evidence showing that the applicant is at least 65 years old. Such a showing may be provided by evidence such as a birth certificate or a statement from the applicant. Since there is no evidence showing that the applicant is at least 65 years of age, the age of applicant cannot be determined.

In view of these deficiencies, the petition is **DISMISSED**.

Any request for reconsideration must be filed within TWO MONTHS of the date of this decision. Extensions of time under 37 CFR 1.136(a) are permitted. Should petitioner desire reconsideration, he should supplement this petition by a declaration or statement giving the information as outlined above.

Applicant should promptly submit a renewed petition to the Commissioner for Patents, P.O. Box 1450, Alexandria, VA 22313-1450. The envelope should indicate that the correspondence be brought to the attention of Technology Center 3600.

Until the renewed petition is submitted, the application will be returned to the examiner's docket to await treatment on the merits in the normal order of examination.

SUMMARY: Petition to Make Special **DISMISSED**.

Kenneth J. Dorner
Special Programs Examiner
Technology Center 3600
(571) 272-6587

KJD/dcg: 10/6/05

UNITED STATES PATENT AND TRADEMARK OFFICE

COMMISSIONER FOR PATENTS
UNITED STATES PATENT AND TRADEMARK OFFICE
P.O. BOX 1450
ALEXANDRIA, VA 22313-1450
www.uspto.gov

JUL 14 2004

Paper No. 5

In re Application of
Harry H. Arzouman
Application No. 10/155,357
Filed: May 23, 2002
Attorney Docket No. HHA 1

DECISION ON PETITION

This is a decision on the petition filed on May 10, 2004 by which petitioner requests withdrawal of the examiner's holding that this application stands abandoned for failure to file a timely and proper reply to the Office letter dated September 2, 2003. The petition is considered pursuant to 37 CFR 1.181, and no fee is required.

The petition is granted.

Petitioner alleges that the application is not abandoned because a reply to the Office letter in question was actually filed on October 28, 2003. Petitioner has supported this allegation by furnishing a copy of the reply. The reply has affixed thereto a 37 CFR 1.8(a) certificate of mailing dated October 28, 2003, a date within the period for filing a reply to the Office letter in question. Based upon this evidence, it is clear that this application is not abandoned. See 37 CFR 1.8(b).

Accordingly, the Notice of Abandonment is hereby vacated, the holding of abandonment is withdrawn, and the application is restored to pending status. The application is being forwarded to the Head Supervisory Applications Examiner for entry of the reply filed on October 28, 2003. Thereafter, the application will be forwarded to the examiner for action on the reply.

PETITION GRANTED.

E. Rollins-Cross, Director
Technology Center 3700

Roger C. Turner
280 Cagney Ln.
Suite 306
Newport Beach, CA 92663

UNITED STATES PATENT AND TRADEMARK OFFICE

Commissioner for Patents
United States Patent and Trademark Office
P.O. Box 1450
Alexandria, VA 22313-1450
www.uspto.gov

MAY 27 2004

GLEEN M. SEAGER
CROMPTON. SEAGER & TUFTE, LLC
1221 NICOLLET AVENUE
SUITE 800
MINNEAPOLIS, MN 55403-2420

In re Application of	:	
OSTROVSKY et al	:	
Serial No.: 10/155,367	:	DECISION ON PETITION
Filed: May 23, 2002	:	
For: Atraumatic Anchoring and	:	
Disengagement Mechanism for Permanent	:	
Implant Device	:	

This is in response to the petition applicant filed on April 21, 2004 to make the above-identified application special under the provisions of 37 CFR 1.102(d).

Applicant has satisfied the provisions set forth in M.P.E.P. 708.02, VIII, thus the petition is **GRANTED**.

The application will be forwarded to the examiner for action on the merits commensurate with this decision.

Should there be any questions with regard to this letter please contact John Kittle by letter addressed to the Director, Technology Center 3700/2900, P.O. Box 1450 Alexandria, VA 22313-1450, or by telephone at (703) 308-0873 or by facsimile transmission at (703) 308-3139.

John E. Kittle

John E. Kittle
Director
Technology Center 3700/2900

UNITED STATES PATENT AND TRADEMARK OFFICE

COMMISSIONER FOR PATENTS
UNITED STATES PATENT AND TRADEMARK OFFICE
P.O. BOX 1450
ALEXANDRIA, VA 22313-1450
WWW.USPTO.GOV

Paper No. None

THOMSON multimedia Licensing Inc.
Patent Operations
Two Independence Way
P.O. Box 5312
Princeton NJ 08543-5312

COPY MAILED

MAY 25 2007

OFFICE OF PETITIONS

In re Application of	:	
Ralf Ostermann	:	
Application No. 10/155,371	:	DECISION ON PETITION
Filed: May 23, 2002	:	UNDER 37 C.F.R. §1.181
Attorney Docket No.: PD010037	:	
Title: METHOD AND APPARATUS FOR	:	
SIMPLIFYING THE ACCESS OF	:	
METADATA	:	

This is a decision on the petition filed March 12, 2007, pursuant to 37 C.F.R. §1.181, requesting that the holding of abandonment in the above-identified application be withdrawn.

The above-identified application became abandoned for failure to reply in a timely manner to the non-final Office action, mailed July 27, 2006, which set a shortened statutory period for reply of three months. No response was received, and no extensions of time under the provisions of 37 C.F.R. §1.136(a) were requested. Accordingly, the above-identified application became abandoned on October 28, 2006. A notice of abandonment was mailed on February 12, 2007.

With the present petition, Petitioner has asserted that a response was submitted on January 29, 2007 (it is noted that January 27, 2007 fell on a Saturday), along with a three-month extension of time. Petitioner has submitted a copy of this response, and it is noted that it contains a stamp from the Office of Initial Patent Examination dated February 8, 2007, as well as a certificate of mailing dated January 29, 2007.

The electronic file has been reviewed, and a copy of this response has been located in the same.

Furthermore, Office records confirm that a three-month extension of time was charged to Petitioner's Deposit Account on February 8, 2007.

Petitioner has requested that the holding of abandonment in the above-identified application be withdrawn. It is clear that a response was timely submitted on January 29, 2007, and received on February 8, 2007. Considering the facts and circumstances of the delay at issue, as set forth on petition, it is concluded that Petitioner has met his burden of establishing that a submission was timely submitted.

Accordingly, the petition under 37 C.F.R. §1.181(a) is **GRANTED**. The holding of abandonment is **WITHDRAWN**.

The Technology Center will be notified of this decision. The Technology Center's support staff will notify the Examiner of this decision, so that the response that was received on February 8, 2007 can be processed.

Telephone inquiries regarding *this decision* should be directed to the undersigned at (571) 272-3225[1]. All other inquiries concerning examination procedures or status of the application should be directed to the Technology Center.

Paul Shanoski
Senior Attorney
Office of Petitions
United States Patent and Trademark Office

1 Petitioner will note that all practice before the Office should be in writing, and the action of the Office will be based exclusively on the written record in the Office. See 37 C.F.R. §1.2. As such, Petitioner is reminded that no telephone discussion may be controlling or considered authority for Petitioner's further action(s).

UNITED STATES
PATENT AND
TRADEMARK OFFICE

#6

FEB 4 2003

UNDER SECRETARY OF COMMERCE FOR INTELLECTUAL PROPERTY
AND DIRECTOR OF THE UNITED STATES PATENT AND TRADEMARK OFFICE
WASHINGTON, D.C. 20231
WWW.USPTO.GOV

RICHARD R. ECKMAN
MORRISON & FOERSTER LLP
755 PAGE MILL ROAD
PALO ALTO CA 94304-1018

In re Application of	:
Joshua B. Rabinowitz et al	:
Serial No.: 10/155,373	: PETITION TO MAKE SPECIAL
Filed: May 22, 2002	:
Attorney Docket No.: 509032004000	:

This is in response to applicants' petition filed January 17, 2003, to make the above-identified application special under the provisions of 37 CFR 1.102(c), based on the age of the applicant.

Applicant has satisfied the provisions set forth in M.P.E.P. 708.02, IV. Therefor the petition is **GRANTED**.

The application will be forwarded to the examiner for action on the merits commensurate with this decision.

Should there be any questions with regard to this letter please contact William R. Dixon, Jr. by letter addressed to the Director, Technology Center 1600, Washington, DC 20231, or by telephone at (703) 308-3824 or by facsimile transmission at (703) 305-3599.

William R. Dixon, Jr.
Special Program Examiner
Technology Center 1600

UNITED STATES PATENT AND TRADEMARK OFFICE

Commissioner for Patents
United States Patent and Trademark Office
P.O. Box 1450
Alexandria, VA 22313-1450
www.uspto.gov

PAUL J. WHITE, SENIOR COUNSEL
NATIONAL RENEWABLE ENERGY LABORATORY (NREL)
1617 COLE BOULEVARD
GOLDEN, CO 80401-3393

COPY MAILED

DEC 2 0 2005

OFFICE OF PETITIONS

In re Application of :
Shi-you Ding et al. :
Application No. 10/155,400 :
Filed: October 18, 2002 :
Attorney Docket No.: NREL 01-36A :

ON PETITION

This is a decision on the petition filed December 8, 2005 under 37 CFR 1.137(b),[1] to revive the above-identified application.

The petition is **GRANTED**.

This application became abandoned for failure to timely reply to the non-Final Office Action mailed May 6, 2005. A shortened statutory period of three months was set for replying to the non-Final Office Action. No extensions of time having been requested, this application became abandoned August 7, 2005. The instant petition and this decision precede the mailing of the Notice of Abandonment.

This matter is being referred to Technology Center 1656 for appropriate action on the amendment filed December 8, 2005.

Telephone inquiries concerning this matter should be directed to the undersigned Petitions Attorney at (571) 272-3212.

Patricia Faison-Ball
Senior Petitions Attorney
Office of Petitions

---

[1]Effective December 1, 1997, the provisions of 37 CFR 1.137(b) now provide that where the delay in reply was unintentional, a petition may be filed to revive an abandoned application or a lapsed patent pursuant to 37 CFR 1.137(b). A grantable petition filed under the provisions of 37 CFR 1.137(b) must be accompanied by:

(1) the required reply, unless previously filed. In a nonprovisional application abandoned for failure to prosecute, the required reply may be met by the filing of a continuing application. In a nonprovisional application filed on or after June 8, 1995, and abandoned for failure to prosecute, the required reply may also be met by the filing of a request for continued examination in compliance with § 1.114. In an application or patent, abandoned or lapsed for failure to pay the issue fee or any portion thereof, the required reply must be the payment of the issue fee or any outstanding balance thereof. In an application abandoned for failure to pay the publication fee, the required reply must include payment of the publication fee.

(2) the petition fee as set forth in 37 CFR 1.17(m);

(3) a statement that the entire delay in filing the required reply from the due date for the reply until the filing of a grantable petition pursuant to 37 CFR 1.137(b) was unintentional. The Commissioner may required additional information where there is a question whether the delay was unintentional; and

(4) any terminal disclaimer (and fee as set forth in 37 CFR 1.20(d)) required pursuant to 37 CFR 1.137(c)).

UNITED STATES PATENT AND TRADEMARK OFFICE

Commissioner for Patents
United States Patent and Trademark Office
P.O. Box 1450
Alexandria, VA 22313-1450
www.uspto.gov

ZILKA-KOTAB, PC
P.O. BOX 721120
SAN JOSE, CA 95172-1120

COPY MAILED

MAR 3 1 2008

In re Application of	:	
FRAZIER, Douglas	:	
Application No. 10/155,417	:	DECISION ON PETITION
Filed: May 22, 2002	:	TO WITHDRAW
Attorney Docket No. **273/245**	:	FROM RECORD
	:	

This is a decision on the Request to Withdraw as attorney or agent of record under 37 C.F.R. § 1.36(b), filed January 15, 2008.

The request is **NOT APPROVED** as moot.

A review of the file record indicates that the power of attorney to ZILKA-KOTAB, PC has been revoked by the assignee of the patent application on February 27, 2008. Accordingly, the request to withdraw under 37 C.F.R. § 1.36(b) is moot.

All future communications from the Office will continue to be directed to the below-listed address until otherwise notified by applicant.

Telephone inquires concerning this decision should be directed to Tredelle Jackson at 571-272-2783.

Tredelle D. Jackson
Petitions Examiner
Office of Petitions

cc: **GREENBERG TRAURIG LLP (LA)**
2450 COLORADO AVENUE, SUITE 400E
INTELLECTUAL PROPERTY DEPARTMENT
SANTA MONICA CA 90404

UNITED STATES PATENT AND TRADEMARK OFFICE

Commissioner for Patents
United States Patent and Trademark Office
P.O. Box 1450
Alexandria, VA 22313-1450
www.uspto.gov

PPG INDUSTRIES, INC.
ONE PPG PLACE
PITTSBURGH, PA 15272

COPY MAILED
APR 2 0 2006
OFFICE OF PETITIONS

In re Application of	:
Narayan K. Raman et al	:
Application No. 10/155,446	: DECISION GRANTING PETITION
Filed: May 24, 2002	: UNDER 37 CFR 1.313(c)(2)
Attorney Docket No. 1759A1	:

This is a decision on the petition, filed April 18, 2006, under 37 CFR 1.313(c)(2) to withdraw the above-identified application from issue after payment of the issue fee.

The petition is **GRANTED**.

The above-identified application is withdrawn from issue for consideration of a submission under 37 CFR 1.114 (request for continued examination). See 37 CFR 1.313(c)(2).

Petitioner is advised that the issue fee paid on March 23, 2006 in the above-identified application cannot be refunded. If, however, the above-identified application is again allowed, petitioner may request that it be applied towards the issue fee required by the new Notice of Allowance.[1]

Telephone inquiries should be directed to the undersigned at (571) 272-3218.

This matter is being referred to Technology Center AU 1754 for processing of the request for continued examination under 37 CFR 1.114 and for consideration of the Information Disclosure Statement.

Frances Hicks
Petitions Examiner
Office of Petitions

C:\Documents and Settings\FHicks\My Documents\470\Apr9\155446.wpd

---

[1] *The request to apply the issue fee to the new Notice may be satisfied by completing and returning the new Part B – Fee(s) Transmittal Form (along with any balance due at the time of submission), which includes the following language thereon: "The Director of the USPTO is requested to apply the Issue Fee and Publication Fee (if any) or to re-apply any previously paid issue fee in the application identified above. Petitioner is advised that, whether a fee is indicated as being due or not, the Issue Fee Transmittal Form* ***must*** *be completed and timely submitted to avoid abandonment. Note the language in bold text on the first page of the Notice of Allowance and Fee(s) Due (PTOL-85).*

Under the Paperwork Reduction Act of 1995, no persons are required to respond to a collection of information unless it displays valid OMB control number.

PETITION TO ACCEPT UNINTENTIONALLY DELAYED PAYMENT OF MAINTENANCE FEE IN AN EXPIRED PATENT (37 CFR 1.378(c))

Patent Number	Issue Date (YYYY-MM-DD)	Application Number	Filing Date (YYYY-MM-DD)	Docket Number (if applicable)
6711957	2004-03-30	10155484	2002-05-24	

CAUTION: Maintenance fee (and surcharge, if any) payment must correctly identify: (1) the patent number and (2) the application number of the actual U.S. application leading to issuance of that patent to ensure the fee(s) is/are associated with the correct patent. 37 CFR 1.366(c) and (d).

SMALL ENTITY
☒ Patentee claims, or has previously claimed, small entity status. See 37 CFR 1.27.

LOSS OF ENTITLEMENT TO SMALL ENTITY STATUS
☐ Patentee is no longer entitled to small entity status. See 37 CFR 1.27(g)

NOT Small Entity		Small Entity	
Fee	Code	Fee	Code
○ 3 ½ year	(1551)	◉ 3 ½ year	(2551)
○ 7 ½ year	(1552)	○ 7 ½ year	(2552)
○ 11 ½ year	(1553)	○ 11 ½ year	(2553)

SURCHARGE
The surcharge required by 37 CFR 1.20(i)(2) (Fee Code 1558) must be paid as a condition of accepting unintentionally delayed payment of the maintenance fee.

MAINTENANCE FEE (37 CFR 1.20(e)-(g))
The appropriate maintenance fee must be submitted with this petition.

STATEMENT
THE UNDERSIGNED CERTIFIES THAT THE DELAY IN PAYMENT OF THE MAINTENANCE FEE TO THIS PATENT WAS UNINTENTIONAL

PETITIONER(S) REQUEST THAT THE DELAYED PAYMENT OF THE MAINTENANCE FEE BE ACCEPTED AND THE PATENT REINSTATED

THIS PORTION MUST BE COMPLETED BY THE SIGNATORY OR SIGNATORIES

37 CFR 1.378(d) states: "Any petition under this section must be signed by an attorney or agent registered to practice before the Patent and Trademark Office, or by the patentee, the assignee, or other party in interest."

I certify, in accordance with 37 CFR 1.4(d)(4) that I am

○ An attorney or agent registered to practice before the Patent and Trademark Office

○ A sole patentee

◉ A joint patentee; I certify that I am authorized to sign this submission on behalf of all the other patentees.

○ A joint patentee; all of whom are signing this e-petition

○ The assignee of record of the entire interest

A Joint Patentee and I certify that I am authorized to sign this submission on behalf of all the other patentees			
A signature of the applicant or representative is required in accordance with 37 CFR 1.33 and 10.18. Please see 37 CFR 1.4(d) for the form of the signature.			
Signature	/D Fred Martinez/	Date (YYYY-MM-DD)	2008-05-20
Name	David Frederick Martinez		

This collection of information is required by 37 CFR 1.378(c). The information is required to obtain or retain a benefit by the public which is to file (and by the USPTO to process) an application. Confidentiality is governed by 35 U.S.C. 122 and 37 CFR 1.11 and 1.14. This collection is estimated to take 1 hour to complete, including gathering, preparing, and submitting the completed application form to the USPTO. Time will vary depending upon the individual case. Any comments on the amount of time you require to complete this form and/ or suggestions for reducing this burden, should be sent to the Chief Information Officer, U.S. Patent and Trademark Office, U.S. Department of Commerce, P.O. Box 1450, Alexandria, VA 22313-1450. DO NOT SEND FEES OR COMPLETED FORMS TO THIS ADDRESS. **This form can only be used when in conjunction with EFS-Web. If this form is mailed to the USPTO, it may cause delays in reinstating the patent.**

Privacy Act Statement

The Privacy Act of 1974 (P.L. 93-579) requires that you be given certain information in connection with your submission of the attached form related to a patent application or patent. Accordingly, pursuant to the requirements of the Act, please be advised that: (1) the general authority for the collection of this information is 35 U.S.C. 2(b)(2); (2) furnishing of the information solicited is voluntary; and (3) the principal purpose for which the information is used by the U.S. Patent and Trademark Office is to process and/or examine your submission related to a patent application or patent. If you do not furnish the requested information, the U.S. Patent and Trademark Office may not be able to process and/or examine your submission, which may result in termination of proceedings or abandonment of the application or expiration of the patent.

The information provided by you in this form will be subject to the following routine uses:

1. The information on this form will be treated confidentially to the extent allowed under the Freedom of Information Act (5 U.S.C. 552) and the Privacy Act (5 U.S.C. 552a). Records from this system of records may be disclosed to the Department of Justice to determine whether the Freedom of Information Act requires disclosure of these record s.

2. A record from this system of records may be disclosed, as a routine use, in the course of presenting evidence to a court, magistrate, or administrative tribunal, including disclosures to opposing counsel in the course of settlement negotiations.

3. A record in this system of records may be disclosed, as a routine use, to a Member of Congress submitting a request involving an individual, to whom the record pertains, when the individual has requested assistance from the Member with respect to the subject matter of the record.

4. A record in this system of records may be disclosed, as a routine use, to a contractor of the Agency having need for the information in order to perform a contract. Recipients of information shall be required to comply with the requirements of the Privacy Act of 1974, as amended, pursuant to 5 U.S.C. 552a(m).

5. A record related to an International Application filed under the Patent Cooperation Treaty in this system of records may be disclosed, as a routine use, to the International Bureau of the World Intellectual Property Organization, pursuant to the Patent Cooperation Treaty.

6. A record in this system of records may be disclosed, as a routine use, to another federal agency for purposes of National Security review (35 U.S.C. 181) and for review pursuant to the Atomic Energy Act (42 U.S.C. 218(c)).

7. A record from this system of records may be disclosed, as a routine use, to the Administrator, General Services, or his/her designee, during an inspection of records conducted by GSA as part of that agency's responsibility to recommend improvements in records management practices and programs, under authority of 44 U.S.C. 2904 and 2906. Such disclosure shall be made in accordance with the GSA regulations governing inspection of records for this purpose, and any other relevant (i.e., GSA or Commerce) directive. Such disclosure shall not be used to make determinations about individuals.

8. A record from this system of records may be disclosed, as a routine use, to the public after either publication of the application pursuant to 35 U.S.C. 122(b) or issuance of a patent pursuant to 35 U.S.C. 151. Further, a record may be disclosed, subject to the limitations of 37 CFR 1.14, as a routine use, to the public if the record was filed in an application which became abandoned or in which the proceedings were terminated and which application is referenced by either a published application, an application open to public inspections or an issued patent.

9. A record from this system of records may be disclosed, as a routine use, to a Federal, State, or local law enforcement agency, if the USPTO becomes aware of a violation or potential violation of law or regulation.

UNITED STATES PATENT AND TRADEMARK OFFICE

Commissioner for Patents
United States Patent and Trademark Office
P.O. Box 1450
Alexandria, VA 22313-1450
www.uspto.gov

In re Patent No. 6711957
Issue Date: March 30,2004
Application No. 10155484
Filed: May 24,2002
Attorney Docket No.

:

:DECISION GRANTING PETITION
:UNDER 37 CFR 1.378(c)

:

This is a decision on the electronic petition, filed May 20,2008 ,under 37 CFR 1.378(c) to accept the unintentionally delayed payment of the 3.5 year maintenance fee for the above-identified patent.

The petition is GRANTED.

The maintenance fee is accepted, and the above-identified patent reinstated as of May 20,2008 . This decision also constitutes notice that the fee has been accepted. An electronic copy of the petition and this decision has been created as an entry in an Image File Wrapper. Nevertheless, petitioner should print and retain an independent copy

Telephone inquires related to this electronic decision should be directed to the Electronic Business Center at 1-866-217-9197.

UNITED STATES PATENT AND TRADEMARK OFFICE

Commissioner for Patents
United States Patent and Trademark Office
P.O. Box 1450
Alexandria, VA 22313-1450
www.uspto.gov

Paper No. 16

STEPHEN C. DURANT
MORRISON & FOERSTER LLP
425 MARKET ST.
SAN FRANCISCO, CA 94105-2482

COPY MAILED
FEB 13 2004
OFFICE OF PETITIONS

In re Application of
Sung-Mo Kang, et al.
Application No. 10/155,490
Filed: May 22, 2002
Attorney Docket No. 416272004200

ON PETITION

This is a decision on the petition under 37 CFR 1.313(c)(2), filed February 13, 2004, to withdraw the above-identified application from issue after payment of the issue fee.

The petition is **GRANTED**.

The above-identified application is withdrawn from issue for consideration of a submission under 37 CFR 1.114 (request for continued examination). See 37 CFR 1.313(c)(2).

Petitioner is advised that the issue fee paid on November 3, 2003, in the above-identified application cannot be refunded. If, however, the above-identified application is again allowed, petitioner may request that it be applied towards the issue fee required by the new Notice of Allowance.

Telephone inquiries relating to this decision should be directed to the undersigned at (703) 305-9220.

After the application is received in the Office of Petitions, the file will be forwarded to Technology Center AU 2816 for further processing of the request for continued examination under 37 CFR 1.114.

Sherry D. Brinkley
Petitions Examiner
Office of Petitions
Office of the Deputy Commissioner
for Patent Examination Policy

[1]The request to apply the issue fee to the new Notice may be satisfied by completing and returning the new Issue Fee Transmittal Form PTOL-85(b), which includes the following language thereon: "Commissioner for Patents is requested to apply the Issue Fee and Publication Fee (if any) or re-apply any previously paid issue fee to the application identified above." Petitioner is advised that, whether a fee is indicated as being due or not, the Issue Fee Transmittal Form **must** be completed and timely submitted to avoid abandonment. Note the language in bold text on the first page of the Notice of Allowance and Fee(s) Due (PTOL-85).

UNITED STATES PATENT AND TRADEMARK OFFICE

COMMISSIONER FOR PATENTS
UNITED STATES PATENT AND TRADEMARK OFFICE
P.O. BOX 1450
ALEXANDRIA, VA 22313-1450
www.uspto.gov

Paper No. 25

Stephen C. Durant
Morrison & Foerster LLP
425 Market St.
San Francisco, CA 94105-2482

COPY MAILED
AUG 17 2004
OFFICE OF PETITIONS

In re Application of
Sung-Mo Kang, et al. :
Application No. 10/155,490 : ON PETITION
Filed: May 22, 2002 :
Attorney Docket No. 416272004200 :

This is a decision on the petition under 37 CFR 1.313(c)(2) to withdraw the above-identified application from issue after payment of the issue fee, filed August 17, 2004.

The petition is **GRANTED**.

The above-identified application is withdrawn from issue for consideration of a submission under 37 CFR 1.114 (request for continued examination). See 37 CFR 1.313(c)(2).

Petitioner is advised that the issue fee paid in the above-identified application cannot be refunded. If, however, the above-identified application is again allowed, petitioner may request that it be applied towards the issue fee required by the new Notice of Allowance. [1]

Telephone inquiries relating to this decision should be directed to the undersigned at (703) 305-9220.

After the application is received in the Office of Petitions, the file will be forwarded to Technology Center AU 2816 for further processing of the request for continued examination under 37 CFR 1.114 and for consideration of the concurrently filed amendment and IDS.

Sherry D. Brinkley
Petitions Examiner
Office of Petitions
Office of the Deputy Commissioner
for Patent Examination Policy

[1]The request to apply the issue fee to the new Notice may be satisfied by completing and returning the new Issue Fee Transmittal Form PTOL-85(b), which includes the following language thereon: "Commissioner for Patents is requested to apply the Issue Fee and Publication Fee (if any) or re-apply any previously paid issue fee to the application identified above." Petitioner is advised that, whether a fee is indicated as being due or not, the Issue Fee Transmittal Form **must** be completed and timely submitted to avoid abandonment. Note the language in bold text on the first page of the Notice of Allowance and Fee(s) Due (PTOL-85).

UNITED STATES PATENT AND TRADEMARK OFFICE

Commissioner for Patents
United States Patent and Trademark Office
P.O. Box 1450
Alexandria, VA 22313-1450
www.uspto.gov

PHILIP S. JOHNSON
JOHNSON & JOHNSON
ONE JOHNSON & JOHNSON PLAZA
NEW BRUNSWICK, NJ 08933-7003

COPY MAILED

MAY 19 2005

OFFICE OF PETITIONS

In re Application of :
Rama Rao V. Gundlapalli et al :
Application No. 10/155,568 : ON PETITION
Filed: May 24, 2002 :
Attorney Docket No. DEP678 :

This is a decision on the petition under 37 CFR 1.173(b), filed April 25, 2005, to revive the above-identified application.

The petition is **GRANTED.**

The above-identified application became abandoned for failure to reply in a timely manner to the Notice of Non-Compliant Amendment (37 CFR 1.121(Notice)) mailed July 7, 2004. The Notice set a period for reply of one (1) month from the mail date of the Notice. No extensions of time under the provisions of 37 CFR 1.136(a) were obtained. Accordingly, the above-identified application became abandoned on August 8, 2004.

Telephone inquiries concerning this decision should be directed to Wan Laymon at (571) 272-3220.

This matter is being referred to Technology Center AU 3738.

Wan Laymon

Wan Laymon
Petitions Examiner
Office of Petitions
Office of the Deputy Commissioner
for Patent Examination Policy

UNITED STATES PATENT AND TRADEMARK OFFICE

COMMISSIONER FOR PATENTS
UNITED STATES PATENT AND TRADEMARK OFFICE
WASHINGTON, D.C. 20231
www.uspto.gov

Paper No. 5

COPY MAILED

APR 2 3 2003

OFFICE OF PETITIONS

YOUNG LAW FIRM
A PROFESSIONAL CORPORATION
4370 ALPINE ROAD SUITE 106
PORTOLA VALLEY, CA 94028

In re Application of :
Lee, et al. :
Application No. 10/155,570 :
Filed: May 22, 2002 :
Attorney Docket No. RUBI5710 :
For: METHODS AND SYSTEMS FOR IN :
SITU TISSUE MARKING AND ORIENTATION:
STABILIZATION :

DECISION GRANTING STATUS
UNDER 37 CFR 1.47(a)

This is in response to the petition under 37 CFR 1.47(a), filed October 15, 2002.

The petition is **GRANTED**.

Petitioner has shown that inventor Roberta Lee has refused to join in the filing of the above-identified application after having been presented with the application papers.

The above-identified application and papers have been reviewed and found in compliance with 37 CFR 1.47(a). This application is hereby accorded Rule 1.47(a) status.

As provided in Rule 1.47(c), this Office will forward notice of this application's filing to the non-signing inventor at the address given in the petition. Notice of the filing of this application will also be published in the Official Gazette.

After this decision is mailed, the above-identified application will be returned to the Office of Initial Patent Examination for further processing.

Telephone inquiries related to this decision may be directed to the undersigned at (703) 305-0310.

Alesia M. Brown
Petitions Attorney
Office of Petitions
Office of the Deputy Commissioner
for Patent Examination Policy

UNITED STATES PATENT AND TRADEMARK OFFICE

COMMISSIONER FOR PATENTS
UNITED STATES PATENT AND TRADEMARK OFFICE
WASHINGTON, D.C. 20231
www.uspto.gov

ROBERT LEE
1017 EL CAMINO REAL
PMB 361
REDWOOD CITY, CA 94063

COPY MAILED

APR 2 3 2003

OFFICE OF PETITIONS

In re Application of :
Lee, et al. :
Application No. 10/155,570 : LETTER
Filed: May 22, 2002 :
Attorney Docket No. RUBI5710 :
For: METHODS AND SYSTEMS FOR IN :
SITU TISSUE MARKING AND ORIENTATION:
STABILIZATION :

Dear Madam:

You are named as an inventor in the above-identified United States patent application filed under the provisions of 35 U.S.C. 116 (United States Code) and 37 C.F.R. § 1.47(a), Rules of Practice in Patent Cases. Should a patent be granted on the application you will be designated therein as a joint inventor.

As a named inventor you are entitled to inspect any paper in the file wrapper of the application, order copies of all or any part thereof (at a prepaid cost as per 37 C.F.R. § 1.19) or make your position of record in the application. Alternatively, you may arrange to do any of the preceding through a registered patent attorney or agent presenting written authorization from you. If you care to join the application, counsel of record (see below) would presumably assist you. Joining in the application would entail the filing of an appropriate oath or declaration by you pursuant to 37 C.F.R. § 1.63.

Telephone inquiries regarding this communication should be directed to the undersigned at (703) 305-0310. Requests for information regarding your application should be directed to the File Information Unit at (703) 308-2733. Information regarding how to pay for and order a copy of the application, or a specific paper in the application, should be directed to Certification Division at (703) 308-9726 or 1-800-972-6382 (outside the Washington D.C. area).

Alesia M. Brown
Petitions Attorney
Office of Petitions
Office of the Deputy Commissioner
for Patent Examination Policy

OIPE JC35 SEP 0 4 2002 PATENT & TRADEMARK OFFICE

COPY OF PAPERS ORIGINALLY FILED

UNITED STATES PATENT AND TRADEMARK OFFICE

COMMISSIONER FOR PATENTS
UNITED STATES PATENT AND TRADEMARK OFFICE
WASHINGTON, D.C. 20231
www.uspto.gov

APPLICATION NUMBER	FILING/RECEIPT DATE	FIRST NAMED APPLICANT	ATTORNEY DOCKET NUMBER
10/155,571	05/24/2002	Dennis L. Rimmel	AGT 2 0042

Timothy E. Nauman, Esq.
Fay, Sharpe, Fagan,
Minnich & McKee, LLP, 7th Floor
1100 Superior Avenue
Cleveland, OH 44114-2518

RECEIVED
JUL 0 8 2002
FAY, SHARPE, FAGAN,
MINNICH & McKEE, LLP

CONFIRMATION NO. 4661
FORMALITIES LETTER
OC000000008370023

Date Mailed: 06/28/2002

NOTICE OF OMITTED ITEM(S) IN A NONPROVISIONAL APPLICATION

FILED UNDER 37 CFR 1.53(b)

A filing date has been accorded to the above-identified nonprovisional application papers; however, the following item(s) appear to have been omitted from the application:

- Figure(s) **Figure 3N** described in the specification.

I. Should applicant contend that the above-noted omitted item(s) was in fact deposited in the U.S. Patent and Trademark Office (USPTO) with the nonprovisional application papers, a copy of this Notice and a petition (and $130.00 petition fee *(37 CFR 1.17(h))*) with evidence of such deposit **must** be filed within **TWO MONTHS** of the date of this Notice. The petition fee will be refunded if is determined that the item(s) was received by the USPTO.

II. Should applicant desire to supply the omitted item(s) and accept the date that such omitted item(s) was filed in the USPTO as the filing date of the above-identified application, a copy of this Notice, the omitted item(s) (with a supplemental oath or declaration in compliance with 37 CFR 1.63 and 1.64 referring to such items), and a petition under 37 CFR 1.182 (with the $130.00 petition fee *(37 CFR 1.17(h))* requesting the later filing date **must** be filed within **TWO MONTHS** of the date of this Notice.

III. The failure to file a petition (and petition fee) under the above options (I) or (II) within **TWO MONTHS** of the date of this Notice (37 CFR 1.181(f)) will be treated as a constructive acceptance by the applicant of the application as deposited in the USPTO. **THIS TWO MONTH PERIOD IS NOT EXTENDABLE UNDER 37 CFR 1.136(a) or (b)**. In the absence of a timely filed petition in reply to this Notice, the application will maintain a filing date as of the date of deposit of the application papers in the USPTO, and original application papers (*i.e.*, the original disclosure of the invention) will include only those application papers present in the USPTO on the date of deposit.

In the event that applicant elects not to take action pursuant to options (I) or (II) above (thereby constructively electing option (III)), amendment of the specification to renumber the pages consecutively and cancel incomplete sentences caused by any omitted page(s), and/or amendment of the specification to cancel all references to any omitted drawing(s), relabel the drawing figures to be numbered consecutively (if necessary), and correct the references in the specification to the drawing figures to correspond with any relabelled drawing figures, is required. Any drawing changes should be accompanied by a copy of the drawing figures showing the proposed changes in red ink. Such amendment and/or correction to the drawing figures, if necessary, should be by way of preliminary amendment submitted prior to the first Office action to avoid delays in the prosecution of the application.

A copy of this notice MUST be returned with the reply.

Customer Service Center
Initial Patent Examination Division (703) 308-1202
PART I - ATTORNEY/APPLICANT COPY

COPY OF PAPERS
ORIGINALLY FILED

UNITED STATES PATENT AND TRADEMARK OFFICE

COMMISSIONER FOR PATENTS
UNITED STATES PATENT AND TRADEMARK OFFICE
P.O. BOX 1450
ALEXANDRIA, VA 22313-1450
www.uspto.gov

td

Mailed: OCT - 7 2003 Paper Number: 12

In re application of
Ted Massa et al.
Serial No. 10/155,572
Filed: May 24, 2002
For: SUPERHARD MATERIAL ARTICLE OF MANUFACTURE

DECISION ON PETITION

This is a decision on the PETITION UNDER 37 CFR 1.181 TO WITHDRAW THE FINALITY OF THE OFFICE ACTION mailed February 24, 2003.

On December 2, 2002, a first office action was mailed , rejecting all of the claims present in the application. Applicants responded to this office action with a response filed on January 21, 2003. A final rejection was then mailed February 24, 2003. An interview was conducted on March 28, 2003 and an amendment after final was filed on April 14, 2003. It is noted that applicants requested the withdrawal of finality in conjunction with this amendment. An advisory action was mailed in response to said amendment on April 22, 2003. Applicants filed a notice of appeal on May 12, 2003.

On May 27, 2003, the instant petition under 37 CFR 1.181 was timely filed to formally request the withdrawal of finality of the February 24, 2003 office action.

Applicant's position for the withdrawal of finality is that clear issues have not been developed between the examiner and Applicants. It is therefore the position of Applicants that the finality of the office action is premature.

DECISION

Section 706.07 of the MPEP states:

Before final rejection is in order a clear issue should be developed between the examiner and applicant. To bring the prosecution to as speedy conclusion as possible and at the same time to deal justly by both the applicant and the public, the invention as disclosed and claimed should be thoroughly searched in the first action and the references

fully applied; and in reply to this action the applicant should amend with a view to avoiding all the grounds of rejection and objection. Switching from one subject matter to another in the claims presented by applicant in successive amendments, or from one set of references to another by the examiner in rejecting in successive actions claims of substantially the same subject matter, will alike tend to defeat attaining the goal of reaching a clearly defined issue for an early termination, i.e., either an allowance of the application or a final rejection.

The claims as originally filed were directed to a "superhard material." This material is defined in the specification to mean two distinct materials (see page 5, line 16 – page 6, line 11). The specification teaches that chemical vapor deposited diamond is not included in the definition of "superhard material." The examiner rejected the claims over two references in a first office action. The references were both directed to CVD diamond. In response to the office action, applicants pointed out this deficiency and again pointed to the definition of "superhard material" found in the instant specification to overcome the references. The examiner withdrew one of the rejections but maintained the rejection over Obata et al. It was the examiner's position that applicants must come in with a showing that the instant claims show an unexpected advantage over a CVD diamond (see page 4, lines 10-16 of the final office action). This was an improper burden shift by the examiner. The instant specification clearly defined what is meant by the term "superhard material" and the CVD diamond of the prior art is excluded from this definition. No comparison was needed because the prior art clearly does not teach the instantly claimed material.

During the interview held March 28, 2003, the examiner appears to have come to the same conclusion that the prior art does not meet the instantly claimed materials. However, at that time, the examiner required applicants to incorporate the definition of "superhard material" into the claims. It was additionally pointed out that if such an incorporation were made, the rejection would be overcome, but a further search and/or consideration would be required. Applicants presented such an amendment in the response to the final rejection and the examiner refused to enter the amendment on the grounds that it would be a new issue. This was also clearly improper. Not only was it unnecessary for applicants to amend the claims in such a manner as suggested by the examiner, it was improper to refuse entry of the amendment because the scope of the claims were not changed by the amendment in question. All that the amendment did, was to write out the inherent definition of "superhard material." The scope of the claim was unchanged.

It appears that the examiner did not interpret the claims in light of the specification until after the final rejection. Therefore, no clear issue has been established between the examiner and applicants as required by MPEP Section 706.07 above. Accordingly, the petition to withdraw the finality of the office action is **GRANTED**.

The application is being forwarded to the examine to prepare a new non-final office action. All amendments that have been submitted will be entered and considered. In addition, the examiner should take care to interpret the claims in light of the definitions provided by the specification.

JMStone

Jacqueline M. Stone, Director
Technology Center 1700
Chemical and Materials Engineering

KENNAMETAL INC.
1600 TECHNOLOGY WAY
P. O. BOX 231
LATROBE PA 15650-0231

UNITED STATES PATENT AND TRADEMARK OFFICE

Commissioner for Patents
United States Patent and Trademark Office
P.O. Box 1450
Alexandria, VA 22313-1450
www.uspto.gov

ROBERTS, MARDULA & WERTHEIM, LLC
11800 SUNRISE VALLEY DRIVE
SUITE 1000
RESTON VA 20191

COPY MAILED
AUG 25 2006
OFFICE OF PETITIONS

In re Application of	:	
Weinstein, et al.	:	
Application No. 10/155,582	:	DECISION ON PETITION
Filed: May 23, 2002	:	TO WITHDRAW
Attorney Docket No. 2708-001	:	FROM RECORD
	:	

This is a decision on the Request to Withdraw as attorney or agent of record under 37 C.F.R. § 1.36(b), filed May 11, 2006.

The request is **NOT APPROVED**.

A grantable request to withdraw as attorney/agent of record must be signed by every attorney/agent seeking to withdraw or contain a clear indication that one attorney is signing on behalf of another/others. A request to withdraw will not be approved unless at least 30 (thirty) days would remain between the date of approval and the later of the expiration date of a time to file a response or the expiration date of the maximum time period which can be extended under 37 C.F.R. § 1.136(a).

The Office cannot approve the request at this time since the reasons provided do not meet any of the conditions under the mandatory or permissive categories enumerated in 37 CFR 10.40. Section 10.40 of Title 37 of the Code of Federal Regulation states, "[a] practitioner shall not withdraw from employment in a proceeding before the Office without permission from the Office[.]" More specifically, 37 CFR 10.40 states, "[i]f paragraph (b) of this section is not applicable, a practitioner may not request permission to withdraw in matter pending before the Office unless such request or such withdrawal is" for one the permissive reasons listed in 37 CFR 10.40(c). The reasons set forth in the request, client failed to remit payment for services rendered and all fees due are paid to date, meet any the conditions set forth in 37 CFR 10.40, but the attorney is unclear whether the client is still withholding payment for services rendered. Furthermore it is unclear if the client is still unresponsive to your attempts at communication since all fees are paid to date.

All future communications from the Office will continue to be directed to the above-listed address until otherwise notified by applicant.

Telephone inquiries concerning this decision should be directed to April Wise at 571-272-1642.

April M. Wise
Petitions Examiner
Office of Petitions

cc: Allan Weinstein, M.D.
9205 Pegasus Court
Potomac, MD 20854

UNITED STATES PATENT AND TRADEMARK OFFICE

Commissioner for Patents
United States Patent and Trademark Office
P.O. Box 1450
Alexandria, VA 22313-1450
www.uspto.gov

TOWNSEND AND TOWNSEND AND CREW, LLP
TWO EMBARCADERO CENTER
EIGHTH FLOOR
SAN FRANCISCO, CA 94111-3834

COPY MAILED

FEB 13 2006

OFFICE OF PETITIONS

In re Application of	:	
Tassie Collins et al	:	
Application No. 10/155,605	:	DECISION ON PETITION
Filed: May 22, 2002	:	TO WITHDRAW
Attorney Docket No. T01-010-2	:	FROM RECORD
	:	

This is a decision on the Request to Withdraw as attorney or agent of record under 37 C.F.R. § 1.36(b), filed August 4, 2005.

The request is **APPROVED**.

A grantable request to withdraw as attorney/agent of record must be signed by every attorney/agent seeking to withdraw or contain a clear indication that one attorney is signing on behalf of another/others. A request to withdraw will not be approved unless at least 30 (thirty) days would remain between the date of approval and the later of the expiration date of a time to file a response or the expiration date of the maximum time period which can be extended under 37 C.F.R. § 1.136(a).

The request was signed by William B. Kezer on behalf of all attorneys of record who are associated with customer No. 20350. Applicant is reminded that there is no attorney of record at this time.

The correspondence address of record has been changed and the new correspondence address is the address indicated below.

Telephone inquiries concerning this decision should be directed to Irvin Dingle at (571) 272-3210.

Amelia Au
Petitions Examiner
Office of Petitions

cc: Jones Day LLP
2882 Sand Hill Road, Suite 240
Menlo Park, CA 94025

UNITED STATES PATENT AND TRADEMARK OFFICE

Commissioner for Patents
United States Patent and Trademark Office
P.O. Box 1450
Alexandria, VA 22313-1450
www.uspto.gov

Glenn Patent Group
3475 Edison Way, Suite L
Menlo Park, CA 94025

COPY MAILED
SEP 19 2008

In re Application of	:	
Steve Mansour	:	
Application No. 10/155,625	:	DECISION ON PETITION
Filed: May 23, 2002	:	TO WITHDRAW
Attorney Docket No. AOL0029	:	FROM RECORD
	:	

This is a decision on the Request to Withdraw as attorney or agent of record under 37 C.F.R. § 1.36(b), filed September 15, 2008.

The request is **APPROVED**.

A grantable request to withdraw as attorney/agent of record must be signed by every attorney/agent seeking to withdraw or contain a clear indication that one attorney is signing on behalf of another/others. A request to withdraw will not be approved unless at least 30 (thirty) days would remain between the date of approval and the later of the expiration date of a time to file a response or the expiration date of the maximum time period which can be extended under 37 C.F.R. § 1.136(a).

The request was signed by Michael A. Glenn on behalf of all attorneys of record. All attorneys/agents have been withdrawn. Applicant is reminded that there is no attorney of record at this time.

The request to change the correspondence of record is not acceptable as the requested correspondence address is not that of: (1) the first named signing inventor; or (2) an intervening assignee of the entire interest under 37 C.F.R 3.71. All future communications from the Office will be directed to the first named signing inventor at the first copied address below until otherwise properly notified by the applicant.

There is an outstanding Office action mailed April 17, 2008 that requires a reply from the applicant.

Telephone inquiries concerning this decision should be directed to Terri Williams at 571-272-2991.

Terri Williams
Petitions Examiner
Office of Petitions

cc: **Steve Mansour**
2215 Wellington Drive
Milpitas, CA 95035

cc: **AOL LLC**
22000 AOL Way
A Delaware Limited Liability Company
Dulles, VA 20166-9323

UNITED STATES PATENT AND TRADEMARK OFFICE

UNITED STATES DEPARTMENT OF COMMERCE
United States Patent and Trademark Office
Address: COMMISSIONER FOR PATENTS
P.O. Box 1450
Alexandria, Virginia 22313-1450
www.uspto.gov

APPLICATION NUMBER	FILING OR 371(C) DATE	FIRST NAMED APPLICANT	ATTY. DOCKET NO./TITLE
10/155,625	05/23/2002	Steve Mansour	AOL0029

CONFIRMATION NO. 4614

POWER OF ATTORNEY NOTICE

22862
GLENN PATENT GROUP
3475 EDISON WAY, SUITE L
MENLO PARK, CA 94025

OC000000032168256

Date Mailed: 09/18/2008

NOTICE REGARDING CHANGE OF POWER OF ATTORNEY

This is in response to the Power of Attorney filed 09/15/2008.

- The withdrawal as attorney in this application has been accepted. Future correspondence will be mailed to the new address of record. 37 CFR 1.33.

/tswilliams/

Office of Data Management, Application Assistance Unit (571) 272-4000, or (571) 272-4200, or 1-888-786-0101

UNITED STATES PATENT AND TRADEMARK OFFICE

COMMISSIONER FOR PATENTS
UNITED STATES PATENT AND TRADEMARK OFFICE
P.O. BOX 1450
ALEXANDRIA, VA 22313-1450
WWW.USPTO.GOV

Paper No. 7

DOUGLAS L. WATHEN
GIFFORD, KRASS, GROH, SPRINKLE,
ANDERSON & CITKOWSKI, P.C.
280 N. OLD WOODWARD AVE., STE. 400
BIRMINGHAM, MI 48009

COPY MAILED

JUL 15 2003

OFFICE OF PETITIONS

In re Application of
David Meisel
Application No. 10/155,629
Filed: May 24, 2002
Attorney Docket No. MIA-10005/36

: DECISION ON PETITION
: UNDER 37 CFR 1.78(a)(6)

This is a decision on the petition under 37 CFR 1.78(a)(6), filed June 6, 2003, to accept an unintentionally delayed claim under 35 U.S.C. §119(e) for the benefit of the prior-filed provisional applications.

The petition is **Granted.**

A petition under 37 CFR 1.78(a)(6) is only applicable to those applications filed on or after November 29, 2000. Further, the petition is appropriate only after expiration of the period specified in 37 CFR 1.78(a)(5)(ii) and must be filed during the pendency of the nonprovisional application. In addition, the petition must be accompanied by:

(1) the surcharge set forth in 37 CFR 1.17(t);

(2) a statement that the entire delay between the date the claim was due under 37 CFR 1.78(a)(5)(ii) and the date the claim was filed was unintentional; and

(3) the reference to the prior-filed provisional application supplied in an application data sheet (ADS)(37 CFR 1.76) or as an amendment in the first sentence of the specification following the title. *See* 35 U.S.C. 119(e) and 37 CFR 1.78(a)(5)(iii). The Commissioner may require additional information where there is a question whether the delay was unintentional.

The instant pending nonprovisional application was filed on May 24, 2002. A reference to the prior-filed provisional applications has been included in an amendment to the first sentence of the specification following the title.

The instant nonprovisional application was filed after November 29, 2000, and the claim for priority herein is submitted after expiration of the period specified in 37 CFR 1.78(a)(5)(ii). Also, the reference to the prior-filed provisional applications was submitted during the pendency of the nonprovisional application for which the benefit is sought. *See* 35 U.S.C. §119(e). Accordingly, having found that the instant petition satisfies the conditions of 37 CFR 1.78(a)(6) for acceptance of an unintentionally delayed claim for priority under 35 U.S.C. §119(e), the petition to accept an unintentionally delayed claim of benefit to the prior-filed provisional applications is granted.

The granting of the petition to accept the delayed benefit claim to the prior provisional applications under 37 CFR 1.78(a)(6) should not be construed as meaning that the instant application is entitled to the benefit of the filing date of the prior provisional applications. In order for the instant application to be entitled to the benefit of the prior provisionals applications, all other requirements under 35 U.S.C. §119(e) and 37 CFR 1.78(a)(4) and (a)(5) must be met. Accordingly, the examiner will, in due course, consider this benefit claim and determine whether the instant application is entitled to the benefit of the earlier filing date.

A corrected Filing Receipt, which includes the priority claim to the prior-filed provisional applications, accompanies this decision on petition.

Any inquiries concerning this decision may be directed to Karen Creasy at (703) 305-8859.

The application is being forwarded to Technology Center AU 2837 for processing the amendment submitted June 6, 2003 and for consideration by the examiner of the claim under 35 U.S.C. §119(e) for the benefit of priority to the prior-filed provisional applications.

Frances Hicks

Frances Hicks
Lead Petitions Examiner
Office of Petitions
Office of the Deputy Commissioner
for Patent Examination Policy

ATTACHMENT: Corrected Filing Receipt

UNITED STATES PATENT AND TRADEMARK OFFICE

UNITED STATES DEPARTMENT OF COMMERCE
United States Patent and Trademark Office
Address: COMMISSIONER FOR PATENTS
P.O. Box 1450
Alexandria, Virginia 22313-1450
www.uspto.gov

Juan Carlos A. Marquez
c/o Stites & Harbison PLLC
1199 North Fairfax Street
Suite 900
Alexandria, VA 22314-1437

Mail Date: 04/21/2010

Applicant	: Shigeru Yatsuzuka	: DECISION ON REQUEST FOR
Patent Number	: 7599801	: RECALCULATION of PATENT
Issue Date	: 10/06/2009	: TERM ADJUSTMENT IN VIEW
Appliction No	: 10/155,631	: OF WYETH AND NOTICE OF INTENT TO
Filed	: 05/23/2002	: ISSUE CERTIFICATE OF CORRECTION
		:

The Request for Recalculation is **GRANTED** to the extent indicated.

The patent term adjustment has been determined to be **494** days. The USPTO will *sua sponte* issue a certificate of correction reflecting the amount of PTA days determined by the recalculation.

Prior to the issuance of the certificate of correction, the USPTO will afford patentee an opportunity to be heard and request reconsideration. Accordingly, patentee has **one month or thirty (30) days**, whichever is longer, to file a request for reconsideration of this patent term adjustment calculation. See 35 U.S.C. 154(b)(3)(B)(ii) and 37 CFR 1.322(a)(4). No extensions of time will be granted under 37 CFR 1.136.

Patentee should use document code PET.OP if electronically filing a request for reconsideration of this patent term adjustment calculation. The patentee must also include the information required by 37 CFR 1.705(b)(2) and the fee required by 37 CFR 1.18(e). If patentee does not file a timely request for reconsideration of this patent term adjustment calculation including the information required by 37 CFR 1.705(b)(2) and the fee required by 37 CFR 1.18(e), the USPTO will issue a certificate of correction reflecting the PTA determination noted above.

Patentee should be aware that in order to preserve the right to review in the United States District Court for the District of Columbia of the USPTO patent term adjustment determination, patentee must ensure that he or she also take the steps required under 35 U.S.C. 154(b)(4)(A) in a timely manner. Nothing in the request for recalculation should be construed as providing an alternative time frame for commencing a civil action under 35 U.S.C. 154(b)(4)(A).

Any questions concerning this decision should be directed to the Office of Patent Legal Administration at 571-272-7702.

UNITED STATES PATENT AND TRADEMARK OFFICE

Commissioner for Patents
United States Patent and Trademark Office
P.O. Box 1450
Alexandria, VA 22313-1450
www.uspto.gov

NOV 22 2004

In re Application of	:	
Amir Nourian	:	
Serial No. 10/155,644	:	DECISION ON PETITION
Filed: May 22, 2002	:	TO WITHDRAW AS ATTORNEY
For: BUSINESS CARE RETAINER	:	
SYSTEM	:	

By papers filed on September 21, 2004, counsel has petitioned to withdraw as attorney of record in this application.

The petition is GRANTED.

Applicant is advised that the correspondence address for this application is:

Amir H. Nourian
Frontline Imports
219 Via Marfino
San Clemente, CA 92673

E. Rollins-Cross, Director
Technology Center 3700

Michael S. Neustel
Neustel Law Offices, Ltd.
2534 South University Dr., Suite 4
Fargo, ND 58103

UNITED STATES PATENT AND TRADEMARK OFFICE

Commissioner for Patents
United States Patent and Trademark Office
P.O. Box 1450
Alexandria, VA 22313-1450
www.uspto.gov

MAIL

FROMMER LAWRENCE & HAUG
745 FIFTH AVENUE- 10TH FL.
NEW YORK NY 10151

OCT 11 2006
DIRECTOR OFFICE
TECHNOLOGY CENTER 2600

In re Application of
Lawrence Steven SALANT, et. al.
Application No. 10/155,655
Filed: May 24, 2002
For: **SURFACE MAPPING AND 3-D PARAMETRIC ANALYSIS**

DECISION ON PETITION
UNDER 37 CFR 1.59

This is a response to the petition under 37 CFR 1.59(b), filed July 13, 2006, to expunge information from the above identified application.

The decision on the petition will be held in abeyance until allowance of the application or mailing of an *Ex Parte Quayle* action or a Notice of Abandonment, at which time the petition will be decided.

Petitioner requests that the proprietary information consisting of software code, identified as exhibits 1-8, submitted on July 13, 2006, be expunged from the record. Petitioner states that the information contains trade secret material, proprietary material and/or material that is subject to a protective order which has not been made public, and the information has not otherwise been made public. The petition fee set forth in 37 CFR 1.17(h) has been paid.

The decision on the petition is held in abeyance because prosecution on the merits is not closed. Accordingly, it is not appropriate to make a final determination of whether or not the material requested to be expunged is "material", with "materiality" being defined as any information which the examiner considers as being important to a determination of patentability of the claims. Thus, the decision on the petition to expunge must be held in abeyance at this time.

During prosecution on the merits, the examiner will determine whether or not the identified document is considered to be "material". If the information is not considered by the examiner to be material, the information will be returned to applicant.

The document in question will not be available to the public during prosecution.

Krista Zele
Special Program Examiner
Technology Center 2600
Communications

UNITED STATES PATENT AND TRADEMARK OFFICE

OIPE IAP22
SEP 18 2007
PATENT & TRADEMARK OFFICE

Commissioner for Patents
United States Patent and Trademark Office
P.O. Box 1450
Alexandria, VA 22313-1450
www.uspto.gov

2006 OCT 14 A 11: 17

MAIL

FROMMER LAWRENCE & HAUG LLP

OCT 11 2006
DIRECTOR OFFICE
TECHNOLOGY CENTER 2600

FROMMER LAWRENCE & HAUG
745 FIFTH AVENUE- 10TH FL.
NEW YORK NY 10151

DOCKETED

In re Application of
Lawrence Steven SALANT, et. al.
Application No. 10/155,655
Filed: May 24, 2002
For: **SURFACE MAPPING AND 3-D PARAMETRIC ANALYSIS**

DECISION ON PETITION
UNDER 37 CFR 1.59

This is a response to the petition under 37 CFR 1.59(b), filed July 13, 2006, to expunge information from the above identified application.

The decision on the petition will be held in abeyance until allowance of the application or mailing of an *Ex Parte Quayle* action or a Notice of Abandonment, at which time the petition will be decided.

Petitioner requests that the proprietary information consisting of software code, identified as exhibits 1-8, submitted on July 13, 2006, be expunged from the record. Petitioner states that the information contains trade secret material, proprietary material and/or material that is subject to a protective order which has not been made public, and the information has not otherwise been made public. The petition fee set forth in 37 CFR 1.17(h) has been paid.

The decision on the petition is held in abeyance because prosecution on the merits is not closed. Accordingly, it is not appropriate to make a final determination of whether or not the material requested to be expunged is "material", with "materiality" being defined as any information which the examiner considers as being important to a determination of patentability of the claims. Thus, the decision on the petition to expunge must be held in abeyance at this time.

During prosecution on the merits, the examiner will determine whether or not the identified document is considered to be "material". If the information is not considered by the examiner to be material, the information will be returned to applicant.

The document in question will not be available to the public during prosecution.

Krista Zele
Special Program Examiner
Technology Center 2600
Communications

UNITED STATES PATENT AND TRADEMARK OFFICE

Commissioner for Patents
United States Patent and Trademark Office
P.O. Box 1450
Alexandria, VA 22313-1450
www.uspto.gov

BUCHANAN INGERSOLL LLP
(INCLUDING BURNS, DOANE, SWECKER & MATHIS)
P.O. BOX 1404
ALEXANDRIA, VA 22313-1404

COPY MAILED

MAY 18 2006

OFFICE OF PETITIONS

In re Application of	:	
Nanibhushan Dattagupta	:	
Application No. 10/155,666	:	DECISION ON PETITION
Filed: May 24, 2002	:	TO WITHDRAW
Attorney Docket No. 475412001200	:	FROM RECORD
	:	

This is a decision on the Request to Withdraw as attorney or agent of record under 37 C.F.R. § 1.36(b), filed August 17, 2005.

The request is **NOT APPROVED**.

A grantable request to withdraw as attorney/agent of record must be signed by every attorney/agent seeking to withdraw or contain a clear indication that one attorney is signing on behalf of another/others. A request to withdraw will not be approved unless at least 30 (thirty) days would remain between the date of approval and the later of the expiration date of a time to file a response or the expiration date of the maximum time period which can be extended under 37 C.F.R. § 1.136(a).

The request cannot be approved because 37 CFR 10.40 states, "[a] practitioner shall not withdraw from employment in a proceeding before the Office without permission from the Office[.]" Additionally, 37 CFR 10.40 states, "i[f] paragraph (b) of this section is not applicable, a practitioner may not request permission to withdraw in matters pending before the Office unless such request or such withdrawal is because: [. . .]" Reasons a practitioner can permissively withdraw follow the later quotation.

Since the request for withdrawal as attorney or agent submitted on August 17, 2005 provides no reasons for withdrawal, the Office cannot at this time determine whether practitioner's request is one of the mandatory or permissive reasons enumerated in 37 CFR 10.40. Any subsequent requests must include reasons for withdrawal. Please note that there is a space provided for on PTO/SB/83 (Request for Withdrawal as Attorney or Agent) to supply practitioner's reasons.

All future communications from the Office will continue to be directed to the above-listed address until otherwise notified by applicant.

Telephone inquiries concerning this decision should be directed to Irvin Dingle at 571-272-3210.

Denise Pothier
Petitions Examiner
Office of Petitions

cc: Joseph R. Baker, Jr.
Buchanan Ingersoll, L.L.P.
12230 El Camino Real
Suite 300
San Diego, CA 92130

cc: Dr. Nanibhushan Dattagupta
Applied Gene Technologies
6190 Cornerstone Court, East, Suite 101
San Diego, CA 92121

UNITED STATES PATENT AND TRADEMARK OFFICE

Commissioner for Patents
United States Patent and Trademark Office
P.O. Box 1450
Alexandria, VA 22313-1450
www.uspto.gov

BUCHANAN INGERSOLL & ROONEY LLP
P.O. BOX 1404
ALEXANDRIA, VA 22313-1404

COPY MAILED

AUG 27 2007

OFFICE OF PETITIONS

In re Application of	:	
Nanibhushan Dattagupta	:	
Application No. 10/155,666	:	DECISION ON PETITION
Filed: May 24, 2002	:	TO WITHDRAW
Attorney Docket No. 1034106-000008	:	FROM RECORD
	:	

This is a decision on the Request to Withdraw as attorney or agent of record under 37 C.F.R. § 1.36(b), filed May 31, 2006.

The request is **APPROVED**.

The request was signed by Joseph R. Baker, Jr. on behalf of all attorneys of record who are associated with customer No. 41790.

Applicant is reminded that there is no attorney of record at this time.

Telephone inquiries concerning this decision should be directed to Irvin Dingle at (571) 272-3210.

Irvin Dingle
Petitions Examiner
Office of Petitions

UNITED STATES PATENT AND TRADEMARK OFFICE

UNITED STATES DEPARTMENT OF COMMERCE
United States Patent and Trademark Office
Address: COMMISSIONER FOR PATENTS
P.O. Box 1450
Alexandria, Virginia 22313-1450
www.uspto.gov

APPLICATION NUMBER	FILING OR 371 (c) DATE	FIRST NAMED APPLICANT	ATTY. DOCKET NO./TITLE
10/155,666	05/24/2002	Nanibhushan Dattagupta	1034106-000008

CONFIRMATION NO. 5075

OC000000025555399

41790
BUCHANAN, INGERSOLL & ROONEY LLP
P.O. BOX 1404
ALEXANDRIA, VA 22313-1404

Date Mailed: 08/27/2007

NOTICE REGARDING CHANGE OF POWER OF ATTORNEY

This is in response to the Power of Attorney filed 05/31/2006.

- The withdrawal as attorney in this application has been accepted. Future correspondence will be mailed to the new address of record. 37 CFR 1.33.

Office of Initial Patent Examination (571) 272-4000, or 1-800-PTO-9199

FORMER ATTORNEY/AGENT COPY

UNITED STATES PATENT AND TRADEMARK OFFICE

UNITED STATES DEPARTMENT OF COMMERCE
United States Patent and Trademark Office
Address: COMMISSIONER FOR PATENTS
P.O. Box 1450,
Alexandria, Virginia 22313-1450
www.uspto.gov

APPLICATION NUMBER	FILING OR 371 (c) DATE	FIRST NAMED APPLICANT	ATTY. DOCKET NO./TITLE
10/155,666	05/24/2002	Nanibhushan Dattagupta	1034106-000008

CONFIRMATION NO. 5075

OC000000025555489

Dr. Nanibhushan Dattagupta
Applied Gene Technologies
6190 Cornerstone Court East, Suite 101
San Diego, CA 92121

Date Mailed: 08/27/2007

NOTICE OF ACCEPTANCE OF POWER OF ATTORNEY

This is in response to the Power of Attorney filed 05/31/2006.

The Power of Attorney in this application is accepted. Correspondence in this application will be mailed to the above address as provided by 37 CFR 1.33.

Office of Initial Patent Examination (571) 272-4000, or 1-800-PTO-9199
ATTORNEY/APPLICANT COPY

UNITED STATES PATENT AND TRADEMARK OFFICE

COMMISSIONER FOR PATENTS
UNITED STATES PATENT AND TRADEMARK OFFICE
P.O. BOX 1450
ALEXANDRIA, VA 22313-1450
WWW.USPTO.GOV

Paper No.

DR. MARK FRIEDMAN LTD.
C/o Bill Polkinghorn
Discovery Dispatch
9003 Florin Way
Upper Marlboro MD 20772

COPY MAILED
DEC 21 2007
OFFICE OF PETITIONS

In re Application of Asher Peretz Application No. 10/155,670 Filed: May 28, 2002 Attorney Docket No.: 2758/2 Title: LIGHTWEIGHT ARMOR PLATES, SYSTEMS INCLUDING SAME AND METHODS OF USE THEREOF	DECISION ON PETITION UNDER 37 C.F.R. § 1.181

This is a decision on the petition filed on October 29, 2007, pursuant to 37 C.F.R. § 1.181, requesting that the holding of abandonment in the above-identified application be withdrawn.

BACKGROUND

On January 26, 2004, the Office mailed a final Office action. On May 24, 2004, Applicant submitted a notice of appeal along with a one-month extension of time so as to make this response timely. On July 26, 2004[1], Applicant submitted an Appeal Brief.

On October 19, 2004, the Office mailed a Notification of Non-compliance with 37 C.F.R. § 1.192(c) (first notice), which indicated that the Appeal Brief was defective, and set a two-month period for response.

1 It is noted that July 24, 2004 fell on a Saturday.

On November 10, 2004, Applicant submitted a Supplemental Appeal Brief, which was also defective. Consequently, a second Notification of Non-compliant Appeal Brief (37 C.F.R. § 41.37) (second notice) was mailed on August 21, 2006. This second notice set a one-month period for response.

On September 21, 2006, a second supplemental Appeal Brief was filed, which was also defective. Consequently, a third Notification of Non-compliant Appeal Brief (37 C.F.R. § 41.37) (third notice) was mailed on November 20, 2006. This third notice set a one-month period for response.

On December 20, 2006, a third supplemental Appeal Brief was filed, which was also defective. Consequently, the Office mailed a communication on April 18, 2007 (fourth notice), indicating that the amended reply brief of December 20, 2006 "does not correct the errors of the previously filed brief." This communication did not extend the period for response that was set by the third notice.

No response was received, and no extensions of time were requested. Accordingly, the above-identified application became abandoned on December 21, 2006. A notice of abandonment was mailed on July 6, 2007.

RELEVANT PORTION OF THE MPEP

MPEP § 711.03(c) states, *in pertinent part*:

PETITION TO WITHDRAW HOLDING OF ABANDONMENT BASED ON FAILURE TO RECEIVE OFFICE ACTION

In Delgar v. Schulyer, 172 USPQ 513 (D.D.C. 1971), the court decided that the Office should mail a new Notice of Allowance in view of the evidence presented in support of the contention that the applicant's representative did not receive the original Notice of Allowance. Under the reasoning of Delgar, an allegation that an Office action was never received may be considered in a petition to withdraw the holding of abandonment. If adequately supported, the Office may grant the petition to withdraw the holding of abandonment and remail the Office action. That is, the reasoning of Delgar is applicable regardless of whether an application is held abandoned for failure to timely pay the issue fee (35 U.S.C. 151) or for failure to prosecute (35 U.S.C. 133).

To minimize costs and burdens to practitioners and the Office, the Office has modified the showing required to establish nonreceipt of an Office action. The showing required to establish nonreceipt of an Office communication must include a statement from the practitioner stating that the Office communication was not received by the practitioner and attesting to the fact that a search of the file jacket and docket records indicates that the Office communication was not received. A copy of the docket record where the nonreceived Office communication would have been entered had it been received and docketed must be attached to and referenced in practitioner's statement. For example, if a three month period for reply was set in the nonreceived Office action, a copy of the docket report showing all replies docketed for a date three months from the mail date of the nonreceived Office

action must be submitted as documentary proof of nonreceipt of the Office action. See Notice entitled "Withdrawing the Holding of Abandonment When Office Actions Are Not Received," 1156 O.G. 53 (November 16, 1993).

The showing outlined above may not be sufficient if there are circumstances that point to a conclusion that the Office action may have been lost after receipt rather than a conclusion that the Office action was lost in the mail (e.g., if the practitioner has a history of not receiving Office actions).

Evidence of nonreceipt of an Office communication or action (e.g., Notice of Abandonment or an advisory action) other than that action to which reply was required to avoid abandonment would not warrant withdrawal of the holding of abandonment. Abandonment takes place by operation of law for failure to reply to an Office action or timely pay the issue fee, not by operation of the mailing of a Notice of Abandonment. See Lorenz v. Finkl, 333 F.2d 885, 889-90, 142 USPQ 26, 29-30 (CCPA 1964); Krahn v. Commissioner, 15 USPQ2d 1823, 1824 (E.D. Va 1990); In re Application of Fischer, 6 USPQ2d 1573, 1574 (Comm'r Pat. 1988).

Two additional procedures are available for reviving an application that has become abandoned due to a failure to reply to an Office Action: (1) a petition under 37 CFR 1.137(a) based upon unavoidable delay; and (2) a petition under 37 CFR 1.137(b) based on unintentional delay.

ANALYSIS

Petitioner is an individual by the name of Mark Friedman, who is the attorney of record for the present application. Mr. Friedman, who is located in Tel Aviv, does not receive mailings pertaining to this application from the Office directly - all correspondence pertaining to this application is sent to an individual by the name of Bill Polkinghorn (who is located in Maryland), who then forwards the correspondence to Mr. Friedman.

Petitioner has submitted a declaration of facts from Mr. Polkinghorn, in which he has asserted that he serves as "the local agent of Dr. Friedman," and he receives and forwards mail to Mr. Friedman.

With the present petition, Petitioner has asserted that the fourth notice of April 18, 2007 was not received. A copy of this fourth notice has been included with this decision.

Receipt of the concurrently submitted supplemental Appeal Brief is acknowledged.

Mr. Friedman has submitted a declaration of facts, where he has attested to the fact that a search of both the file jacket that he maintains and his docket records indicates that the Office communication was not received, and has provided a copy of his docket record where the nonreceived Office communication would have been entered had it been received from Mr. Polkinghorn and docketed.

Hence, it appears that Petitioner is attempting to meet the requirements of Delgar v. Schulyer, as delineated in MPEP § 711.03(c)(I)(A). However, the Delgar requirements are not relevant to the pertinent case, in that the communication in question was mailed to the attorney of record not by the Office, but rather by his local agent. In Delgar, the Office mailed a notice of allowance to the applicant, and the Delgar showing provides a mechanism by which applicants can establish that a mailing was not received from the Office. Petitioner is attempting to establish that a mailing was not received from his local agent, a situation that is outside of the scope of Delgar.

It is noted in passing that Petitioner has requested that the holding of abandonment be withdrawn, and that he be "allowed time to respond to the Official letter." The record shows that Petitioner was provided with four opportunities to submit a corrected Appeal Brief (the fourth of which being the fourth notice which he has asserted was not received from Mr. Polkinghorn). Moreover, it is noted that the fourth notice did not extend the period for response that was set by the third notice.

As such, the petition must be **DISMISSED**.

Any reply must be submitted within **TWO MONTHS** from the mail date of this decision. Extensions of time under 37 C.F.R. § 1.136(a) are permitted. The reply should include a cover letter entitled "Renewed Petition Under 37 C.F.R. § 1.181(a)." This is not a final agency action within the meaning of 5 U.S.C § 704.

The renewed petition should indicate in a prominent manner that the attorney handling this matter is Paul Shanoski, and may be submitted by mail[2], hand-delivery[3], or facsimile[4]. Registered users of EFS-Web may alternatively submit a response to this decision via EFS-Web[5].

Alternatively, Petitioner may wish to strongly consider filing a petition pursuant to 37 C.F.R. §§ 1.137(a) and/or (b). Unless Petitioner believes that he can successfully assert that the entire period of delay was unavoidable, he may wish to file a petition under the unintentional standard.

---

2 Mail Stop Petition, Commissioner for Patents, United States Patent and Trademark Office, P.O. Box 1450, Alexandria, VA, 22313-1450.
3 Customer Window, Randolph Building, 401 Dulaney Street, Alexandria, VA, 22314.
4 (571) 273-8300- please note this is a central facsimile number.
5 https://sportal.uspto.gov/authenticate/authenticateuserlocalepf.html

Telephone inquiries regarding *this decision* should be directed to the undersigned at (571) 272-3225[6]. All other inquiries concerning examination procedures or status of the application should be directed to the Technology Center.

Paul Shanoski
Senior Attorney
Office of Petitions

Encl. Courtesy copy of the fourth notice of April 18, 2007.

---

6 Petitioner will note that all practice before the Office should be in writing, and the action of the Office will be based exclusively on the written record in the Office. See 37 C.F.R. § 1.2. As such, Petitioner is reminded that no telephone discussion may be controlling or considered authority for Petitioner's further action(s).

UNITED STATES PATENT AND TRADEMARK OFFICE

UNITED STATES DEPARTMENT OF COMMERCE
United States Patent and Trademark Office
Address: COMMISSIONER FOR PATENTS
P.O. Box 1450
Alexandria, Virginia 22313-1450
www.uspto.gov

APPLICATION NO.	FILING DATE	FIRST NAMED INVENTOR	ATTORNEY DOCKET NO.	CONFIRMATION NO.
10/155,670	05/28/2002	Asher Peretz	2758/2	5068

7590 04/18/2007

DR. MARK FRIEDMAN LTD.
C/o Bill Polkinghorn
Discovery Dispatch
9003 Florin Way
Upper Marlboro, MD 20772

EXAMINER

ART UNIT	PAPER NUMBER

DATE MAILED: 04/18/2007

Please find below and/or attached an Office communication concerning this application or proceeding.

Courtesy Copy

UNITED STATES DEPARTMENT OF COMMERCE
U.S. Patent and Trademark Office
Address: COMMISSIONER FOR PATENTS
P.O. Box 1450
Alexandria, Virginia 22313-1450

APPLICATION NO./ CONTROL NO.	FILING DATE	FIRST NAMED INVENTOR / PATENT IN REEXAMINATION	ATTORNEY DOCKET NO.
10 155 670			

EXAMINER

ART UNIT	PAPER
	20070416

Courtesy Copy

DATE MAILED:

Please find below and/or attached an Office communication concerning this application or proceeding.

Commissioner for Patents

The amended reply brief submitted 12/20/06 does not correct the errors of the previously filed brief. 37 CFR § 41.27(c(1)(ix) states that the brief must contain copies of the evidence submitted under 37 CFR 1.30, 1.131, or 1.132 or of any other evidence entered by the examiner and relied upon by appellant in the appeal, along with a statement setting forth where in the record that evidence was entered by the examiner. The amended reply brief does not contain such evidence. Applicant is reminded that the time for reply is set forth in the notice of non-compliant appeal brief mailed 11/20/06, no new time period begins with the mailing of this communication, extensions of time can be bought as set forth in the previous notification.

M Clement

Michelle (Shelley) Clement
Primary Examiner
Art Unit: 3641

UNITED STATES PATENT AND TRADEMARK OFFICE

Commissioner for Patents
United States Patent and Trademark Office
P.O. Box 1450
Alexandria, VA 22313-1450
www.uspto.gov

MERCHANT & GOULD (MICROSOFT)
P.O. BOX 2903
MINNEAPOLIS MN 55402-0903

COPY MAILED

SEP 23 2008

OFFICE OF PETITIONS

In re Application of
Athapan Arayasantiparb et al
Application No. 10/155,680
Filed: May 23, 2002
Attorney Docket No. 60001.0177US01/ms 186591.

DECISION GRANTING PETITION UNDER 37 CFR 1.313(c)(2)

This is a decision on the petition under 37 CFR 1.313(c)(2), filed September 19, 2008, to withdraw the above-identified application from issue after payment of the issue fee.

The petition is **GRANTED**.

The above-identified application is withdrawn from issue for consideration of a submission under 37 CFR 1.114 (request for continued examination). *See* 37 CFR 1.313(c)(2).

Petitioner is advised that the issue fee paid on September 3, 2008 cannot be refunded. If, however, this application is again allowed, petitioner may request that it be applied towards the issue fee required by the new Notice of Allowance.[1]

Telephone inquiries should be directed to the undersigned at (571) 272-3208.

This application is being referred to Technology Center AU 2626 for processing of the request for continued examination under 37 CFR 1.114 and for consideration of the concurrently filed IDS.

Karen Creasy

Karen Creasy
Petitions Examiner
Office of Petitions

---

[1] *The request to apply the issue fee to the new Notice may be satisfied by completing and returning the new Part B – Fee(s) Transmittal Form (along with any balance due at the time of submission). Petitioner is advised that the Issue Fee Transmittal Form* ***must*** *be completed and timely submitted to avoid abandonment of the application.*

UNITED STATES PATENT AND TRADEMARK OFFICE

Commissioner for Patents
United States Patent and Trademark Office
P.O. Box 1450
Alexandria, VA 22313-1450
www.uspto.gov

MERCHANT & GOULD (MICROSOFT)
P.O. BOX 2903
MINNEAPOLIS MN 55402-0903

MAILED

AUG 24 2009

OFFICE OF PETITIONS

In re Application of	:	
Athapan Arayasantiparb et al	:	
Application No. 10/155,680	:	DECISION GRANTING PETITION
Filed: May 23, 2002	:	UNDER 37 CFR 1.313(c)(2)
Attorney Docket No.	:	
60001.0177US01/186591.01	:	

This is a decision on the petition under 37 CFR 1.313(c)(2), filed August 23, 2009, to withdraw the above-identified application from issue after payment of the issue fee.

The petition is **GRANTED**.

The above-identified application is withdrawn from issue for consideration of a submission under 37 CFR 1.114 (request for continued examination). *See* 37 CFR 1.313(c)(2).

Petitioner is advised that the issue fee paid on July 29, 2009 cannot be refunded. If, however, this application is again allowed, petitioner may request that it be applied towards the issue fee required by the new Notice of Allowance.[1]

Telephone inquiries should be directed to the undersigned at (571) 272-3208.

This application is being referred to Technology Center AU 2626 for processing of the request for continued examination under 37 CFR 1.114 and for consideration of the concurrently filed IDS.

/Karen Creasy/
Karen Creasy
Petitions Examiner
Office of Petitions

---

[1] *The request to apply the issue fee to the new Notice may be satisfied by completing and returning the new Part B – Fee(s) Transmittal Form (along with any balance due at the time of submission). Petitioner is advised that the Issue Fee Transmittal Form* ***must*** *be completed and timely submitted to avoid abandonment of the application.*

UNITED STATES PATENT AND TRADEMARK OFFICE

Commissioner for Patents
United States Patent and Trademark Office
P.O. Box 1450
Alexandria, VA 22313-1450
www.uspto.gov

COPY MAILED

AUG 06 2007

OFFICE OF PETITIONS

GREENBERG TRAURIG, P.A.
1221 Brickell Avenue
Miami, FL 33131

In re Application of

Hendesron, et al.

Application No. 10/155,682

Filed: May 23, 2002

Attorney Docket No. 46409.010000

DECISION ON PETITION

This is a decision on the petition under 37 CFR 1.137(b), filed April 16, 2007, to revive the above-identified application.

The petition is **GRANTED**.

The above-cited application became abandoned for failure to reply in a timely manner to the restriction/election requirement mailed August 31, 2005, which set a shortened period for reply of one (1) month from its mailing date No extensions of time were obtained within the allowable period. Accordingly, the application became abandoned on October 2, 2005. A Notice of Abandonment was mailed on April 18, 2006.

The restriction filed April 16, 2007, is noted.

It is not apparent whether the person signing the statement of unintentional delay was in a position to have firsthand or direct knowledge of the facts and circumstances of the delay at issue. Nevertheless, such statement is being treated as having been made as the result of a reasonable inquiry into the facts and circumstances of such delay. See 37 CFR 10.18(b) and Changes to Patent Practice and Procedure; Final Rule Notice, 62 Fed. Reg. 53131, 53178 (October 10, 1997), 1203 Off. Gaz. Pat. Office 63, 103 (October 21, 1997). In the event that such an inquiry has not been made, petitioner must make such an inquiry. If such inquiry results in the discovery that it is not correct that the entire delay in filing the required reply from the due date for the reply until the filing of a grantable petition pursuant to 37 CFR 1.137(b) was unintentional, petitioner must notify the Office.

There is no indication that the person signing the instant petition was ever given a power of attorney or authorization of agent to prosecute the above-identified application. If the person signing the instant petition desires to receive future correspondence regarding this application, the appropriate power of attorney or authorization of agent must be submitted. While a courtesy copy of this decision is being

mailed to the person signing the instant petition, all future correspondence will be directed to the address of currently of record until such time as appropriate instructions are received to the contrary.

The requests for a change in the power of attorney and correspondence address filed August 4, 2006 and February 16, 2007, are noted but cannot be made of record because the requests are signed by only one of the two named inventors. In order for the change to be made of record, the request must be made by all of the joint inventors named on the application.

The application is being forwarded to Technology Center 3600, GAU 3625 for further processing.

Telephone inquiries concerning this decision should be directed to the undersigned at (571) 272-3222.

Kenya A. McLaughlin
Petitions Attorney
Office of Petitions

Cc:
Mark Levy
Press Building
Suite 902
19 Chenango Street
Binghamton, NY 13901

UNITED STATES PATENT AND TRADEMARK OFFICE

Commissioner for Patents
United States Patent and Trademark Office
P.O. Box 1450
Alexandria, VA 22313-1450
www.uspto.gov

GREENBERG TRAURIG P.A.
1221 Brickell Avenue
Miami, FL 33131

MAILED

FEB 11 2009

OFFICE OF PETITIONS

In re Application of	:	
Greg S. Henderson et al	:	
Application No. 10/155,682	:	ON PETITION
Filed: May 23, 2002	:	
Attorney Docket No. H-753	:	

This is a decision on the petition, filed on April 4, 2008, which is being treated as a petition requesting that the requirement of 37 CFR § 1.48(a) be waived, or suspended pursuant to 37 CFR § 1.183, in order to delete an inventor.

The petition is **dismissed**.

Petitioner submits a request for corrected inventorship, providing a verified statement and affidavit by Greg S. Henderson stating that co-applicant John Turner did not contribute to the invention, nor did he conceive or help reduce to practice the invention, and that the error in inventorship occurred without deceptive intent.

37 CFR § 1.183 provides that in an extraordinary situation, when justice requires, any requirement of the regulations which is not a requirement of the statutes may be suspended or waived by the Commissioner. In order for grant of a petition under 37 CFR § 1.183, petitioners must show (1) that this is an extraordinary situation where (2) justice requires waiver of the rule. In re Sivertz, 227 U.S.P.Q. 255,256 (Comm'r Pat. 1985). Petitioner has not shown that either condition exists in this case.

Circumstances are not extraordinary, and do not require waiver of the rules when a party makes an avoidable mistake in filing or not filing papers. Circumstances resulting from petitioner's failure to exercise due care, or lack of knowledge of , or failure to properly apply, the patent statutes or rules are not, in any event, extraordinary circumstances where the interest of justice require the granting of relief.. See In re Tetrafluor Inc., 17 USPQ2d 1160, 1162 (Comm'r Pats. 1990).

But in any event, the USPTO will not normally consider an extraordinary remedy, when the patent statutes and rules of practice already provide an avenue for obtaining the relief sought. See Cantello v. Rasmussen, 220 USPQ 664, 664(Comm'r Pat. 1982). Here correction of

Inventorship may be obtained by the filing of a continuing application under 37 CFR § 1.53 without the need for filing a request under 37 CFR 1.48. The continuing application must be filed with the correct inventorship named. Where the name of an inventor is to be deleted applicant can file a continuation or divisional application with a newly executed oath or declaration properly naming the correct inventors. A request for deletion of the names of the persons who are not inventors in the continuing application is not necessary. See MPEP 201.03, and the requirements of 37 CFR § 1.78(a)(1)(ii).

There is no indication that the person signing the petition was ever given a power of attorney or authorization of agent to prosecute the application. If the person signing the petition desires to receive future correspondence regarding this application, the appropriate power of attorney or authorization of agent must be submitted. While a courtesy copy of this decision is being mailed to the person signing the petition, all future correspondence will be directed to the address currently of record until appropriate instructions are received.

The file does not indicate a change of address has been submitted, although the address given on the petition differs from the address of record. If appropriate, a change of address should be filed in accordance with MPEP 601.03. A courtesy copy of this decision is being mailed to the address given on the petition, however, the Office will mail all future correspondence solely to the address of record.

Telephone inquiries regarding this communication should be directed to the undersigned at (571) 272-0602.

Thurman K. Page
Petitions Examiner
Office of Petitions

cc: HINMAN, HOWARD, & KATTELL, LLP
80 Exchange Street
P.O. Box 5250
Binghamton, New York 13901

05 MAY 2006

UNITED STATES PATENT AND TRADEMARK OFFICE

Commissioner for Patents
United States Patent and Trademark Office
P.O. Box 1450
Alexandria, VA 22313-1450
www.uspto.gov

BAKER & DANIELS
111 East Wayne Street, Suite 800
Fort Wayne, IN 46802

In re Application of:
THELEN, Sarah, L., et al.
Application No.: 10/155,683
Filing Date: May 23, 2002
Atty Docket No.: ZIM0085/ZM0454
For: METHOD AND APPARATUS FOR REDUCING FEMORAL FRACTURES

DECISION ON PETITION UNDER 37 CFR 1.78(a)(3)

This is a decision on the "Petition To Accept An Unintentionally Delayed Claim Under 35 U.S.C. § 120" filed August 08, 2005, treated herein under 37 CFR 1.78(a)(3). The petition seeks acceptance of an unintentionally delayed claim under 35 U.S.C. §§ 120 for the benefit of the prior filed application set forth in the concurrently filed amendment.

The petition is **GRANTED**.

The present non-provisional application was filed after November 29, 2000, and the claim herein for the benefit of priority to the prior-filed provisional application is submitted after the expiration of the period specified in 37 CFR 1.78(a)(2)(ii). Therefore this is a proper petition under 37 CFR 1.78(a)(3).

A petition under 37 CFR 1.78(a)(3) is only applicable to those applications filed on or after November 29, 2000. Further, the petition is appropriate only after the expiration of the period specified in 37 CFR 1.78(a)(2)(ii). In addition, the petition must be accompanied by:

(1) the reference to the prior-filed non-provisional application required by 35 U.S.C. 120 and 37 CFR 1.78(a)(2)(i), unless previously submitted;
(2) the surcharge set forth in 37 CFR 1.17(t);
(3) a statement that the entire delay between the date the claim was due under 37 CFR 1.78(a)(2)(ii) and the date the claim was filed was unintentional.

The petition complies with the requirements for a grantable petition under 37 CFR 1.78(a)(6) in that: (1) a reference to the prior-filed provisional application has been included in an amendment to the first sentence of the specification following the title, as provided by 37 CFR 1.78(a)(2)(iii); (2) the surcharge fee required by 37 CFR 1.17(t) has been submitted; and (3) the petition includes a proper statement of unintentional delay. Accordingly, having found that the petition for acceptance of the unintentionally delayed claim for the benefit of priority under 35 U.S.C. 120 to the prior-filed non-provisional application satisfies the conditions of 37 CFR 1.78(a)(3), the petition is granted.

The granting of the petition to accept the delayed benefit claim to the prior-filed application under 37 CFR 1.78(a)(3) should <u>not</u> be construed as meaning that this application is entitled to the benefit of the filing date of the prior-filed application. In order for this application to be entitled to the benefit of the prior-filed application, all other requirements under 35 U.S.C. 120 and 37 CFR 1.78(a)(1) and (a)(2) must be met. Similarly, the fact that the corrected Filing Receipt accompanying this decision on petition will include the prior-filed application should not be construed as meaning that applicant is entitled to the claim for benefit of priority to the prior-filed application noted thereon. Accordingly, the examiner will, in due course, consider this benefit claim and determine whether this application is entitled to the benefit of the earlier filing date.

A corrected Filing Receipt, which includes the priority claim to the prior-filed non-provisional application, accompanies this decision on petition.

Any questions concerning this decision may be directed to Richard M. Ross at (571) 272-3296. All other inquiries concerning either the examination procedures or status of the application should be directed to the Technology Center.

This matter is being referred to Technology Center Art Unit 3732 for appropriate consideration by the examiner of applicant's entitlement to claim benefit of priority under 35 U.S.C. 120 to prior-filed non-provisional Application No. 09/520,351.

Boris Milef
Legal Examiner
Office of Petitions and PCT Legal Administration

ATTACHMENT: Corrected Filing Receipt

UNITED STATES PATENT AND TRADEMARK OFFICE

Commissioner for Patents
United States Patent and Trademark Office
Washington, D.C. 20231
www.uspto.gov

Paper No. 8

O'MELVENY & MYERS LLP
400 SO HOPE STREET
LOS ANGELES CA 90071-2899

COPY MAILED

APR 3 0 2003

OFFICE OF PETITIONS

In re Application of
Wang, et al.
Application No. 10/155,694
Filed: May 24, 2002
Attorney Docket No. 843161-272
Title: PROXY CACHE PRELOADER

DECISION REFUSING STATUS
UNDER 37 CFR 1.47(a)

This is in response to the petition under 37 CFR 1.47(a), filed November 1, 2002.

The petition under 37 CFR 1.47(a) is **DISMISSED**.

Rule 47 applicant is given TWO MONTHS from the mailing date of this decision to reply, correcting the below-noted deficiencies. Any reply should be entitled "Request for Reconsideration of Petition Under 37 CFR 1.47(a)," and should only address the deficiencies noted below, except that the reply may include an oath or declaration executed by the non-signing inventors. **Failure to respond will result in abandonment of the application**. Any extensions of time will be governed by 37 CFR 1.136(a).

The above-identified application was filed on May 24, 2002, without an executed oath or declaration. Accordingly, on July 1, 2002, applicant was mailed a Notice to File Missing Parts of Nonprovisional Application - Filing Date Granted, requiring, *inter alia,* an executed oath or declaration and a surcharge for its late filing. This Notice set a two-month period for reply.

In reply, applicant filed the instant petition and paid the surcharge for late filing of the declaration. To make timely this reply, applicant obtained a two month extension of time. Accompanying the petition was a declaration executed by joint inventors Jay Brandenburg and David C. Tracey, but with the signature blocks for joint inventors Feng Wang and Ronan French left blank. As applicant did not file a 37 CFR 1.47(a) petition for non-signing inventor French, a second Notice to File Missing Parts was mailed on November 20, 2002, requiring the signature of French. On December 10, 2002, applicant filed a declaration executed by French.

A grantable petition under 37 CFR 1.47(a) requires: (1) proof that the non-signing inventor(s) cannot be reached or refuses to sign the oath or declaration after having been presented with the application papers (specification, claims and drawings); (2) an acceptable oath or declaration in compliance with 37 CFR 1.63; (3) the petition fee; and (4) a statement of the last known address of the non-signing inventor(s). The instant petition does not satisfy requirement (2).

In providing copies of internet search results and a copy of an envelope addressed to Wang returned as undeliverable, applicant has established that Wang could not be reached.

However, applicant has failed to submit an oath or declaration in compliance with 37 CFR 1.63. The declaration is not acceptable because the alteration to the residence of Jay Brandenburg is not **initialed and dated.**[1] Regarding this, the Manual of Patent Examining Procedure states that it is "improper for anyone, including counsel, to alter, rewrite, or partly fill in any part of the application, including the oath or declaration, after execution of the oath or declaration by the applicant." Furthermore, the Office "will not consider whether noninitialed and/or nondated alterations were made before or after signing of the oath or declaration but will require a new oath or declaration."[2]

On renewed petition, applicant must submit a declaration in compliance with 37 CFR 1.63.

Further correspondence with respect to this matter should be addressed as follows:

By mail[3]: Assistant Commissioner for Patents
Box DAC
Washington, D.C. 20231

By FAX: (703) 308-6916
Attn: Office of Petitions

By hand: Crystal Plaza Four, Suite 3C23
2201 S. Clark Place
Arlington, VA

Telephone inquiries related to this decision may be directed to the undersigned at (703) 305-0272.

Cliff Congo
Petitions Attorney
Office of Petitions

---

[1] "Any interlineation, erasure, cancellation or other alteration of the application papers...should be dated and initialed or signed by the applicant on the same sheet of paper." 37 CFR 1.52(c)(1).

[2] MPEP 605.04(a).

[3] Effective May 1, 2003, the mailing address for the Office of Petitions will be changed to "Mail Stop Petitions, Commissioner for Patents, P.O. Box 1450, Alexandria VA 22313-1450".

UNITED STATES PATENT AND TRADEMARK OFFICE

Commissioner for Patents
Un[illegible] States Patent and Trademark Office
Washington, D.C. 20231
www.uspto.gov

Paper No. 8

OIPE JC102
JUN 0 9 2003
PATENT & TRADEMARK OFFICE

O'MELVENY & MYERS LLP
400 SO HOPE STREET
LOS ANGELES CA 90071-2899

COPY MAILED
APR 3 0 2003
OFFICE OF PETITIONS

In re Application of
Wang, et al.
Application No. 10/155,694
Filed: May 24, 2002
Attorney Docket No. 843161-272
Title: PROXY CACHE PRELOADER

DECISION REFUSING STATUS
UNDER 37 CFR 1.47(a)

This is in response to the petition under 37 CFR 1.47(a), filed November 1, 2002.

The petition under 37 CFR 1.47(a) is **DISMISSED**.

Rule 47 applicant is given TWO MONTHS from the mailing date of this decision to reply, correcting the below-noted deficiencies. Any reply should be entitled "Request for Reconsideration of Petition Under 37 CFR 1.47(a)," and should only address the deficiencies noted below, except that the reply may include an oath or declaration executed by the non-signing inventors. **Failure to respond will result in abandonment of the application**. Any extensions of time will be governed by 37 CFR 1.136(a).

The above-identified application was filed on May 24, 2002, without an executed oath or declaration. Accordingly, on July 1, 2002, applicant was mailed a Notice to File Missing Parts of Nonprovisional Application - Filing Date Granted, requiring, *inter alia*, an executed oath or declaration and a surcharge for its late filing. This Notice set a two-month period for reply.

In reply, applicant filed the instant petition and paid the surcharge for late filing of the declaration. To make timely this reply, applicant obtained a two month extension of time. Accompanying the petition was a declaration executed by joint inventors Jay Brandenburg and David C. Tracey, but with the signature blocks for joint inventors Feng Wang and Ronan French left blank. As applicant did not file a 37 CFR 1.47(a) petition for non-signing inventor French, a second Notice to File Missing Parts was mailed on November 20, 2002, requiring the signature of French. On December 10, 2002, applicant filed a declaration executed by French.

RECEIVED
JUN 1 1 2003
OFFICE OF PETITIONS

O'Melveny & Myers LLP
File: 843161 - 272
Action Item: RESPONSE (DECL)
Date Due: 6/30/03
Critical Date: 9/30/03
Attorney Path: BMB
Docketed By: CR
Verified By: Bupe 5/7

O'MELVENY & MYERS
RECEIVED
MAY 5 - 2003
IP CALENDAR DEPT:

A grantable petition under 37 CFR 1.47(a) requires: (1) proof that the non-signing inventor(s) cannot be reached or refuses to sign the oath or declaration after having been presented with the application papers (specification, claims and drawings); (2) an acceptable oath or declaration in compliance with 37 CFR 1.63; (3) the petition fee; and (4) a statement of the last known address of the non-signing inventor(s). The instant petition does not satisfy requirement (2).

In providing copies of internet search results and a copy of an envelope addressed to Wang returned as undeliverable, applicant has established that Wang could not be reached.

However, applicant has failed to submit an oath or declaration in compliance with 37 CFR 1.63. The declaration is not acceptable because the alteration to the residence of Jay Brandenburg is not **initialed and dated.**[1] Regarding this, the Manual of Patent Examining Procedure states that it is "improper for anyone, including counsel, to alter, rewrite, or partly fill in any part of the application, including the oath or declaration, after execution of the oath or declaration by the applicant." Furthermore, the Office "will not consider whether noninitialed and/or nondated alterations were made before or after signing of the oath or declaration but will require a new oath or declaration."[2]

On renewed petition, applicant must submit a declaration in compliance with 37 CFR 1.63.

Further correspondence with respect to this matter should be addressed as follows:

By mail[3]: Assistant Commissioner for Patents
Box DAC
Washington, D.C. 20231

By FAX: (703) 308-6916
Attn: Office of Petitions

By hand: Crystal Plaza Four, Suite 3C23
2201 S. Clark Place
Arlington, VA

Telephone inquiries related to this decision may be directed to the undersigned at (703) 305-0272.

Cliff Congo
Petitions Attorney
Office of Petitions

RECEIVED
JUN 1 1 2003
OFFICE OF PETITIONS

---

[1] "Any interlineation, erasure, cancellation or other alteration of the application papers...should be dated and initialed or signed by the applicant on the same sheet of paper." 37 CFR 1.52(c)(1).

[2] MPEP 605.04(a).

[3] Effective May 1, 2003, the mailing address for the Office of Petitions will be changed to "Mail Stop Petitions, Commissioner for Patents, P.O. Box 1450, Alexandria VA 22313-1450".

UNITED STATES PATENT AND TRADEMARK OFFICE

COMMISSIONER FOR PATENTS
UNITED STATES PATENT AND TRADEMARK OFFICE
P.O. BOX 1450
ALEXANDRIA, VA 22313-1450
WWW.USPTO.GOV

Paper No. 11

O'MELVENY & MYERS LLP
400 SO HOPE STREET
LOS ANGELES CA 90071-2899

COPY MAILED

JUN 16 2003

OFFICE OF PETITIONS

In re Application of
Wang, et al.
Application No. 10/155,694
Filed: May 24, 2002
Attorney Docket No. 843161-272
Title: PROXY CACHE PRELOADER

DECISION ACCORDING STATUS
UNDER 37 CFR 1.47(a)

This is in response to the renewed petition under 37 CFR 1.47(a), filed June 9, 2003.

The renewed petition under 37 CFR 1.47(a) is **GRANTED**.

The above-identified application was filed on May 24, 2002, without an executed oath or declaration. Accordingly, on July 1, 2002, applicant was mailed a Notice to File Missing Parts of Nonprovisional Application - Filing Date Granted, requiring, *inter alia*, an executed oath or declaration and a surcharge for its late filing. This Notice set a two-month period for reply.

In reply, applicant filed a petition under 37 CFR 1.47(a) on November 1, 2002 and paid the surcharge for late filing of the declaration. To make timely this reply, applicant obtained a two month extension of time. Accompanying the petition was a declaration executed by joint inventors Jay Brandenburg and David C. Tracey, but with the signature blocks for joint inventors Feng Wang and Ronan French left blank. As applicant did not file a 37 CFR 1.47(a) petition for non-signing inventor French, a second Notice to File Missing Parts was mailed on November 20, 2002, requiring the signature of French. On December 10, 2002, applicant filed a declaration executed by French.

However, the petition was dismissed in a decision mailed on April 30, 2003. The declaration was not acceptable because it contained an alteration to the residence of Brandenburg that was not initialed and dated.

A grantable petition under 37 CFR 1.47(a) requires: (1) proof that the non-signing inventor(s) cannot be reached or refuses to

sign the oath or declaration after having been presented with the application papers (specification, claims and drawings); (2) an acceptable oath or declaration in compliance with 37 CFR 1.63; (3) the petition fee; and (4) a statement of the last known address of the non-signing inventor(s).

On renewed petition, rule 47 applicant has submitted a declaration in compliance with 37 CFR 1.63. The other requirements for a grantable petition under 37 CFR 1.47(a) were previously satisfied with the petition filed on November 1, 2002. Accordingly, the above-identified application is hereby accorded Rule 1.47(a) status.

Pursuant to 37 CFR 1.47(c), this Office will forward notice of this application's filing to the non-signing inventor at the last known address given in the petition. Notice of the filing of this application will also be published in the Official Gazette.

The application file is being forwarded to Technology Center 2600, Group Art Unit 2665, for examination in due course.

Telephone inquiries related to this decision may be directed to the undersigned at (703) 305-0272.

Cliff Congo

Cliff Congo
Petitions Attorney
Office of Petitions

UNITED STATES PATENT AND TRADEMARK OFFICE

COMMISSIONER FOR PATENTS
UNITED STATES PATENT AND TRADEMARK OFFICE
P.O. BOX 1450
ALEXANDRIA, VA 22313-1450
WWW.USPTO.GOV

FENG WANG
2727 MIDTOWN CT #26
PALO ALTO CA 94303

In re Application of Feng Wang, Jay Brandenburg, Ronan French, David C. Tracey Application No. 10/155,694 Filed: May 24, 2002 Title: PROXY CACHE PRELOADER	: : : : : :	LETTER

Dear Ms. Wang:

You are named as a joint inventor in the above-identified United States patent application filed under the provisions of 35 USC 116 (United States Code) and 37 CFR 1.47(a), Rules of Practice in Patent Cases. Should a patent be granted on the application you will be designated therein as a joint inventor.

As a named inventor you are entitled to inspect any paper in the file wrapper of the application, order copies of all or any part thereof (at a prepaid cost per 37 CFR 1.19) or make your position of record in the application. Alternatively, you may arrange to do any of the preceding through a registered patent attorney or agent presenting written authorization from you. If you care to join the application, agent of record (see below) would presumably assist you. Joining in the application would entail the filing of an appropriate oath or declaration by you pursuant to 37 CFR 1.63.

Telephone inquiries regarding this communication should be directed to Petitions Attorney Cliff Congo at (703) 305-0272. Requests for information regarding your application should be directed to the File Information Unit at (703) 308-2733. Information regarding how to pay for and order a copy of the application, or a specific paper in the application, should be directed to the Certification Division at (703) 308-9726 or 1-800-972-6382 (outside the Washington D.C. area).

Cliff Congo
Petitions Attorney
Office of Petitions

Brian M. Berliner
O'Melveny & Myers LLP
400 South Hope Street
Los Angeles, California 90071-2899
(213)430-6000

UNITED STATES PATENT AND TRADEMARK OFFICE

Commissioner for Patents
United States Patent and Trademark Office
Washington, D.C. 20231
www.uspto.gov

Paper No. 10

PERMAN & GREEN
425 POST ROAD
FAIRFIELD, CT 06824

COPY MAILED

FEB 19 2003

OFFICE OF PETITIONS

In re Application of: David Rolston, Tomasz Maj, Simon Cowley and Paul Marino Application No. 10/155,695 Filed: May 24, 2002 Title of Invention: FERRULE FOR AN ARRAY OF OPTICAL FIBERS AND CONNECTOR STRUCTURE INCLUDING THIS FERRULE	DECISION GRANTING STATUS UNDER 37 CFR 1.47(a)

This is in response to the Petition Under 37 C.F.R. 1.47(a), filed December 9, 2002, to allow the other inventor(s) to proceed with the application on behalf of himself or herself and the nonsigning inventor.

The petition is **granted**.

The above-identified application and papers have been reviewed and found in compliance with 37 CFR 1.47(a). This application is hereby accorded Rule 1.47(a) status.

Petitioner has shown that the non-signing inventor, Paul Marino, refuses to sign the declaration after being presented with the above-identified application and declaration.

As provided in Rule 1.47(a), this Office will forward notice of this application's filing to the non-signing inventor at the address given in the Petition. Notice of the filing of this application will also be published in the Official Gazette.

The application file is being forwarded to the Office of Initial Patent Examination for continued processing.

Telephone inquiries related to this decision may be directed to the undersigned at (703) 305-0014.

Derek L. Woods
Petitions Attorney
Office of Petitions

UNITED STATES PATENT AND TRADEMARK OFFICE

Commissioner for Patents
United States Patent and Trademark Office
P.O. Box 1450
Alexandria, VA 22313-1450
www.uspto.gov

BEYER WEAVER LLP
P.O. BOX 70250
OAKLAND CA 94612-0250

COPY MAILED

MAR 28 2008

OFFICE OF PETITIONS

In re Application of	:	
DESANTI, et al.	:	
Application No. 10/155,698	:	DECISION GRANTING PETITION
Filed: May 24, 2002	:	UNDER 37 CFR 1.313(c)(2)
Attorney Docket No. **ANDIP015**	:	

This is a decision on the petition under 37 CFR 1.313(c)(2), filed March 21, 2008, to withdraw the above-identified application from issue after payment of the issue fee.

The petition is **GRANTED.**

The above-identified application is withdrawn from issue for consideration of a submission under 37 CFR 1.114 (request for continued examination). *See* 37 CFR 1.313(c)(2).

Petitioner is advised that the issue fee paid on March 21, 2008 cannot be refunded. If, however, this application is again allowed, petitioner may request that it be applied towards the issue fee required by the new Notice of Allowance.[1]

Telephone inquiries should be directed to the undersigned at (571) 272-7253.

This application is being referred to Technology Center AU 2616 for processing of the request for continued examination under 37 CFR 1.114 and for consideration of the concurrently filed information disclosure statement.

Monica A. Graves
Petitions Examiner
Office of Petitions

---

[1] *The request to apply the issue fee to the new Notice may be satisfied by completing and returning the new Part B – Fee(s) Transmittal Form (along with any balance due at the time of submission). Petitioner is advised that the Issue Fee Transmittal Form* ***must*** *be completed and timely submitted to avoid abandonment of the application.*

UNITED STATES PATENT AND TRADEMARK OFFICE

Commissioner for Patents
United States Patent and Trademark Office
Washington, D.C. 20231
www.uspto.gov

Paper No. 4

YOUNG LAW FIRM
A PROFESSIONAL CORPORATION
4370 ALPINE ROAD SUITE 106
PORTOLA VALLEY CA 94028

COPY MAILED

JAN 23 2003

OFFICE OF PETITIONS

In re Application of:
Roberta Lee, James W. Vetter and
Natalie Hyland
Application No. 10/155,704
Filed: May 22, 2002
Title of Invention: BREAST STABILIZERS HAVING AN OPEN LATTICE STRUCTURE AND IMAGING METHODS USING SAME

DECISION GRANTING STATUS UNDER 37 CFR 1.47(a)

This is in response to the Petition Under 37 C.F.R. 1.47(a), filed October 22, 2002, to allow the other inventor(s) to proceed with the application on behalf of himself or herself and the nonsigning inventor. A four (4) month extension-of-time is requested and is hereby granted.

The petition is **granted**.

The above-identified application and papers have been reviewed and found in compliance with 37 CFR 1.47(a). This application is hereby accorded Rule 1.47(a) status.

Petitioner has shown that the non-signing inventor, Roberta Lee, refuses to sign the declaration after being presented with the above-identified application and declaration.

As provided in Rule 1.47(a), this Office will forward notice of this application's filing to the non-signing inventor at the addresses given in the Petition. Notice of the filing of this application will also be published in the Official Gazette.

The application file is being forwarded to the Office of Initial Patent Examination for continued processing.

Telephone inquiries related to this decision may be directed to the undersigned at (703) 305-0014.

Derek L. Woods
Petitions Attorney
Office of Petitions
Office of the Deputy Commissioner
for Patent Examination Policy

UNITED STATES PATENT AND TRADEMARK OFFICE

Commissioner for Patents
United States Patent and Trademark Office
Washington, D.C. 20231
www.uspto.gov

Ms. Roberta Lee
1017 El Camino Real
PMB 361
Redwood City, CA 94063

COPY MAILED

JAN 23 2003

OFFICE OF PETITIONS

In re Application of:
Roberta Lee, James W. Vetter and
Natalie Hyland
Application No. 10/155,704
Filed: May 22, 2002
Title of Invention: BREAST
STABILIZERS HAVING AN OPEN LATTICE
STRUCTURE AND IMAGING METHODS USING
SAME

LETTER

Dear Ms. Lee:

You are named as a joint inventor in the above-identified United States patent application filed under the provisions of 35 U.S.C. 116 (United States Code) and 37 CFR 1.47(a), Rules of Practice in Patent Cases. Should a patent be granted on the application you will be designated therein as a joint inventor.

As a named inventor you are entitled to inspect any paper in the file wrapper of the application, order copies of all or any part thereof (at a prepaid cost per 37 CFR 1.19) or make your position of record in the application. Alternatively, you may arrange to do any of the preceding through a registered patent attorney or agent presenting written authorization from you. If you care to join the application, counsel of record (see below) would presumably assist you. Joining in the application would entail the filing of an appropriate oath or declaration by you pursuant to 37 CFR 1.63.

Telephone inquiries regarding this communication should be directed to Petitions Attorney Derek L. Woods at (703) 305-0014. Requests for information regarding your application should be directed to the File Information Unit at (703) 308-2733. Information regarding how to pay for and order a copy of the application, or a specific paper in the application, should be directed to Certification Division at (703) 308-9726 or 1-800-972-6382 (outside the Washington D.C. area).

Derek L. Woods
Petitions Attorney
Office of Petitions
Office of the Deputy Commissioner
for Patent Examination Policy

cc: YOUNG LAW FIRM
A PROFESSIONAL CORPORATION
4370 ALPINE ROAD SUITE 106
PORTOLA VALLEY CA 94028

UNITED STATES PATENT AND TRADEMARK OFFICE

UNITED STATES DEPARTMENT OF COMMERCE
United States Patent and Trademark Office
Address: COMMISSIONER FOR PATENTS
P.O. Box 1450
Alexandria, Virginia 22313-1450
www.uspto.gov

KAGAN BINDER, PLLC
SUITE 200, MAPLE ISLAND BUILDING
221 MAIN STREET NORTH
STILLWATER, MN 55082

Mail Date: 04/26/2010

Applicant	: Brian P. Watschke	: DECISION ON REQUEST FOR
Patent Number	: 7615059	: RECALCULATION of PATENT
Issue Date	: 11/10/2009	: TERM ADJUSTMENT IN VIEW
Application No	: 10/155,710	: OF WYETH AND NOTICE OF INTENT TO
Filed	: 05/24/2002	: ISSUE CERTIFICATE OF CORRECTION
		:

The Request for Recalculation is **GRANTED** to the extent indicated.

The patent term adjustment has been determined to be **2118** days. The USPTO will *sua sponte* issue a certificate of correction reflecting the amount of PTA days determined by the recalculation.

Prior to the issuance of the certificate of correction, the USPTO will afford patentee an opportunity to be heard and request reconsideration. Accordingly, patentee has **one month or thirty (30) days**, whichever is longer, to file a request for reconsideration of this patent term adjustment calculation. See 35 U.S.C. 154(b)(3)(B)(ii) and 37 CFR 1.322(a)(4). No extensions of time will be granted under 37 CFR 1.136.

Patentee should use document code PET.OP if electronically filing a request for reconsideration of this patent term adjustment calculation. The patentee must also include the information required by 37 CFR 1.705(b)(2) and the fee required by 37 CFR 1.18(e). If patentee does not file a timely request for reconsideration of this patent term adjustment calculation including the information required by 37 CFR 1.705(b)(2) and the fee required by 37 CFR 1.18(e), the USPTO will issue a certificate of correction reflecting the PTA determination noted above.

Patentee should be aware that in order to preserve the right to review in the United States District Court for the District of Columbia of the USPTO patent term adjustment determination, patentee must ensure that he or she also take the steps required under 35 U.S.C. 154(b)(4)(A) in a timely manner. Nothing in the request for recalculation should be construed as providing an alternative time frame for commencing a civil action under 35 U.S.C. 154(b)(4)(A).

Any questions concerning this decision should be directed to the Office of Patent Legal Administration at 571-272-7702.

UNITED STATES PATENT AND TRADEMARK OFFICE

Commissioner for Patents
United States Patent and Trademark Office
P.O. Box 1450
Alexandria, VA 22313-1450
www.uspto.gov

COPY MAILED

NOV 0 6 2009

OFFICE OF PETITIONS

LEWIS AND ROCA LLP
1663 HWY 395, SUITE 201
MINDEN NV 89423

In re Application of	:	
Colleen A. HOAR	:	
Application No. 10/155,733	:	DECISION ON PETITION
Filed: May 28, 2002	:	
Attorney Docket No. USPS-038	:	

This is a decision on the petition under the unintentional provisions of 37 CFR 1.137(b), filed August 25, 2009, to revive the above-identified application.

The petition is **GRANTED**.

The application became abandoned for failure to reply in a timely manner to the non-final Office action mailed, February 12, 2009, which set a shortened statutory period for reply of three (3) months. A three month extension of time under the provisions of 37 CFR 1.136(a) was obtained. Accordingly, the application became abandoned on May 13, 2009.

The petition satisfies the conditions for revival pursuant to the provisions of 37 CFR 1.137(b) in that (1) the reply in the form of amendment; (2) the petition fee of $810.00; and (3) the required statement of unintentional delay have been received. Accordingly, the reply to the non-final Office action of February 12, 2009 is accepted as having been unintentionally delayed.

It is not apparent whether the person signing the statement of unintentional delay was in a position to have firsthand or direct knowledge of the facts and circumstances of the delay at issue. Nevertheless, such statement is being treated as having been made as the result of a reasonable inquiry into the facts and circumstances of such delay. See 37 CFR 10.18(b) and Changes to Patent Practice and Procedure; Final Rule Notice, 62 Fed. Reg. 53131, 53178 (October 10, 1997), 1203 Off. Gaz. Pat. Office 63, 103 (October 21, 1997). In the event that such an inquiry has not been made, petitioner must make such an inquiry. If such inquiry results in the discovery that it is not correct that the entire delay in filing the required reply from the due date for the reply until the filing of a grantable petition pursuant to 37 CFR 1.137(b) was unintentional, petitioner must notify the Office.

There is no indication that the person signing the petition was ever given a power of attorney to prosecute the application. If the person signing the petition desires to receive future correspondence regarding this application, the appropriate power of attorney document must be submitted. While a courtesy copy of this decision is being mailed to the person signing the petition, all future correspondence will be directed to the address currently of record until appropriate instructions are received.

Telephone inquiries concerning this decision should be directed to the undersigned at (571) 272-4231.

The application file is being referred to Technology Center AU 3689 for appropriate action on the concurrently filed amendment.

Michelle R. Eason

Michelle R. Eason
Paralegal Specialist
Office of Petitions

SPE RESPONSE FOR CERTIFICATE OF CORRECTION

Paper No.: _____

DATE : February 27, 2007

TO SPE OF : ART UNIT 1632

SUBJECT : Request for Certificate of Correction for Appl. No. 10/155761 patent No.: 7056724

Please respond to this request for a certificate of correction within 7 days.

Please review the requested changes/corrections as shown in the **COCIN** document(s) in the IFW application image. No new matter should be introduced, nor should the scope or meaning of the claims be changed.

Please complete the response (see below) and forward the completed response to scanning using document code **COCX**.

Magdalene Talley

Certificates of Correction Branch

703-308-9390 ext. 116

Thank You For Your Assistance

The request for issuing the above-identified correction(s) is hereby:

Note your decision on the appropriate box.

- ☒ **Approved** — All changes apply.
- ☐ **Approved in Part** — Specify below which changes **do not** apply.
- ☐ **Denied** — State the reasons for denial below.

Comments: _____

SPE

1632

Art Unit

SPE RESPONSE FOR CERTIFICATE OF CORRECTION

Paper No.: _____

DATE : 12/2/05

TO SPE OF : ART UNIT 2872

SUBJECT : Request for Certificate of Correction on Patent No.: 6813025

A response is requested with respect to the accompanying request for a certificate of correction.

Please complete this form and return with file, within 7 days to:
Palm location **7580, Certificates of Correction Branch – South Tower – 9A22**
If response is for an IFW, **return to employee (named below) via PUBSCofC Team in MADRAS.**
With respect to the change(s) requested, correcting Office and/or Applicant's errors, should the patent read as shown in the certificate of correction (COCIN)? No new matter should be introduced, nor should the scope or meaning of the claims be changed.

Valerie Jackson

Thank You For Your Assistance

Certificates of Correction Branch
Tel. No. 703-308-9390 ext. 114

The request for issuing the above-identified correction(s) is hereby:
Note your decision on the appropriate box.

- ☑ **Approved** — All changes apply.
- ☐ **Approved in Part** — Specify below which changes **do not** apply.
- ☐ **Denied** — State the reasons for denial below.

Comments:

Please correct the figures 4 and 5 of the Patent with corrected figures 4 and 5 as filed in the Request for correction filed on Nov 10, 2005.

DREW A. DUNN
SUPERVISORY PATENT EXAMINER

SPE

2872
Art Unit

UNITED STATES PATENT AND TRADEMARK OFFICE

COMMISSIONER FOR PATENTS
UNITED STATES PATENT AND TRADEMARK OFFICE
P.O. BOX 1450
ALEXANDRIA, VA 22313-1450
www.uspto.gov

BOZICEVIC, FIELD & FRANCIS LLP
200 MIDDLEFIELD RD
SUITE 200
MENLO PARK CA 94025

COPY MAILED

OCT 2 2 2003

OFFICE OF PETITIONS

In re Application of
Lukyanov et al.
Application No. 10/155,809
Filed: May 24, 2002
For: KINDLING FLUORESCENT PROTEINS AND METHODS FOR THEIR USE
Attorney Docket No: CLON-073
Pub. No.: US 20032/0092884 A1
Pub. Date: May 15, 2003

This is a decision on the request for corrected patent application publication under 37 CFR 1.221(b), filed on July 28, 2003 for the above-identified application.

The request is DISMISSED.

The instant request is that the application be republished because the patent application publication omits some of the priority information.

37 CFR 1.221(b) is applicable "only when the Office makes a material mistake which is apparent from Office records . . . Any request for a corrected publication or revised patent application publication other than provided as provided in paragraph (a) of this section must be filed within two months from the date of the patent application publication. This period is not extendable." A material mistake must affect the public's ability to appreciate the technical disclosure of the patent application publication, to determine the scope of the patent application publication, or to determine the scope of the provisional rights that an applicant may seek to enforce upon issuance of a patent.[1] The request for corrected publication received on August 25, 2003, was not timely filed under 37 CFR 1.221(b).

The benefit claim to several earlier filed provisional applications and nonprovisional applications included in the application data sheet (ADS) and in the specification do not comply with 35 U.S.C. 120 and 37 CFR 1.78. On December 19, 2002, applicant requested a corrected filing receipt, however, since the benefit claim was not properly made or filed within the later of four months from the actual filing date of the application or sixteen months from the filing date of the prior application, the benefit to the earlier filed applications is considered to have been waived by applicant. In order to make a late benefit claim to the earlier filed applications, applicant must submit a petition to accept an unintentionally delayed claim under 35 U.S.C. 119(e) and 120 for the benefit of the earlier filed applications. The petition must include 1) the surcharge ($1330) set forth in 37 CFR 1.14(t) and 2) a statement that the entire delay between the date the claim was

[1] Changes to Implement Eighteen-Month Publication of Patent Applications, 65 FR 57023, 57038 (Sept. 20, 2000), 1239 Off. Gaz. Pat. Office Notices 63, 75 (Oct. 10, 2000) (final rule).

due under paragraph (a)(5) of this section and the date the claim was filed was unintentional. The petition must also include a proper reference (amendment) to the prior applications in order for the petition to be granted.[2] The priority information submitted on December 19, 2002, has been removed from the Office system and a Corrected Filing Receipt is enclosed.

The applicant is advised that a "request for republication of an application previously published" may be filed under 37 CFR 1.221(a). Such a request for republication "must include a copy of the application in compliance with the Office's electronic filing system requirements and be accompanied by the publication fee set forth in § 1.18(d) and the processing fee set forth in § 1.17(i)." If the request for republication does not comply with the electronic filing system requirements, the republication will not take place and the publication fee set forth in § 1.18(d) will be refunded. The processing fee will be retained.

Any request for republication under 37 CFR 1.221(b), should be submitted via the EFS system and questions or request for reconsideration of this decision, should be addressed as follows:

By mail to: Mail Stop PGPUB
Commissioner for Patents
P.O. Box 1450
Alexandria, VA 22313-1450

By facsimile: 703-305-8568

Inquires concerning this communication should be directed to Mark Polutta at (703) 308-8122 (voice) or (703) 746-3465 (facsimile).

Mark O. Polutta
Office of Patent Legal Administration
Office of the Deputy Commissioner
for Patent Examination Policy

Enclosure: Corrected Filing Receipt

[2]See Claiming the Benefit of a Prior-Filed Application under 35 U.S.C. §§ 119(e), 120, 121, and 365(c), 1268 Off. Gaz. Pat. Office Notices 89 (March 18, 2003).

UNITED STATES PATENT AND TRADEMARK OFFICE

COMMISSIONER FOR PATENTS
UNITED STATES PATENT AND TRADEMARK OFFICE
P.O. BOX 1450
ALEXANDRIA, VA 22313-1450
WWW.USPTO.GOV

Paper No. 9

IPSG P.C.
P.O. BOX 700640
SAN JOSE, CA 95170-0640

COPY MAILED

SEP 2 3 2003

OFFICE OF PETITIONS

In re Application of :
Jason Ivan et al :
Application No. 10/155,814 : ON PETITION
Filed: May 23, 2002 :
Attorney Docket No. ATEC-P006/DSC-005A :

This is a decision on the petition under 37 CFR 1.137(b), filed September 8, 2003, to revive the above-identified application.

The petition is **GRANTED**.

The above-identified application became abandoned for failure to reply in a timely manner to the Notice to File Missing Parts of Nonprovisional Application (Notice) mailed July 5, 2002. The Notice set a period for reply of two (2) months from the mail date of the Notice. No extensions of time under the provisions of 37 CFR 1.136(a) were obtained. Accordingly, the above-identified application became abandoned on September 6, 2002.

Telephone inquiries concerning this decision should be directed to Wan Laymon at (703) 305-9282.

The application file is being forwarded to the Office of Initial Patent Examination.

Wan Laymon

Wan Laymon
Petitions Examiner
Office of Petitions
Office of the Deputy Commissioner
for Patent Examination Policy

UNITED STATES PATENT AND TRADEMARK OFFICE

COMMISSIONER FOR PATENTS
UNITED STATES PATENT AND TRADEMARK OFFICE
P.O. BOX 1450
ALEXANDRIA, VA 22313-1450
www.uspto.gov

INNOVATION PARTNERS
540 UNIVERSITY DRIVE
SUITE 300
PALO ALTO, CA 94301

COPY MAILED
OCT 1 9 2005
OFFICE OF PETITIONS

In re Application of	:	
Martin Erlichman	:	DECISION ON PETITION
Application No. 10/155,820	:	TO MAKE SPECIAL UNDER
Filed: May 24, 2002	:	37 CFR 1.102(c)(1)
Attorney Docket No. 1305	:	

This is a decision on the petition under 37 CFR 1.102(c)(1), filed September 12, 2005, to make the above-identified application special based on applicant's age as set forth in M.P.E.P. § 708.02, Section IV.

The petition is **GRANTED**.

A grantable petition to make an application special under 37 CFR 1.102(c)(1) and MPEP § 708.02, Section IV: Applicant's Age must be accompanied by evidence showing that at least one of the applicants is 65 years of age, or more, such as a birth certificate or a statement by applicant. No fee is required

The instant petition includes a declaration by Martin Erlichman attesting that he is over 65 years of age. Accordingly, the above-identified application has been accorded "special" status.

Telephone inquiries concerning this decision should be directed to Wan Laymon at 571-272-3220.

All other inquiries concerning either the examination or status of the application should be directed to the Technology Center.

This matter is being referred to the Technology Center Art Unit 3714 for action on the merits commensurate with this decision.

Denise Pothier
Petitions Examiner
Office of Petitions

UNITED STATES PATENT AND TRADEMARK OFFICE

Commissioner for Patents
United States Patent and Trademark Office
P.O. Box 1450
Alexandria, VA 22313-1450
www.uspto.gov

DAVID G. HENRY
P.O. BOX 1470
WACO TX 76701

COPY MAILED

MAR 17 2005

OFFICE OF PETITIONS

In re Application of
Thomas J. Slaga
Application No. 10/155,843
Filed: May 24, 2002
Attorney Docket No. Silibinin-Derivs.

DECISION GRANTING PETITION UNDER 37 CFR 1.137(b)

This is a decision on the petition under 37 CFR 1.137(b), filed October 25, 2004, to revive the above-identified application.

The petition is **GRANTED**.

The petition satisfies the conditions for revival pursuant to the provisions of 37 CFR 1.137(b) in that (1) the reply in the form of an amendment; (2) the petition fee; and (3) the required statement of unintentional delay have been received. Accordingly, the reply to the nonfinal Office action of December 17, 2003, is accepted as having been unintentionally delayed.

There is no indication that the person signing the instant petition was ever given a power of attorney or authorization of agent to prosecute the above-identified application. If the person signing the instant petition desires to receive future correspondence regarding this application, the appropriate power of attorney or authorization of agent must be submitted. While a courtesy copy of this decision is being mailed to the person signing the instant petition, all future correspondence will be directed to the address currently of record until such time as appropriate instructions are received to the contrary.

Telephone inquiries concerning this decision should be directed to the undersigned at (571) 272-3208.

This matter is being referred to Technology Center AU 1654.

Karen Creasy

Karen Creasy
Petitions Examiner
Office of Petitions
Office of the Deputy Commissioner
for Patent Examination Policy

cc:
ROBERT GREESON
900 WASHINGTON AVE.
7TH FLOOR
WACO TX 76706

UNITED STATES PATENT AND TRADEMARK OFFICE

COMMISSIONER FOR PATENTS
UNITED STATES PATENT AND TRADEMARK OFFICE
P.O. BOX 1450
ALEXANDRIA, VA 22313-1450
www.uspto.gov

Paper No. 12

POULSEN ROSER PACIFIC, INC.
620 S. FRONT STREET
CENTRAL POINT, OR 97502

COPY MAILED
MAR 22 2004
OFFICE OF PETITIONS

In re Application of
Olesen et al.
Application No. 10/155,849
Filed: May 24, 2002
Attorney Docket No. POULFELD

ON PETITION

This is a decision on the petition under 37 CFR 1.137(b), filed March 3, 2004, to revive the above-identified application.

The petition is **DISMISSED**.

Any request for reconsideration must be submitted within TWO (2) MONTHS from the mail date of this decision. No further petition fee is required for the request. Extensions of time under 37 CFR 1.136(a) are permitted. The reconsideration request should include a cover letter entitled "Renewed Petition under 37 CFR 1.137(b)." This is **not** a final agency action within the meaning of 5 U.S.C. § 704.

This application became abandoned for failure to timely reply to the non-final Office action mailed April 8, 2003. No extensions of time under the provisions of 37 CFR 1.136(a) were obtained. Accordingly, this application became abandoned on July 9, 2003. A Notice of Abandonment was mailed December 3, 2003.

A grantable petition under 37 CFR 1.137(b) must be accompanied by:
(1) the required reply,[1]
(2) the petition fee,
(3) a statement that the entire delay in filing the required reply from the due date for the reply until the filing of a grantable petition pursuant to 37 CFR 1.137(b) was unintentional, and
(4) a terminal disclaimer and fee if the application was filed on or before June 8, 1995 or if the application is a design application.

Where there is a question as to whether either the abandonment or the delay in filing a petition under 37 CFR 1.137 was unintentional, the Commissioner may require additional information.[2]

---

[1] In a nonprovisional application abandoned for failure to prosecute, the required reply may be met by the filing of a continuing application. In an application or patent, abandoned or lapsed for failure to pay the issue fee or any portion thereof, the required reply must be the payment of the issue fee or any outstanding balance thereof.

[2] See MPEP 711.03(c)(III)(C) and (D).

The instant petition does not lack any of the above items.

However, a petition must be signed by an registered attorney or agent, by all of the inventors or by an officer of the assignee. The record fails to establish that the party signing the instant petition is a party who may sign a petition.

Further correspondence with respect to this matter should be addressed as follows:

By mail: Mail Stop PETITION
Commissioner for Patents
Post Office Box 1450
Alexandria, VA 22313-1450

Effective December 1, 2003, the Office of Petitions can no longer receive hand-carried correspondence, or facsimile transmissions of correspondence. The centralized location for hand-carried correspondence is the existing Customer Window located at:

2011 South Clark Place
Crystal Plaza 1 Lobby
Room 1B03
Arlington, VA 22202

The centralized facsimile number is **(703) 872-9306.**

Telephone inquiries should be directed to the undersigned at (703) 306-0482.

Liana Chase

Liana Chase
Petitions Examiner
Office of Petitions
Office of the Deputy Commissioner
for Patent Examination Policy

UNITED STATES PATENT AND TRADEMARK OFFICE

Commissioner for Patents
United States Patent and Trademark Office
P.O. Box 1450
Alexandria, VA 22313-1450
www.uspto.gov

Paper No. 14

POULSEN ROSER PACIFIC, INC.
620 S. FRONT STREET
CENTRAL POINT, OR 97502

COPY MAILED
MAY 0 7 2004
OFFICE OF PETITIONS

In re Application of	:	
Olesen et al.	:	
Application No. 10/155,849	:	ON PETITION
Filed: May 24, 2002	:	
Attorney Docket No. POULFELD	:	

This is a decision on the renewed petition under 37 C.F.R. § 1.137(b), filed April 27, 2004, to revive the above-identified application.

The petition is **GRANTED.**

This application became abandoned for failure to timely reply within three months to the non-final Office action mailed April 8, 2003. No extensions of time under the provisions of 37 CFR 1.136(a) were obtained. Accordingly, this application became abandoned on July 9, 2003. A Notice of Abandonment was mailed on December 3, 2003.

Petitioner has met the requirements to revive the above-identified application pursuant to 37 CFR 1.137(b).

The file is now being forwarded to Technology Center 1600 for further examination on the merits.

Telephone inquiries should be directed to the undersigned at (703) 306-0482.

Liana Chase

Liana Chase
Petitions Examiner
Office of Petitions
Office of the Deputy Commissioner
for Patent Examination Policy

UNITED STATES PATENT AND TRADEMARK OFFICE

COMMISSIONER FOR PATENTS
UNITED STATES PATENT AND TRADEMARK OFFICE
P.O. BOX 1450
ALEXANDRIA, VA 22313-1450
www.uspto.gov

Paper No. 9

POULSEN ROSER PACIFIC, INC.
620 S. FRONT STREET
CENTRAL POINT, OR 97502

COPY MAILED

MAR 2 2 2004

OFFICE OF PETITIONS

In re Application of
Olesen et al.
Application No. 10/155,860
Filed: May 24, 2002
Attorney Docket No. POULTRY

ON PETITION

This is a decision on the petition under 37 CFR 1.137(b), filed March 3, 2004, to revive the above-identified application.

The petition is **DISMISSED**.

Any request for reconsideration must be submitted within TWO (2) MONTHS from the mail date of this decision. No further petition fee is required for the request. Extensions of time under 37 CFR 1.136(a) are permitted. The reconsideration request should include a cover letter entitled "Renewed Petition under 37 CFR 1.137(b)." This is **not** a final agency action within the meaning of 5 U.S.C. § 704.

This application became abandoned for failure to timely reply to the non-final Office action mailed April 8, 2003. No extensions of time under the provisions of 37 CFR 1.136(a) were obtained. Accordingly, this application became abandoned on July 9, 2003. A Notice of Abandonment was mailed December 3, 2003.

A grantable petition under 37 CFR 1.137(b) must be accompanied by:
(1) the required reply,[1]
(2) the petition fee,
(3) a statement that the entire delay in filing the required reply from the due date for the reply until the filing of a grantable petition pursuant to 37 CFR 1.137(b) was unintentional, and
(4) a terminal disclaimer and fee if the application was filed on or before June 8, 1995 or if the application is a design application.

Where there is a question as to whether either the abandonment or the delay in filing a petition under 37 CFR 1.137 was unintentional, the Commissioner may require additional information.[2]

---

[1] In a nonprovisional application abandoned for failure to prosecute, the required reply may be met by the filing of a continuing application. In an application or patent, abandoned or lapsed for failure to pay the issue fee or any portion thereof, the required reply must be the payment of the issue fee or any outstanding balance thereof.

[2] See MPEP 711.03(c)(III)(C) and (D).

The instant petition does not lack any of the above items.

However, a petition must be signed by an registered attorney or agent, by all of the inventors or by an officer of the assignee. The record fails to establish that the party signing the instant petition is a party who may sign a petition.

Further correspondence with respect to this matter should be addressed as follows:

By mail: Mail Stop PETITION
Commissioner for Patents
Post Office Box 1450
Alexandria, VA 22313-1450

Effective December 1, 2003, the Office of Petitions can no longer receive hand-carried correspondence, or facsimile transmissions of correspondence. The centralized location for hand-carried correspondence is the existing Customer Window located at:

2011 South Clark Place
Crystal Plaza 1 Lobby
Room 1B03
Arlington, VA 22202

The centralized facsimile number is **(703) 872-9306.**

Telephone inquiries should be directed to the undersigned at (703) 306-0482.

Liana Chase
Petitions Examiner
Office of Petitions
Office of the Deputy Commissioner
for Patent Examination Policy

UNITED STATES PATENT AND TRADEMARK OFFICE

Commissioner for Patents
United States Patent and Trademark Office
P.O. Box 1450
Alexandria, VA 22313-1450
www.uspto.gov

Paper No. 11

POULSEN ROSER PACIFIC, INC.
620 S. FRONT STREET
CENTRAL POINT, OR 97502

COPY MAILED
MAY 0 7 2004
OFFICE OF PETITIONS

In re Application of	:	
Olesen et al.	:	
Application No. 10/155,860	:	ON PETITION
Filed: May 24, 2002	:	
Attorney Docket No. POULTRY	:	

This is a decision on the renewed petition under 37 C.F.R. § 1.137(b), filed April 27, 2004, to revive the above-identified application.

The petition is **GRANTED.**

This application became abandoned for failure to timely reply within three months to the non-final Office action mailed April 8, 2003. No extensions of time under the provisions of 37 CFR 1.136(a) were obtained. Accordingly, this application became abandoned on July 9, 2003. A Notice of Abandonment was mailed on December 3, 2003.

Petitioner has met the requirements to revive the above-identified application pursuant to 37 CFR 1.137(b).

The file is now being forwarded to Technology Center 1600 for further examination on the merits.

Telephone inquiries should be directed to the undersigned at (703) 306-0482.

Liana Chase
Petitions Examiner
Office of Petitions
Office of the Deputy Commissioner
for Patent Examination Policy

UNITED STATES PATENT AND TRADEMARK OFFICE

Commissioner for Patents
United States Patent and Trademark Office
P.O. Box 1450
Alexandria, VA 22313-1450
www.uspto.gov

TOWNSEND AND TOWNSEND
AND CREW, LLP
TWO EMBARCADERO CENTER
EIGHTH FLOOR
SAN FRANCISCO, CA 94111-3834

COPY MAILED

JUN 05 2007

OFFICE OF PETITIONS

In re Application of	:	
Frank CORSINI, et al	:	
Application No. 10/155,865	:	DECISION ON PETITION
Filed: May 24, 2002	:	TO WITHDRAW
Attorney Docket No. 021162-000120US	:	FROM RECORD
	:	

This is a decision on the Request to Withdraw as attorney or agent of record under 37 C.F.R. § 1.36(b), filed February 26, 2007.

The request is **APPROVED**.

A grantable request to withdraw as attorney/agent of record must be signed by every attorney/agent seeking to withdraw or contain a clear indication that one attorney is signing on behalf of another/others. A request to withdraw will not be approved unless at least 30 (thirty) days would remain between the date of approval and the later of the expiration date of a time to file a response or the expiration date of the maximum time period which can be extended under 37 C.F.R. § 1.136(a).

The request was signed by Philip H. Albert on behalf of all attorneys of record who are associated with customer No. 20350.

All attorneys/agents associated with the Customer Number 20350 have been withdrawn.

Applicant is reminded that there is no attorney of record at this time.

All future communications from the Office will be directed to the first named signing inventor at the address below until otherwise properly notified by the applicant.

Telephone inquiries concerning this decision should be directed to Diane Goodwyn at 571-272-6735.

There is an outstanding Office action mailed January 5, 2007 that requires a reply by the applicant.

April Wise
Petitions Examiner
Office of Petitions

cc: FRANK CORSINI
NXT LLC
14 BEACH ROAD
APARTMENT J
BELVEDERE, CA 94920

UNITED STATES PATENT AND TRADEMARK OFFICE

UNITED STATES DEPARTMENT OF COMMERCE
United States Patent and Trademark Office
Address: COMMISSIONER FOR PATENTS
P.O. Box 1450
Alexandria, Virginia 22313-1450
www.uspto.gov

APPLICATION NUMBER	FILING OR 371 (c) DATE	FIRST NAMED APPLICANT	ATTY. DOCKET NO./TITLE
10/155,865	05/24/2002	Frank Corsini	021162-000120US

CONFIRMATION NO. 1213

OC000000023595399

20350
TOWNSEND AND TOWNSEND AND CREW, LLP
TWO EMBARCADERO CENTER
EIGHTH FLOOR
SAN FRANCISCO, CA 94111-3834

Date Mailed: 04/30/2007

NOTICE REGARDING CHANGE OF POWER OF ATTORNEY

This is in response to the Power of Attorney filed 02/26/2007.

- The withdrawal as attorney in this application has been accepted. Future correspondence will be mailed to the new address of record. 37 CFR 1.33.

Office of Initial Patent Examination (571) 272-4000, or 1-800-PTO-9199
FORMER ATTORNEY/AGENT COPY

UNITED STATES PATENT AND TRADEMARK OFFICE

UNITED STATES DEPARTMENT OF COMMERCE
United States Patent and Trademark Office
Address: COMMISSIONER FOR PATENTS
P.O. Box 1450
Alexandria, Virginia 22313-1450
www.uspto.gov

ROBINS & PASTERNAK
1731 EMBARCADERO ROAD
SUITE 230
PALO ALTO, CA 94303

Mail Date: 04/21/2010

Applicant	: Volker Gerdts	: DECISION ON REQUEST FOR
Patent Number	: 6946448	: RECALCULATION of PATENT
Issue Date	: 09/20/2005	: TERM ADJUSTMENT IN VIEW
Appliction No	: 10/155,867	: OF WYETH
Filed	: 05/23/2002	:
		:

The Patentee's Request for Recalculation is **DISMISSED.**

This Request is deemed ineligible for consideration for one or more of the following reasons:

(A). The patent for which PTA recalculation is requested is either a design or reissue application or is a reexamination proceeding;

(B). The patent for which PTA recalculation is requested resulted from a utility or plant application filed under 35 USC 111(a) before May 29, 2000 and no CPA filed in the application on/after May 29, 2000;

(C). The patent for which PTA recalculation is requested resulted from an international application in which the international filing date was before May 29, 2000 and no CPA filed in the application on/after May 29, 2000;

(D). The patent for which PTA recalculation is requested issued on/after March 2, 2010;

(E). The Request for Recalculation was filed more than 180 days after the grant date of the patent and the request was not filed within two months of a dismissal of a request for reconsideration of the of the patent term under 37 CFR 1.705(d);

(F). The Request for Recalculation is not solely limited to USPTO pre-Wyeth interpretation of 35 U.S.C. 154(b)(2)(A);

or

(G). A civil action was filed pursuant to 35 U.S.C. 154(b)(4)(A)concerning the same patent at issue in this request.

Patentee may file a reply to this decision dismissing the Request for Recalculation. Patentee must file such reply within one month or thirty days, whichever is longer, of the mail date of the decision dismissing the Request for Recalculation. No fee is required if patentee is asserting in the reply that the dismissal for ineligibility is improper.

Patentee should use document code PET.OP if electronically filing a reply to this dismissal. If the USPTO finds that the request was improperly deemed ineligible, the USPTO will mail applicant a recalculation determination.

Patentee should be aware that in order to preserve the right to review in the United States District Court for the District of Columbia of the USPTO patent term adjustment determination, patentee must ensure that he or she also take the steps required under 35 U.S.C. 154(b)(4)(A). Nothing in the request for recalculation should be construed as providing an alternative time frame for commencing a civil action under 35 U.S.C. 154 (b)(4)(A).

Any questions concerning this decision should be directed to the Office of Patent Legal Administration at 571-272-7702.

UNITED STATES PATENT AND TRADEMARK OFFICE

UNITED STATES DEPARTMENT OF COMMERCE
United States Patent and Trademark Office
Address: COMMISSIONER FOR PATENTS
P.O. Box 1450
Alexandria, Virginia 22313-1450
www.uspto.gov

NORMA E HENDERSON
HENDERSON PATENT LAW
13 JEFFERSON DR
LONDONDERRY, NH 03053

Mail Date: 04/21/2010

Applicant	: Joseph A. Paradiso	: DECISION ON REQUEST FOR
Patent Number	: 7643015	: RECALCULATION of PATENT
Issue Date	: 01/05/2010	: TERM ADJUSTMENT IN VIEW
Appliction No	: 10/155,874	: OF WYETH AND NOTICE OF INTENT TO
Filed	: 05/24/2002	: ISSUE CERTIFICATE OF CORRECTION
		:

The Request for Recalculation is **GRANTED** to the extent indicated.

The patent term adjustment has been determined to be **1740** days. The USPTO will *sua sponte* issue a certificate of correction reflecting the amount of PTA days determined by the recalculation.

Prior to the issuance of the certificate of correction, the USPTO will afford patentee an opportunity to be heard and request reconsideration. Accordingly, patentee has **one month or thirty (30) days**, whichever is longer, to file a request for reconsideration of this patent term adjustment calculation. See 35 U.S.C. 154(b)(3)(B)(ii) and 37 CFR 1.322(a)(4). No extensions of time will be granted under 37 CFR 1.136.

Patentee should use document code PET.OP if electronically filing a request for reconsideration of this patent term adjustment calculation. The patentee must also include the information required by 37 CFR 1.705(b)(2) and the fee required by 37 CFR 1.18(e). If patentee does not file a timely request for reconsideration of this patent term adjustment calculation including the information required by 37 CFR 1.705(b)(2) and the fee required by 37 CFR 1.18(e), the USPTO will issue a certificate of correction reflecting the PTA determination noted above.

Patentee should be aware that in order to preserve the right to review in the United States District Court for the District of Columbia of the USPTO patent term adjustment determination, patentee must ensure that he or she also take the steps required under 35 U.S.C. 154(b)(4)(A) in a timely manner. Nothing in the request for recalculation should be construed as providing an alternative time frame for commencing a civil action under 35 U.S.C. 154(b)(4)(A).

Any questions concerning this decision should be directed to the Office of Patent Legal Administration at 571-272-7702.

UNITED STATES PATENT AND TRADEMARK OFFICE

COMMISSIONER FOR PATENTS
UNITED STATES PATENT AND TRADEMARK OFFICE
P.O. BOX 1450
ALEXANDRIA, VA 22313-1450
www.uspto.gov

HARNESS, DICKEY & PIERCE, P.L.C.
P.O. BOX 828
BLOOMFIELD HILLS, MI 48303

COPY MAILED

AUG 29 2005

OFFICE OF PETITIONS

In re Application of	:	
Akira Morita	:	
Application No. 10/155,889	:	ON PETITION
Filed: May 23, 2002	:	
Attorney Docket No.: 93191-000363	:	
	:	

This is a decision on the petition, filed August 19, 2005, under 37 CFR 1.313(c)(2) to withdraw the above-identified application from issue after payment of the issue fee.

The petition is **GRANTED**.

The above-identified application is withdrawn from issue for consideration of a submission under 37 CFR 1.114 (request for continued examination). See 37 CFR 1.313(c)(2).

Petitioner is advised that the issue fee paid on July 20, 2005, in the above-identified application, cannot be refunded. If, however, the above-identified application is again allowed, petitioner may request that it be applied towards the issue fee required by the new Notice of Allowance. [1]

Telephone inquiries relating to this decision should be directed to the undersigned at (571) 272-3204.

The application is being referred to Technology Center AU 1756 for further processing of the request for continued examination under 37 CFR 1.114.

Sherry D. Brinkley
Petitions Examiner
Office of Petitions

[1]The request to apply the issue fee to the new Notice may be satisfied by completing and returning the new Issue Fee Transmittal Form PTOL-85(b), which includes the following language thereon: "Commissioner for Patents is requested to apply the Issue Fee and Publication Fee (if any) or re-apply any previously paid issue fee to the application identified above." Petitioner is advised that, whether a fee is indicated as being due or not, the Issue Fee Transmittal Form **must** be completed and timely submitted to avoid abandonment. Note the language in bold text on the first page of the Notice of Allowance and Fee(s) Due (PTOL-85).

UNITED STATES PATENT AND TRADEMARK OFFICE

Commissioner for Patents
United States Patent and Trademark Office
P.O. Box 1450
Alexandria, VA 22313-1450
www.uspto.gov

Date : August 29, 2005

TO : Director, Office of Patent Publication

FROM : Office of the Deputy Commissioner for Patent Examination Policy

SUBJECT : Withdrawal from Issue of

Applicant(s) : Akira Morita
Application No. : 10/155,889
Filed : May 23, 2002

The above-identified application has been assigned Patent No. 6,940,499 and an issue date of September 6, 2005.

It is hereby directed that this application be withdrawn from issue at the request of the applicant.

Do not refund the issue fee.

The following erratum should be published in the Official Gazette if the above-identified application is published in the OG of September 6, 2005:

> "All reference to Patent No. 6,940,499 to AKIRA MORITA of JAPAN for SCAN-DRIVING CIRCUIT, DISPLAY DEVICE, ELECTRO-OPTICAL DEVICE, AND DRIVING METHOD OF THE SCAN-DRIVING CIRCUIT appearing in the Official Gazette of September 6, 2005, should be deleted since no patent was granted."

Sherry D. Brinkley
Petitions Examiner
Office of Petitions
Office of the Deputy Commissioner
for Patent Examination Policy

cc: Paul Harrison, Crystal Park 3-44l (FAX-306-2737)
Deneise Boyd, Crystal Park 2, Suite 1100 (FAX-308-5413)
Mary Louise McAskill, Crystal Park 3-910 (FAX 305-4372)
Niomi Farmer, Crystal Park 3-9l0 (FAX-305-4372)
Mary E. Johnson (Cookie), P/OCS, CM1-6D07
Duane K.Davis, P/OCS, CM1-6A07
Tamara K. Greene, PK3-910

UNITED STATES PATENT AND TRADEMARK OFFICE

COMMISSIONER FOR PATENTS
UNITED STATES PATENT AND TRADEMARK OFFICE
WASHINGTON, D.C. 20231
www.uspto.gov

Paper No. 5

COPY MAILED

OCT 17 2002

OFFICE OF PETITIONS

Pacific Law Group, LLP
7394 Wildflower Way
Cupertino, CA 95014

In re Application of
Shirk, et al.
Application No. 10/155,899
Filed: September 3, 2002
Attorney Docket No.: 2107-21
For: FOLDED WAVEGUIDE OPTICAL DEVICES

DECISION ACCORDING STATUS UNDER 37 CFR 1.47(a)

This is in response to the petition under 37 CFR 1.47(a), filed August 26, 2002 (Certificate of Mailing date of August 19, 2002).

The petition is **GRANTED**.

Petitioner has shown that inventor Kevin W. Shirk has refused to join in the filing of the above-identified application after having been presented with the application papers.

The above-identified application and papers have been reviewed and found in compliance with 37 CFR 1.47(a). This application is hereby accorded Rule 1.47(a) status.

As provided in Rule 1.47(c), this Office will forward notice of this application's filing to the non-signing inventor at the address given in the petition. Notice of the filing of this application will also be published in the Official Gazette.

After this decision is mailed, the above-identified application will be returned to the Office of Initial Patent Examination for further processing.

Telephone inquiries regarding this decision should be directed to the undersigned at (703) 305-0310.

Alesia M. Brown
Petitions Attorney
Office of Petitions
Office of the Deputy Commissioner
for Patent Examination Policy

ENJ/1632

OIPE AUG 10 2005 PATENT & TRADEMARK OFFICE

USSN 10/155,904 Atty. Dkt. No. 028040-5205

IN THE UNITED STATES PATENT AND TRADEMARK OFFICE

Applicants: STRELCHENKO et al.

Title: METHOD OF CLONING ANIMALS

Appl. No.: 10/155,904

Filing Date: 5/22/2002

Examiner: Deborah Crouch, Ph.D.

Art Unit: 1632

CERTIFICATE OF MAILING
I hereby certify that this correspondence is being deposited with the United States Postal Service with sufficient postage as First Class Mail in an envelope addressed to: Mail Stop AMENDMENT, Commissioner for Patents, P.O. Box 1450, Alexandria, VA 22313-1450, on the date below.

Joseph P. Meara
(Printed Name)

Joseph P. Meara
(Signature)

August 8, 2005
(Date of Deposit)

WD 09/22/05

APPROVED

REQUEST FOR WITHDRAWAL AS ATTORNEY OR AGENT

Commissioner for Patents
P.O. Box 1450
Alexandria, VA 22313-1450

Dear Sir:

The firm of Foley & Lardner LLP, through the undersigned attorney, applies to withdraw as attorney of record regarding the above-referenced patent application. The reason for this request is failure by client to pay attorneys' fees. It is our understanding that the assignee is going out of business or is no longer in business.

Please change the correspondence address and direct all future correspondence to: Mr. Walter Simson, Chief Executive Officer, Infigen, Inc., 1825 Infinity Way, DeForest, Wisconsin 53532. His last known telephone numbers are (608) 824-0286 (home) and (608) 347-0190 (cell); and his e-mail address is walter.simson@tds.net.

The firm of Foley & Lardner has taken reasonable steps to avoid foreseeable prejudice to the rights of the client, including giving due notice to the client, allowing time for the employment of another practitioner, and attempting to deliver to the client all papers and property to which the client is entitled. An Official Action concerning the above-referenced application was issued by the Patent and Trademark Office on April 28, 2005. There are at least

30 days between approval of this Withdrawal and the expiration date of the period of which can be obtained by a petition and fee for extension of time under 37 C.F.R. §1.136(a).

The undersigned believes no fee is due for this filing, however the Commissioner is hereby authorized to charge any fee for this filing to Deposit Account No. 50-2350. For the purpose of charging said deposit account, a duplicate copy of this Request is enclosed.

Respectfully submitted,

Date August 8, 2005

By Joseph P Meara

FOLEY & LARDNER LLP
Customer Number: 23524
Telephone: (608) 258-4303
Facsimile: (608) 258-4258

Joseph P. Meara
Attorney for Applicants
Registration No. 44,932

UNITED STATES PATENT AND TRADEMARK OFFICE

Commissioner for Patents
United States Patent and Trademark Office
P.O. Box 1450
Alexandria, VA 22313-1450
www.uspto.gov

WHYTE HIRSCHBOECK DUDEK SC
ONE EAST MAIN STREET
SUITE 300
MADISON WI 53703-3300

COPY MAILED
MAR 26 2007
OFFICE OF PETITIONS

In re Application of	:	
Strelchenko, et al.	:	
Application No. 10/155,904	:	ON PETITION
Filed: May 22, 2002	:	
Attorney Docket No. 23027-1204	:	

This is a decision on the petition to revive under 37 CFR 1.137(b), filed January 30, 2007.

The petition under 37 CFR 1.137(b) is **GRANTED**.

The above-identified application became abandoned for failure to timely file a reply in response to the non-final Office action mailed April 28, 2005. This Office action set an extendable period for reply of three (3) months. No reply having been received, the application became abandoned on July 29, 2005. A Notice of Abandonment was mailed on December 14, 2005.

With the instant petition, applicants paid the petition fee, made the proper statement of unintentional delay, and submitted the required reply in the form of a continuation application.

The above-identified application is being revived solely for purposes of continuity. As continuity has been established by this decision reviving the above-identified application, the above identified application is again abandoned in favor of the continuation application. Applicants will receive further information, including an application number and filing receipt, from the Office of Initial Patent Examination in due course.

It is not apparent whether the person signing the statement of unintentional delay was in a position to have firsthand or direct knowledge of the facts and circumstances of the delay at issue. Nevertheless, such statement is being treated as having been made as the result of a reasonable inquiry into the facts and circumstances of such delay. See 37 CFR 10.18(b) and Changes to Patent Practice and Procedure; Final Rule Notice, 62 Fed. Reg. 53131, 53178 (October 10, 1997), 1203 Off. Gaz. Pat. Office 63, 103 (October 21, 1997). In the event that such an inquiry has not been made, petitioner must make such an inquiry. If such inquiry results in the discovery that it is not correct that the entire delay in filing the required reply from the due date for the reply until the filing of a grantable petition pursuant to 37 CFR 1.137(b) was unintentional, petitioner must notify the Office.

Telephone inquiries concerning this decision should be directed to the undersigned at (571)272-3207.

Cliff Congo
Petitions Attorney
Office of Petitions

UNITED STATES PATENT AND TRADEMARK OFFICE

COMMISSIONER FOR PATENTS
UNITED STATES PATENT AND TRADEMARK OFFICE
P.O. BOX 1450
ALEXANDRIA, VA 22313-1450

MAILED

JUL 07 2004

DIRECTOR'S OFFICE
TECHNOLOGY CENTER 3600

LAW OFFICES OF RONALD M. ANDERSON
600 – 108th Avenue N.E., Suite 507
Bellevue, WA 98004

In re application of
Becket S. Dillard et al
Application No. 10/155,907
Filed: May 23, 2002
For: MANAGEMENT AND CONTROL OF ONLINE MERCHANDISING

DECISION ON REQUEST FOR WITHDRAWAL OF ATTORNEY

This is a decision on the request filed on April 16, 2004, under 37 CFR 1.36 and MPEP 402.06, requesting permission to withdraw as the attorney of record in the above-identified application.

The request is **NOT APPROVED**.

Under 37 CFR 1.36 an attorney may withdraw only upon application to and approval by the Commissioner. It should be noted that a withdrawal is effective when approved, not when filed. Besides giving due notice to his or her client and delivering to the client all papers and property to which the client is entitled as specified under 37 CFR 10.40, approval of such a request requires that the following conditions be met:

A) Each attorney of record must sign the notice of withdrawal, or the notice must contain a clear indication of one attorney signing on behalf of another, because the Office does not recognize law firms;

B) A proper reason for the withdrawal as enumerated in 37 CFR 10.40(b) or subsection (1)-(6) of 37 CFR 10.40(c) must be provided; and

C) If withdrawal is requested in accordance with 37 CFR 10.40(c) above, there must be at least 30 days between approval of the withdrawal and the later of the expiration date of a time period for reply or the expiration date of the period which can be obtained by a petition and fee for extension of time under 37 CFR 1.136(a).

The request to withdraw as attorney in the above-identified application is not approved because the request does not comply with Items (A) and (B). In the original declaration, Michael C. King and Thomas R. Marquis were also given power in this application and the request fails to list these two attorneys. If only Ronald M. Anderson is requesting to have power withdrawn and Michael C. King and Thomas R. Marquis are intended to remain having power of attorney for this case, this needs to be made clear in any supplemental request; otherwise the above-noted attorneys would need to be added to the request. Further, the client is assumed to be the inventors whose assignment is established under 37CFR 3.73(b), which requires a person having authority to sign for the assignee to provide the reel and frame numbers.

Kenneth J. Dorner
Special Programs Examiner
Patent Technology Center 3600
(703) 308-0866

KJD/pav: 6/30/04

UNITED STATES PATENT AND TRADEMARK OFFICE

UNITED STATES DEPARTMENT OF COMMERCE
United States Patent and Trademark Office
Address: COMMISSIONER FOR PATENTS
P.O. Box 1450
Alexandria, Virginia 22313-1450
www.uspto.gov

Weaver Austin Villeneuve & Sampson LLP
P.O. BOX 70250
OAKLAND, CA 94612-0250

Mail Date: 07/30/2010

Applicant	: Claudio DeSanti	: DECISION ON REQUEST FOR
Patent Number	: 7656884	: RECALCULATION of PATENT
Issue Date	: 02/02/2010	: TERM ADJUSTMENT IN VIEW
Application No	: 10/155,919	: OF WYETH AND NOTICE OF INTENT TO
Filed	: 05/24/2002	: ISSUE CERTIFICATE OF CORRECTION
		:

The Request for Recalculation is **GRANTED** to the extent indicated.

The patent term adjustment has been determined to be **2301** days. The USPTO will *sua sponte* issue a certificate of correction reflecting the amount of PTA days determined by the recalculation.

Prior to the issuance of the certificate of correction, the USPTO will afford patentee an opportunity to be heard and request reconsideration. Accordingly, patentee has **one month or thirty (30) days**, whichever is longer, to file a request for reconsideration of this patent term adjustment calculation. See 35 U.S.C. 154(b)(3)(B)(ii) and 37 CFR 1.322(a)(4). No extensions of time will be granted under 37 CFR 1.136.

Patentee should use document code PET.OP if electronically filing a request for reconsideration of this patent term adjustment calculation. The patentee must also include the information required by 37 CFR 1.705(b)(2) and the fee required by 37 CFR 1.18(e). If patentee does not file a timely request for reconsideration of this patent term adjustment calculation including the information required by 37 CFR 1.705(b)(2) and the fee required by 37 CFR 1.18(e), the USPTO will issue a certificate of correction reflecting the PTA determination noted above.

Patentee should be aware that in order to preserve the right to review in the United States District Court for the District of Columbia of the USPTO patent term adjustment determination, patentee must ensure that he or she also take the steps required under 35 U.S.C. 154(b)(4)(A) in a timely manner. Nothing in the request for recalculation should be construed as providing an alternative time frame for commencing a civil action under 35 U.S.C. 154(b)(4)(A).

Any questions concerning this decision should be directed to the Office of Patent Legal Administration at 571-272-7702.

SPE R. Pezzuto

SPE RESPONSE FOR CERTIFICATE OF CORRECTION 10/155,926

Paper No.: _____

DATE : 8/18/05

TO SPE OF : ART UNIT 3762

SUBJECT : Request for Certificate of Correction on Patent No.: 6916304

A response is requested with respect to the accompanying request for a certificate of correction.

Please complete this form and return with file, within 7 days to:
Palm location **7580, Certificates of Correction Branch – South Tower – 9A22**
If response is for an IFW, **return to employee (named below) via PUBSCofC Team in MADRAS.**
With respect to the change(s) requested, correcting Office and/or Applicant's errors, should the patent read as shown in the certificate of correction (COCIN)? No new matter should be introduced, nor should the scope or meaning of the claims be changed.

Lamonte M. Newsome

Thank You For Your Assistance

Certificates of Correction Branch
Tel. No. 703-305-8309

The request for issuing the above-identified correction(s) is hereby:
Note your decision on the appropriate box.

- [X] **Approved** — **All** changes apply.
- [ ] **Approved in Part** — Specify below which changes **do not** apply.
- [ ] **Denied** — State the reasons for denial below.

Comments:

ROBERT E. PEZZUTO
PRIMARY EXAMINER

SPE — **Art Unit** 3762

UNITED STATES PATENT AND TRADEMARK OFFICE

Commissioner for Patents
United States Patent and Trademark Office
P.O. Box 1450
Alexandria, VA 22313-1450
www.uspto.gov

Mailed: 1-23-06

NE
Paper Number _____

In re application of
Hayashi et al.
Serial No. 10/155,963
Filed: May 29, 2002
For: THERMOSETTING COMPOSITE DIELECTRIC FILM AND METHOD OF MANUFACTURING SAME

DECISION ON PETITION

This is a response to the PETITION UNDER RULE 181(a) TO WITHDRAW NOTICE OF ABANDONMENT, filed November 30, 2004. The petition requests that the abandonment, as set forth in the Notice of Abandonment mailed June 30, 2004, be withdrawn since the applicant did not receive the Notice of Allowance and Fee(s) Due letter mailed February 9, 2004.

DECISION

The instant request is accepted as a timely petition under 37 C.F.R. 1.181 (no fee), and is evaluated under the procedures regarding an acceptable showing of non-receipt of an office action, TMOG 1156 O.G. 53, November 16, 1993, (see also MPEP 711.03(c) - NEW PROCEDURE TMOG 1170 O.G. 114). A review of the petitioner's evidence indicates that the request has merit. The evidence presented is sufficient to establish that the applicant or any authorized representative of the applicant did not receive the Office letter mailed February 9, 2004. The evidence provided includes a statement by the petitioner that the Office letter mailed February 9, 2004 was not received, a statement that a search of the file and docket records was made, and a statement that the search revealed the Office letter mailed February 9, 2004 was not received. Also provided is a copy of the attorney's application docket records where the Office letter mailed February 9, 2004 would have been posted had it been timely received.

Therefore, the abandonment is hereby withdrawn, and the application is returned to pending status. The application shall be forwarded to the examiner for prompt re-mailing of the Notice of Allowance and Fee(s) Due letter originally mailed February 9, 2004 and restarting of the period of response from the re-mail date thereof. The Change of address filed February 25, 2004 shall be entered.

The Petition is **GRANTED**.

Jacqueline Stone, Director
Technology Center 1700
Chemical and Materials Engineering

TOWNSEND & BANTA
C/O PORTFOLIO IP
P.O. BOX 52050
Minneapolis, MN 55402

UNITED STATES PATENT AND TRADEMARK OFFICE

Commissioner for Patents
United States Patent and Trademark Office
P.O. Box 1450
Alexandria, VA 22313-1450
www.uspto.gov

OLIFF & BERRIDGE, PLC
P.O. BOX 19928
ALEXANDRIA, VA 22320

COPY MAILED

JUL 11 2005

OFFICE OF PETITIONS

In re Application of :
Hisanobu Ishiyama :
Application No. 10/155,972 :
Filed: May 29, 2002 :
Attorney Docket No. 112941 :

ON PETITION

This is a decision on the petition under 37 CFR 1.313 (c)(2), filed July 8, 2005, to withdraw the above-identified application from issue after payment of the issue fee.

The petition is **GRANTED**.

The above-identified application is withdrawn from issue for consideration of a submission under 37 CFR 1.114 (request for continued examination). See 37 CFR 1.313(c)(2).

Petitioner is advised that the issue fee paid on June 20, 2005 in the above-identified application cannot be refunded. If, however, the above-identified application is again allowed, petitioner may request that it be applied towards the issue fee required by the new Notice of Allowance.[1]

Telephone inquiries should be directed to Wan Laymon at (571) 272-3220.

This matter is being referred to Technology Center AU 2674 for processing of the request for continued examination under 37 CFR 1.114 and for consideration of the concurrently filed IDS.

Wan Laymon

Wan Laymon
Petitions Examiner
Office of Petitions
Office of the Deputy Commissioner
for Patent Examination Policy

---

[1] The request to apply the issue fee to the new Notice may be satisfied by completing and returning the new Issue Fee Transmittal Form PTOL-85(b), which includes the following language thereon: "Commissioner for Patents is requested to apply the Issue Fee and Publication Fee (if any) or re-apply any previously paid issue fee to the application identified above." Petitioner is advised that, whether a fee is indicated as being due or not, the Issue Fee Transmittal Form **must** be completed and timely submitted to avoid abandonment. Note the language in bold text on the first page of the Notice of Allowance and Fee(s) Due (PTOL-85).

UNITED STATES PATENT AND TRADEMARK OFFICE

COMMISSIONER FOR PATENTS
UNITED STATES PATENT AND TRADEMARK OFFICE
P.O. BOX 1450
ALEXANDRIA, VA 22313-1450
www.uspto.gov

STERNE, KESSLER, GOLDSTEIN & FOX PLLC
1100 NEW YORK AVENUE, N.W.
WASHINGTON, D.C. 20005

COPY MAILED
MAR 30 2004
OFFICE OF PETITIONS

Applicant: McClurg et al.
Appl. No.: 10/156,005
Filing Date: May 29, 2002
Title: CATADIOPTRIC LITHOGRAPHY SYSTEM AND METHOD WITH RETICLE STAGE ORTHOGONAL TO WAFER STAGE
Attorney Docket No.: 1857.0580000
Pub. No.: US 2003/0223125 A1
Pub. Date: December 4, 2003

This is in response to the request for correction of patent application publication under 37 CFR 1.221(b), which was filed on December 17, 2003.

The request is DISMISSED.

The instant request is that the application be republished because the assignee information on the front page of the patent application publication contains **a material error by the USPTO** wherein the Assignee name "ASML Holding N.V." is misprinted as "ASML US, Inc."

37 CFR 1.221(b) is applicable "only when the Office makes a material mistake which is apparent from Office records." **A material mistake must affect the public's ability to appreciate the technical disclosure of the patent application publication, to determine the scope of the patent application publication, or to determine the scope of the provisional rights that an applicant may seek to enforce upon issuance of a patent.**[1] The instant request does not identify a material mistake in the publication made by the Office:

The instant request does not identify a material mistake in the publication made by the Office. The assignment information was printed correctly on the patent application publication, as it was provided on the transmittal letter.[2] The Office prints the assignee information as reflected on the transmittal letter or application data sheet, if provided by applicant and does not look at the assignment records for the assignment information. While Applicant's representative now argues that the USPTO committed a material error in the publication of the application as it printed "ASML US, Inc.," not "ASML Holding N.V." in the assignment information on the front page of the published application, the Applicant's representative provided "ASML US, Inc." on the application transmittal letter.

On July 3, 2002, a Filing Receipt (copy enclosed) was mailed listing the assignee name as "ASML US, Inc.." To avoid this type of problem in the future, applicants' representative should make request a corrected filing receipt using the facsimile number (703-746-9195) on the Filing Receipt.

---

[1] Changes to Implement Eighteen-Month Publication of Patent Applications, 65 FR 57023, 57038 (Sept. 20, 2000), 1239 Off. Gaz. Pat. Office Notices 63, 75 (Oct. 10, 2000) (final rule).

[2] See Comment 59, Changes to Implement Eighteen-Month Publication of Patent Applications, 65 FR 57023, 57047 (Sept. 20, 2000), 1239 Off. Gaz. Pat. Office Notices 63, 84 (Oct. 10, 2000) (final rule).

Applicants' request for a corrected patent application publication on December 17, 2003, may constitute a "failure to engage in reasonable efforts to conclude processing or examination of the application." See 1.704(c). This determination will be made on or after a mailing of a Notice of Allowance.

The applicant is advised that a "request for republication of an application previously published" may be filed under 37 CFR 1.221(a). Such a request for republication "must include a copy of the application in compliance with the Office's electronic filing system requirements and be accompanied by the publication fee set forth in § 1.18(d) and the processing fee set forth in § 1.17(i)." If the request for republication does not comply with the electronic filing system requirements, the republication will not take place and the publication fee set forth in § 1.18(d) will be refunded. The processing fee will be retained.

Any request for republication under 37 CFR 1.221(b), should be submitted via the EFS system and questions or request for reconsideration of this decision, should be addressed as follows:

By mail to: Mail Stop PGPUB
Commissioner for Patents
P.O. Box 1450
Alexandria, VA 22313-1450

The application will be issued in due course.

Inquiries relating to this matter may be directed to Mark Polutta at (703) 308-8122 (voice) or (703) 746-3465 (facsimile).

Mark O. Polutta
Office of Patent Legal Administration
Office of the Deputy Commissioner
for Patent Examination Policy

Enclosure: Copy of previously mailed Filing Receipt
Corrected Filing Receipt

UNITED STATES PATENT AND TRADEMARK OFFICE

#9

COMMISSIONER FOR PATENTS
UNITED STATES PATENT AND TRADEMARK OFFICE
P.O. BOX 1450
ALEXANDRIA, VA 22313-1450
www.uspto.gov

MAILED
FROM DIRECTORS OFFICE

MAR 29 2005

TECHNOLOGY CENTER 3600

LITMAN LAW OFFICES LTD
P.O. Box 15035
Arlington, VA 22215

In re Application of
Derrell Wolford
Application No. 10/156,013
Filed: May 29, 2002
For: TREE STAND WITH ADJUSTABLE LEVELING MECHANISMS

DECISION ON PETITION TO WITHDRAW THE HOLDING OF ABANDONMENT

This is in reply to the petition to withdraw the holding of abandonment under 37 CFR 1.181, filed in the United States Patent and Trademark Office, on February 1, 2005.

The petition is **GRANTED** in view of the following evidence of timely filing :

☐ Postcard receipt being dated_____.

☐ USPTO return facsimile receipt dated _____ which identifies the application by serial number and the type of Response that was filed on that date.

☐ Certificate of Mailing/Transmission signed on _____ and supported by a statement under 37 C.F.R. 1.8(b)(3).

☒ Hand Delivery Receipt of the specific documents submitted dated March 18, 2004.

☐ Certificate of Transmission of CPA under 37 C.F.R. 1.6 filed on _____.

☐ Express Mail Receipt under 37 C.F.R. 1.10 dated _____.

This application is being forwarded to the Supervisory Legal Instruments Examiner for entry of the response filed with the petition, then to the examiner for prompt action on the response.

KJD/dgd: 3/23/05

KENNETH J. DORNER
SPECIAL PROGRAMS EXAMINER
TECHNOLOGY CENTER 3600

UNITED STATES PATENT AND TRADEMARK OFFICE

Commissioner for Patents
United States Patent and Trademark Office
P.O. Box 1450
Alexandria, VA 22313-1450
www.uspto.gov

Finnegan, Henderson, Farabow,
Garrett & Dunner, L.L.P.
1300 I Street, N.W.
Washington, DC 20005-3315

COPY MAILED

SEP 2 2 2004

OFFICE OF PETITIONS

In re Patent No. 6,727,487	:	
Issue Date: April 27, 2004	:	
Application No. 10/156,017	:	ON PETITION
Filed: May 29, 2002	:	
Attorney Docket No. 08830.0001	:	

This is a decision on the petition filed June 4, 2004, which is being treated as a petition under 37 CFR 3.81[1] to correct the assignee on the front page of the above-identified patent by way of a Certificate of Correction.

The petition is **granted**.

The file is being forwarded to the Certificates of Correction Branch for issuance of the requested Certificate of Correction.

Telephone inquiries concerning this decision should be directed to the undersigned at (703) 308-6711[2]. Questions concerning the Certificate of Correction may be directed to the Certificates of Correction Branch at (703) 305-8309.

Andrea Smith
Petitions Examiner
Office of Petitions
Office of the Deputy Commissioner
for Patent Examination Policy

---

[1]*See Official Gazette of June 22, 2004*

[2]After September 27, 2004, the telephone number will be (571) 272-3226.

UNITED STATES PATENT AND TRADEMARK OFFICE

Commissioner for Patents
United States Patent and Trademark Office
P.O. Box 1450
Alexandria, VA 22313-1450
www.uspto.gov

OLIFF & BERRIDGE, PLC
P.O. BOX 19928
ALEXANDRIA VA 22320

COPY MAILED

JUL 1 2 2005

OFFICE OF PETITIONS

In re Application of :
Hisanobu Ishiyama :
Application No. 10/156,025 :
Filed: May 29, 2002 :
Attorney Docket No. 112944 :

ON PETITION

This is a decision on the petition filed, July 8, 2005, under 37 CFR 1.181(a) to Withdraw Holding of Abandonment. This is also a decision on the petition filed, July 8, 2005[1], under 37 CFR 1.313(c)(2) to withdraw the above-identified application from issue after payment of the issue fee.

The petitions are **GRANTED**.

The application was held abandoned for failure to timely pay the issue fee on or before June 23, 2004.

The petition states that the issue fee was timely submitted on May 11, 2004. To support this assertion, the petitioner has submitted a copy of the postcard receipt showing the receipt date of May 11, 2004 in the USPTO.

In view of the above, the holding of abandonment is hereby withdrawn and the application restored to pending status. It is noted that the copy of the petition under 37 CFR 1.181(a), filed August 31, 2004 is unsigned.

As to the petition under 37 CFR 1.313(c)(2):

The above-identified application is withdrawn from issue for consideration of a submission under 37 CFR 1.114 (request for continued examination). See 37 CFR 1.313(c)(2).

Petitioner is advised that the issue fee paid on May 11, 2004 in the above-identified application cannot be refunded. If, however, the above-identified application is again allowed, petitioner may request that it be applied towards the issue fee required by the new Notice of Allowance.[2]

---

[1]Petitioner is encouraged to note 37 CFR 1.4(c).

[2] The request to apply the issue fee to the new Notice may be satisfied by completing and returning the new Issue Fee Transmittal Form PTOL-85(b), which includes the following language thereon: "Commissioner for Patents is requested to apply the Issue Fee and Publication Fee (if any) or re-apply any previously paid issue fee to the application identified above." Petitioner is advised that, whether a fee is

Telephone inquiries should be directed to the undersigned at (571) 272-3208.

The examiner of Technology Center AU 2838 will consider the request for continued examination under 37 CFR 1.114.

Karen Creasy

Karen Creasy
Petitions Examiner
Office of Petitions
Office of the Deputy Commissioner
for Patent Examination Policy

---

indicated as being due or not, the Issue Fee Transmittal Form **must** be completed and timely submitted to avoid abandonment. Note the language in bold text on the first page of the Notice of Allowance and Fee(s) Due (PTOL-85).

UNITED STATES PATENT AND TRADEMARK OFFICE

Commissioner for Patents
United States Patent and Trademark Office
P.O. Box 1450
Alexandria, VA 22313-1450
www.uspto.gov

OLIFF & BERRIDGE PLC
P O BOX 19928
ALEXANDRIA, VA 22320

COPY MAILED
NOV 24 2004
OFFICE OF PETITIONS

In re Application of
Masahiro Hara et al
Application No. 10/156,051
Filed: May 29, 2002
Attorney Docket No. 111861

: DECISION GRANTING PETITION
: UNDER 37 CFR 1.313(c)(2)

This is a decision on the petition, filed November 23, 2004, under 37 CFR 1.313(c)(2) to withdraw the above-identified application from issue after payment of the issue fee.

The petition is **GRANTED**.

The above-identified application is withdrawn from issue for consideration of a submission under 37 CFR 1.114 (request for continued examination). See 37 CFR 1.313(c)(2).

Petitioner is advised that the issue fee paid on August 10, 2004 in the above-identified application cannot be refunded. If, however, the above-identified application is again allowed, petitioner may request that it be applied towards the issue fee required by the new Notice of Allowance.[1]

Telephone inquiries should be directed to the undersigned at (571) 272-3218.

This matter is being referred to Technology Center AU 3683 for processing of the request for continued examination under 37 CFR 1.114 and for consideration of the concurrently filed Information Disclosure Statement.

Frances Hicks
Petitions Examiner
Office of Petitions
Office of the Deputy Commissioner
for Patent Examination Policy

---

[1] *The request to apply the issue fee to the new Notice may be satisfied by completing and returning the new Issue Fee Transmittal Form PTOL-85(b), which includes the following language thereon: "Commissioner for Patents is requested to apply the Issue Fee and Publication Fee (if any) or re-apply any previously paid issue fee to the application identified above." Petitioner is advised that, whether a fee is indicated as being due or not, the Issue Fee Transmittal Form* **must** *be completed and timely submitted to avoid abandonment. Note the language in bold text on the first page of the Notice of Allowance and Fee(s) Due (PTOL-85).*

UNITED STATES PATENT AND TRADEMARK OFFICE

Commissioner for Patents
United States Patent and Trademark Office
P.O. Box 1450
Alexandria, VA 22313-1450
www.uspto.gov

FITZPATRICK CELLA HARPER &
SCINTO
30 ROCKEFELLER PLAZA
NEW YORK, NY 10112

COPY MAILED

AUG 1 4 2006

OFFICE OF PETITIONS

In re Application of

Kenichi Kataoka

Application No. 10/156,056

Filed: May 29, 2002

Attorney Docket No. 03500.016455

DECISION ON PETITION

This is a decision on the petition to withdraw the holding of abandonment under 37 CFR 1.181(a), filed January 31, 2006.

The petition is **granted**.

This application was held abandoned October 2, 2005, after no reply was received to the Notice of Allowance and Issue Fee Due mailed July 1, 2005. The notice set forth a statutory period of reply of three months from its mailing date. No response was received within the allowable period and the application became abandoned on October 2, 2005. A Notice of Abandonment was mailed December 5, 2005. The instant petition was filed on January 31, 2006. Petitioner maintains that the notice of July 1, 2005, was never received and provides a copy of the relevant docketing calendar as proof of the same.

Section 711.03(c)(II) of the *Manual of Patent Examining Procedure* ("MPEP") provides that in order to establish non-receipt of an Office action so as prove that the imposition of a holding of abandonment is improper, petitioner must: 1) provide a statement to the Office indicating that the Office action was not received by petitioner; 2) include in the statement an attestation to the fact that a review of the file jacket and docket records maintained by petitioner indicates that the Office action was not received; and 3) provide a copy of the docket record where the non-received Office communication would have been entered had it been received and docketed.

Petitioner has met the burden of proof as established by Section 711.03(c)(II) of the MPEP. The holding of abandonment is, therefore, withdrawn.

The application file is being forwarded to the Office of Patent Publications for further processing that may include remailing the Notice of Allowance and Issue Fee Due and resetting of the period for reply.

Questions concerning this decision should be directed to the undersigned at (571) 272-3222.

Kenya A. McLaughlin
Petitions Attorney
Office of Petitions

UNITED STATES PATENT AND TRADEMARK OFFICE

Commissioner for Patents
United States Patent and Trademark Office
P.O. Box 1450
Alexandria, VA 22313-1450
www.uspto.gov

FLYNN THIEL BOUTELL & TANIS, P.C.
2026 RAMBLING ROAD
KALAMAZOO MI 49008-1631

COPY MAILED

DEC 11 2009

OFFICE OF PETITIONS

In re Patent No. 6,911,170	:	
Issue Date: June 28, 2005	:	
Application No. 10/156,067	:	ON PETITION
Filed: May 29, 2002	:	
Attorney Docket No. 5000.M0015US	:	

This is a notice regarding your request for acceptance of a fee deficiency submission under 37 CFR 1.28. On September 1, 1998, the Court of Appeals for the Federal Circuit held that 37 CFR 1.28(c) is the sole provision governing the time for correction of the erroneous payment of the issue fee as a small entity. **See DH Technology v. Synergystex International, Inc. 154 F.3d 1333, 47 USPQ2d 1865 (Fed. Cir. Sept. 1, 1998).**

The Office no longer investigates or rejects original or reissue applications under 37 CFR 1.56. **1098 Off. Gaz. Pat. Office 502 (January 3, 1989)**. Therefore, nothing in this Notice is intended to imply that an investigation was done.

Your fee deficiency submission under 37 CFR 1.28 is hereby **ACCEPTED**.

This patent is no longer entitled to small entity status. Accordingly, all future fees paid in this patent must be paid at the large entity rate.

Telephone inquiries concerning this decision should be directed to the undersigned at (571) 272-7751.

Joan Olszewski
Petitions Examiner
Office of Petitions

UNITED STATES PATENT AND TRADEMARK OFFICE

Commissioner for Patents
United States Patent and Trademark Office
P.O. Box 1450
Alexandria, VA 22313-1450
www.uspto.gov

FINNEGAN, HENDERSON,
FARABOW, GARRETT & DUNNER LLP
901 NEW YORK AVENUE, NW
WASHINGTON DC 20001-4413

COPY MAILED

DEC 19 2007

OFFICE OF PETITIONS

In re Application of	:	
Suita et al.	:	
Application No. 10/156069	:	DECISION
Filing or 371(c) Date: 05/29/2002	:	ON PETITION
Patent No.: 7154197	:	
Issue Date: 12/26/2006	:	
Attorney Docket No.: 7057.0026	:	

This is a decision on the correspondence entitled "Request for Certificate of Correction," filed August 23, 2007, to correct the assignee data and typographical errors on the front page of the above-identified patent by way of a Certificate of Correction. The request to correct the assignee data is properly treated as a petition under 37 CFR 3.81(b)[1]. The delay in treating this petition is regretted.

The Petition is **granted**.

The petition was accompanied by a certificate of correction as required by 3.81(b), and the fee submitted with the present petition. As the request complies with the provisions of 37 CFR 3.81(b), it would be appropriate for a certificate of correction to be processed.

Telephone inquiries concerning this matter should be directed to the undersigned at (571) 272-3232. Any questions concerning the issuance of the Certificate of Correction should be directed to the Certificate of Correction Branch at (571) 272-4200.

This matter is being referred to the Certificates of Correction Branch for processing of a certificate of correction.

Derek L. Woods
Attorney
Office of Petitions

[1] *See* MPEP 1309, subsection II; and Official Gazette of June 22, 2004.

UNITED STATES PATENT AND TRADEMARK OFFICE

COMMISSIONER FOR PATENTS
UNITED STATES PATENT AND TRADEMARK OFFICE
P.O. BOX 1450
ALEXANDRIA, VA 22313-1450
www.uspto.gov

Paper No. 5

COPY MAILED

SEP 05 2003

OFFICE OF PETITIONS

FELIX J. D'AMBROSIO
JONES, TULLAR & COOPER, P.C.
P. O. BOX 2266 EADS STATION
ARLINGTON, VA 22202

In re Application of
Dieter H. Schmidt, et al.
Application No. 10/156,131
Filed: May 29, 2002
Attorney Docket No. N/A

ON PETITION

This is a decision on the petition under 37 CFR 1.137(b), filed July 31, 2003, to revive the above-identified application.

The petition is **GRANTED.**

The above-identified application became abandoned for failure to reply in a timely manner to the Notice to File Missing Parts of Nonprovisional Application mailed June 27, 2002. The Notice set a period for reply of two (2) months from the mail date of the Notice. No extensions of time under the provisions of 37 CFR 1.136(a) were obtained. Accordingly, the above-identified application became abandoned on August 28, 2002.

37 CFR 1.137(b)(3) requires a statement that the entire delay in filing the required reply from the due date for the reply until the filing of a grantable petition pursuant to 37 CFR 1.137(b) was unintentional. If the statement contained in the instant petition varies from the language required by 37 CFR 1.137(b)(3), it will be interpreted as the required statement. Petitioner must notify the Office if this is **not** a correct interpretation of the statement contained in the instant petition.

Telephone inquiries concerning this decision should be directed to the undersigned at (703) 306-5594.

The application file is being forwarded to the Office of Initial Patent Examination for further processing.

Retta Williams

Retta Williams
Petitions Examiner
Office of Petitions
Office of the Deputy Commissioner
for Patent Examination Policy

UNITED STATES PATENT AND TRADEMARK OFFICE

Commissioner for Patents
United States Patent and Trademark Office
P.O. Box 1450
Alexandria, VA 22313-1450
www.uspto.gov

December 06, 2004

Platon N. Mandros
BURNS, DOANE, SWECKER & MATHIS, L.L.P.
P.O. Box 1404
Alexandria,VA 22313-1404

DEC 8 2004

In re Application of:	:	
HIGUCHI, KOUSEI	:	DECISION ON PETITION
Application No. 10/156,134	:	TO WITHDRAW HOLDING
Filed: May 29, 2002	:	OF ABANDONMENT
Attorney Docket No.: 026905-014	:	

This is a decision on the petition filed December 17, 2003, to withdraw the holding of abandonment of the above-identified application for which no fee is required.

The petition is **granted.**

The application was held abandoned for the apparent failure of applicant to timely file a response to the Office action mailed on July 18, 2003.

Petitioner asserts that the Office action of July 18, 2003, was not received. The petition included a statement from the practitioner that the undersigned made a search of the file jacket and docketing records to establish non-receipt of the Office action. In addition, the petition included a copy of the docket records of the practitioner where the non-received Office action would have been entered had it been received by the practitioner.

A review of the written record indicates no irregularity in the mailing of the Office action, and in the absence of any irregularity there is a strong presumption that the Office action was properly mailed to practitioner at the address of record. This presumption may be overcome by a showing that the Office action was not in fact received. The showing required to establish the failure to receive an Office action must include a statement from the practitioner stating that the Office action was not received by the practitioner and attesting to the fact that a search of the file jacket and docket records indicates that the Office action was not received. A copy of the docket record where the non-received Office action would have been entered had it been received and docketed must be attached to and referenced in practitioner's statement. See "Withdrawing the Holding of Abandonment When Office Actions Are Not Received" 1156 Official Gazette 53 (November 16, 1993) and M.P.E.P. § 711.03(c).

For the above stated reason, the petition is granted. The holding of abandonment is withdrawn and the application is restored to pending status.

The application file is being forwarded to the Technology Center 2800 support staff for re-mailing of the July 18, 2003, Office action.

Inquiries regarding this decision should be directed to Lissi Mojica Marquis at (571) 272-1596.

Sharon A. Gibson, Special Programs Examiner
Technology Center 2800
Semiconductors, Electrical and Optical
Systems and Components

16 46

UNITED STATES PATENT AND TRADEMARK OFFICE

COMMISSIONER FOR PATENTS
UNITED STATES PATENT AND TRADEMARK OFFICE
P.O. BOX 1450
ALEXANDRIA, VA 22313-1450
www.uspto.gov

HUMAN GENOME SCIENCES INC
14200 SHADY GROVE ROAD
ROCKVILLE MD 20850

COPY MAILED

FEB 06 2004

OFFICE OF PETITIONS

Applicant: Ni et al.
Appl. No.: 10/156,136
Filing Date: October 3, 2002
Title: POLYNUCLEOTIDES AND POLYPEPTIDES ENCODING RECEPTORS
Attorney Docket No.: PF354C2
Pub. No.: US 2003/0129696 A1
Pub. Date: July 10, 2003

This is a decision on the request for corrected patent application publication under 37 CFR 1.221(b), filed on July 15, 2003 for the above-identified application.

The request is dismissed due to applicants request (phone call by Lin Hymel on February 4, 2004) to withdraw the Request for Corrected Publication.

Inquires concerning this communication should be directed to Mark Polutta at (703) 308-8122 (voice) or (703) 746-3465 (facsimile).

Mark O. Polutta
Office of Patent Legal Administration
Office of the Deputy Commissioner
for Patent Examination Policy

UNITED STATES PATENT AND TRADEMARK OFFICE

Commissioner for Patents
United States Patent and Trademark Office
P.O. Box 1450
Alexandria, VA 22313-1450
www.uspto.gov

RABIN & BERDO, PC
1101 14TH STREET, NW
SUITE 500
WASHINGTON, DC 20005

COPY MAILED

APR 15 2005

OFFICE OF PETITIONS

In re Application of :
Tetsuya Murakami et al :
Application No. 10/156,138 : ON PETITION
Filed: May 29, 2002 :
Attorney Docket No. AI 227

This is a decision on the petition, filed April 14, 2005, under 37 CFR 1.313(c)(2) to withdraw the above-identified application from issue after payment of the issue fee.

The petition is **GRANTED**.

The above-identified application is withdrawn from issue for consideration of a submission under 37 CFR 1.114 (request for continued examination). See 37 CFR 1.313(c)(2).

Petitioner is advised that the issue fee paid on January 19, 2005 in the above-identified application cannot be refunded. If, however, the above-identified application is again allowed, petitioner may request that it be applied towards the issue fee required by the new Notice of Allowance.[1]

Telephone inquiries should be directed to Irvin Dingle at (571) 272-3210.

This matter will be forwarded to Technology Center AU 3682 for processing of the request for continued examination under 37 CFR 1.114 and for consideration of the concurrently filed Information Disclosure Statement.

Irvin Dingle
Petitions Examiner
Office of Petitions
Office of the Deputy Commissioner
for Patent Examination Policy

---

[1] The request to apply the issue fee to the new Notice may be satisfied by completing and returning the new Issue Fee Transmittal Form PTOL-85(b), which includes the following language thereon: Commissioner for Patents is requested to apply the Issue Fee and Publication Fee (if any) or re-apply any previously paid issue fee to the application identified above. Petitioner is advised that, whether a fee is indicated as being due or not, the Issue Fee Transmittal Form **must** be completed and timely submitted to avoid abandonment. Note the language in bold text on the first page of the Notice of Allowance and Fee(s) Due (PTOL-85).

UNITED STATES PATENT AND TRADEMARK OFFICE

Commissioner for Patents
United States Patent and Trademark Office
P.O. Box 1450
Alexandria, VA 22313-1450
www.uspto.gov

COPY MAILED

DEC 0 9 2009

OFFICE OF PETITIONS

Pearl Cohen Zedek Latzer, LLP
1500 Broadway
12th Floor
New York NY 10036

In re Patent No. 6,735,005	:	
Issue Date: May 11, 2004	:	
Application No. 10/156,143	:	ON PETITION
Filed: May 29, 2002	:	
Attorney Docket No. P-72473-US (3017/66)	:	

This is a decision on the petition under 37 CFR 1.378(c), filed October 13, 2009, to accept the delayed payment of a maintenance fee for the above-identified patent.

The petition is **DISMISSED**.

If reconsideration of this decision is desired, a petition for reconsideration under 37 CFR 1.378(e) must be filed within TWO (2) MONTHS from the mail date of this decision. No extension of this two-month time limit can be granted under 37 CFR 1.136(a) or (b). This is **not** a final agency action within the meaning of 5 U.S.C. § 704.

Any petition for reconsideration of this decision must be accompanied by the petition fee of $400 as set forth in 37 CFR 1.17(f). The petition for reconsideration must include the lacking item(s) noted below, since, after a decision on the petition for reconsideration, no further reconsideration or review of the matter will be undertaken by the Director.

A petition to accept the unintentionally delayed payment of a maintenance fee under 35 U.S.C. 41(c) and 37 CFR 1.378(c) must be accompanied by: (1) a statement that the delay was unintentional; (2) payment of the appropriate maintenance fee, unless previously submitted; (3) payment of the surcharge set forth in 37 CFR 1.20(i)(2). This petition lacks items (2) & (3) above.

Further correspondence with respect to this matter should be addressed as follows:

By Mail: Mail Stop PETITION
Commissioner for Patents
Post Office Box 1450
Alexandria, VA 22313-1450

By hand: U. S. Patent and Trademark Office
Customer Service Window, Mail Stop Petitions
Randolph Building
401 Dulany Street
Alexandria, VA 22314

The centralized facsimile number is (571) 273-8300.

Telephone inquiries should be directed to Terri Johnson at (571) 272-2991.

Terri Johnson

Terri Johnson
Petitions Examiner
Office of Petitions

UNITED STATES PATENT AND TRADEMARK OFFICE

Commissioner for Patents
United States Patent and Trademark Office
P.O. Box 1450
Alexandria, VA 22313-1450
www.uspto.gov

Pearl Cohen Zedek Latzer, LLP
1500 Broadway
12th Floor
New York NY 10036

MAILED

MAR 03 2010

OFFICE OF PETITIONS

In re Patent No. 6,735,005	:	
Issue Date: May 11, 2004	:	
Application No. 10/156,143	:	ON PETITION
Filed: May 29, 2002	:	
Attorney Docket No. **P-72473-US (3017/66)**	:	

This is a decision on the renewed petition under 37 CFR 1.378(c), filed January 26, 2010, to accept the unintentionally delayed payment of a maintenance fee for the above-identified patent.

The petition is **GRANTED**.

This patent expired on May 12, 2008 for failure to pay the three and one-half year maintenance fee. Since this petition was submitted within twenty-four months after the six-month grace period provided in 37 CFR 1.362(e), the petition was timely filed under the provisions of 37 CFR 1.378(c).

The maintenance fee is hereby accepted and the above-identified patent is reinstated as of the mail date of this decision.

It is not apparent whether the person signing the statement of unintentional delay was in a position to have firsthand or direct knowledge of the facts and circumstances of the delay at issue. Nevertheless, such statement is being treated as having been made as the result of a reasonable inquiry into the facts and circumstances of such delay. In the event that such an inquiry has not been made, petitioner must make such an inquiry. If such inquiry results in the discovery that the delay in paying the maintenance fee under 37 CFR 1.378(c) was intentional, petitioner must notify the Office.

Telephone inquiries concerning this decision should be directed to Terri Johnson at (571) 272-2991.

The patent file is being forwarded to Files Repository.

Terri Johnson

Terri Johnson
Petitions Examiner
Office of Petitions

OIPE
OCT 0 8 2002
PATENT & TRADEMARK OFFICE

UNITED STATES PATENT AND TRADEMARK OFFICE

COMMISSIONER FOR PATENTS
UNITED STATES PATENT AND TRADEMARK OFFICE
WASHINGTON, D.C. 20231
www.uspto.gov

APPLICATION NUMBER	FILING/RECEIPT DATE	FIRST NAMED APPLICANT	ATTORNEY DOCKET NUMBER
10/156,144	05/29/2002	James Anthony Saba	

CONFIRMATION NO. 3422

FORMALITIES LETTER

OC000000008798242

JAMES SABA
2442 SECOR Rd.
TOLEDO, OH 43606

Date Mailed: 09/17/2002

NOTICE TO COMPLY WITH REQUIREMENTS FOR PATENT APPLICATIONS CONTAINING NUCLEOTIDE SEQUENCE AND/OR AMINO ACID SEQUENCE DISCLOSURES

Applicant is given **TWO MONTHS FROM THE DATE OF THIS NOTICE** within which to file the items indicated below to avoid abandonment. Extensions of time may be obtained under the provisions of 37 CFR 1.136(a).

- A copy of the "Sequence Listing" in computer readable form has been submitted. However, the content of the computer readable form does not comply with the requirements of 37 C.F.R. 1.822 and/or 1.823, as indicated on the attached copy of the marked -up "Raw Sequence Listing." Applicant must provide a substitute computer readable form (CRF) copy of the "Sequence Listing" and a statement that the content of the sequence listing information recorded in computer readable form is identical to the written (on paper or compact disc) sequence listing and, where applicable, includes no new matter, as required by 37 CFR 1.821(e), 1.821(f), 1.821(g), 1.825(b), or 1.825(d).

For questions regarding compliance to these requirements, please contact:

- **For Rules Interpretation, call (703) 308-4216**
- **To Purchase PatentIn Software, call (703) 306-2600**
- **For PatentIn Software Program Help, call (703) 306-4119 or e-mail at patin21help@uspto.gov or patin3help@uspto.gov**

A copy of this notice MUST be returned with the reply.

Customer Service Center
Initial Patent Examination Division (703) 308-1202

PART 2 - COPY TO BE RETURNED WITH RESPONSE

UNITED STATES PATENT AND TRADEMARK OFFICE

COMMISSIONER FOR PATENTS
UNITED STATES PATENT AND TRADEMARK OFFICE
P.O. BOX 1450
ALEXANDRIA, VA 22313-1450
www.uspto.gov

COPY

ROSS D. SNYDER
REC APR 13 2004
ASSOCIATES, INC.

Paper No. ____

ROSS D. SNYDER & ASSOCIATES, INC.
115 WILD BASIN ROAD, SUITE 107
AUSTIN, TX 78746

OIPE JC42
JUL 26 2004
PATENT & TRADEMARK OFFICE

COPY MAILED

MAR 24 2004

OFFICE OF PETITIONS

In re Application of
Jason Chung-Shih Chen et al
Application No. 10/156,152
Filed: May 28, 2002
Attorney Docket No. 1400.41002061

: DECISION GRANTING PETITION
: UNDER 37 CFR 313(c)(2)

This is a decision on the petition, filed March 24, 2004, under 37 CFR 1.313(c)(2) to withdraw the above-identified application from issue after payment of the issue fee.

The petition is **GRANTED**.

The above-identified application is withdrawn from issue for consideration of a submission under 37 CFR 1.114 (request for continued examination). See 37 CFR 1.313(c)(2).

Petitioner is advised that the issue fee paid on January 21, 2004 in the above-identified application cannot be refunded. If, however, the above-identified application is again allowed, petitioner may request that it be applied towards the issue fee required by the new Notice of Allowance.[1]

Telephone inquiries should be directed to the undersigned at (703) 305-8680.

Upon receipt of the file in the Office of Petitions, the file will be forwarded to Technology Center AU 2186 for processing of the request for continued examination under 37 CFR 1.114 and for consideration of the concurrently filed "Supplemental Amendment."

Frances Hicks
Frances Hicks
Petitions Examiner
Office of Petitions
Office of the Deputy Commissioner
for Patent Examination Policy

DOCKETED
Date: _____
By: _____

[1] The request to apply the issue fee to the new Notice may be satisfied by completing and returning the new Issue Fee Transmittal Form PTOL-85(b), which includes the following language thereon: "Commissioner for Patents is requested to apply the Issue Fee and Publication Fee (if any) or re-apply any previously paid issue fee to the application identified above." Petitioner is advised that, whether a fee is indicated as being due or not, the Issue Fee Transmittal Form **must** be completed and timely submitted to avoid abandonment. Note the language in bold text on the first page of the Notice of Allowance and Fee(s) Due (PTOL-85).

UNITED STATES PATENT AND TRADEMARK OFFICE

Commissioner for Patents
United States Patent and Trademark Office
P.O. Box 1450
Alexandria, VA 22313-1450
www.uspto.gov

Myers, Andras, Sherman, LLP
19900 MacArthur Blvd.
Suite 1150
Irvine, CA 92612

MAILED

DEC 07 2009

OFFICE OF PETITIONS

In re Application of :
Amar Gogoi et al. :
Application No. 10/156,153 : NOTICE
Filed: May 28, 2002 :
Attorney Docket No. MET2.PAU.31 :

This is a notice regarding your request for acceptance of a fee deficiency submission under 37 CFR 1.28 filed August 31, 2009. On September 1, 1998, the Court of Appeals for the Federal Circuit held that 37 CFR 1.28(c) is the sole provision governing the time for correction of the erroneous payment of the issue fee as a small entity. **See DH Technology v. Synergystex International, Inc. 154 F.3d 1333, 47 USPQ2d 1865 (Fed. Cir. Sept. 1, 1998).**

The Office no longer investigates or rejects original or reissue applications under 37 CFR 1.56. **1098 Off. Gaz. Pat. Office 502 (January 3, 1989)**. Therefore, nothing in this Notice is intended to imply that an investigation was done.

Your fee deficiency submission under 37 CFR 1.28 is hereby accepted. The petition is **GRANTED**.

This application is no longer entitled to small entity status. Accordingly, all future fees paid in this application must be paid at the large entity rate.

This file is being forwarded to Files Repository.

Telephone inquiries related to this decision should be directed to the Kimberly Inabinet at (571) 272-4618.

Carl Friedman
Petitions Examiner
Office of Petitions

UNITED STATES PATENT AND TRADEMARK OFFICE

Commissioner for Patents
United States Patent and Trademark Office
P.O. Box 1450
Alexandria, VA 22313-1450
www.uspto.gov

NORMAN P. SOLOWAY
HAYES SOLOWAY PC
130 W. CUSHING STREET
TUCSON, AZ 85701

COPY MAILED

DEC 29 2005

OFFICE OF PETITIONS

In re Application of	:	
Ryuichi Katayama	:	
Application No. 10/156,163	:	DECISION GRANTING PETITION
Filed: May 28, 2002	:	UNDER 37 CFR 1.313(c)(3)
Attorney Docket No. NEC DP-872	:	

This is a decision on the petition, filed , under 37 CFR 1.313(c)(3) to withdraw the above-identified application from issue after payment of the issue fee.

The petition is **GRANTED**.

Petitioner requests that the above-identified application be withdrawn from issue for express abandonment in favor in a continuing application stated to have been filed of even date. See 37 CFR 1.313(c)(3).

The application is hereby withdrawn from issue, and the express abandonment is acknowledged.

Telephone inquiries should be directed to the undersigned at (571) 272-3218.

Frances Hicks
Petitions Examiner
Office of Petitions

cc:

Norman P. Soloway
Hayes Soloway PC
3450 E. Sunrise Drive, Suite 140
Tucson, AZ 85718

Pet Dec.

PTO/SB/83 (08-03)
Approved for use through 11/30/2005. OMB 0651-0035
U.S. Patent and Trademark Office, U.S. DEPARTMENT OF COMMERCE
Under the Paperwork Reduction Act of 1995, no persons are required to respond to a collection of information unless it displays a valid OMB control number.

REQUEST FOR WITHDRAWAL AS ATTORNEY OR AGENT

Application Number	10/156,166
Filing Date	MAY 28, 2002
First Named Inventor	LOPEZ, RICHARD A.
Art Unit	1734
Examiner Name	LAZOR, MICHELLE A.
Attorney Docket Number	933-03031803

To: Commissioner for Patents
P.O. Box 1450
Alexandria, VA 22313-1450

Approved
JMStone
Jacqueline M. Stone, Director
Technology Center 1700
JUN 21 2004

I hereby apply to withdraw as attorney or agent for the above identified patent application.

The reasons for this request are: Client's inability to pay legal fees.

CORRESPONDENCE ADDRESS

1. ☐ The correspondence address is NOT affected by this withdrawal.
2. ☒ Change the correspondence address and direct all future correspondence to: Richard Lopez, 3431 W. Carriage Dr., Santa Ana, CA 92704, TEL: (714) 434-9585, FAX: (714) 434-9686

☐ Customer Number:

OR

☒ Firm or Individual Name	Richard A. Lopez				
Address	3431 W. Carriage Dr.				
Address					
City	Santa Ana	State	California	Zip	92704
Country	United States of America				
Telephone	(714) 434-9585			Fax	(714) 434-9686

☒ This request is made on behalf of myself and
- ☐ all the attorneys/agents of record.
- ☐ the attorneys/agents (with registration numbers) listed on the attached paper(s), or
- ☐ the attorneys/agents associated with Customer Number

This request is enclosed in **triplicate** (including any attachments).

Name	Charles C.H. Wu		
Signature	CHWu	Registration No.	39,081
Date	March 1, 2004		

NOTE: Withdrawal is effective when approved rather than when received. Unless there are at least 30 days between approval of withdrawal and the expiration date of a time period for response or possible extension period, the request to withdraw is normally disapproved.

This collection of information is required by 37 CFR 1.36. The information is required to obtain or retain a benefit by the public which is to file (and by the USPTO to process) an application. Confidentiality is governed by 35 U.S.C. 122 and 37 CFR 1.14. This collection is estimated to take 12 minutes to complete, including gathering, preparing, and submitting the completed application form to the USPTO. Time will vary depending upon the individual case. Any comments on the amount of time you require to complete this form and/or suggestions for reducing this burden, should be sent to the Chief Information Officer, U.S. Patent and Trademark Office, U.S. Department of Commerce, P.O. Box 1450, Alexandria, VA 22313-1450. DO NOT SEND FEES OR COMPLETED FORMS TO THIS ADDRESS. SEND TO: **Commissioner for Patents, P.O. Box 1450, Alexandria, VA 22313-1450.**

If you need assistance in completing the form, call 1-800-PTO-9199 and select option 2.

Pet Dec

LAW OFFICES OF
WU & CHEUNG, L.L.P.
7700 IRVINE CENTER DRIVE, SUITE 710
IRVINE, CALIFORNIA 92618 - 3043 U.S.A.
TELEPHONE: (949) 251 - 0111
FACSIMILE: (949) 251 - 1588
E-MAIL: INFO@ WCLAWYERS.COM
WWW.WCLAWYERS.COM

RECEIVED
CENTRAL FAX CENTER
MAR 0 1 2004

OFFICIAL

FACSIMILE COVER PAGE

DATE: MARCH 1, 2004			
TO:	COMMISSIONER FOR PATENTS		
FAX NO.:	(703) 872 - 9306		
COMPANY:	UNITED STATES PATENT AND TRADEMARK OFFICE		
OUR FILE NO.:	933-04030103		
CLIENT NAME:	RICHARD A. LOPEZ SOUTHERN CALIFORNIA WOOD TREATING, INC.		
TOT. PAGES:	3	SENT BY:	SOPHIA CHANG
ORIGINAL WILL FOLLOW VIA U.S. MAIL: [ ] YES [X] NO			

The information contained in this transmission is privileged and confidential. It is intended only for the use of the individual or entity named above. If the reader of this message is not the intended recipient, you are hereby notified that any dissemination, distribution or copying of this communication is strictly prohibited. If you have received this communication in error, please notify us immediately by telephone collect and return the original message to us at the address above via the U.S. Postal Service. We will reimburse you for your postage.

SUBJECT: **In re Application of Richard A. Lopez**
Serial No.: 10/156,166
Filed: MAY 28, 2002
For: METHOD OF USING A ROLL COATER AND METHOD OF MODIFYING THE SAME
Group Art Unit: 1734
Examiner: LAZOR, MICHELLE A.

MESSAGE:

ENCLOSED PLEASE FIND THE REQUEST FOR WITHDRAWAL AS ATTORNEY OR AGENT.

J:\SC Wood 933\166 Patent\Crs\USPTO 1 Fax Cvr

 Pet. Dec.

CERTIFICATE UNDER C.F.R. §§§ 1.8(a), 1.10*, and 1.6

I hereby certify that on the date shown below, this correspondence is being:

MAILING

[ ] deposited with the United States Postal Service in an envelope addressed to: Commissioner for Patents, P.O. Box 1450, Alexandria, VA 22313-1450

[ ] 37 CFR 1.8(a)
with sufficient postage as first class mail.
[ ] 37 CFR 1.10
as "Express Mail Post Office to Addressee"
Mailing label no.:

TRANSMISSION

[X] 37 CFR 1.6
transmitted by facsimile to: (703) 872-9306

Date: March 1, 2004

Sophia Chang

UNITED STATES PATENT AND TRADEMARK OFFICE

Commissioner for Patents
United States Patent and Trademark Office
P.O. Box 1450
Alexandria, VA 22313-1450
www.uspto.gov

MAILED

NOV 09 2009

OFFICE OF PETITIONS

Myers, Dawes, Andras & Sherman
19900 MacArthur Boulevard
Suite 1150
Irvine, CA 92612

In re Application:
Amar Gogoi et al.
Application No. 10/156,173
Filed: May 28, 2002
Attorney Docket No. MET2.PAU.30

NOTICE

This is a notice regarding your request for acceptance of a fee deficiency submission under 37 CFR 1.28 filed August 31, 2009. On September 1, 1998, the Court of Appeals for the Federal Circuit held that 37 CFR 1.28(c) is the sole provision governing the time for correction of the erroneous payment of the issue fee as a small entity. **See DH Technology v. Synergystex International, Inc. 154 F.3d 1333, 47 USPQ2d 1865 (Fed. Cir. Sept. 1, 1998).**

The Office no longer investigates or rejects original or reissue applications under 37 CFR 1.56. **1098 Off. Gaz. Pat. Office 502 (January 3, 1989)**. Therefore, nothing in this Notice is intended to imply that an investigation was done.

Your fee deficiency submission under 37 CFR 1.28 is hereby accepted. The petition is **GRANTED**.

This application is no longer entitled to small entity status. Accordingly, all future fees paid in this application must be paid at the large entity rate.

This file is being forwarded to Files Repository.

Telephone inquiries related to this decision should be directed to the Kimberly Inabinet at (571) 272-4618.

Carl Friedman
Petitions Examiner
Office of Petitions

UNITED STATES PATENT AND TRADEMARK OFFICE

Commissioner for Patents
United States Patent and Trademark Office
P.O. Box 1450
Alexandria, VA 22313-1450
www.uspto.gov

HELLER EHRMAN WHITE & McAULIFFE LLP
1717 RHODE ISLAND AVENUE NW
WASHINGTON, DC 20036-3001

FAX RECEIVED

MAY 26 2005

OFFICE OF PETITIONS

In re Application of
Jong Woo Kim et al
Application No. 10/156,191
Filed: May 29, 2002
Attorney Docket No. 042133-0001

DECISION GRANTING PETITION
UNDER 37 CFR 1.313(c)(2)

This is a decision on the petition, filed May 20, 2005, under 37 CFR 1.313(c)(2) to withdraw the above-identified application from issue after payment of the issue fee.

The petition is **GRANTED**.

The above-identified application is withdrawn from issue for consideration of a submission under 37 CFR 1.114 (request for continued examination). See 37 CFR 1.313(c)(2).

Petitioner is advised that the issue fee paid on May 3, 2005 in the above-identified application cannot be refunded. If, however, the above-identified application is again allowed, petitioner may request that it be applied towards the issue fee required by the new Notice of Allowance.[1]

Telephone inquiries should be directed to the undersigned at (571) 272-3218.

This matter is being referred to Technology Center AU 2871 for processing of the request for continued examination under 37 CFR 1.114 and for consideration of the Information Disclosure Statement.

Frances Hicks
Petitions Examiner
Office of Petitions
Office of the Deputy Commissioner
for Patent Examination Policy

---

[1] *The request to apply the issue fee to the new Notice may be satisfied by completing and returning the new Issue Fee Transmittal Form PTOL-85(b), which includes the following language thereon: "Commissioner for Patents is requested to apply the Issue Fee and Publication Fee (if any) or re-apply any previously paid issue fee to the application identified above." Petitioner is advised that, whether a fee is indicated as being due or not, the Issue Fee Transmittal Form* ***must*** *be completed and timely submitted to avoid abandonment. Note the language in bold text on the first page of the Notice of Allowance and Fee(s) Due (PTOL-85).*

UNITED STATES PATENT AND TRADEMARK OFFICE

Commissioner for Patents
United States Patent and Trademark Office
P.O. Box 1450
Alexandria, VA 22313-1450
www.uspto.gov

McKENNA LONG & ALDRIDGE LLP
1900 K STREET NW
WASHINGTON, DC 20006

COPY MAILED

JUL 18 2006

OFFICE OF PETITIONS

In re Application of	:
Jong Woo Kim et al	:
Application No. 10/156,191	: DECISION GRANTING PETITION
Filed: May 29, 2002	: UNDER 37 CFR 1.313(c)(2)
Attorney Docket No. 8734.074.00-US	:

This is a decision on the petition, filed July 10, 2006, under 37 CFR 1.313(c)(2) to withdraw the above-identified application from issue after payment of the issue fee.

The petition is **GRANTED**.

The above-identified application is withdrawn from issue for consideration of a submission under 37 CFR 1.114 (request for continued examination). See 37 CFR 1.313(c)(2).

Petitioner is advised that the issue fee paid on May 24, 2006 in the above-identified application cannot be refunded. If, however, the above-identified application is again allowed, petitioner may request that it be applied towards the issue fee required by the new Notice of Allowance.[1]

Telephone inquiries should be directed to the undersigned at (571) 272-3218.

This matter is being referred to Technology Center AU 2871 for processing of the request for continued examination under 37 CFR 1.114 and for consideration of the Information Disclosure Statement.

Frances Hicks
Petitions Examiner
Office of Petitions

C:\Documents and Settings\FHicks\My Documents\470\july9\156191.wpd

---

[1] *The request to apply the issue fee to the new Notice may be satisfied by completing and returning the new Part B – Fee(s) Transmittal Form (along with any balance due at the time of submission), which includes the following language thereon: "The Director of the USPTO is requested to apply the Issue Fee and Publication Fee (if any) or to re-apply any previously paid issue fee in the application identified above. Petitioner is advised that, whether a fee is indicated as being due or not, the Issue Fee Transmittal Form* ***must*** *be completed and timely submitted to avoid abandonment. Note the language in bold text on the first page of the Notice of Allowance and Fee(s) Due (PTOL-85).*

UNITED STATES PATENT AND TRADEMARK OFFICE

Commissioner for Patents
United States Patent and Trademark Office
P.O. Box 1450
Alexandria, VA 22313-1450
www.uspto.gov

November 13, 2009

Patent No. : 7,548,520 B2
Appl. No. : 10/156,194
Inventor(s) : Jan P. Kurys
Issued : June 16, 2009
Title : **SELF-ORGANIZING SYSTEM FOR WIRELESS ACCESS**
Docket No. : **KRUYS 4**

Re: Request for Certificate of Correction

Consideration has been given your request for the issuance of a certificate of correction for the above-identified patent under the provisions of Rule 1.323.

Assignees' names and addresses (assignment data) printed in a patent, are based *solely* on information supplied in the appropriate space for identifying the assignment data, i.e., item 3 of the Issue Fee Transmittal Form PTOL-85B. Granting of a request under 37 CFR 3.81(b) is required to correct applicant's error providing ***incorrect or erroneous*** assignment data, *before* issuance of a Certificate of Correction, under 37 CFR 1.323 *(see Manual of Patent Examining Procedures (M.P.E.P) Chp.1400, sect. 1481).* This procedure is required *at any time after the issue fee is paid*, including after issuance of the patent.

In view of the foregoing, your request, in this mater, is hereby denied.

A request to correct the Assignee under 37 CFR 3.81(b) should include:

A. **the processing fee set forth in 37 CFR 1.117(h) (currently $130);**
B. a statement that the failure to include the correct assignee name on the PTOL-85B was inadvertent; and
C. a copy of the Notice of Recordation of Assignment Document, reflecting the reel and frame number where the assignment(s) is recorded and/or reflecting proof of *the date* the assignment was submitted for recordation.

In the Request, Applicant(s) may request that the file be forwarded to Certificates of Correction Branch, for issuance of a Certificate of Correction, if the Request is granted.

Any request under 37 CFR 3.81(b) should be directed to the following address or facsimile number:

By mail: Mail Stop PETITIONS
Commissioner for Patents
Post Office Box 1450
Alexandria, VA 22313-1450

By hand: Customer Service Window
Mail Stop Petitions
Randolph Building
40l Dulany Street
Alexandria, VA 22314

By fax: (571) 273-0025
ATTN: Office of Petitions

If a fee (currently $100) was previously submitted for consideration of a Request for Certificate of Correction, under CFR 1.323, to correct assignment data, , no additional fee is required.

Antonio Johnson
For Mary F. Diggs
Decisions & Certificates
of Correction Branch
(571)272-0483

HITT GAINES, PC
LSI Corporation
PO BOX 832570
RICHARDSON TX 75083

UNITED STATES PATENT AND TRADEMARK OFFICE

Commissioner for Patents
United States Patent and Trademark Office
P.O. Box 1450
Alexandria, VA 22313-1450
www.uspto.gov

HITT GAINES, PC
LSI Corporation
PO BOX 832570
RICHARDSON TX 75083

COPY MAILED
MAR 15 2010

In re Patent No. 7,548,520	:	
Issue Date: June 16, 2009	:	
Application No. 10/156,194	:	ON PETITION
Filed: May 29, 2002	:	
Attorney Docket No. KRUYS 4	:	

This is a decision on the petition filed December 2, 2009, under 37 CFR 3.81(b) to correct the name of the assignee on the front page of the above-identified patent by way of a Certificate of Correction.

The petition is **GRANTED**.

The patent file is being forwarded to the Certificates of Correction Branch for issuance of the requested Certificate of Correction.

Telephone inquiries concerning this decision may be directed to the Kimberly Inabinet at (571) 272-4618. Inquiries regarding the issuance of a certificate of correction should be directed to the Certificate of Correction Branch at (703) 305-8309.

Carl Friedman
Petitions Examiner
Office of Petitions

UNITED STATES PATENT AND TRADEMARK OFFICE

COMMISSIONER FOR PATENTS
UNITED STATES PATENT AND TRADEMARK OFFICE
P.O. BOX 1450
ALEXANDRIA, VA 22313-1450
www.uspto.gov

Paper No. 13

Albert C. Metrailer
Conley, Rose & Tayon, P.C.
5700 Granite Parkway, Suite 330
Plano, TX 75024

COPY MAILED
OCT 2 2 2003
OFFICE OF PETITIONS

In re Application of
Tony F. Grattan
Application No. 10/156,220
Filed: May 28, 2002
Attorney Docket No. 2002-IP-007138 U1 USA

ON PETITION

This is a decision on the petition under 37 CFR 1.313(c)(2), filed by facsimile transmission on October 22, 2003, to withdraw the above-identified application from issue after payment of the issue fee.

The petition is **GRANTED**.

The above-identified application is withdrawn from issue for consideration of a submission under 37 CFR 1.114 (request for continued examination). See 37 CFR 1.313(c)(2).

Petitioner is advised that the issue fee paid on September 30, 2003, in the above-identified application cannot be refunded. If, however, the above-identified application is again allowed, petitioner may request that it be applied towards the issue fee required by the new Notice of Allowance. [1]

Telephone inquiries relating to this decision should be directed to the undersigned at (703) 305-9220.

After receipt in the Office of Petitions, the application will be forwarded to Technology Center AU 3641 for further processing of the request for continued examination under 37 CFR 1.114.

Sherry D. Brinkley
Petitions Examiner
Office of Petitions
Office of the Deputy Commissioner
for Patent Examination Policy

[1] The request to apply the issue fee to the new Notice may be satisfied by completing and returning the new Issue Fee Transmittal Form PTOL-85(b), which includes the following language thereon: "Commissioner for Patents is requested to apply the Issue Fee and Publication Fee (if any) or re-apply any previously paid issue fee to the application identified above." Petitioner is advised that, whether a fee is indicated as being due or not, the Issue Fee Transmittal Form **must** be completed and timely submitted to avoid abandonment. Note the language in bold text on the first page of the Notice of Allowance and Fee(s) Due (PTOL-85).

UNITED STATES PATENT AND TRADEMARK OFFICE

UNITED STATES DEPARTMENT OF COMMERCE
United States Patent and Trademark Office
Address: COMMISSIONER FOR PATENTS
P.O. Box 1450
Alexandria, Virginia 22313-1450
www.uspto.gov

MARKS & CLERK
P.O. BOX 957
STATION B
OTTAWA, ON K1P 5S7
CANADA

Mail Date: 08/02/2010

Applicant	: Satvinder Singh Bawa	: DECISION ON REQUEST FOR
Patent Number	: 7650398	: RECALCULATION of PATENT
Issue Date	: 01/19/2010	: TERM ADJUSTMENT IN VIEW
Application No	: 10/156,228	: OF WYETH AND NOTICE OF INTENT TO
Filed	: 05/29/2002	: ISSUE CERTIFICATE OF CORRECTION
		:

The Request for Recalculation is **GRANTED** to the extent indicated.

The patent term adjustment has been determined to be **1993** days. The USPTO will *sua sponte* issue a certificate of correction reflecting the amount of PTA days determined by the recalculation.

Prior to the issuance of the certificate of correction, the USPTO will afford patentee an opportunity to be heard and request reconsideration. Accordingly, patentee has **one month or thirty (30) days**, whichever is longer, to file a request for reconsideration of this patent term adjustment calculation. See 35 U.S.C. 154(b)(3)(B)(ii) and 37 CFR 1.322(a)(4). No extensions of time will be granted under 37 CFR 1.136.

Patentee should use document code PET.OP if electronically filing a request for reconsideration of this patent term adjustment calculation. The patentee must also include the information required by 37 CFR 1.705(b)(2) and the fee required by 37 CFR 1.18(e). If patentee does not file a timely request for reconsideration of this patent term adjustment calculation including the information required by 37 CFR 1.705(b)(2) and the fee required by 37 CFR 1.18(e), the USPTO will issue a certificate of correction reflecting the PTA determination noted above.

Patentee should be aware that in order to preserve the right to review in the United States District Court for the District of Columbia of the USPTO patent term adjustment determination, patentee must ensure that he or she also take the steps required under 35 U.S.C. 154(b)(4)(A) in a timely manner. Nothing in the request for recalculation should be construed as providing an alternative time frame for commencing a civil action under 35 U.S.C. 154(b)(4)(A).

Any questions concerning this decision should be directed to the Office of Patent Legal Administration at 571-272-7702.

UNITED STATES PATENT AND TRADEMARK OFFICE

Commissioner for Patents
United States Patent and Trademark Office
P.O. Box 1450
Alexandria, VA 22313-1450
www.uspto.gov

SYMYX TECHNOLOGIES INC
LEGAL DEPARTMENT
3100 CENTRAL EXPRESS
SANTA CLARA, CA 95051

COPY MAILED

MAY 2 4 2005

OFFICE OF PETITIONS

ON PETITION

In re Application of	:
Eric D. Carlson et al	:
Application No. 10/156,245	:
Filed: May 24, 2002	:
Attorney Docket No. 2001-013R2RCE	:

This is a decision on the petition, filed May 13, 2005, under 37 CFR 1.313(c)(2) to withdraw the above-identified application from issue after payment of the issue fee.

The petition is **GRANTED.**

The above-identified application is withdrawn from issue for consideration of a submission under 37 CFR 1.114 (request for continued examination). See 37 CFR 1.313(c)(2).

Petitioner is advised that the issue fee paid on December 23, 2004 in the above-identified application cannot be refunded. If, however, the above-identified application is again allowed, petitioner may request that it be applied towards the issue fee required by the new Notice of Allowance.[1]

Telephone inquiries should be directed to the undersigned at (571) 272-3208.

The examiner of Technology Center AU 1723 will consider the request for continued examination under 37 CFR 1.114.

Karen Creasy

Karen Creasy
Petitions Examiner
Office of Petitions
Office of the Deputy Commissioner
for Patent Examination Policy

---

[1] The request to apply the issue fee to the new Notice may be satisfied by completing and returning the new Issue Fee Transmittal Form PTOL-85(b), which includes the following language thereon: "Commissioner for Patents is requested to apply the Issue Fee and Publication Fee (if any) or re-apply any previously paid issue fee to the application identified above." Petitioner is advised that, whether a fee is indicated as being due or not, the Issue Fee Transmittal Form **must** be completed and timely submitted to avoid abandonment. Note the language in bold text on the first page of the Notice of Allowance and Fee(s) Due (PTOL-85).

10156245

SPE RESPONSE FOR CERTIFICATE OF CORRECTION

DATE : 101105 **Paper No.:** _____

TO SPE OF : ART UNIT 1723 - KRISHNAN

SUBJECT : Request for Certificate of Correction on Patent No.: 6939515 B2

A response is requested with respect to the accompanying request for a certificate of correction.

Please complete this form and return with file, within 7 days to:
Palm location **7580, Certificates of Correction Branch – South Tower – 9A22**
If response is for an IFW, **return to employee (named below) via PUBSCofC Team in MADRAS.**
With respect to the change(s) requested, correcting Office and/or Applicant's errors, should the patent read as shown in the certificate of correction (COCIN)? No new matter should be introduced, nor should the scope or meaning of the claims be changed.

Thank You For Your Assistance

ROCHAUN JOHNSON
Certificates of Correction Branch
Tel. No. 703-308-9390 EXT 119

The request for issuing the above-identified correction(s) is hereby:
Note your decision on the appropriate box.

- ☐ **Approved** — All changes apply.
- ☒ **Approved in Part** — Specify below which changes do not apply.
- ☐ **Denied** — State the reasons for denial below.

Comments:

The requested changes to col. 70, 71 & 72 are approved. The requested changes to Item [56] are not approved.

STEVEN P. GRIFFIN
SUPERVISORY PATENT EXAMINER
TECHNOLOGY CENTER 1700

Steven P. Griffin
SPE

1731/1723
Art Unit

UNITED STATES PATENT AND TRADEMARK OFFICE

COMMISSIONER FOR PATENTS
UNITED STATES PATENT AND TRADEMARK OFFICE
WASHINGTON, D.C. 20231
www.uspto.gov

Paper No. 5

AUDLEY A. CIAMPORCERO JR.
JOHNSON & JOHNSON
ONE JOHNSON & JOHNSON PLAZA
NEW BRUNSWICK, NJ 08933-7003

COPY MAILED
MAR 18 2003
OFFICE OF PETITIONS

In re Application of :
Jill M. Carton et al :
Application No. 10/156,255 : ON PETITION
Filed: May 28, 2002 :
Attorney Docket No. CEN0292 :

This is a decision on the petition under 37 CFR 1.137(b), filed February 19, 2003, to revive the above-identified application.

The petition is **GRANTED**.

The above-identified application became abandoned for failure to reply in a timely manner to the Notice to Comply with Requirements for Patent Applications Containing Nucleotide Sequence and/or Amino Acid Sequence Disclosures (Notice) mailed July 11, 2002. The Notice set a period for reply of two (2) months from the mail date of the Notice. No extensions of time under the provisions of 37 CFR 1.136(a) were obtained. Accordingly, the above-identified application became abandoned on September 12, 2002.

Telephone inquiries concerning this decision should be directed to Wan Laymon at (703) 305-9282.

The application file is being forwarded to the Office of Initial Patent Examination.

Wan Laymon

Wan Laymon
Petitions Examiner
Office of Petitions
Office of the Deputy Commissioner
for Patent Examination Policy

UNITED STATES PATENT AND TRADEMARK OFFICE

Commissioner for Patents
United States Patent and Trademark Office
P.O. Box 1450
Alexandria, VA 22313-1450
www.uspto.gov

SONNENSCHEIN NATH & ROSENTHAL LLP
P.O. BOX 061080
WACKER DRIVE STATION, SEARS TOWER
CHICAGO, IL 60606-1080

COPY MAILED

AUG 06 2007

OFFICE OF PETITIONS

In re Application of

Segawa, et al. :

Application No. 10/156,283

: DECISION ON PETITION

Filed: May 28, 2002

:

Attorney Docket No. 09792909-5431

This is a decision on the petition under 37 CFR 1.137(b), filed March 7, 2007, to revive the above-identified application.

The petition is **GRANTED**.

The above-cited application became abandoned for failure to file a proper reply in a timely manner to the final Office action mailed August 30, 2006, which set a shortened statutory period for reply of three (3) months from its mailing date. A response was filed on October 9, 2006. An Advisory Action mailed October 18, 2006, advised petitioner advised that the response of October 9, 2006, failed to place the application in condition for allowance. No further responses were filed in the allowable period. The application became abandoned on December 1, 2006.

The Request for Continued Examination filed March 7, 2007, is noted and made of record.

The application is being forwarded to Technology Center 1700, GAU 1745 for further processing.

Telephone inquiries concerning this decision should be directed to the undersigned at (571) 272-3222.

Kenya A. McLaughlin
Petitions Attorney
Office of Petitions

UNITED STATES PATENT AND TRADEMARK OFFICE

COMMISSIONER FOR PATENTS
UNITED STATES PATENT AND TRADEMARK OFFICE
P.O. BOX 1450
ALEXANDRIA, VA 22313-1450
www.uspto.gov

G. F. GALLINGER
7420 MILNER DR.
#1000
COLORADO SPRINGS, CO 80920

COPY MAILED

MAR 30 2005

OFFICE OF PETITIONS

In re Application of	:	
Brian F. McFee	:	
Application No. 10/156,287	:	DECISION
Filed: May 29, 2002	:	ON PETITION
Title of Invention:	:	
LINK SHOELACE REPLACEMENT	:	

This is a decision on the Petition to revive the application based upon unavoidable abandonment, filed March 3, 2005. The petition is properly treated under 37 CFR 1.181.

The petition is **granted.**

The above-identified application became abandoned for failure to reply in a timely manner to the Office communication, mailed September 17, 2003. The Office communication set a three (3) month period for reply, and provided for extensions of time under 37 CFR 1.136(a). No reply having been received, the application became abandoned on December 18, 2004. A Notice of Abandonment was mailed on April 16, 2004.

Applicant's Assertion

Applicant asserts that a timely reply to the non-final Office action was filed on October 17, 2003. In support of this assertion, Applicant provides, *inter alia*, copies of an Amendment which contains a Certificate of Mailing dated October 17, 2003.

A review of Application serial number 10/158,257, reveals that no Office communication was mailed on September 17, 2003; nor was there an amendment received in that application that was filed October 17, 2003. A search of the attorney's patent applications pending at this Office reveal that the application file for LINK SHOELACE REPLACEMENT, having as an inventor Brian F. McFee, has been assigned an application serial number of 10/156, 287, and not 10/158,287. A further review of application serial number 10/156,287 reveal that an Office

Communication was mailed to Applicant's attorney on September 17, 2003. In view of the Certificate of Mailing included on the copy of the Amendment filed with the instant petition, the Amendment is considered to have been filed in this Office on October 17, 2003.

Also, due to a scrivener's error, the application number was entered on the Amendment as application serial number 10/158, 287, instead of 10/156,287. The MPEP provides that "[a] minor error in the identification of the application can be corrected by the Office provided the correct identification can be quickly discovered. A review of the Amendment filed on October 17, 2003 reveals that Applicant included the title of the application, the inventor and the Examiner and Art Unit on the correspondence. Accordingly, the petition is granted.

In view of the foregoing, the holding of abandonment is hereby withdrawn.

No petition fee has been charged and none is due.

The application file is being referred to Technology Center Art Unit 3728 for continued processing in due course.

Telephone inquiries concerning this decision should be directed to the undersigned at 571-272-3232.

Derek L. Woods
Attorney/Advisor
Office of Petitions

SPE RESPONSE FOR CERTIFICATE OF CORRECTION

Paper No.: _____

DATE : 4/28/2005

TO SPE OF : ART UNIT 3600(3677)

SUBJECT : Request for Certificate of Correction on Patent No.: 6,834,863

A response is requested with respect to the accompanying request for a certificate of correction.

Please complete this form and return with file, within **7** days to:
Certificates of Correction Branch - PK 3-922
Palm location **7580** - Tel. No. 305-8309

With respect to the change(s) requested, correcting Office and/or Applicant's errors, should the patent read as shown in the certificate of correction? No new matter should be introduced, nor should the scope or meaning of the claims be changed.

Should the dependency change?

Ernest C. White, LIE305-8339
Certificates of Correction Branch

Thank You For Your Assistance

The request for issuing the above-identified correction(s) is hereby:
Note your decision on the appropriate box.

- ☐ **Approved** — All changes apply.
- ☐ **Approved in Part** — Specify below which changes **do not** apply.
- ☒ **Denied** — State the reasons for denial below.

Comments:

Proposed amendment would change the scope of the claims.

SPE

3677
Art Unit

PTOL-306 (REV. 7/03)

U.S. DEPARTMENT OF COMMERCE Patent and Trademark Office

UNITED STATES PATENT AND TRADEMARK OFFICE

Commissioner for Patents
United States Patent and Trademark Office
P.O. Box 1450
Alexandria, VA 22313-1450
www.uspto.gov

Paper No. 10

J C PATENTS, INC.
4 VENTURE, SUITE 250
IRVINE, CA 92618

NOV 21 2005

In re Application of:
SHUI-CHIN HUANG et al.
Serial No. 10/156,323
Filed: May 24, 2002
Attorney Docket No. **JCLA8301**

DECISION ON PETITION
TO WITHDRAW HOLDING
OF ABANDONMENT

This is a response to the petition under 37 C.F.R. § 1.181, filed July 26, 2004, to withdraw the holding of abandonment of the above-identified application. No fee is required.

The petition is **DENIED.**

This application became abandoned for failure to timely respond to the final Office action mailed May 7, 2003.

Petitioner asserts that applicant was unable to respond to the advisory Office action because it was mailed November 19, 2003, twelve days after the six-month statutory period for response had ended. Petitioner further asserts that applicant was entitled to further action from the United States Patent & Trademark Office prior to expiration of the statutory six-month period because applicant had timely filed an Amendment and Response to the final Office action.

A review of the application file record reveals that an Amendment and Response was filed August 7, 2003. In response to the Amendment and Response, an advisory Office action was mailed November 19, 2003. The application had become abandoned as a matter of law on November 8, 2003.

Consideration of proposed after final amendments are addressed in 37 CFR § 1.113, 37 CFR §1.116, and MPEP 714.13 reproduced, in part, below:

37 CFR § 1.113 (c) states, in part, the following:

"(c) reply to a final rejection or action must include cancellation of or appeal from the rejection of, each rejected claim. If any claim stands allowed, the reply to a final rejection or action must comply with any requirements or objections as to form."

37 CFR § 1.116 (b) and (c) state, in part, the following:

"(b) ... amendments may be made canceling claims or complying with any requirement of form expressly set forth in a previous Office action. Amendments presenting rejected claims in better form for consideration on appeal may be admitted. The admission of, or refusal to admit, an amendment after a final rejection, a final action, an action closing prosecution, or any related proceedings will not operate to relieve the application or patent under reexamination from its condition as subject to appeal or to save the application from abandonment..."

"(c) If amendments touching the merits of the application or patent under reexamination are presented after final rejection, or after appeal has been taken, or when such amendment might not otherwise be proper, they may be admitted upon a showing of good and sufficient reasons why they are necessary and were not earlier presented."

Section 714.13 of the MPEP states, in part, the following:

"An amendment filed at any time after final rejection but before an appeal brief is filed, may be entered upon or after filing of an appeal brief provided the total effect of the amendment is to (A) remove issues for appeal, and/or (B) adopt examiner suggestions."

* * *

"It should be noted that under 37 CFR 1.181(f), the filing of a 37 CFR 1.181 petition will not stay the period for reply to an examiner's action which may be running against an application. See MPEP § 1207 for appeal and post-appeal procedure."

The Amendment and Response after final Office action received on August 7, 2003 was duly considered by the examiner and did not place the application in condition for allowance for the reasons stated in the advisory Office action.

Under current practice, since the Amendment and Response after final Office action did not placed the application in condition for allowance, a proper reply to the final Office action was not timely filed and accordingly the application became abandoned by operation of law for failure to timely file a reply to the final Office action of May 7, 2003.

A Notice of Appeal (and fee) or a request for continued examination (RCE) and fee or another amendment which placed the application in condition for allowance would have been a proper reply to the final Office action if timely filed. A review of the application file does reveal that any such papers were filed.

In view of the above stated reasons, the application remains abandoned and the petition to withdraw the holding of abandonment for the above-identified application is denied.

Any request for reconsideration must be filed within TWO MONTHS of the date of this decision.

Petitioner may wish to consider filing a petition under 37 CFR § 1.137(a) or (b) requesting that the application be revived. A petition under 37 CFR § 1.137(b) must be accompanied by: (1) the required reply to the outstanding Office action; (2) a statement that the entire delay in filing the required reply from the due date for the reply until the filing of a grantable petition pursuant to 37 CFR 1.137(b) was unintentional; (3) any terminal disclaimer required pursuant to 37 CFR § 1.137(c); and (4) the petition fee as set forth in 37 CFR § 1.17(m). No consideration to the substance of a petition will be given until this fee is received.

Inquiries regarding this decision should be directed to Jose' G. Dees at (703) 308-4628.

Sharon A. Gibson, Director
Technology Center 2800
Semiconductor, Electrical and Optical
Systems and Components

UNITED STATES PATENT AND TRADEMARK OFFICE

COMMISSIONER FOR PATENTS
UNITED STATES PATENT AND TRADEMARK OFFICE
P.O. BOX 1450
ALEXANDRIA, VA 22313-1450
www.uspto.gov

Paper No. 13

J C PATENTS, INC.
4 VENTURE, SUITE 250
IRVINE, CA 92618

COPY MAILED

DEC 20 2006

OFFICE OF PETITIONS

ON PETITION

In re Application of	:	
Shui-Chin Huang, et al.	:	
Application No. 10/156,323	:	
Filed: May 24, 2002	:	
Attorney Docket No. JCLA8301	:	

This is a decision on the petition under 37 CFR 1.137(b), filed January 23, 2006, to revive the above-identified application.

The application became abandoned for failure to timely reply to the final Office action mailed May 7, 2003. A Notice of Abandonment was mailed on December 29, 2003. On July 26, 2004, a petition under 37 CFR 1.181 was filed to withdraw the holding of abandonment. The petition was subsequently denied in a decision mailed November 21, 2005. On January 23, 2006, the present petition was filed. The application is being revived for consideration of a submission under 37 CFR 1.114 (request for continued examination).

The petition is **GRANTED**.

The application file is being forwarded to Technology Center AU 2813, for further processing of the request for continued examination under 37 CFR 1.114 filed January 23, 2006.

Telephone inquiries concerning this decision should be directed to the undersigned at (571) 272-3204. Inquiries relating to further prosecution should be directed to the Technology Center.

Sherry D. Brinkley
Petitions Examiner
Office of Petitions

SPE Colaianni

SPE RESPONSE FOR CERTIFICATE OF CORRECTION 10/156,347

Paper No.: _____

DATE : 2/14/06

TO SPE OF : ART UNIT 1732

SUBJECT : Request for Certificate of Correction on Patent No.: 6939499

A response is requested with respect to the accompanying request for a certificate of correction.

Please complete this form and return with file, within 7 days to:
Palm location **7580, Certificates of Correction Branch – South Tower – 9A22**
If response is for an IFW, **return to employee (named below) via PUBSCofC Team in MADRAS.**
With respect to the change(s) requested, correcting Office and/or Applicant's errors, should the patent read as shown in the certificate of correction (COCIN)? No new matter should be introduced, nor should the scope or meaning of the claims be changed.

Thank You For Your Assistance

Lamonte M. Newsome
Certificates of Correction Branch
Tel. No. 703-305-8309

The request for issuing the above-identified correction(s) is hereby:
Note your decision on the appropriate box.

- ☐ **Approved** — **All** changes apply.
- ☒ **Approved in Part** — Specify below which changes **do not** apply.
- ☐ **Denied** — State the reasons for denial below.

Comments:

The change to the title change does not apply because the requested change is incorrect, i.e. the JP document number is incorrect.

Christina Johnson
SPE [signature]

5/10/06 1732
Art Unit

PTOL-306 (REV. 7/03)
U.S. DEPARTMENT OF COMMERCE Patent and Trademark Office

UNITED STATES PATENT AND TRADEMARK OFFICE

Commissioner for Patents
United States Patent and Trademark Office
P.O. Box 1450
Alexandria, VA 22313-1450
www.uspto.gov

TEXAS INSTRUMENTS INCORPORATED
P.O. BOX 655474, M/S 3999
DALLAS, TX 75262

COPY MAILED

NOV 05 2007

OFFICE OF PETITIONS

In re Application of :
John G. McDonough et al :
Application No. 10/156,355 : ON PETITION
Filed: May 28, 2002 :
Attorney Docket No. TI-33418 :

This is a decision on the petition under 37 CFR 1.137(b), filed July 20, 2007, to revive the above-identified application.

The petition is **GRANTED**.

The above-identified application became abandoned for failure to reply in a timely manner to the non-final Office action mailed August 22, 2006, which set a shortened statutory period for reply of three (3) months. No extension of time under the provisions of 37 CFR 1.136(a) were obtained. Accordingly, the above-identified application became abandoned on November 23, 2006.

There is no indication that the person signing the instant petition was ever given a power of attorney or authorization of agent to prosecute the above-identified application. If the person signing the instant petition desires to receive future correspondence regarding this application, the appropriate power of attorney or authorization of agent must be submitted. While a courtesy copy of this decision is being mailed to the person signing the instant petition, all future correspondence will be directed to the address currently of record until such time as appropriate instructions are received to the contrary.

Telephone inquiries concerning this decision should be directed to Irvin Dingle at (571) 272-3210.

This matter is being referred to Technology Center AU 2611 for further processing.

Irvin Dingle
Petitions Examiner
Office of Petitions

cc: James A. Flight
Hanley, Flight, & Zimmerman, LLC
Suite 2100
150 South Wacker Drive
Chicago, IL 60606

UNITED STATES PATENT AND TRADEMARK OFFICE

Commissioner for Patents
United States Patent and Trademark Office
P.O. Box 1450
Alexandria, VA 22313-1450
www.uspto.gov

ALSTON & BIRD
BANK OF AMERICA PLAZA
101 SOUTH TRYON STREET
SUITE 4000
CHARLOTTE, NC 28280-4000

COPY MAILED

AUG 2 5 2004

OFFICE OF PETITIONS

ON PETITION

In re Application of	:	
Thomas H. Dodd III et al	:	
Application No. 10/156,357	:	
Filed: May 28, 2002	:	
Attorney Docket No. 40856/172797	:	

This is a decision on the petition, filed August 16 ,2004, under 37 CFR 1.313(c)(3) to withdraw the above-identified application from issue after payment of the issue fee.

The petition is **GRANTED**.

The above-identified application is withdrawn from issue for express abandonment in favor of a continuing application filed on August 12, 2004.

The application is hereby withdrawn from issue, and the abandonment is hereby recognized.

Petitioner requests a refund of the $320.00 issue fee submitted on July 1, 2004.

Petitioner's attention is directed to MPEP §1308.01 which states that a refund may be requested**f the examiner has withdrawn the application from issue for the purpose of reopening prosecution.** However, in the instant application, the examiner has not reopened prosecution of the application.

Petitioner's attention is further directed to 37 CFR 1.26 which states:

> The Commissioner may refund any fee paid by mistake or in excess of that required. A change of purpose after the payment of a fee, such as when a party desires to withdraw a patent or trademark filing for which the fee was paid, including an application, an appeal, or a request for an oral hearing, will not entitle a party to a refund of such fee.

In this case, the payment of the issue/publication fee was owed and required by law at the time of payment thereof. Therefore, payment was not made by mistake or in excess of that required nor was there a mistake in payment as contemplated by 37 CFR 1.26.

While the $150.00 advance order fee was not paid by mistake, this fee was not owing or required at the time of payment thereof. Accordingly, the $150.00 advance order fee will be credited to petitioner's Deposit Account No. 16-0605.

Telephone inquiries should be directed to Wan Laymon at (703) 306-5685.

Wan Laymon
Petitions Examiner
Office of Petitions
Office of the Deputy Commissioner
for Patent Examination Policy

UNITED STATES PATENT AND TRADEMARK OFFICE

Commissioner for Patents
United States Patent and Trademark Office
P.O. Box 1450
Alexandria, VA 22313-1450
www.uspto.gov

HARNESS, DICKEY & PIERCE, PLC
P. O. BOX 828
BLOOMFIELD HILLS, MI 48303

COPY MAILED

MAY 04 2007

OFFICE OF PETITIONS

In re Application of Lick Ho Song et al Application No. 10/156,358 Filed: May 28, 2002 Attorney Docket No. 9242-000008	DECISION GRANTING PETITION UNDER 37 CFR 1.137(b)

This is a decision on the petition under 37 CFR 1.137(b), filed September 5, 2006, to revive the above-identified application.

The petition is **GRANTED**.

The above-identified application became abandoned for failure to reply in a timely manner to the non-final Office action mailed October 4, 2005, which set a shortened statutory period for reply of three (3) months. No extensions of time under the provisions of 37 CFR 1.136(a) were obtained. Accordingly, the above-identified application became abandoned on January 5, 2006. A Notice of Abandonment was mailed on May 31, 2006.

The petition satisfies the conditions for revival pursuant to the provisions of 37 CFR 1.137(b) in that (1) the reply, (2) the $750 petition fee, and (3) the required statement of unintentional delay have been received. Accordingly, the reply to the non-final Office action of October 4, 2005 is accepted as having been unintentionally delayed.

Telephone inquiries concerning this decision should be directed to the undersigned at (571) 272-3218.

This matter is being referred to Technology Center AU 2611 for appropriate action in the normal course of business on the reply received September 5, 2006.

Frances Hicks
Petitions Examiner
Office of Petitions

UNITED STATES PATENT AND TRADEMARK OFFICE

Commissioner for Patents
United States Patent and Trademark Office
P.O. Box 1450
Alexandria, VA 22313-1450
www.uspto.gov

Paper No. 8

FURGANG & ADWAR
2 CROSFIELD AVENUE
WEST NYACK, NY 10994

COPY MAILED

JUL 2 8 2004

OFFICE OF PETITIONS

In re Application of :
Jay Kim :
Application No. 10/156,368 : ON PETITION
Filed: May 28, 2002 :
Attorney Docket No. 8291-P :

This is a decision on the petition under 37 CFR 1.137(b), filed June 30, 2004, to revive the above-identified application.

The petition is **GRANTED**.

The above-identified application became abandoned for failure to reply in a timely manner to the non-final Office action mailed July 8, 2003, which set a shortened statutory period for reply of three (3) months. No extensions of time under the provisions of 37 CFR 1.136(a) were obtained. Accordingly, the above-identified application became abandoned on October 9, 2003.

Telephone inquiries concerning this decision should be directed to Wan Laymon at (703) 306-5685.

The application file is being forwarded to Technology Center AU 3635.

Wan Laymon
Petitions Examiner
Office of Petitions
Office of the Deputy Commissioner
for Patent Examination Policy

UNITED STATES PATENT AND TRADEMARK OFFICE

COMMISSIONER FOR PATENTS
UNITED STATES PATENT AND TRADEMARK OFFICE
P.O. BOX 1450
ALEXANDRIA, VA 22313-1450
www.uspto.gov

Paper No. 6

COASTAL SYSTEMS STATION
DAHLGREN DIVISION
NAVAL SURFACE WARFARE CENTER
6703 W HWY 98 CODE CP2L
PANAMA CITY, FL 32407-7001

COPY MAILED

FEB 17 2004

OFFICE OF PETITIONS

In re Application of
Kucik, Daniel P.
Application No. 10/156,370
Filed: May 28, 2002
Attorney Docket No. 83706

ON PETITION

This is a decision on the petition under 37 C.F.R. § 1.137(b), filed February 2, 2004, to revive the above-identified application.

The petition is **granted.**

The above-identified application became abandoned for failure to reply in a timely manner to the Notice to File Missing Parts of Application (Notice) mailed August 5, 2002. The Notice set a period for reply of two (2) months from the mail date of the Notice. No extensions of time under the provisions of 37 CFR 1.136(a) were obtained. Accordingly, the above-identified application became abandoned on October 6, 2002. A Notice of Abandonment was mailed on January 6, 2004.

Petitioner has met the requirements to revive the above-identified application pursuant to 37 CFR 1.137(b).

The file does not indicate a change of address has been submitted, although the address given on the petition differs from the address of record. If appropriate, a request to change the address of record should be filed. A courtesy copy of this decision is being mailed to the address given on the petition; however, the Office will mail all future correspondence solely to the address of record.

The file is now being forwarded to the Office of Initial Patent Examination for further processing.

Telephone inquiries should be directed to the undersigned at (703) 306-0482.

Liana Chase
Petitions Examiner
Office of Petitions
Office of the Deputy Commissioner
for Patent Examination Policy

cc: Harvey A. Gilbert
Naval Surface Warfare Center Panama City
110 Vernon Avenue
Panama City, FL 32407-7001

UNITED STATES PATENT AND TRADEMARK OFFICE

Commissioner for Patents
United States Patent and Trademark Office
P.O. Box 1450
Alexandria, VA 22313-1450
www.uspto.gov

RATNER PRESTIA
P.O. BOX 980
VALLEY FORGE, PA 19482-0980

COPY MAILED

OCT 0 2 2006

OFFICE OF PETITIONS

In re Application of	:	
Frank S. Glaug, et. al.	:	
Application No. 10/156,385	:	ON PETITION
Filed: May 28, 2002	:	
Attorney Docket No. TC04-132US	:	

This is a decision on the petition under 37 CFR 1.137(b), filed on August 4, 2006, to revive the above-identified application.

The application became abandoned for failure to respond to the non-final Office action mailed July 5, 2005. A Notice of Abandonment was mailed on January 17, 2006.

The petition satisfies the requirements of 37 CFR 1.137(b) in that petitioner has supplied (1) the reply in the form an amendment; (2) the petition fee of $1,500; and (3) an adequate statement of unintentional delay. Therefore, the petition is **GRANTED**.

The Power of Attorney and Correspondence Address Indication form filed August 4, 2006, has been accepted and made of record.

This application file is being referred to Technology Center Art Unit 3761, for review of the amendment filed with the instant petition.

Telephone inquiries concerning this decision should be directed to the undersigned at (571) 272-3226.

Andrea Smith
Petitions Examiner
Office of Petitions

UNITED STATES PATENT AND TRADEMARK OFFICE

Commissioner for Patents
United States Patent and Trademark Office
P.O. Box 1450
Alexandria, VA 22313-1450
www.uspto.gov

MAILED

JUN 0 9 2004

Office of the Director
Group 3600

Paul S. Madan
MADAN, MOSSMAN & SRIRAM, PC
2603 Augusta, Suite 700
Houston, TX 77057-1130

In re Application of:	:	
Luis Mendez, et.al.	:	NOTICE OF WITHDRAWAL
Application No. 10/156,399	:	FROM ISSUE
Filed: May 28, 2002	:	UNDER 37 CFR § 1.313(b)
Attorney Docket No. 284-12445-US	:	

The above-identified application is withdrawn from issue after payment of the issue fee due to the unpatentability of one or more claims. See 37 CFR § 1.313(b).

The above-identified application is hereby withdrawn from issue.

The issue fee and publication fee are refundable upon written request. Applicant may also request that the fee be credited to a specified Deposit Account. Applicant may, however, wait until such time as the application is either allowed or abandoned to make such request. If the application is subsequently allowed, upon receipt of a new Notice of Allowance and Issue and Publication Fee Due, applicant may further request that the previously submitted issue fee and publication fee be applied toward payment of the issue fee and publication fee in the amount identified in the new Notice of Allowance and Issue and Publication Fee Due. This request, and any balance due, must be received on or before the due date noted in the new Notice of Allowance and Issue and Publication Fee Due in order to prevent abandonment of the application. If the application is abandoned, applicant may request either a refund or a credit to a specified Deposit Account.

Telephone inquires should be directed to Supervisory Patent Examiner David Bagnell at (703) 308-2151.

The above-identified application is being forwarded to the examiner for prompt appropriate action, including notifying applicant of the new status of this application.

Donald T. Hajec, Director
Technology Center 3600

UNITED STATES PATENT AND TRADEMARK OFFICE

COMMISSIONER FOR PATENTS
UNITED STATES PATENT AND TRADEMARK OFFICE
P.O. BOX 1450
ALEXANDRIA, VA 22313-1450
www.uspto.gov

SCHLUMBERGER OILFIELD SERVICES
200 GILLINGHAM LANE
MD 200-9
SUGARLAND, TX 77478

COPY MAILED
APR 21 2006
OFFICE OF PETITIONS

In re Application of :
Ciglenec, et al. : DECISION ON PETITION
Application No. 10/156,403 :
Filed: May 28, 2002 :
Docket No.: 19.0247DIV2 :

This is a decision on the petition under 37 C.F.R. § 1.137(b), filed March 30, 2006, to revive the above-identified application.

The petition is **GRANTED**.

This application became abandoned September 15, 2005 for failure to timely submit a proper reply to the non-final Office action mailed June 14, 2005. The non-final Office action set a three (3) month shortened statutory period of time for reply. No extensions of time in accordance with 37 C.F.R. § 1.136 were timely requested. Notice of Abandonment was mailed March 27, 2006.

A grantable petition pursuant to 37 C.F.R. § 1.137(b) must be accompanied by: (1) the required reply to the outstanding Office action or notice, unless previously filed; (2) the petition fee as set forth in 37 C.F.R. § 1.17(m); (3) a statement that the entire delay in filing the required reply from the due date for the reply until the filing of a grantable petition pursuant to 37 C.F.R. § 1.137(b) was unintentional; and (4) any terminal disclaimer (and fee set forth in 37 C.F.R. § 1.20(d)) required pursuant to 37 C.F.R. § 1.137(c).

The instant petition has been reviewed and found in compliance with the provisions of 37 C.F.R. § 1.137(b). Accordingly, the failure to timely submit a proper reply to the non-final Office action is accepted as having been unintentionally delayed.

This application is being forwarded to Technology Center 2600 for further processing.

Telephone inquiries concerning this matter may be directed to the undersigned at (571) 272-3205.

Alesia M. Brown
Petitions Attorney
Office of Petitions

UNITED STATES PATENT AND TRADEMARK OFFICE

Commissioner for Patents
United States Patent and Trademark Office
P.O. Box 1450
Alexandria, VA 22313-1450
www.uspto.gov

STEVEN F WEINSTOCK
ABBOTT LABORATORIES
100 ABBOTT PARK RD
DEPT 377/AP6A
ABBOTT PARK IL 60064-6008

COPY MAILED
MAY 06 2005
OFFICE OF PETITIONS

In re Application of	:	
Zhang, et al.	:	
Application No. 10/156,404	:	ON PETITION
Filed: May 28, 2002	:	
Attorney Docket No. 6820.US.01	:	

This is a decision on the petition under 37 CFR 1.137(b), filed October 29, 2004.

The petition under 37 CFR 1.137(b) is **GRANTED**.

The above-identified application became abandoned for failure to timely file a response to the non-final Office action mailed August 7, 2003. This Office action set a shortened statutory period for reply of three months. No extensions of time under 37 CFR 1.136(a) were obtained. Accordingly, the above-identified application became abandoned on November 8, 2003. A Notice of Abandonment was mailed on April 2, 2004.

Petitioner has paid the petition fee, submitted the required reply in the form of an amendment, and made the proper statement of unintentional delay.

The application file is being forwarded to Group Art Unit 1623 for consideration of the amendment filed October 29, 2004.

Telephone inquiries concerning this decision should be directed to the undersigned at (571)272-3207.

Cliff Congo
Petitions Attorney
Office of Petitions

UNITED STATES PATENT AND TRADEMARK OFFICE

Commissioner for Patents
United States Patent and Trademark Office
P.O. Box 1450
Alexandria, VA 22313-1450
www.uspto.gov

COPY MAILED

JUN 0 4 2008

OFFICE OF PETITIONS

JOHANNES SCHNEEBERGER
118B MENDOCINO ST.
BRISBANE, CA 94005

In re Application of	:	
Walter Vincent MURPHY	:	
Application No. 10/156,456	:	DECISION ON PETITION
Filed: May 28, 2002	:	TO WITHDRAW
Attorney Docket No. MURPH 301	:	FROM RECORD
	:	

This is a decision on the Request to Withdraw as attorney or agent of record under 37 C.F.R. § 1.36(b), filed June 10, 2007.

The request is **APPROVED**.

A grantable request to withdraw as attorney/agent of record must be signed by every attorney/agent seeking to withdraw or contain a clear indication that one attorney is signing on behalf of another/others. A request to withdraw will not be approved unless at least 30 (thirty) days would remain between the date of approval and the later of the expiration date of a time to file a response or the expiration date of the maximum time period which can be extended under 37 C.F.R. § 1.136(a).

The request was signed by Johannes Schneeberger on behalf of all attorneys/agents associated with Customer No. 55524.

All attorneys/agents associated with Customer No. 55524 have been withdrawn.

Applicant is reminded that there is no attorney of record at this time.

The correspondence address of record has been changed and the new correspondence address is the address indicated below until otherwise properly notified by the applicant.

Telephone inquiries concerning this decision should be directed to the undersigned at 571-272-6735.

Diane Goodwyn
Petitions Examiner
Office of Petitions

cc: WALTER VINCENT MURPHY
210 NORTHWOOD DRIVE
SOUTH SAN FRANCISCO, CA 94080-5831

UNITED STATES PATENT AND TRADEMARK OFFICE

UNITED STATES DEPARTMENT OF COMMERCE
United States Patent and Trademark Office
Address: COMMISSIONER FOR PATENTS
P.O. Box 1450
Alexandria, Virginia 22313-1450
www.uspto.gov

APPLICATION NUMBER	FILING OR 371(C) DATE	FIRST NAMED APPLICANT	ATTY. DOCKET NO./TITLE
10/156,456	05/28/2002	Walter Vincent Murphy	MURPH301

CONFIRMATION NO. 3557

POWER OF ATTORNEY NOTICE

55524
JOHANNES SCHNEEBERGER
118B MENDOCINO ST.
BRISBANE, CA 94005

OC000000030290904

Date Mailed: 06/04/2008

NOTICE REGARDING CHANGE OF POWER OF ATTORNEY

This is in response to the Power of Attorney filed 06/10/2007.

- The withdrawal as attorney in this application has been accepted. Future correspondence will be mailed to the new address of record. 37 CFR 1.33.

/dcgoodwyn/

Office of Data Management, Application Assistance Unit (571) 272-4000, or (571) 272-4200, or 1-888-786-0101

UNITED STATES PATENT AND TRADEMARK OFFICE

Commissioner for Patents
United States Patent and Trademark Office
P.O. Box 1450
Alexandria, VA 22313-1450
www.uspto.gov

Paper No. 9

JOHN S. ARTZ
ARTZ & ARTZ, P.C.
SUITE 250
28333 TELEGRAPH ROAD
SOUTHFIELD, MI 48034

FAX RECEIVED
FEB 08 2005
CANCELLED
OFFICE OF PETITIONS

In re Application of :
Russell W. Strong :
Application No. 10/156,466 : ON PETITION
Filed: May 28, 2002 :
Attorney Docket No. IVI 1001 PUS :

COPY MAILED
FEB 08 2005
OFFICE OF PETITIONS

This is a decision on the petition under 37 CFR 1.137(b), filed January 24, 2005, to revive the above-identified application.

The petition is **DISMISSED**.

Any request for reconsideration of this decision must be submitted within TWO (2) MONTHS from the mail date of this decision. Extensions of time under 37 CFR 1.136(a) are permitted. The reconsideration request should include a cover letter entitled "Renewed Petition under 37 CFR 1.137(b)." No additional fee is required with any renewed petition. Petitioner is advised that this is **not** a final agency action decision.

The above-identified application became abandoned for failure to reply in a timely manner to the non-final Office action mailed February 2, 2004, which set a shortened statutory period for reply of three (3) months. No extensions of time under the provisions of 37 CFR 1.136(a) were obtained. Accordingly, the above-identified application became abandoned on May 3, 2004.

A grantable petition to revive an abandoned application under 37 CFR 1.137(b) must be accompanied by: (1) the required reply (unless previously filed), which may met by the filing of a continuing application in a nonprovisional application abandoned for failure to prosecute, but must be the payment of the issue fee or any outstanding balance thereof in an application or patent, abandoned or lapsed for failure to pay the issue fee or any portion thereof; (2) the petition fee as set forth in 37 CFR 1.17(m); (3) a statement that the entire delay in filing the required reply from the due date for the reply until the filing of a grantable petition pursuant to 37 CFR 1.137(b) was unintentional; and (4) any terminal disclaimer (and fee as set forth in 37 CFR 1.20(d)). This petition lacks item (2) above.

As to item (2), applicant must pay a petition fee of $750.00 in order for the petition to be granted.

Further correspondence with respect to this matter should be addressed as follows:

By mail: Mail Stop PETITIONS
Commissioner for Patents
Post Office Box 1450
Alexandria, VA 22313-1450

By hand: Customer Service Window
Randolph Building
401 Dulany Street
Alexandria, VA 22314

By fax: (703) 872-9306
ATTN: Office of Petitions

Telephone inquiries concerning this decision should be directed to Wan Laymon at (571) 272-3220.

Wan Laymon
Wan Laymon
Petitions Examiner
Office of Petitions
Office of the Deputy Commissioner
for Patent Examination Policy

UNITED STATES PATENT AND TRADEMARK OFFICE

Commissioner for Patents
United States Patent and Trademark Office
P.O. Box 1450
Alexandria, VA 22313-1450
www.uspto.gov

Paper No. 11

JOHN S. ARTZ
ARTS & ARTZ, P.C.
28333 TELEGRAPH ROAD
SOUTHFIELD, MI 48034

COPY MAILED

MAR 3 0 2005

OFFICE OF PETITIONS

In re Application of	:	
Russell W. Strong	:	
Application No. 10/156,466	:	ON PETITION
Filed: May 28, 2002	:	
Attorney Docket No. IVI 1001 PUS	:	

This is a decision on the renewed petition under 37 CFR 1.137(b), filed March 21, 2005, to revive the above-identified application.

The petition is **GRANTED**.

Pursuant to petitioner's authorization, Deposit Account No. 50-0476 was charged $750.00 for the petition to revive an unintentionally abandoned application.

Telephone inquiries concerning this decision should be directed to Wan Laymon at (571) 272-3220.

This file is being forwarded to Publishing Division.

Wan Laymon

Wan Laymon
Petitions Examiner
Office of Petitions
Office of the Deputy Commissioner
for Patent Examination Policy

UNITED STATES PATENT AND TRADEMARK OFFICE

Commissioner for Patents
United States Patent and Trademark Office
P.O. Box 1450
Alexandria, VA 22313-1450
www.uspto.gov

SEAN M. McGINN
McGINN & GIBB PLLC
8321 OLD COURTHOUSE ROAD, SUITE 200
VIENNA, VA 22182-3817

COPY MAILED
AUG 0 5 2004
OFFICE OF PETITIONS

In re Application of :
Yoshinobu Suehiro et al :
Application No. 10/156,502 : DECISION GRANTING PETITION
Filed: May 29, 2002 : UNDER 37 CFR 1.313(c)(2)
Attorney Docket No. NGB.188 :

This is a decision on the petition, filed July 27, 2004, under 37 CFR 1.313(c)(2) to withdraw the above-identified application from issue after payment of the issue fee.

The petition is **GRANTED**.

The above-identified application is withdrawn from issue for consideration of a submission under 37 CFR 1.114 (request for continued examination). See 37 CFR 1.313(c)(2).

Petitioner is advised that the issue fee paid on June 4, 2004 in the above-identified application cannot be refunded. If, however, the above-identified application is again allowed, petitioner may request that it be applied towards the issue fee required by the new Notice of Allowance.[1]

Telephone inquiries should be directed to the undersigned at (703) 305-8680.

This matter is being referred to Technology Center AU 2879 for processing of the request for continued examination under 37 CFR 1.114 and for consideration of the concurrently filed Information Disclosure Statement.

Frances Hicks
Frances Hicks
Petitions Examiner
Office of Petitions
Office of the Deputy Commissioner
for Patent Examination Policy

---

[1] The request to apply the issue fee to the new Notice may be satisfied by completing and returning the new Issue Fee Transmittal Form PTOL-85(b), which includes the following language thereon: "Commissioner for Patents is requested to apply the Issue Fee and Publication Fee (if any) or re-apply any previously paid issue fee to the application identified above." Petitioner is advised that, whether a fee is indicated as being due or not, the Issue Fee Transmittal Form **must** be completed and timely submitted to avoid abandonment. Note the language in bold text on the first page of the Notice of Allowance and Fee(s) Due (PTOL-85).

UNITED STATES PATENT AND TRADEMARK OFFICE

Commissioner for Patents
United States Patent and Trademark Office
P.O. Box 1450
Alexandria, VA 22313-1450
www.uspto.gov

Paper No. 05162005

STALLMAN & POLLOCK LLP
SUITE 2200
353 SACRAMENTO STREET
SAN FRANCISCO CA 94111

In re Application of: Jon Opsal Serial No.: 10/156,504 Filed: May 28, 2002 Attorney Docket No.: TWI-18710	: : : : :	PETITION FOR CORRECTION OF INVENTORSHIP UNDER 37 CFR § 1.48(a)

This is a decision on the petition filed March 31, 2003 (and again January 8, 2004) to correct inventorship under 37 CFR 1.48(a).

The petition is GRANTED.

In view of the papers filed March 31, 2003 it has been found that this non-provisional application, as filed, through error and without deceptive intent, improperly set forth the inventorship, and accordingly, this application has been corrected in compliance with 37 CFR 1.48 (a). The inventorship of this application has been changed by adding the names:

David Y. Wang

The application will be forwarded to the Office of Initial Patent Examination (OIPE) for issuance of a corrected filing receipt, and correction of Office records to reflect the inventorship as corrected.

Gregory J. Toatley, Jr.
Supervisory Patent Examiner,
Art Unit 2877

UNITED STATES PATENT AND TRADEMARK OFFICE

UNITED STATES DEPARTMENT OF COMMERCE
United States Patent and Trademark Office
Address: COMMISSIONER FOR PATENTS
P.O. Box 1450
Alexandria, Virginia 22313-1450
www.uspto.gov

APPLICATION NO.	FILING DATE	FIRST NAMED INVENTOR	ATTORNEY DOCKET NO.	CONFIRMATION NO.
10/156,504	05/28/2002	Jon Opsal	TWI-18710	5324

28584 7590 11/02/2005

STALLMAN & POLLOCK LLP
SUITE 2200
353 SACRAMENTO STREET
SAN FRANCISCO, CA 94111

EXAMINER
PUNNOOSE, ROY M

ART UNIT	PAPER NUMBER
2877	

DATE MAILED: 11/02/2005

Please find below and/or attached an Office communication concerning this application or proceeding.

UNITED STATES PATENT AND TRADEMARK OFFICE

Commissioner for Patents
United States Patent and Trademark Office
P.O. Box 1450
Alexandria, VA 22313-1450
www.uspto.gov

Paper No. 05162005

STALLMAN & POLLOCK LLP
SUITE 2200
353 SACRAMENTO STREET
SAN FRANCISCO CA 94111

In re Application of: Jon Opsal Serial No.: 10/156,504 Filed: May 28, 2002 Attorney Docket No.: TWI-18710	PETITION FOR CORRECTION OF INVENTORSHIP UNDER 37 CFR § 1.48(a)

This is a decision on the petition filed March 31, 2003 (and again January 8, 2004) to correct inventorship under 37 CFR 1.48(a).

The petition is GRANTED.

In view of the papers filed March 31, 2003 it has been found that this non-provisional application, as filed, through error and without deceptive intent, improperly set forth the inventorship, and accordingly, this application has been corrected in compliance with 37 CFR 1.48 (a). The inventorship of this application has been changed by adding the names:

David Y. Wang

The application will be forwarded to the Office of Initial Patent Examination (OIPE) for issuance of a corrected filing receipt, and correction of Office records to reflect the inventorship as corrected.

Gregory J. Toatley, Jr.
Supervisory Patent Examiner,
Art Unit 2877

SPE RESPONSE FOR CERTIFICATE OF CORRECTION

Paper No.: _____

DATE : February 16, 2006

TO SPE OF : ART UNIT 3739

SUBJECT : Request for Certificate of Correction on Patent No.: 6,974,456,/Appl.10/156505

A response is requested with respect to the accompanying request for a certificate of correction.

Please complete this form and return with file, within **7** days to:
Palm location **7580, Certificates of Correction Branch – South Tower – 9A22**
If response is for an IFW, **return to employee (named below) via PUBSCofC Team in MADRAS.**
With respect to the change(s) requested, correcting Office and/or Applicant's errors, should the patent read as shown in the certificate of correction (COCIN)? No new matter should be introduced, nor should the scope or meaning of the claims be changed.

Magdalene Talley

Thank You For Your Assistance

Certificates of Correction Branch
Tel. No. 703-308-9309 ext. 116

The request for issuing the above-identified correction(s) is hereby:
Note your decision on the appropriate box.

- ☒ **Approved** — **All** changes apply.
- ☐ **Approved in Part** — Specify below which changes **do not** apply.
- ☐ **Denied** — State the reasons for denial below.

Comments:

Patent should be cited under "US Patent Documents" not foreign

SPE

3739
Art Unit

PTOL-306 (REV. 7/03)

U.S. DEPARTMENT OF COMMERCE Patent and Trademark Office

UNITED STATES PATENT AND TRADEMARK OFFICE

CERTIFICATE OF CORRECTION

PATENT NO. : 6,974,456 B2

DATED : 13 December 2005

INVENTOR(S) : Stuart D. Edwards, John W. Gaiser, David S. Utley

It is certified that error appears in the above-identified patent and that said Letters Patent is hereby corrected as shown below:

On the face of the issued patent under "~~Foreign~~ US Patent Documents" insert – 5,423,811 06/1995 Imran et al. --

Column 24, line 29, after "means" insert – for --

Column 24, line 47, after "apparatus" delete – for --

Column 24, line 51, after "one of" insert – a --

Column 24, line 66, after "having a deployed" delete "stare" and substitute – state --

Column 26, line 1, after "delivery" delete "device" and substitute – devices --

Column 26, line 2, delete "adapted being to adapted" and substitute – being adapted to--

Mailing Address of Sender:
Ryan Kromholz & Manion, S.C.
Post Office Box 26618
Milwaukee, Wisconsin 53226

Number of Copies: 0

FEB 03 2006

UNITED STATES PATENT AND TRADEMARK OFFICE

Commissioner for Patents
United States Patent and Trademark Office
P.O. Box 1450
Alexandria, VA 22313-1450
www.uspto.gov

Paper No. 040405

WILLIAM, MORGAN & AMERSON, P.C.
10333 RICHMOND, SUITE 1100
HOUSTON, TX 77042

JUL 21 2005

In re Application of:	:	
DUPRIEST	:	
Serial No.: 10/156,520	:	DECISION ON REQUEST TO WITHDRAW
Filed: May 28, 2002	:	FROM RECORD
Attorney Docket No.: **2063.002600**	:	

This is a decision on the request to withdraw as attorney/agent of record under 37 C.F.R. § 1.36, filed March 29, 2005.

A grantable request to withdraw as attorney of record must be signed by every attorney seeking to withdraw or contain a clear indication that one attorney is signing on behalf of others. A request to withdraw will not be approved unless at least thirty (30) days would remain between the date of approval and the later of the expiration date of a time to file a response or the expiration date of the maximum time period, which can be extended under 37 C.F.R. § 1.136(a).

The request meets all the above stated requirements. The request was signed by Jeffrey Pyle, on behalf of himself and all the attorneys/agents of record. There is no outstanding Office action at this time.

The request is **APPROVED**.

All future communications from the Office will be directed to Daren C. Davis, at the below address, until otherwise notified by applicant.

Inquiries related to this decision should be directed to Lissi Marquis at (571) 272-1596.

Lissi Marquis, Special Programs Examiner
Technology Center 2800
Semiconductors, Electrical and Optical
Systems and Components

cc: DAREN C. DAVIS
LAW OFFICES OF JAMES E. WALTON
115 NW NEWTON DRIVE, SUITE B
BURLESON, TX 78028

UNITED STATES PATENT AND TRADEMARK OFFICE

COMMISSIONER FOR PATENTS
UNITED STATES PATENT AND TRADEMARK OFFICE
P.O. BOX 1450
ALEXANDRIA, VA 22313-1450
www.uspto.gov

DEC - 5 2003

HUNTON & WILLIAMS
INTELLECTUAL PROPERTY DEPARTMENT
1900 K STREET, N.W.
SUITE 1200
WASHINGTON DC 20006-1109

In re Application of	:
Thomas Piccariello et al	:
Serial No.: 10/156,527	: PETITION DECISION
Filed: May 29, 2002	:
Attorney Docket No.: 54719.000063	:

This is a response to the petition under 37 CFR 1.59(b), filed April 11, 2003, to expunge information from the above identified application. The delay in acting on this petition is regretted, but has been occasioned by the file being converted to an Image File Wrapper (IFW) file.

Petitioner requests that an Information Disclosure Statement (IDS), filed March 25, 2003, be expunged from the record. The petition fee set forth in 37 CFR 1.17(h) has been paid.

A review of the file shows that the IDS is present in the file. The IDS consists of citations of US patents and published applications and non-patent literature publications available to the public as well as a number of items relating to presentations, etc. Applicants request return of the entire IDS. However, it would not be appropriate to return information contained in an IDS which is available to the public and may have a bearing on the patentability determination to be made by the examiner. It is noted that information which is considered confidential may be submitted for examiner consideration in accordance with 37 CFR 1.59:

1.59 Expungement of information or copy of papers in application file.
(a) (1) Information in an application will not be expunged and returned, except as provided in paragraph (b) of this section. See § 1.618 for return of unauthorized and improper papers in interferences.
(2) Information forming part of the original disclosure (i.e., written specification including the claims, drawings, and any preliminary amendment specifically incorporated into an executed oath or declaration under § § 1.63 and 1.175) will not be expunged from the application file.
(b) An applicant may request that the Office expunge and return information, other than what is excluded by paragraph (a)(2) of this section, by filing a petition under this paragraph. Any petition

to expunge and return information from an application must include the fee set forth in § 1.17(h) and establish to the satisfaction of the Commissioner that the return of the information is appropriate.

M.P.E.P. 724.02 sets forth additional guidelines for such submissions:

724.02 Method of Submitting Trade Secret, Proprietary, and/or Protective Order Materials. Information which is considered by the party submitting the same to be either trade secret material or proprietary material, and any material subject to a protective order, must be clearly labeled as such and be filed in a sealed, clearly labeled, envelope or container. Each document or item must be clearly labeled as a "Trade Secret" document or item, a "Proprietary" document or item, or as an item or document "Subject To Protective Order." It is essential that the terms "Confidential," "Secret," and "Restricted" or "Restricted Data" not be used when marking these documents or items in order to avoid confusion with national security information documents which are marked with these terms (note also MPEP § 121). If the item or document is "Subject to Protective Order" the proceeding, including the tribunal, must be set forth on each document or item. Of course, the envelope or container, as well as each of the documents or items, must be labeled with complete identifying information for the file to which it is directed, including the Office or area to which the envelope or container is directed.
Examples of appropriate labels for such an envelope or container addressed to an application are as follows: (Appropriate changes would be made for papers filed in a reexamination file.)
A. "TRADE SECRET MATERIAL NOT OPEN TO PUBLIC. TO BE OPENED
ONLY BY EXAMINER OR OTHER AUTHORIZED U.S. PATENT AND
TRADEMARK OFFICE EMPLOYEE.
In re Application of
Application No.
Filed:
For: (Title of Invention)
TC Art Unit:
Examiner:
ATTENTION: (Current Location of Application)"

The envelope or container must be accompanied by a transmittal letter which also contains the same identifying information as the envelope or container. The transmittal letter must also state that the materials in the envelope or container are considered trade secrets or proprietary, or are subject to a protective order, and are being submitted for consideration under MPEP § 724. A petition under 37 CFR 1.59 and fee therefor (37 CFR 1.17(h)) to expunge the information, if found not to be important to a reasonable examiner in deciding whether to allow the application to issue as a patent, may also accompany the envelope or container.

724.05 Petition To Expunge Information or Copy of Papers in Application File

II. INFORMATION UNINTENTIONALLY SUBMITTED IN APPLICATION
A petition to expunge information unintentionally submitted in an application (other than information forming part of the original disclosure) may be filed under 37 CFR 1.59(b),

provided that:
(A) the Office can effect such return prior to the issuance of any patent on the application in issue;
(B) it is stated that the information submitted was unintentionally submitted and the failure to obtain its return would cause irreparable harm to the party who submitted the information or to the party in interest on whose behalf the information was submitted;
(C) the information has not otherwise been made public;
(D) there is a commitment on the part of the petitioner to retain such information for the period of any patent with regard to which such information is submitted;
(E) it is established to the satisfaction of the Commissioner that the information to be returned is not material information under 37 CFR 1.56; and
(F) the petition fee as set forth in 37 CFR 1.17(h) is included.
A request to return information that has not been clearly identified as information that may be later subject to such a request by marking and placement in a separate sealed envelope or container shall be treated on a case-by-case basis. Applicants should note that unidentified information that is a trade secret, proprietary, or subject to a protective order that is submitted in an Information Disclosure Statement may inadvertently be placed in an Office prior art search file by the examiner due to the lack of such identification and may not be retrievable.

As was noted above, the IDS contains both publicly available and apparently confidential information which was inadvertently submitted. Only the information which is confidential may be expunged. However applicants have not specifically identified such items other than to supply a complete copy of the Form 1449 which accompanied the IDS listing all of the items submitted. Such does not appear to fully meet items (B) and (E) above.

The petition is **DISMISSED** subject to resubmission in proper form with identification of materials to be returned. Any renewed petition does not require a petition fee, if promptly submitted.

Should there be any questions with respect to this decision, please contact William R. Dixon, Jr., by mail addressed to: Director, Technology Center 1600, PO BOX 1450, ALEXANDRIA, VA 22313-1450, or by telephone at (703)308-3824 or by facsimile transmission at (703) 308-7230

Bruce M. Kisliuk
Director, Technology Center 1600

UNITED STATES PATENT AND TRADEMARK OFFICE

COMMISSIONER FOR PATENTS
UNITED STATES PATENT AND TRADEMARK OFFICE
P.O. BOX 1450
ALEXANDRIA, VA 22313-1450
www.uspto.gov

MAY - 5 2004

HUNTON & WILLIAMS LLP
INTELLECTUAL PROPERTY DEPARTMENT
1900 K STREET, N.W.
SUITE 1200
WASHINGTON DC 20006-1109

In re Application of	:
Thomas Piccariello et al	:
Serial No.: 10/156,527	: PETITION DECISION
Filed: May 29, 2002	:
Attorney Docket No.: 54719.000063	:

This is a response to the renewed petition under 37 CFR 1.59(b), filed December 12, 2003, , to expunge information from the above identified application. This application has not been allowed or had an *ex parte Quayle* action mailed, however the petitions will be addressed on the merits.

Petitioner requests that some of the documents submitted March 26, 2003, as an Information Disclosure Statement be expunged from the record. Petitioner states that the material was unintentionally submitted and either: (A) that the information contains trade secret material, proprietary material and/or material that is subject to a protective order which has not been made public; or (B) that the information submitted was unintentionally submitted and the failure to obtain its return would cause irreparable harm to the party who submitted the information or to the party in interest on whose behalf the information was submitted, and the information has not otherwise been made public. The petition fee set forth in 37 CFR 1.17(h) was previously paid.

The documents appear to be directed to presentations to investment groups and other proprietary letters. Thus the documents do not relate to the merits of patentability of the application and may be expunged. Since this application has been converted to an Image File Wrapper (IFW) application the documents are not physically returnable, but access to the documents has been closed to the public (they will remain accessible to the examiner) with an annotation that they are expunged.

The renewed petition is **GRANTED**.

Should there be any questions with respect to this decision, please contact William R. Dixon, Jr., by mail addressed to: Director, Technology Center 1600, P.O. Box 1450, Alexandria, VA 22313-1450, or by telephone at 571-272-0519 or by facsimile transmission at general Office facsimile number.

Bruce M. Kisliuk
Director, Technology Center 1600

UNITED STATES PATENT AND TRADEMARK OFFICE

Commissioner for Patents
United States Patent and Trademark Office
P.O. Box 1450
Alexandria, VA 22313-1450
www.uspto.gov

HUNTON & WILLIAMS LLP
INTELLECTUAL PROPERTY DEPARTMENT
1900 K STREET, N.W.
SUITE 1200
WASHINGTON DC 20006-1109

COPY MAILED

OCT 0 6 2004

OFFICE OF PETITIONS

In re Application of	:	
Thomas Piccariello, et al.	:	DECISION ON PETITIONS
Application No. 10/156,527	:	UNDER 37 CFR 1.78(a)(3) AND
Filed: May 29, 2002	:	UNDER 37 CFR 1.78(a)(6)
Attorney Docket No. 54719.000063	:	

This is a decision on the petitions under 37 CFR §§ 1.78(a)(3) and 1.78(a)(6), filed May 18, 2004, to accept an unintentionally delayed claim under 35 U.S.C. §§120, 365(c) and 119(e) for the benefit of the prior-filed applications set forth in the concurrently filed amendment.

The petitions are **Granted**.

A petition for acceptance of a claim for late priority under 37 CFR §§ 1.78(a)(3) and 1.78(a)(6) is only applicable to those applications filed on or after November 29, 2000. Further, the petition is appropriate only after the expiration of the period specified in 37 CFR §§ 1.78(a)(2)(ii) and 1.78(a)(5)(ii). In addition, the petition under 37 CFR §§ 1.78(a)(3) and 1.78(a)(6) must be accompanied by:

(1) the reference required by 35 U.S.C. §§ 120 and 119(e) and 37 CFR §§ 1.78(a)(2)(i) and 1.78(a)(5)(i) of the prior-filed application, unless previously submitted;

(2) the surcharge set forth in § 1.17(t); and

(3) a statement that the entire delay between the date the claim was due under 37 CFR §§ 1.78(a)(2)(ii) and 1.78(a)(5)(ii) and the date the claim was filed was unintentional. The Commissioner may require additional where there is a question whether the delay was unintentional.

The instant application was filed on May 29, 2002 and was pending at the time of filing of the instant petition. A reference to the prior-filed applications has been included in an amendment to the first sentence of the specification following the title, as required by 37 CFR §§ 1.78(a)(2)(iii) and 1.78(a)(5)(iii).

Additionally, intermediate application No. 09/987,458 was filed within twelve months of provisional Application No. 60/247,622, which was filed on November 14, 2000, for which priority is claimed. A reference to the prior-filed applications has been included in an amendment to the first sentence of the specification following the title.

The instant nonprovisional application was filed after November 29, 2000, and the claim for priority herein is submitted after expiration of the period specified in 37 CFR §§ 1.78(a)(2)(ii) and 1.78(a)(5)(ii). *See* 35 U.S.C. §§ 120 and 365(c) and § 119(e). Accordingly, having found that the instant petition satisfies the conditions of 37 CFR §§ 1.78(a)(3) and 1.78(a)(6) for acceptance of an unintentionally delayed claim for priority under 35 U.S.C. §§ 120 and 365(c) and § 119(e), the petition to accept an unintentionally delayed claim of benefit to the prior-filed applications is granted.

The granting of the petition to accept the delayed benefit claim to the prior-filed applications under 37 CFR §§ 1.78(a)(3) and 1.78(a)(6) should <u>not</u> be construed as meaning that the instant application is entitled to the benefit of the filing date of the prior-filed applications. In order for the instant application to be entitled to the benefit of the prior-filed applications, all other requirements under 35 U.S.C. §120 and 1.78(a)(1) and (a)(2) and under 35 U.S.C. §119(e) and 37 CFR 1.78(a)(4) and (a)(5) must be met. Similarly, the fact that the corrected Filing Receipt accompanying this decision on petition includes the prior-filed applications should <u>not</u> be construed as meaning that applicant is entitled to the claim for benefit of priority to the prior-filed applications noted thereon. Accordingly, the examiner will, in due course, consider this benefit claim and determine whether the instant application is entitled to the benefit of the earlier filing date.

Any questions concerning this matter may be directed to Sherry D. Brinkley at (571) 272-3204.

This application is being forwarded to Technology Center Art Unit 1654 for appropriate action on the amendment submitted May 18, 2004, including consideration by the examiner of the claim under 35 U.S.C. § §120 and 365(c) and 37 CFR 1.78(a)(2) for the benefit of the prior-filed applications, and for consideration of the claim under 35 U.S.C. §119(e) and 37 CFR 1.78(a)(5) for the benefit of the prior-filed provisional application, as well as mailing a corrected filing receipt, if appropriate.

Sherry D. Brinkley
Sherry D. Brinkley
Petitions Examiner
Office of Petitions
Office of the Deputy Commissioner
for Patent Examination Policy

Karen O. Creasy
Karen O. Creasy
Petitions Examiner
Office of Petitions
Office of the Deputy Commissioner
for Patent Examination Policy

UNITED STATES PATENT AND TRADEMARK OFFICE

COMMISSIONER FOR PATENTS
UNITED STATES PATENT AND TRADEMARK OFFICE
P.O. BOX 1450
ALEXANDRIA, VA 22313-1450
www.uspto.gov

Paper No. 7

BIRCH STEWART KOLASCH & BIRCH
P.O. Box 747
Falls Church, VA 22040-0747

MAR 26 2004

In re Application of:
Kazuhiko Shirakawa
Serial No.: 10/156,558
Filed: May 29, 2002
Attorney Docket No.: **0020-4997P**

DECISION ON PETITION TO WITHDRAW HOLDING OF ABANDONMENT

This is a decision on the petition filed September 29, 2003, to withdraw the holding of abandonment in the above-identified application under 37 C.F.R. § 1.181. No fee is required.

The petition is **GRANTED.**

The application was held abandoned for failure to timely file a response to the Office action mailed on November 20, 2002. A Notice of Abandonment was mailed on July 28, 2003.

Petitioner asserts that the Office action mailed on November 20, 2002, was not received. To support this assertion, petitioner provided a statement attesting that a search of the file jacket and docket records showed that the Office action was not received. A copy of the file docket where the Office action would have been entered was also included with the petition.

A review of the written record indicates no irregularity in the mailing of the Office action, and in the absence of any irregularity there is a strong presumption that the Office action was properly mailed to practitioner at the address of record. This presumption may be overcome by a showing that the Office action was not in fact received. The showing required to establish the failure to receive an Office action must include a statement from the practitioner stating that the Office action was not received by the practitioner and attesting to the fact that a search of the file jacket and docket records indicates that the Office action was not received. A copy of the docket record where the non-received Office action would have been entered had it been received and docketed must be attached to and referenced in practitioner's statement. See "Withdrawing the Holding of Abandonment When Office Actions Are Not Received" 1156 Official Gazette 53 (November 16, 1993) and M.P.E.P. § 711.03(c).

The petition, and the attachment, is sufficient to establish a showing of non-receipt of the Office action mailed November 20, 2002.

For the above stated reason, the petition is granted. The Notice of Abandonment is hereby vacated and the holding of abandonment withdrawn. The application is restored to pending status.

The application file is being forwarded to the Technology Center 2800 support staff for re-mailing the Office action. The shortened statutory period for response set therein will be reset to run from the date the Office action is re-mailed. Extensions of time are available under 37 C.F.R. § 1.136.

Inquiries regarding this decision should be directed to Clayton E. LaBalle at (571) 272-1594.

Sharon A Gibson, Director
Technology Center 2800
Semiconductors, Electrical and Optical
Systems and Components

UNITED STATES PATENT AND TRADEMARK OFFICE

Commissioner for Patents
United States Patent and Trademark Office
P.O. Box 1450
Alexandria, VA 22313-1450
www.uspto.gov

JEROME L. JEFFERS
BAYER CORPORATION
P.O. BOX 40
ELKHART, IN 46515-0040

COPY MAILED

JUN 23 2005

OFFICE OF PETITIONS

In re Application of	:	
Frank W. Wogoman	:	
Application No. 10/156,572	:	ON PETITION
Filed: May 29, 2002	:	
Attorney Docket No. MSE #2618	:	

This is a decision on the petition under 37 CFR 1.137(b), filed May 6, 2005, to revive the above-identified application.

The petition is **GRANTED**.

The above-identified application became abandoned for failure to reply in a timely manner to the non-final Office action mailed August 24, 2004, which set a shortened statutory period for reply of three (3) months. No extensions of time under the provisions of 37 CFR 1.136(a) were obtained. Accordingly, the above-identified application became abandoned on November 25, 2004.

An extension of time under 37 CFR 1.136 must be filed prior to the expiration of the maximum extendable period for reply. See In re Application of S., 8 USPQ2d 1630, 1631 (Comm'r Pats. 1988). Accordingly, since the $1,020 extension of time submitted with the petition on May 6, 2005 was subsequent to the maximum extendable period for reply, this fee is unnecessary and will be credited to petitioner's deposit account.

Telephone inquiries concerning this decision should be directed to Wan Laymon at (571) 272-3220.

This matter is being referred to Technology Center AU 1753.

Wan Laymon
Petitions Examiner
Office of Petitions
Office of the Deputy Commissioner
for Patent Examination Policy

UNITED STATES PATENT AND TRADEMARK OFFICE

Commissioner for Patents
United States Patent and Trademark Office
P.O. Box 1450
Alexandria, VA 22313-1450
www.uspto.gov

RHODIA INC.
259 Prospect Plains Road
Cranbury NJ 08512-7500

COPY MAILED

OCT 03 2005

OFFICE OF PETITIONS

In re Application of	:
PEDUTO, Nicolangelo et al.	:
Application No.: 10/156,594	:
Filing Date: May 28, 2002	:
Docket No.: RN96174D1	:
For: PLASTIC-BASED MULTILAYER	:
STRUCTURE AND TUBE HAVING	:
MULTILAYER STRUCTURE	:

DECISION

ON PETITION UNDER

37 CFR 1.137(b)

This is a decision on Petition Under 37 CFR 1.137(b), filed on June 13, 2005.

The petition is **GRANTED**.

The above-identified application became abandoned for failure to submit corrected drawings in a timely manner, in reply to the Notice of Allowability mailed October 05, 2004, which set a non-extendable three (3) month period for reply. Accordingly, the above-identified application became abandoned on January 05, 2005.

Petitioner has met the requirements for revival under 37 CFR 1.137(b). Petitioner submitted the reply in the form of corrected drawings, approved by the draftsperson, as noted on the enclosed Form PTO-948, paid the petition fee and made the required statement of unintentional delay. Accordingly, the corrected drawings are accepted as having been unintentionally delayed.

This application is being referred to the Publishing Division.

Erin P. Thomson

Erin Thomson
Attorney Advisor
PCT Legal Administration

Francis Hecks for

Brian Hearn
Petitions Examiner
Office of Petitions

Telephone: 571-272-3292
Facsimile: 571-273-0459

Enclosure: Notice of Draftspersons' Patent Drawing Review (Form PTO-948)

UNITED STATES PATENT AND TRADEMARK OFFICE

Commissioner for Patents
United States Patent and Trademark Office
P.O. Box 1450
Alexandria, VA 22313-1450
www.uspto.gov

DAVID W. HIGHET, VP AND CHIEF IP COUNSEL
BECTON, DICKINSON AND COMPANY
1 BECTON DRIVE, MC 110
FRANKLIN LAKES, NJ 07417-1880

COPY MAILED

JUL 27 2005

OFFICE OF PETITIONS

In re Application of	:	
Jamieson W. M. Crawford	:	DECISION ON PETITION
Application No. 10/156,611	:	UNDER 37 CFR 1.78(a)(3) AND
Filed: May 24, 2002	:	UNDER 37 CFR 1.78(a)(6)
Attorney Docket No. P-3522/14	:	

This is a decision on the petitions under 37 CFR §§ 1.78(a)(3) and 1.78(a)(6), filed May 10, 2005, to accept an unintentionally delayed claim under 35 U.S.C. §§120 and 119(e) for the benefit of priority to the prior-filed application no. 09/378,976, now patent no. 6,440,104, and provisional application no. 60/098,286, which is set forth in the amendment filed concurrently with the instant petition.

The petitions are **GRANTED**.

A petition for acceptance of a claim for late priority under 37 CFR §§ 1.78(a)(3) and 1.78(a)(6) is only applicable to those applications filed on or after November 29, 2000. Further, the petition is appropriate only after the expiration of the period specified in 37 CFR §§ 1.78(a)(2)(ii) and 1.78(a)(5)(ii). In addition, the petition under 37 CFR §§ 1.78(a)(3) and 1.78(a)(6) must be accompanied by:

(1) the reference required by 35 U.S.C. §§ 120 and 119(e) and 37 CFR §§ 1.78(a)(2)(i) and 1.78(a)(5)(i) of the prior-filed application, unless previously submitted;
(2) the surcharge set forth in § 1.17(t); and
(3) a statement that the entire delay between the date the claim was due under 37 CFR §§ 1.78(a)(2)(ii) and 1.78(a)(5)(ii) and the date the claim was filed was unintentional. The Commissioner may require additional information where there is a question whether the delay was unintentional.

The instant nonprovisional application was filed after November 29, 2000, and the claim herein for the benefit of priority to the prior-filed applications is submitted after expiration of the period specified in 37 CFR §§ 1.78(a)(2)(ii) and 1.78(a)(5)(ii). Therefore, this is a proper petition under 37 CFR §§ 1.78(a)(3) and 1.78(a)(6).

The petition complies with the requirements for a grantable petition under 37 CFR §§1.78(a)(3) and 1.78(a)(6) in that (1) a reference to the above-noted, prior-filed applications has been included in an amendment to the first sentence of the specification following the title as provided by 37 CFR §§ 1.78(a)(2)(iii) and 1.78(a)(5)(iii); (2) the surcharge fee required by 37 CFR 1.17(t) has been submitted; and (3) the petition contains a proper statement of unintentional delay. Accordingly, having found that the instant petition for acceptance of an unintentionally delayed claim for the benefit of priority under 35 U.S.C. §§ 120 and 119(e) to the above-noted, prior-filed nonprovisional applications satisfies the conditions of 37 CFR §§ 1.78(a)(3) and 1.78(a)(6), the petition is granted.

The granting of the petition to accept the delayed benefit claim to the prior-filed applications under 37 CFR §§ 1.78(a)(3) and 1.78(a)(6) should not be construed as meaning that the instant application is entitled to the benefit of the filing date of the prior-filed applications. In order for the instant application to be entitled to the benefit of the prior-filed applications, all other requirements under 35 U.S.C. § 120 and 37 CFR 1.78(a)(1) and (a)(2) and under 35 U.S.C. §119(e) and 37 CFR 1.78(a)(4) and (a)(5) must be met. Similarly, the fact that the corrected Filing Receipt accompanying this decision on petition includes the prior-filed applications should not be construed as meaning that applicant is entitled to the claim for benefit of priority to the prior-filed applications noted thereon. Accordingly, the examiner will, in due course, consider this benefit claim and determine whether the instant application is entitled to the benefit of the earlier filing date.

A corrected Filing Receipt, which includes the priority claim to the prior-filed applications, accompanies this decision on petition.

Any inquiries concerning this decision may be directed to the Petitions Attorney Edward Tannouse at (571) 272-3228. All other inquiries concerning either the examination procedures or status of the application should be directed to the Technology Center.

This application is being forwarded to Technology Center Art Unit 3763 for appropriate action on the amendment filed May 10, 2005, including consideration by the examiner of the claim under 35 U.S.C. § 120 and 37 CFR 1.78(a)(2) for the benefit of the prior-filed non-provisional application, and for consideration of the claim under 35 U.S.C. §119(e) and 37 CFR 1.78(a)(5) for the benefit of the prior-filed provisional application.

Francis Hicks
Petitions Examiner
Office of Petitions
United States Patent and Trademark Office

ATTACHMENT: Corrected Filing Receipt

#16

UNITED STATES PATENT AND TRADEMARK OFFICE

Commissioner for Patents
United States Patent and Trademark Office
P.O. Box 1450
Alexandria, VA 22313-1450
www.uspto.gov

HARNESS DICKEY PIERCE, P.L.C.
P.O. BOX 8910
RESTON, VA 20195

COPY MAILED

NOV 05 2004

OFFICE OF PETITIONS

In re Application of :
Koichi Miyachi et al :
Application No. 10/156,632 : ON PETITION
Filed: May 28, 2002 :
Attorney Docket No. 70904/57670

This is a decision on the petition, filed November 4, 2004, under 37 CFR 1.313(c)(2) to withdraw the above-identified application from issue after payment of the issue fee.

The petition is **GRANTED**.

The above-identified application is withdrawn from issue for consideration of a submission under 37 CFR 1.114 (request for continued examination). See 37 CFR 1.313(c)(2).

Petitioner is advised that the issue fee paid on October 19, 2004 in the above-identified application cannot be refunded. If, however, the above-identified application is again allowed, petitioner may request that it be applied towards the issue fee required by the new Notice of Allowance.[1]

Telephone inquiries should be directed to Irvin Dingle at (571) 272-3210.

This matter will be forwarded to Technology Center AU 2674 for processing of the request for continued examination under 37 CFR 1.114 and for consideration of the concurrently filed Information Disclosure Statement.

Irvin Dingle
Petitions Examiner
Office of Petitions
Office of the Deputy Commissioner
for Patent Examination Policy

---

[1] The request to apply the issue fee to the new Notice may be satisfied by completing and returning the new Issue Fee Transmittal Form PTOL-85(b), which includes the following language thereon: Commissioner for Patents is requested to apply the Issue Fee and Publication Fee (if any) or re-apply any previously paid issue fee to the application identified above. Petitioner is advised that, whether a fee is indicated as being due or not, the Issue Fee Transmittal Form must be completed and timely submitted to avoid abandonment. Note the language in bold text on the first page of the Notice of Allowance and Fee(s) Due (PTOL-85).

UNITED STATES PATENT AND TRADEMARK OFFICE

Commissioner for Patents
United States Patent and Trademark Office
P.O. Box 1450
Alexandria, VA 22313-1450
www.uspto.gov

JUN 20 2006

CROWELL & MORING LLP
INTELLECTUAL PROPERTY GROUP
P.O. BOX 14300
WASHINGTON DC 20044-4300

In re Application of	:
Rebecca Lister et al	:
Serial No.: 10/156,637	: SUSPENSION OF ACTION
Filed: May 29, 2002	:
Attorney Docket No.: 080395.55700	:

This is in reply to the petition under 37 CFR 1.103 to suspend action on this application at applicant's request for a period of six months, filed May 4, 2006.

A review of the file history shows that applicants submitted RCE papers on March 28, 2006, including a new set of claims and brief remarks. No request for suspension of action was filed at that time.

§ 1.103 Suspension of action by the Office.

(a) Suspension for cause . On request of the applicant, the Office may grant a suspension of action by the Office under this paragraph for good and sufficient cause. The Office will not suspend action if a reply by applicant to an Office action is outstanding. Any petition for suspension of action under this paragraph must specify a period of suspension not exceeding six months. Any petition for suspension of action under this paragraph must also include:
(1) A showing of good and sufficient cause for suspension of action; and
(2) The fee set forth in § 1.17(g), unless such cause is the fault of the Office.

Applicants' petition requests suspension of action in order to address a prior art rejection through laboratory testing demonstrating superior results. Applicants provide no detail as to what testing is being done or any expected completion date. No reason is given as to why such testing could not have been done or completed earlier. Further, applicants' reply accompanying the RCE submission states that in view of the new set of claims the application is, in applicants' opinion, in condition for allowance. This is contradictory to a need to provide a showing of unexpected or superior results in order to obtain allowance of the applciation. In summary, applicants have not shown any good or sufficient reason or cause for suspension of action.

In view of the above reason the petition is **DENIED**.

The application will be forwarded to the examiner for further consideration.

Should there be any questions with respect to this action, please contact William R. Dixon, Jr., by mail addressed to: Director, Technology Center 1600, P. O. BOX 1450, ALEXANDRIA, VA 22313-1450, or by telephone at 571-272-0519 or by facsimile transmission at the Office general facsimile number, 571-273-8300.

Bruce M. Kisliuk
Director, Technology Center 1600

UNITED STATES PATENT AND TRADEMARK OFFICE

Commissioner for Patents
United States Patent and Trademark Office
P.O. Box 1450
Alexandria, VA 22313-1450
www.uspto.gov

KNOBBE MARTENS OLSON & BEAR LLP
2040 MAIN STREET
FOURTEENTH FLOOR
IRVINE, CA 92614

COPY MAILED

MAR 0 9 2006

OFFICE OF PETITIONS

In re Application of	:
Federico C.A. Gaeta et al	:
Application No. 10/156,650	: DECISION GRANTING PETITION
Filed: May 24, 2002	: UNDER 37 CFR 1.313(c)(2)
Attorney Docket No. AVANIR.093A	:

This is a decision on the petition, filed February 28, 2006, under 37 CFR 1.313(c)(2) to withdraw the above-identified application from issue after payment of the issue fee.

The petition is **GRANTED**.

The above-identified application is withdrawn from issue for consideration of a submission under 37 CFR 1.114 (request for continued examination). See 37 CFR 1.313(c)(2).

Petitioner is advised that the issue fee paid on July 1, 2005 in the above-identified application cannot be refunded. If, however, the above-identified application is again allowed, petitioner may request that it be applied towards the issue fee required by the new Notice of Allowance.[1]

Telephone inquiries should be directed to the undersigned at (571) 272-3218.

This matter is being referred to Technology Center AU 1624 for processing of the request for continued examination under 37 CFR 1.114 and for consideration of the Information Disclosure Statement filed by certificate of mailing on October 13, 2005 and received in the USPTO on October 25, 2005.

Frances Hicks
Petitions Examiner
Office of Petitions

C:\Documents and Settings\FHicks\My Documents\470\Mar9\156630.wpd

---

[1] *The request to apply the issue fee to the new Notice may be satisfied by completing and returning the new Part B – Fee(s) Transmittal Form (along with any balance due at the time of submission), which includes the following language thereon: "The Director of the USPTO is requested to apply the Issue Fee and Publication Fee (if any) or to re-apply any previously paid issue fee in the application identified above. Petitioner is advised that, whether a fee is indicated as being due or not, the Issue Fee Transmittal Form* ***must*** *be completed and timely submitted to avoid abandonment. Note the language in bold text on the first page of the Notice of Allowance and Fee(s) Due (PTOL-85).*

UNITED STATES PATENT AND TRADEMARK OFFICE

Commissioner for Patents
United States Patent and Trademark Office
P.O. Box 1450
Alexandria, VA 22313-1450
www.uspto.gov

Lynn Linkowski
Verenium Corporation
Intellectual Property Department

SEP 23 2008

In re Patent No. 7,078,035 Jay M. Short et al
Issue Date: July 18, 2006
Appl No.: 10/156,660
Filed: May 24, 2002
For: Correction of Inventorship

DECISION GRANTING PETITION
37 CFR 1.324

This is a decision on the petition filed August 19, 2008 , to correct inventorship under 37 CFR 1.324. The petition has complied with all the requirements under 37 CFR 1.324.

The petition is **GRANTED**.

The patented file is being forwarded to Certificate of Corrections Branch for issuance of a certificate naming only the actual inventor or inventors.

/Nashaat T. Nashed/

Nashaat T. Nashed, Ph. D.
Supervisory Patent Examiner
Art Unit 1652
Technology Center 1600

UNITED STATES PATENT AND TRADEMARK OFFICE

Commissioner for Patents
United States Patent and Trademark Office
P.O. Box 1450
Alexandria, VA 22313-1450
www.uspto.gov

SEP 2 3 2008

DATE: Septembre 14, 2008
TO: Certificates of Correction Branch
FROM: Nashaat T. Nashed
Supervisory Patent Examiner
Art Unit 1652, Technology Center 1600
SUBJECT: REQUEST FOR CERTIFICATE OF CORRECTION

Please issue a Certificate of Correction in U. S. Letters Patent No. US 7,078,035 as specified on the attached Certificate.

/Nashaat T. Nashed/

Nashaat T. Nashed, Ph. D.
Supervisory Patent Examiner
Art Unit 1652
Technology Center 1600

UNITED STATES PATENT AND TRADEMARK OFFICE

CERTIFICATE

Patent No. US 7,078,035
Patented: July 18, 2006

On petition requesting issuance of a certificate for correction of inventorship pursuant to 35 U.S.C. 256, it has been found that the above identified patent, through error and without deceptive intent, improperly sets forth the inventorship. Accordingly, it is hereby certified that the correct inventorship of this patent is:

Jay M. Short, Kevin A. Gray, Nelson Robert Barton, James B. Garrett, Eileen O'Donoghue, and Dan E. Robertson.

/Nashaat T. Nashed/

Nashaat T. Nashed, Ph. D.
Supervisory Patent Examiner
Art Unit 1652
Technology Center 1600

UNITED STATES PATENT AND TRADEMARK OFFICE

Commissioner for Patents
United States Patent and Trademark Office
P.O. Box 1450
Alexandria, VA 22313-1450
www.uspto.gov

CARLSON, GASKEY & OLDS, P.C.
400 WEST MAPLE ROAD
SUITE 350
BIRMINGHAM MI 48009

COPY MAILED

OCT 30 2009

OFFICE OF PETITIONS

In re Application of	:	
Alfred Heimann	:	
Application No. 10/156676	:	
Filing or 371(c) Date: 05/28/2002	:	ON PETITION
Patent Number: 6,666,061	:	
Issue Date: 12/23/2003	:	
Attorney Docket Number: 60,475-047	:	

This is a decision on the "Petition Under 37 C.F.R. 1.182," filed April 16, 2007.

The petition is **GRANTED**.

The Office of Data Management is directed to issue a duplicate Letters Patent.

The petition fee, $400.00, has been charged to Petitioner's deposit account as authorized in the petition.

Questions concerning this decision may be directed to the undersigned at 571-232-3232. Inquiries regarding the issuance of a duplicate Letters Patent may be directed to Niomi Farmer, in the Office of Data Management at (703) 308-9250, Ext. 119.

A copy of this decision is being faxed to the Office of Data Management for issuance of a duplicate Letters Patent.

/Derek L. Woods/
Derek L. Woods
Attorney
Office of Petitions

CC: Niomi Farmer
South Tower 8th floor, Room C-32 (FAX 571-270-9937)

UNITED STATES PATENT AND TRADEMARK OFFICE

COMMISSIONER FOR PATENTS
UNITED STATES PATENT AND TRADEMARK OFFICE
P.O. BOX 1450
ALEXANDRIA, VA 22313-1450
www.uspto.gov

Thomas J. Perkowski, Esq., P.C.
Soundview Plaza
1266 East Main Street
Stamford CT 06902

COPY MAILED

FEB 0 2 2006

OFFICE OF PETITIONS

In re Application of	:	
Tsikos et al.	:	DECISION ON PETITION
Application No. 10/156,683	:	UNDER 37 CFR 1.137(b)
Filed: May 24, 2002	:	
Attorney Docket No. 108-127USANGO	:	

This is a decision on the petition under 37 CFR 1.137(b), filed November 4, 2005, to revive the above-identified application.

The petition is **granted**.

This application became abandoned for failure to reply in a proper and timely manner to the Notice of Drawing Inconsistency with Specification, mailed July 22, 2005. The Notice required petitioner to correct the inconsistency within a time period of one month or thirty (30) days, whichever was longer, from the mailing date of the Notice, or within the time remaining in the period set forth in the Notice of Allowability (Form PTOL-37) to file corrected drawings, whichever was longer. No extensions of time were permitted to file a reply. Accordingly, this application became abandoned on August 23, 2005. A Notice of Abandonment was mailed on October 7, 2005.

This matter is being referred to Technology Center Art Unit 2876 for review of the amendment under 37 CFR 1.312, submitted on November 4, 2005.

Telephone inquiries specific to this decision should be directed to the undersigned at (571) 272-3211.

Christina Tartera Donnell

Christina Tartera Donnell
Senior Petitions Attorney
Office of Petitions

SPE RESPONSE FOR CERTIFICATE OF CORRECTION

Paper No.: _____

DATE : _____

TO SPE OF : ART UNIT_____

SUBJECT : Request for Certificate of Correction on Patent No.: 6837313

A response is requested with respect to the accompanying request for a certificate of correction.

Please complete this form and return with file, within **7** days to:
Certificates of Correction Branch - PK 3-910
Palm location **7590** - Tel. No. 305-8201

With respect to the change(s) requested, correcting Office and/or Applicant's errors, should the patent read as shown in the certificate of correction? No new matter should be introduced, nor should the scope or meaning of the claims be changed.

Thank You For Your Assistance

_____
Certificates of Correction Branch

The request for issuing the above-identified correction(s) is hereby:
Note your decision on the appropriate box.

- ☒ **Approved** — **All** changes apply.
- ☐ **Approved in Part** — Specify below which changes **do not** apply.
- ☐ **Denied** — State the reasons for denial below.

Comments:

_____

_____

_____

DAVID BAGNELL
SUPERVISORY PATENT EXAMINER
TECHNOLOGY CENTER 3600

SPE

3672
Art Unit

UNITED STATES PATENT AND TRADEMARK OFFICE

COMMISSIONER FOR PATENTS
UNITED STATES PATENT AND TRADEMARK OFFICE
P.O. BOX 1450
ALEXANDRIA, VA 22313-1450
www.uspto.gov

MAIL

JUL 01 2005

DIRECTOR OFFICE
TECHNOLOGY CENTER 2600

In re Application of
Mark Amacher
Application No. 10/156,741
Filed: June 28, 2002
For: **MOISTURE DETECTION AND LOCATION SYSTEM**

DECISION ON REQUEST TO WITHDRAW FROM RECORD

This is a decision on the Request for Withdrawal as attorney or agent and change of address filed on April 14, 2005.

A grantable request to withdraw, as attorney/agent of record must:
(1) Indicate the present mailing address of the attorney(s)/agent(s) who seek(s) to withdraw, and
(2) Be signed by each attorney/agent seeking to withdraw or clearly be signed on their behalf, and
(3) Be *approved* at least thirty (30) days prior to the maximum extendable period for response to any outstanding Office Action, and
(4) Indicate the address to which future correspondence should be mailed.

Petitioner has met all of the above. Accordingly, the request is **GRANTED**.

All attorneys/agents of record in the request are withdrawn.

All future communications from the Office will be directed to the address listed below until otherwise notified by applicant. Applicant is reminded of the obligation to promptly notify the Patent and Trademark Office of any change in correspondence address to ensure receipt of all communications from the Office.

Ken A. Wieder
Special Program Examiner
Technology Center 2600
Communications
(571) 272-2986

CC:

DORITY & MANNING, P.A.
POST OFFICE BOX 1449
GREENVILLE SC 29602-1449

UNITED STATES PATENT AND TRADEMARK OFFICE

Commissioner for Patents
United States Patent and Trademark Office
P.O. Box 1450
Alexandria, VA 22313-1450
www.uspto.gov

WARE FRESSOLA VAN DER SLUYS & ADOLPHSON, LLP
BRADFORD GREEN, BUILDING 5
755 MAIN STREET, P.O. BOX 224
MONROE, CT 06468

COPY MAILED

OCT 12 2007

OFFICE OF PETITIONS

In re Application of	:	
Antti Toskala et al	:	
Application No. 10/156,751	:	ON PETITION
Filed: May 24, 2002	:	
Attorney Docket No. 944-3.140	:	

This is a decision on the petition under the unintentional provisions of 37 CFR 1.137(b), filed June 22, 2007, to revive the above-identified application.

The petition is **GRANTED**.

The application became abandoned for failure to timely file a reply within the meaning of 37 CFR 1.113 to the final Office action of November 30, 2005. The proposed reply required for consideration of a petition to revive must be a Notice of Appeal (and appeal fee required by 37 CFR 41.20(b)(2), an amendment that *prima facie* places the application in condition for allowance, a Request for Continued Examination and submission (37 CFR 1.114), or the filing of a continuing application under 37 CFR 1.53(b). See MPEP 711.03(c)(III)(A)(2). No extensions of time pursuant to the provisions of 37 CFR 1.136(a) were obtained. Accordingly, the date of abandonment of this application is March 1, 2006.

The petition satisfies the requirements of 37 CFR 1.137(b) in that petitioner has supplied (1) the reply in the form of a Request for Continued Examination (RCE) and fee of $790 and the submission required by 37 CFR 1.114; (2) the petition fee of $1500; and (3) a proper statement of unintentional delay.

There is no indication that the person signing the instant petition was ever given a power of attorney or authorization of agent to prosecute the above-identified application. If the person signing the instant petition desires to receive future correspondence regarding this application, the appropriate power of attorney or authorization of agent must be submitted. While a courtesy copy of this decision is being mailed to the person signing the instant petition, all future correspondence will be directed to the address currently of record until such time as appropriate instructions are received to the contrary.

Telephone inquiries concerning this decision should be directed to the undersigned at (571) 272-3210.

This application is being referred to Technology Center AU 2616 for processing of the RCE and for appropriate action by the Examiner in the normal course of business on the amendment submitted in accordance with 37 CFR 1.114.

Irvin Dingle
Petition Examiner
Office of Petitions

SPE RESPONSE FOR CERTIFICATE OF CORRECTION

Paper No.: _____

DATE : November 14, 2006

TO SPE OF : ART UNIT 1745

SUBJECT : Request for Certificate of Correction for Appl. No.: 10/156755 Patent No.: 6,936,367 B2

Please respond to this request for a certificate of correction within 7 days.

Please review the requested changes/corrections as shown in the **COCIN** document(s) in the IFW application image. No new matter should be introduced, nor should the scope or meaning of the claims be changed.

Please complete the response (see below) and forward the completed response to scanning using document code **COCX**.

Elisha Evans
Certificates of Correction Branch

703-308-9390 ext. 110

Thank You For Your Assistance

The request for issuing the above-identified correction(s) is hereby:
Note your decision on the appropriate box.

- ☒ **Approved** — **All** changes apply.
- ☐ **Approved in Part** — Specify below which changes **do not** apply.
- ☐ **Denied** — State the reasons for denial below.

Comments: ALL CHANGES ARE EDITORIAL IN NATURE

SPE

1745
Art Unit

UNITED STATES PATENT AND TRADEMARK OFFICE

COMMISSIONER FOR PATENTS
UNITED STATES PATENT AND TRADEMARK OFFICE
P.O. BOX 1450
ALEXANDRIA, VA 22313-1450
www.uspto.gov

MILLEN, WHITE, ZELANO & BRANIGAN, P.C.
2200 CLARENDON BLVD.
SUITE 1400
ARLINGTON, VA 22201

COPY MAILED
SEP 2 2 2005
OFFICE OF PETITIONS

In re Application of	:	
Thomas Brumby, et al.	:	
Application No. 10/156,759	:	ON PETITION
Filed: November 7, 2002	:	
Attorney Docket No.: SCH-1900	:	
	:	

This is a decision on the petition, filed September 20, 2005, under 37 CFR 1.313(c)(2) to withdraw the above-identified application from issue after payment of the issue fee.

The petition is **GRANTED**.

The above-identified application is withdrawn from issue for consideration of a submission under 37 CFR 1.114 (request for continued examination). See 37 CFR 1.313(c)(2).

Petitioner is advised that the issue fee paid on August 3, 2005, in the above-identified application, cannot be refunded. If, however, the above-identified application is again allowed, petitioner may request that it be applied towards the issue fee required by the new Notice of Allowance.[1]

Telephone inquiries relating to this decision should be directed to the undersigned at (571) 272-3204.

The application is being referred to Technology Center AU 1626 for further processing of the request for continued examination under 37 CFR 1.114.

Sherry D. Brinkley
Petitions Examiner
Office of Petitions

[1]The request to apply the issue fee to the new Notice may be satisfied by completing and returning the new Issue Fee Transmittal Form PTOL-85(b), which includes the following language thereon: "Commissioner for Patents is requested to apply the Issue Fee and Publication Fee (if any) or re-apply any previously paid issue fee to the application identified above." Petitioner is advised that, whether a fee is indicated as being due or not, the Issue Fee Transmittal Form **must** be completed and timely submitted to avoid abandonment. Note the language in bold text on the first page of the Notice of Allowance and Fee(s) Due (PTOL-85).

SPE RESPONSE FOR CERTIFICATE OF CORRECTION

Paper No.: _____

DATE : 3/27/08

TO SPE OF : ART UNIT 1626

SUBJECT : Request for Certificate of Correction on Patent No.: 7235561

A response is requested with respect to the accompanying request for a certificate of correction.

Please complete this form and return with file, within 7 days to:
Palm location **7580, Certificates of Correction Branch – South Tower – 9A22**
If response is for an IFW, **return to employee (named below) via PUBSCofC Team in MADRAS.**
With respect to the change(s) requested, correcting Office and/or Applicant's errors, should the patent read as shown in the certificate of correction (COCIN)? No new matter should be introduced, nor should the scope or meaning of the claims be changed.

Valerie Jackson

Thank You For Your Assistance

Certificates of Correction Branch
Tel. No. 703-308-9390 ext. 114

The request for issuing the above-identified correction(s) is hereby:
Note your decision on the appropriate box.

- ☑ **Approved** — All changes apply.
- ☐ **Approved in Part** — Specify below which changes do not apply.
- ☐ **Denied** — State the reasons for denial below.

Comments:

Column 362, line 51, read "$-(CH_2)_n-R^3$", should read --$-CH(C_3H_7)-(CH_2)_n-R^5$,--

JOSEPH K. McKANE
SUPERVISORY PATENT EXAMINER
TECHNOLOGY CENTER 1600

SPE

4/1/08
Art Unit

SPE: P. Ryan

SPE RESPONSE FOR CERTIFICATE OF CORRECTION

Paper No.: _____

DATE : 9/15/06

TO SPE OF : ART UNIT 1745

SUBJECT : Request for Certificate of Correction for Appl. No.: 10/156,796 Patent No.: 7018739

Please respond to this request for a certificate of correction within 7 days.

Please review the requested changes/corrections as shown in the **COCIN** document(s) in the IFW application image. No new matter should be introduced, nor should the scope or meaning of the claims be changed.

Please complete the response (see below) and forward the completed response to scanning using document code **COCX**.

Lamonte M. Newsome
Certificates of Correction Branch
703-308-9390 ext. 112

Thank You For Your Assistance

The request for issuing the above-identified correction(s) is hereby:
Note your decision on the appropriate box.

- ☒ **Approved** — All changes apply.
- ☐ **Approved in Part** — Specify below which changes **do not** apply.
- ☐ **Denied** — State the reasons for denial below.

Comments: Please replace abstract. LSW

[signature] 1745
SPE **Art Unit**

UNITED STATES PATENT AND TRADEMARK OFFICE

UNDER SECRETARY OF COMMERCE FOR INTELLECTUAL PROPERTY AND
DIRECTOR OF THE UNITED STATES PATENT AND TRADEMARK OFFICE
WASHINGTON, DC 20231
www.uspto.gov

UR
Paper NO. 4

Mailed SEP - 9 2002

In re Application of	:	
Glen Carey et al.	:	
Serial Number: 10/156,849	:	DECISION ON
Filed: May 29, 2002	:	PETITION UNDER
For: FLUID HANDLING APPARATUS FOR AN	:	
AUTOMATED APPARATUS	:	M.P.E.P. 708.02, II

This is a decision on the Petition to Make Special because of Actual Infringement (37 C.F.R. 1.102 and MPEP 708.02) filed May 29, 2002, along with the requisite fee (paid), in the above-noted application. The petition with accompanying statement, meet the requirements of Section 708.02 (II) of the MPEP.

If the examiner finds any interfering application for the same subject matter, the examiner should consider such application simultaneously with this case and should state in the official letter of such application that the examiner is taking it out of its turn because of a possible interference.

Should an appeal be taken in this case or should this case become involved in an interference, consideration of the appeal and the interference will be expedited by Patent and Trademark Office Officials concerned, contingent likewise upon diligent prosecution by applicant.

After allowance, this case will be given priority for printing. See MPEP 1309.

The petition is GRANTED.

Richard V. Fisher

Richard V. Fisher, Director
Technology Center 1700
Chemical and Materials Engineering

WEINGARTEN, SCHURGIN, GAGNEBIN & LEBOVICI LLP
TEN POST OFFICE SQUARE
BOSTON, MA 02109

UNITED STATES
PATENT AND
TRADEMARK OFFICE

Under Secretary of Commerce for Intellectual Property and
Director of the United States Patent and Trademark Office
Washington, DC 20231
www.USPTO.gov

Mailed: MAY 21 2003

spg
Paper Number 10

In re application of
Glen Carey et al.
Serial No. 10/156,849
Filed: May 29, 2002
For: FLUID HANDLING APPARATUS FOR AN AUTOMATED ANALYZER

DECISION ON PETITION

This is a response to the PETITION UNDERR 37 C.F.R. § 1.181(a) TO WITHDRAW HOLDING OF ABANDONMENT AND TO ENTER PREVIOUSLY SUBMITTED RESPONSE, filed April 21, 2003. The petition requests that any abandonment for failure to timely file a proper reply to the Office letter mailed on October 7, 2002 be withdrawn since the applicants did timely file a response on March 31, 2003 by facsimile transmission. (A copy of the papers filed March 31, 2002 are attached to the instant petition.)

DECISION

The instant response has been accepted as a petition to withdraw the holding of abandonment under the provisions of 37 CFR 1.181 (no fee) - no abandonment-in-fact. A review of the evidence presented reveals that applicant's response was properly filed on March 31, 2003 by facsimile transmission as evidenced by the properly completed Certification of Facsimile Transmission attached as a portion of applicants response and by the copy of the "Auto Reply Facsimile Transmission" provided with the instant petition which indicates the successful transmission, to a USPTO facsimile telephone number (703-872-9310), of nineteen pages. Therefore, the application was never in-fact abandoned and any holding of abandonment for failure to timely file a proper response to the Office letter mailed on October 7, 2002 is hereby vacated, and the application is returned to pending status.

The application shall be forwarded to the examiner for processing and consideration of the papers originally filed March 31, 2003 by facsimile transmission and copy of which is provided as an attachment to the instant petition.

The Petition is **GRANTED**.

Jacqueline Stone, Director
Technology Center 1700
Chemical and Materials Engineering

WEINGARTEN, SCHURGIN, GAGNEBIN & LEBOVICI LLP
TEN POST OFFICE SQUARE
BOSTON MA 02109

UNITED STATES PATENT AND TRADEMARK OFFICE

Commissioner for Patents
United States Patent and Trademark Office
P.O. Box 1450
Alexandria, VA 22313-1450
www.uspto.gov

PHILIP S. JOHNSON
JOHNSON & JOHNSON
ONE JOHNSON & JOHNSON PLAZA
NEW BRUNSWICK, NJ 08933-7003

COPY MAILED

OCT 13 2005

OFFICE OF PETITIONS

In re Application of	:	
Abdel-Magid et al.	:	DECISIONS ON PETITIONS UNDER
Application No. 10/156,882	:	37 CFR 1.78(a)(3) AND 1.78(a)(6)
Filed: May 29, 2002	:	
Attorney Docket No. MCN-612	:	

This is a decision on the petitions under 37 CFR 1.78(a)(3) and 1.78(a)(6), filed April 25, 2005, to accept an unintentionally delayed claim under 35 U.S.C. §§ 120 and 119(e) for the benefit of the prior-filed nonprovisional Application No. 08/881,971, filed June 25, 1997, and the prior-filed provisional Application No. 60/021,455, filed July 17, 1996, set forth in the concurrently filed amendment.

The petitions are **granted**.

A petition for acceptance of a claim for late priority under 37 CFR 1.78(a)(3) and 1.78(a)(6) is only applicable to those applications filed on or after November 29, 2000. Further, the petition is appropriate only after the expiration of the period specified in 37 CFR 1.78(a)(2)(ii) and 1.78(a)(5)(ii). In addition, the petition under 37 CFR 1.78(a)(3) and 1.78(a)(6) must be accompanied by:

(1) the reference required by 35 U.S.C. §§ 120 and 119(e) and 37 CFR 1.78(a)(2)(i) and 1.78(a)(5)(i) of the prior-filed application, unless previously submitted;
(2) the surcharge set forth in § 1.17(t); and
(3) a statement that the entire delay between the date the claim was due under 37 CFR 1.78(a)(2)(ii) and 1.78(a)(5)(ii) and the date the claim was filed was unintentional. The Director may require additional where there is a question whether the delay was unintentional.

The instant pending nonprovisional application was filed after November 29, 2000, and the claim herein for the benefit of priority to the prior-filed applications is submitted after expiration of the period specified in 37 CFR 1.78(a)(2)(ii) and 1.78(a)(5)(ii). Therefore, this is a proper petition under 37 CFR 1.78(a)(3) and 1.78(a)(6).

The petition complies with the requirements for a grantable petition under 37 CFR 1.78(a)(3) and 1.78(a)(6) in that (1) a reference to the above-noted, prior-filed applications has been included in an amendment to the first sentence of the specification following the title, as provided by 37 CFR 1.78(a)(2)(iii) and 1.78(a)(5)(iii); (2) the surcharge fee required by 37 CFR 1.17(t) has been submitted; and (3) the petition contains an adequate statement of unintentional delay.[1] Accordingly, having found that the instant petition for acceptance of an unintentionally delayed claim for the benefit of priority under 35 U.S.C. §§ 120 and 119(e) to the above-noted, prior-filed applications satisfies the conditions of 37 CFR 1.78(a)(3) and 1.78(a)(6), the petition is granted.

The granting of the petition to accept the delayed benefit claim to the prior-filed applications under 37 CFR 1.78(a)(3) and 1.78(a)(6) should <u>not</u> be construed as meaning that the instant application is entitled to the benefit of the filing date of the prior-filed applications. In order for the instant application to be entitled to the benefit of the prior-filed applications, all other requirements under 35 U.S.C. § 120 and 1.78(a)(1) and (a)(2) and under 35 U.S.C. § 119(e) and 37 CFR 1.78(a)(4) and (a)(5) must be met. Similarly, the fact that the corrected Filing Receipt accompanying this decision on petition includes the prior-filed applications should <u>not</u> be construed as meaning that applicant is entitled to the claim for benefit of priority to the prior-filed applications noted thereon. Accordingly, the examiner will, in due course, consider this benefit claim and determine whether the instant application is entitled to the benefit of the earlier filing date.

A corrected Filing Receipt, which includes the priority claim to the prior-filed applications, accompanies this decision on petition.

Any questions concerning this matter may be directed to Senior Petitions Attorney Christina Tartera Donnell at (571) 272-3211. All other inquiries concerning either the examination procedures or status of the application should be directed to the Technology Center.

This matter is being referred to Technology Center Art Unit 1654 for appropriate action on the amendment filed April 25, 2005, including consideration by the examiner of the claim under 35 U.S.C. § 120 and 37 CFR 1.78(a)(2) for the benefit of the prior-filed nonprovisional Application No.

---

[1] 37 CFR 1.78(a)(3) and 1.78(a)(6) require a statement that the entire delay between the date the claim was due under 37 CFR 1.78(a)(2)(ii) and 1.78(a)(5)(ii) and the date the claim was filed was unintentional. Because the statement contained in the instant petition varies from the language required by 37 CFR 1.78(a)(3) and (a)(6), the statement contained in the instant petition is being construed as the statement required by 37 CFR 1.78(a)(3) and (a)(6).

08/881,971, and for consideration of the claim under 35 U.S.C. § 119(e) and 37 CFR 1.78(a)(5) for the benefit of the prior-filed provisional Application No. 60/021,455.

Frances Hicks
Lead Paralegal
Office of Petitions
Office of the Deputy Commissioner
for Patent Examination Policy

ATTACHMENT: Corrected Filing Receipt

UNITED STATES PATENT AND TRADEMARK OFFICE

Commissioner for Patents
United States Patent and Trademark Office
P.O. Box 1450
Alexandria, VA 22313-1450
www.uspto.gov

AGILENT TECHNOLOGIES, INC.
LEGAL DEPARTMENT, DL429
INTELLECTUAL PROPERTY ADMINISTRATION
P.O. BOX 7599
LOVELAND, CO 80537-0599

COPY MAILED

MAR 0 9 2005

OFFICE OF PETITIONS

COPY

In re Application of
David J. Dascher, et al.
Application No. 10/156,896
Filed: May 29, 2002
Attorney Docket No. 10010373-1

DECISION ON PETITION
UNDER 37 CFR 1.78(a)(3)

This is a decision on the petition under 37 CFR 1.78(a)(3), filed January 10, 2005, to accept an unintentionally delayed claim under 35 U.S.C. § 120 for the benefit of priority to the prior-filed nonprovisional applications set forth in the amendment filed concurrently with the instant petition.

The petition is **GRANTED.**

A petition for acceptance of a claim for late priority under 37 CFR 1.78(a)(3) is only applicable to those applications filed on or after November 29, 2000. Further, the petition is appropriate only after the expiration of the period specified in 37 CFR 1.78(a)(2)(ii). In addition, the petition under 37 CFR 1.78(a)(3) must be accompanied by:

(1) the reference required by 35 U.S.C. § 120 and 37 CFR 1.78(a)(2)(i) of the prior-filed application, unless previously submitted;

(2) the surcharge set forth in § 1.17(t); and

(3) a statement that the entire delay between the date the claim was due under 37 CFR 1.78(a)(2)(ii) and the date the claim was filed was unintentional. The Commissioner may require additional information where there is a question whether the delay was unintentional.

The instant nonprovisional application was filed after November 29, 2000, and the claim herein for the benefit of priority to the prior-filed nonprovisional applications is submitted after expiration of the period specified in 37 CFR 1.78(a)(2)(ii). Therefore, this is a proper petition under 37 CFR 1.78(a)(3).

37 CFR § 1.78(a)(3) requires a statement that the entire delay between the date the claim was due under 37 CFR § 1.78(a)(2)(ii) and the date the claim was filed was unintentional. Since the statement contained in the instant petition varies from the language required by 37 CFR 1.78(a)(3), the statement contained in the instant petition is being construed as the statement required by 37 CFR 1.78(a)(3).

The petition complies with the requirements for a grantable petition under 37 CFR 1.78(a)(3) in that (1) a reference to the above-noted, prior-filed nonprovisional applications has been included in an amendment to the first sentence of the specification following the title, as provided by 37 CFR 1.78(a)(2)(iii); (2) the surcharge fee required by 37 CFR 1.17(t) has been submitted; and (3) the petition contains an adequate statement of unintentional delay. Accordingly, having found that the instant petition for acceptance of an unintentionally delayed claim for the benefit of priority under 35 U.S.C. § 120 to the above-noted, prior-filed nonprovisional applications satisfies the conditions of 37 CFR 1.78(a)(3), the petition is granted.

The granting of the petition to accept the delayed benefit claim to the prior-filed application under 37 CFR 1.78(a)(3) should not be construed as meaning that the instant application is entitled to the benefit of the prior-filed application. In order for the instant application to be entitled to the benefit of the prior-filed application, all other requirements under 35 U.S.C. § 120 and 37 CFR 1.78(a)(1) and (a)(2) must be met. Similarly, the fact that the corrected Filing Receipt accompanying this decision on petition includes the prior-filed application should not be construed as meaning that applicant is entitled to the claim for benefit of priority to the prior-filed application noted thereon. Accordingly, the examiner will, in due course, consider this benefit claim and determine whether the instant application is entitled to the benefit of the earlier filing date.

A corrected Filing Receipt, which includes the priority claim to the above-noted, prior-filed nonprovisional application, accompanies this decision on petition.

There is no indication that the person signing the instant petition was ever given a power of attorney or authorization of agent to prosecute the above-identified application. If the person signing the instant petition desires to receive future correspondence regarding this application, the appropriate power of attorney or authorization of agent must be submitted. While a courtesy copy of this decision is being mailed to the person signing the instant petition, all future correspondence will be directed to the address currently of record until such time as appropriate instructions are received to the contrary.

Any questions concerning this decision on petition may be directed to Retta Williams at (571) 272-3229. All other inquiries concerning either the examination procedures or status of the application should be directed to the Technology Center.

This application is being forwarded to Technology Center Art Unit 2832 for appropriate action on the amendment filed September 10, 2004, including consideration by the examiner of applicant's entitlement to claim benefit of priority under 35 U.S.C. § 120 to the prior-filed nonprovisional application.

Frances Hicks

Frances Hicks
Petitions Examiner
Office of Petitions
Office of the Deputy Commissioner
for Patent Examination Policy

Attachment: Corrected Filing Receipt

cc: Glenn W. Brown
Thomas, Kayden, Horstemeyer & Risley, L.L.P.
Suite 1750
100 Galleria Parkway N.W.
Atlanta, GA 30339

UNITED STATES PATENT AND TRADEMARK OFFICE

Commissioner for Patents
United States Patent and Trademark Office
P.O. Box 1450
Alexandria, VA 22313-1450
www.uspto.gov

AGILENT TECHNOLOGIES, INC.
LEGAL DEPARTMENT, DL429
INTELLECTUAL PROPERTY ADMINISTRATION
P.O. BOX 7599
LOVELAND, CO 80537-0599

COPY MAILED

MAR 0 9 2005

OFFICE OF PETITIONS

In re Application of	:	
David J. Dascher, et al.	:	
Application No. 10/156,896	:	DECISION ON PETITION
Filed: May 29, 2002	:	UNDER 37 CFR 1.78(a)(3)
Attorney Docket No. 10010373-1	:	

This is a decision on the petition under 37 CFR 1.78(a)(3), filed January 10, 2005, to accept an unintentionally delayed claim under 35 U.S.C. § 120 for the benefit of priority to the prior-filed nonprovisional applications set forth in the amendment filed concurrently with the instant petition.

The petition is **GRANTED.**

A petition for acceptance of a claim for late priority under 37 CFR 1.78(a)(3) is only applicable to those applications filed on or after November 29, 2000. Further, the petition is appropriate only after the expiration of the period specified in 37 CFR 1.78(a)(2)(ii). In addition, the petition under 37 CFR 1.78(a)(3) must be accompanied by:

(1) the reference required by 35 U.S.C. § 120 and 37 CFR 1.78(a)(2)(i) of the prior-filed application, unless previously submitted;

(2) the surcharge set forth in § 1.17(t); and

(3) a statement that the entire delay between the date the claim was due under 37 CFR 1.78(a)(2)(ii) and the date the claim was filed was unintentional. The Commissioner may require additional information where there is a question whether the delay was unintentional.

The instant nonprovisional application was filed after November 29, 2000, and the claim herein for the benefit of priority to the prior-filed nonprovisional applications is submitted after expiration of the period specified in 37 CFR 1.78(a)(2)(ii). Therefore, this is a proper petition under 37 CFR 1.78(a)(3).

37 CFR § 1.78(a)(3) requires a statement that the entire delay between the date the claim was due under 37 CFR § 1.78(a)(2)(ii) and the date the claim was filed was unintentional. Since the statement contained in the instant petition varies from the language required by 37 CFR 1.78(a)(3), the statement contained in the instant petition is being construed as the statement required by 37 CFR 1.78(a)(3).

The petition complies with the requirements for a grantable petition under 37 CFR 1.78(a)(3) in that (1) a reference to the above-noted, prior-filed nonprovisional applications has been included in an amendment to the first sentence of the specification following the title, as provided by 37 CFR 1.78(a)(2)(iii); (2) the surcharge fee required by 37 CFR 1.17(t) has been submitted; and (3) the petition contains an adequate statement of unintentional delay. Accordingly, having found that the instant petition for acceptance of an unintentionally delayed claim for the benefit of priority under 35 U.S.C. § 120 to the above-noted, prior-filed nonprovisional applications satisfies the conditions of 37 CFR 1.78(a)(3), the petition is granted.

The granting of the petition to accept the delayed benefit claim to the prior-filed application under 37 CFR 1.78(a)(3) should not be construed as meaning that the instant application is entitled to the benefit of the prior-filed application. In order for the instant application to be entitled to the benefit of the prior-filed application, all other requirements under 35 U.S.C. § 120 and 37 CFR 1.78(a)(1) and (a)(2) must be met. Similarly, the fact that the corrected Filing Receipt accompanying this decision on petition includes the prior-filed application should not be construed as meaning that applicant is entitled to the claim for benefit of priority to the prior-filed application noted thereon. Accordingly, the examiner will, in due course, consider this benefit claim and determine whether the instant application is entitled to the benefit of the earlier filing date.

A corrected Filing Receipt, which includes the priority claim to the above-noted, prior-filed nonprovisional application, accompanies this decision on petition.

There is no indication that the person signing the instant petition was ever given a power of attorney or authorization of agent to prosecute the above-identified application. If the person signing the instant petition desires to receive future correspondence regarding this application, the appropriate power of attorney or authorization of agent must be submitted. While a courtesy copy of this decision is being mailed to the person signing the instant petition, all future correspondence will be directed to the address currently of record until such time as appropriate instructions are received to the contrary.

Any questions concerning this decision on petition may be directed to Retta Williams at (571) 272-3229. All other inquiries concerning either the examination procedures or status of the application should be directed to the Technology Center.

This application is being forwarded to Technology Center Art Unit 2832 for appropriate action on the amendment filed September 10, 2004, including consideration by the examiner of applicant's entitlement to claim benefit of priority under 35 U.S.C. § 120 to the prior-filed nonprovisional application.

Frances Hicks

Frances Hicks
Petitions Examiner
Office of Petitions
Office of the Deputy Commissioner
for Patent Examination Policy

Attachment: Corrected Filing Receipt

cc: Glenn W. Brown
Thomas, Kayden, Horstemeyer & Risley, L.L.P.
Suite 1750
100 Galleria Parkway N.W.
Atlanta, GA 30339

SPE RESPONSE FOR CERTIFICATE OF CORRECTION

Paper No.:20080702

DATE : July 02, 2008

TO SPE OF : ART UNIT

SUBJECT : Request for Certificate of Correction on Patent No.: 7,183,105

A response is requested with respect to the accompanying request for a certificate of correction.

Please complete this form and return with file, within **7** days to:
Certificates of Correction Branch - ST (South Tower) 9A22
Palm location **7590** - Tel. No. (703) 305-8309

With respect to the change(s) requested, correcting Office and/or Applicant's errors, should the patent read as shown in the certificate of correction? No new matter should be introduced, nor should the scope or meaning of the claims be changed.

Thank You For Your Assistance **Certificates of Correction Branch**

The request for issuing the above-identified correction(s) is hereby:

Note your decision on the appropriated box.

☒ **Approved** All changes apply.

☐ **Approved in Part** Specify below which changes **do not** apply.

☐ **Denied** State the reasons for denial below.

Comments:

All changes approved. The errors correct printer errors, and amend the claims back to the scope allowed.

SPE: /Joseph Woitach/ Art Unit 1633

Knobbe Martens Olson & Bear LLP

Intellectual Property Law

550 West C Street
Suite 1200
San Diego CA 92101
Tel 619-235-8550
Fax 619-235-0176
www.kmob.com

APPROVED: /RMK/ (07/02/2008)

Ryan E. Melnick, Ph.D.
619-525-8319
rmelnick@kmob.com

May 30, 2008

Commissioner for Patents
P.O. Box 1450
Alexandria, VA 22313-1450

Re: Title: EUBACTERIAL MINICELLS AND THEIR USE AS VECTORS FOR NUCLEIC ACID DELIVERY AND EXPRESSION
Letters Patent No. 7,183,105
Issued: February 27, 2007
Attorney Docket: VAX.008DV16

Dear Sir:

Enclosed for filing is a Certificate of Correction in connection with the above-identified patent.

As the errors cited in the Certificate of Correction were incurred through the fault of the Patent Office, no fee is believed to be required. However, please charge our Deposit Account No. 11-1410 for any fees that may be incurred with this request.

Respectfully submitted,

Knobbe, Martens, Olson & Bear, LLP

Ryan Melnick

Ryan E. Melnick
Registration No. 58,621
Customer No. 20,995

Enclosures

5451103
053008

APPROVED: /RMK/ (07/02/2008)

UNITED STATES PATENT AND TRADEMARK OFFICE
CERTIFICATE OF CORRECTION

APPROVED: /RMK/ (07/02/2008)

PATENT NO. : 7,183,105
APPLICATION NO. : 10/156,902
ISSUE DATE : February 27, 2007
INVENTOR(S) : Sabbadini, et al.

It is certified that error appears in the above-identified patent and that said Letters Patent is hereby corrected as shown below:

At column 571, lines 59-61, in claim 1, please delete "A fully intact minicell comprising a double stranded deoxyribose nucleic acid" and insert

-- A eubacterial minicell, comprising:
in intact membrane;
an intact cell wall; and
episomal deoxyribose nucleic acid --, therefore.

At column 573, lines 7-8, in claim 8, please delete "a double stranded" and insert -- episomal --, therefore.

At column 573, line 9, in claim 8, please delete "fully intact minicell" and insert -- eubacterial minicell that comprises an intact membrane and an intact cell wall --, therefore.

At column 573, line 11, in claim 8, please delete "double stranded" and insert -- episomal deoxyribose --, therefore.

At column 574, line 10, in claim 15, please delete "fully intact minicell" and insert -- eubacterial minicell that comprises an intact membrane and an intact cell wall --, therefore.

APPROVED: /RMK/ (07/02/2008)

MAILING ADDRESS OF SENDER:

Ryan E Melnick
KNOBBE, MARTENS, OLSON & BEAR, LLP
2040 Main Street, 14th Floor
Irvine, California 92614

DOCKET NO. VAX.008DV16

UNITED STATES PATENT AND TRADEMARK OFFICE
CERTIFICATE OF CORRECTION

PATENT NO. : 7,183,105 APPROVED: /RMK/ (07/02/2008)

APPLICATION NO. : 10/156,902

ISSUE DATE : February 27, 2007

INVENTOR(S) : Sabbadini, et al.

At column 574, lines 11-12, in claim 15, please delete "a double stranded" and insert -- an episomal deoxyribose --, therefore.

5450860
053008

APPROVED: /RMK/ (07/02/2008)

MAILING ADDRESS OF SENDER:

Ryan E Melnick
KNOBBE, MARTENS, OLSON & BEAR, LLP
2040 Main Street, 14th Floor
Irvine, California 92614

DOCKET NO. VAX.008DV16

SPE RESPONSE FOR CERTIFICATE OF CORRECTION

Paper No.:20080702

DATE : July 17, 2008

TO SPE OF : ART UNIT 1633

SUBJECT : Request for Certificate of Correction on Patent No.: 7,183,105

A response is requested with respect to the accompanying request for a certificate of correction.

Please complete this form and return with file, within **7** days to:
Certificates of Correction Branch - PK 3-910
Palm location **7590** - Tel. No. 305-8201

With respect to the change(s) requested, correcting Office and/or Applicant's errors, should the patent read as shown in the certificate of correction? No new matter should be introduced, nor should the scope or meaning of the claims be changed.

Thank You For Your Assistance **Certificates of Correction Branch**

The request for issuing the above-identified correction(s) is hereby:
Note your decision on the appropriate box.

☒ **Approved** **All** changes apply.

☐ **Approved in Part** Specify below which changes **do not** apply.

☐ **Denied** State the reasons for denial below.

Comments:

The amendments correct printer errors in the claims and change the claims back to the allowed claim language.

/Robert M. Kelly/ (7/2/08)

UNITED STATES PATENT AND TRADEMARK OFFICE

COMMISSIONER FOR PATENTS
UNITED STATES PATENT AND TRADEMARK OFFICE
WASHINGTON, D.C. 20231
www.uspto.gov

Paper No. 11

STEVEN F. WEINSTOCK
ABBOTT LABORATORIES
100 ABBOTT PARK ROAD
DEPT. 377/AP6A
ABBOTT PARK IL 60064-6008

COPY MAILED

FEB 2 0 2003

OFFICE OF PETITIONS

In re Application of MUKERJI et al. Application No. 10/156,911 Filed: May 29, 2002 Attorney Docket No. 6407.US.P4	: : : : : :	DECISION DISMISSING PETITION AS MOOT

This is a decision on the petition filed January 27, 2003, requesting that the above-identified application be accorded a filing date of May 29, 2002.

The petition is **dismissed as moot.**

The United States Patent and Trademark Office records indicate that the above-identified application has been accorded a filing date of May 29, 2002. Thus, the petition is moot.

The application file is being forwarded to Technology Center 1600.

Telephone inquiries specific to this matter should be directed to the undersigned at (703) 306-5589.

Christina Tartera Donnell

Christina Tartera Donnell
Senior Petitions Attorney
Office of Petitions

Enclosure: Corrected Filing Receipt

UNITED STATES PATENT AND TRADEMARK OFFICE

Commissioner for Patents
United States Patent and Trademark Office
P.O. Box 1450
Alexandria, VA 22313-1450
www.uspto.gov

Paper No. 11

BROWN & MICHAELS, PC
400 M & T BANK BUILDING
118 NORTH TIOGA ST
ITHACA, NY 14850

COPY MAILED

OCT 29 2004

OFFICE OF PETITIONS

In re Application of
John P. Kolarik
Application No. 10/156,915
Filed: May 29, 2002
Attorney Docket No. KOL-1DIV

: DECISION ON PETITION
: UNDER 37 CFR 1.78(a)(6)

This is a decision on the renewed petition under 37 CFR 1.78(a)(6), filed October 4, 2004, to accept an unintentionally delayed claim under 35 U.S.C. §119(e) for the benefit of the prior-filed provisional Application No. 60/029,944, filed November 7, 1996, and the amendment of which is embodied in the instant petition.[1]

The petition is **DISMISSED**.

A petition under 37 CFR 1.78(a)(6) is only applicable to those applications filed on or after November 29, 2000. Further, the petition is appropriate only after expiration of the period specified in 37 CFR 1.78(a)(5)(ii) and must be filed during the pendency of the nonprovisional application. In addition, the petition must be accompanied by:

(1) the reference required by 35 U.S.C. § 119(e) and 37 CFR 1.78(a)(5)(i) to the prior-filed application, unless previously submitted;
(2) the surcharge set forth in § 1.17(t); and
(3) a statement that the entire delay between the date the claim was due under 37 CFR 1.78(a)(5)(ii) and the date the claim was filed was unintentional. The Commissioner may require additional information where there is a question whether the delay was unintentional.

The instant pending nonprovisional application was filed on May 29, 2002 and was pending at the time of filing of the instant petition. A reference to the prior-filed provisional application has been included in an amendment to the first sentence of the specification following the title.

However, the amendment is not acceptable as drafted since it improperly incorporates by reference the prior-filed application. Petitioner's attention is directed to Dart Industries v. Banner, 636 F.2d 684, 207 USPQ 273 (C.A.D.C. 1980), where the court drew a distinction between a permissible 35 U.S.C. § 120 statement and the impermissible introduction of new matter by way of incorporation by reference in a 35 U.S.C. § 120 statement. The court specifically stated:

---

[1] Petitioner is advised that the amendment must be included in a separate paper, since different matters are handled by different branches of the Office. *Note* 37 CFR 1.4(c)) and 37 CFR 1.121.

> Section 120 merely provides a mechanism whereby an application becomes entitled to benefit of the filing date of an earlier application disclosing the same subject matter. Common subject matter must be disclosed, in both applications, either specifically or by an express incorporation-by-reference of prior disclosed subject matter. Nothing in section 120 itself operates to carry forward any disclosure from an earlier application. In re deSeversky, supra at 674, 177 USPQ at 146-147. Section 120 contains no magical disclosure-augmenting powers able to pierce new matter barriers. It cannot, therefore, "limit" the absolute and express prohibition against new matter contained in section 251.

In order for the incorporation by reference statement to be effective as a proper safeguard against the omission of a portion of a prior application, the incorporation by reference statement must be included in the specification-as-filed, or in an amendment specifically referred to in an oath or declaration executing the application. *See* In re deSeversky, *supra*. *Note also* MPEP 201.06(c).

Accordingly, before the petition under 37 CFR 1.78(a)(6) can be granted, a substitute amendment[2] deleting the incorporation by reference statement, along with a renewed petition under 37 CFR 1.78(a)(6), is required.

Further correspondence with respect to this matter should be addressed as follows:

By mail:	Mail Stop PETITION Commissioner for Patents Post Office Box 1450 Alexandria, VA 22313-1450
By hand:	Customer Window located at: U.S. Patent and Trademark Office 220 20th Street S Customer Window, Mail Stop Petitions Crystal Plaza Two Lobby, Room 1B03 Arlington, VA 22202
Central Fax:	(703) 872-9306 ATTN: Office of Petitions

Any questions concerning this matter may be directed to Wan Laymon at (703) 306-5685.

Frances Hicks

Frances Hicks
Lead Petitions Examiner
Office of Petitions
Office of the Deputy Commissioner
for Patent Examination Policy

---

[2] *Note* 37 CFR 1.121

UNITED STATES PATENT AND TRADEMARK OFFICE

Commissioner for Patents
United States Patent and Trademark Office
P.O. Box 1450
Alexandria, VA 22313-1450
www.uspto.gov

Paper No. 13

BROWN & MICHAELS, PC
400 M & T BANK BUILDING
118 NORTH TIOGA ST
ITHACA, NY 14850

COPY MAILED

DEC 09 2004

OFFICE OF PETITIONS

In re Application of
John P. Kolarik
Application No. 10/156,915
Filed: May 29, 2002
Attorney Docket No. KOL-1DIV

: DECISION ON PETITION
: UNDER 37 CFR 1.78(a)(6)

This is a decision on the renewed petition under 37 CFR 1.78(a)(6), filed November 9, 2004, to accept an unintentionally delayed claim under 35 U.S.C. §119(e) for the benefit of the prior-filed provisional Application No. 60/029,944, filed November 7, 1996, and the amendment of which is embodied in the instant petition.[1]

The petition is **GRANTED**.

A petition under 37 CFR 1.78(a)(6) is only applicable to those applications filed on or after November 29, 2000. Further, the petition is appropriate only after expiration of the period specified in 37 CFR 1.78(a)(5)(ii) and must be filed during the pendency of the nonprovisional application. In addition, the petition must be accompanied by:

(1) the reference required by 35 U.S.C. § 119(e) and 37 CFR 1.78(a)(5)(i) to the prior-filed application, unless previously submitted;
(2) the surcharge set forth in § 1.17(t); and
(3) a statement that the entire delay between the date the claim was due under 37 CFR 1.78(a)(5)(ii) and the date the claim was filed was unintentional. The Commissioner may require additional information where there is a question whether the delay was unintentional.

The instant nonprovisional application was filed on May 29, 2002 and was pending at the time of filing of the instant petition. A reference to the prior-filed provisional application has been

[1] Petitioner is advised that the amendment must be included in a separate paper, since different matters are handled by different branches of the Office. *Note* 37 CFR 1.4(c) and 37 CFR 1.121.

included in the first sentence of the specification following the title.

The instant nonprovisional application was filed after November 29, 2000, and the claim for priority herein is submitted after expiration of the period specified in 37 CFR 1.78(a)(5)(ii). Also, the reference to the prior-filed provisional application was submitted during the pendency of the nonprovisional application for which the benefit is sought. *See* 35 U.S.C. §119(e). Accordingly, having found that the instant petition satisfies the conditions of 37 CFR 1.78(a)(6) for acceptance of an unintentionally delayed claim for priority under 35 U.S.C. §119(e), the petition to accept an unintentionally delayed claim of benefit to prior-filed provisional Application No. 60/029,944 is granted.

The granting of the petition to accept the delayed benefit claim to the prior-filed application under 37 CFR 1.78(a)(6) should not be construed as meaning that the instant application is entitled to the benefit of the filing date of the prior-filed application. In order for the instant application to be entitled to the benefit of the prior-filed application, all other requirements under 35 U.S.C. §119(e) and 37 CFR 1.78(a)(4) and (a)(5) must be met. Similarly, the fact that the corrected Filing Receipt accompanying this decision on petition includes the prior-filed application should not be construed as meaning that applicant is entitled to the claim for benefit of priority to the prior-filed application noted thereon. Accordingly, the examiner will, in due course, consider this benefit claim and determine whether the instant application is entitled to the benefit of the earlier filing date.

A corrected Filing Receipt, which includes the priority claim to the prior-filed provisional application, accompanies this decision on petition.

Any inquiries concerning this decision may be directed to Wan Laymon at (571) 272-3220.

The application is being forwarded to Technology Center AU 1711 for appropriate action on the amendments submitted on September 27, 2004 and November 9, 2004, including consideration by the examiner of the claim under 35 U.S.C. §119(e) for the benefit of priority to prior-filed provisional Application No. 60/029,944.

Frances Hicks

Frances Hicks
Lead Petitions Examiner
Office of Petitions
Office of the Deputy Commissioner
for Patent Examination Policy

ATTACHMENT: Corrected Filing Receipt

UNITED STATES PATENT AND TRADEMARK OFFICE

Commissioner for Patents
United States Patent and Trademark Office
P.O. Box 1450
Alexandria, VA 22313-1450
www.uspto.gov

Paper No. 6

BROWN & MICHAELS, PC
400 M & T BANK BUILDING
118 NORTH TIOGA ST
ITHACA, NY 14850

COPY MAILED

SEP 2 2 2004

OFFICE OF PETITIONS

In re Application of
John P. Kolarik
Application No. 10/156,915
Filed: May 29, 2002
Attorney Docket No. KOL-1DIV

: DECISION ON PETITION
: UNDER 37 CFR 1.78(a)(6)

This is a decision on the petition under 37 CFR 1.78(a)(6), filed June 16, 2004, to accept an unintentionally delayed claim under 35 U.S.C. §119(e) for the benefit of a prior-filed provisional Application No. 60/029,944, filed November 7, 1996.

The petition is **DISMISSED**.

A petition under 37 CFR 1.78(a)(6) is only applicable to those applications filed on or after November 29, 2000. Further, the petition is appropriate only after expiration of the period specified in 37 CFR 1.78(a)(5)(ii) and must be filed during the pendency of the nonprovisional application. In addition, the petition must be accompanied by:

(1) the reference required by 35 U.S.C. § 119(e) and 37 CFR 1.78(a)(5)(i) to the prior-filed application, unless previously submitted;
(2) the surcharge set forth in § 1.17(t); and
(3) a statement that the entire delay between the date the claim was due under 37 CFR 1.78(a)(5)(ii) and the date the claim was filed was unintentional. The Commissioner may require additional information where there is a question whether the delay was unintentional.

The instant petition does not comply with item (1) above.

Petitioner failed to submit an amendment to the first sentence of the specification following the title to include a proper reference to the prior-filed application or an Application Data Sheet (ADS).

Accordingly, before the petition under 37 CFR § 1.78(a)(6) can be granted, a renewed petition

under 37 CFR § 1.78(a)(6) and a substitute amendment[1] or an ADS stating the relationship of the prior-filed application to the instant application is required.

Further correspondence with respect to this matter should be addressed as follows:

By mail: Mail Stop PETITIONS
Commissioner for Patents
Post Office Box 1450
Alexandria, VA 22313-1450

By hand: Customer Window located at:
U.S. Patent and Trademark Office
220 20th Street S
Customer Window, Mail Stop Petitions
Crystal Plaza Two Lobby, Room 1B03
Arlington, VA 22202

By fax: (703) 872-9306
ATTN: Office of Petitions

Any questions concerning this matter may be directed to Wan Laymon at (703) 306-5685.

Frances Hicks

Frances Hicks
Lead Petitions Examiner
Office of Petitions
Office of the Deputy Commissioner
for Patent Examination Policy

[1] *Note* 37 CFR 1.121

UNITED STATES PATENT AND TRADEMARK OFFICE

Commissioner for Patents
United States Patent and Trademark Office
Washington, D.C. 20231
www.uspto.gov

Paper No. 5

REED SMITH, LLP
SUITE 1400
3110 FAIRVIEW PARK DRIVE
FALLS CHURCH, VA 22042

COPY MAILED

AUG 0 5 2002

OFFICE OF PETITIONS

In re Application of :
Ido, et al. :
Application No. 10/156,925 : ON PETITION
Filed: May 30, 2002 :
Attorney Docket No. NITT.0071 :

This is a decision on the "Petition," filed on July 11, 2002, which is being treated as a petition under 37 CFR 1.53, requesting that the above-identified application be accorded a filing date of May 30, 2002, including Figures 27 and 28 as described in the specification.

The application was filed on May 30, 2002. However, on July 1, 2002, the Office of Initial Patent Examination (OIPE) mailed a "Notice To File Missing Parts Of Nonprovisional Application" (Notice) that stated the application had been accorded a filing date, but Figures 27 and 28 as described in the specification appear to have been omitted.

In response, on July 11, 2002, the instant petition and a copy of Figures 27 and 28 as described in the specification were submitted. The papers were accompanied by a copy of applicant's postcard receipt that acknowledges receipt of twenty (20) sheets of drawings on May 30, 2002. The twenty (20) sheets of drawings contain Figures 1-28, with the twentieth sheet of drawings containing Figures 27 and 28. A review of the application file indicates the presence of only nineteen (19) sheets of drawings with the twentieth sheet containing Figures 27 and 28 missing. It is assumed that the twentieth sheet of drawings containing Figures 27 and 28 was misplaced by the Office.

In view of the above, the petition is granted.

The $130.00 petition fee submitted on July 11, 2002 will be refunded to deposit account no. 08-1480.

This application will be returned to OIPE for further processing with a filing date of May 30, 2002, using the copy of Figures 27 and 28 as described in the specification, supplied on July 11, 2002.

Telephone inquiries concerning this matter may be directed to Petitions Attorney Edward Tannouse at (703) 306-9200.

Edward J. Tannouse
Petitions Attorney
Office of Petitions
Office of the Deputy Commissioner
for Patent Examination Policy

Beverly M. Flanagan
Supervisory Petitions Examiner
Office of Petitions
Office of the Deputy Commissioner
for Patent Examination Policy

#4

UNITED STATES PATENT AND TRADEMARK OFFICE

UNDER SECRETARY OF COMMERCE FOR INTELLECTUAL PROPERTY AND
DIRECTOR OF THE UNITED STATES PATENT AND TRADEMARK OFFICE
WASHINGTON, DC 20231
www.uspto.gov

MAILED

JUN 04 2003

DIRECTOR'S OFFICE
TECHNOLOGY CENTER 3600

Bill Gallentine
615 Country Club Road
Hood River, OR 97031

Paper No. 4

In re application of
Bill Gallentine
Application No. 10/156,937
Filed: May 30, 2002
For: INSTANT MOUNT WHEELS FOR PORTABLE APPLIANCE

DECISION ON PETITION TO MAKE SPECIAL (APPLICANT'S AGE)

This is a decision on the petition submitted on May 30, 2002, under 37 CFR 1.102 (c) to make the above-identified application special under the procedure set forth in MPEP 708.02, Section IV: Applicant's Age. The delay in treating this petition is sincerely regretted.

The petition is **GRANTED**.

An application may be accorded special status upon the filing of a petition providing evidence showing that the applicant is at least 65 years old. Such a showing may be provided by evidence such as a birth certificate or a statement from the applicant.

The evidence submitted with the inventor's statement that Applicant is at least 65 years of age.

The examiner is directed (1) to make an interference search for possible interfering applications, (2) to promptly examine this application out of turn, and (3) if any interfering application is discovered, to examine such application simultaneously and state in the first official letter of such application that it is being taken out of turn because of a possible interference.

Petitioner is advised that this application will continue to be special, throughout its entire prosecution and pendency, including interference or appeal, if any, only if petitioner makes a prompt ***bona fide*** effort, in response to each Office action, to place the application in condition for allowance, even if it is necessary to conduct an interview with the examiner to accomplish this purpose.

SUMMARY: Petition to Make Special **GRANTED**.

Randolph A. Reese
Special Programs Examiner
Technology Center 3600
(703) 308-2121
(703) 605-0586 (fax)

RAR/dxn: 5/29/03

MP / $

OIPE JC95 AUG 2 8 2002 PATENT & TRADEMARK OFFICE

UNITED STATES PATENT AND TRADEMARK OFFICE

COMMISSIONER FOR PATENTS
UNITED STATES PATENT AND TRADEMARK OFFICE
WASHINGTON, D.C. 20231
www.uspto.gov

APPLICATION NUMBER	FILING/RECEIPT DATE	FIRST NAMED APPLICANT	ATTORNEY DOCKET NUMBER
10/156,995	05/28/2002	Tony N. Frudakis	DNA1140-7

CONFIRMATION NO. 6994

FORMALITIES LETTER

OC000000008433772

28213
GARY CARY WARE & FRIENDENRICH LLP
4365 EXECUTIVE DRIVE
SUITE 1600
SAN DIEGO, CA 92121-2189

Date Mailed: 07/11/2002

NOTICE TO FILE MISSING PARTS OF NONPROVISIONAL APPLICATION

08/29/2002 MBIZUNES 00000134 10156995

01 FC:201 370.00 OP
02 FC:205 65.00 OP

FILED UNDER 37 CFR 1.53(b)

Filing Date Granted

Items Required To Avoid Abandonment:

An application number and filing date have been accorded to this application. The item(s) indicated below, however, are missing. Applicant is given **TWO MONTHS** from the date of this Notice within which to file all required items and pay any fees required below to avoid abandonment. Extensions of time may be obtained by filing a petition accompanied by the extension fee under the provisions of 37 CFR 1.136(a).

- The statutory basic filing fee is missing.
  Applicant must submit $ **370** *to complete the basic filing fee for a small entity.*
- The oath or declaration is unsigned.
- To avoid abandonment, a late filing fee or oath or declaration surcharge as set forth in 37 CFR 1.16(l) of $65 for a small entity in compliance with 37 CFR 1.27, must be submitted with the missing items identified in this letter.

Items Required To Avoid Processing Delays:

The item(s) indicated below are also required and should be submitted with any reply to this notice to avoid further processing delays.

SUMMARY OF FEES DUE:

Total additional fee(s) required for this application is **$435** for a Small Entity

- **$370** Statutory basic filing fee.
- **$65** Late oath or declaration Surcharge.

A copy of this notice MUST be returned with the reply.

M. Mar[illegible]

Customer Service Center
Initial Patent Examination Division (703) 308-1202

PART 2 - COPY TO BE RETURNED WITH RESPONSE

OIPE JC95
AUG 2 8 2002
PATENT & TRADEMARK OFFICE

PATENT
Attorney Docket No.: DNA1140-7

IN THE UNITED STATES PATENT AND TRADEMARK OFFICE

Applicant:	Tony N. Frudakis	Art Unit:	1645
Application No.:	10/156,995	Examiner:	Unassigned
Filed:	May 28, 2002		
Title:	COMPOSITIONS AND METHODS FOR DETECTING POLYMORPHISMS ASSOCIATED WITH PIGMENTATION		

BOX MISSING PARTS
Commissioner for Patents
Washington, DC 20231

RESPONSE TO NOTICE TO FILE MISSING PARTS

Sir:

In response to the Notice to File Missing Parts of Nonprovisional Application mailed July 11, 2002, enclosed are:

1. One (1) copy of the Notice to File Missing Parts of Nonprovisional Application mailed July 11, 2002 (2 pages);
2. One (1) executed Declaration For Patent Application (3 pages);
3. One (1) Power of Attorney by Assignee (2 pages);
4. Check No. 516116 in the amount of $435.00; and
5. Return Receipt Postcard.

CERTIFICATION UNDER 37 CFR §1.8	
I hereby certify that the documents referred to as enclosed herein are being deposited with the United States Postal Service as first class mail on this date, **August 22, 2002**, in an envelope addressed to: Box MISSING PARTS, Commissioner for Patents, Washington, DC 20231.	
Aldon Griffis *(Name of Person Mailing Paper)*	
Aldon Griffis *(Signature)*	August 22, 2002 *(Date)*

Gray Cary\GT\6308699.1
105169-12

Applicants claim **small entity** status in the above-identified application. Pursuant to 37 C.F.R. § 1.27, a verified statement claiming small entity status is not required.

The filing fee has been calculated as follows.

	Number Filed		Number Extra		Rate			Fee	
					Small Entity	Large Entity		Small Entity	Large Entity
Total Claims	**20**-20	=	**0**	X	$09	$18	=	$ .00	$ .00
Independent Claims	**2**-3	=	**0**	X	$42	$84	=	$ .00	$ .00
Multiple Dependent Claims Presented: ___ Yes __X__ No					$140	$280		$ .00	$ .00
					BASIC FEE			$ 370.00	$ 740.00
					SURCHARGE FEE			$ 65.00	$ 130.00
					TOTAL FEE			**$ 435.00**	$ .00

Enclosed is Check No. 516116 in the total amount of $435.00; which consists of the $370.00 for the filing fee and $65.00 for the surcharge fee. The Commissioner is hereby authorized to charge any other fees that may be associated with this communication, or credit any overpayment to Deposit Account No. 50-1355. A duplicate copy of this sheet is enclosed.

Respectfully submitted,

Date: August 22, 2002

Richard J. Imbra
Registration No. 37,643
Telephone: (858) 677-1496
Facsimile: (858) 677-1465

USPTO CUSTOMER NUMBER 28213
GRAY CARY WARE & FREIDENRICH LLP
4365 Executive Drive, Suite 1100
San Diego, California 92121-2133

OIPE JC34
AUG 0 1 2002
PATENT & TRADEMARK OFFICE

TID 43 MP

Atty. Dkt. No. 040373-0322

IN THE UNITED STATES PATENT AND TRADEMARK OFFICE

Applicant: Hiroshi SAKAI et al.

Title: METHOD OF MOUNTING ELECTRONIC PARTS WITH Sn-Zn SOLDER FREE OF Pb WITHOUT REDUCTION IN BONDING STRENGTH

Appl. No.: 10/157,010

Filing Date: 05/30/2002

Examiner: Unassigned

Art Unit: 2835

TRANSMITTAL OF MISSING PARTS OF PATENT APPLICATION

Commissioner for Patents
Washington, D.C. 20231

Attn: BOX MISSING PARTS

Sir:

In response to the Notice to File Missing Parts of Application mailed on June 28, 2002, in the above-identified application, transmitted herewith are the missing parts needed to complete the filing of the subject patent application.

Enclosed are:

[X] Declaration and Power of Attorney (4 pages)

[X] Formal Drawings Transmittal (1 page)

[X] Formal Drawings (3 sheets, Figs. 1-4)

[X] Return Copy of Notice to File Missing Parts

The filing fee is calculated below:

	Claims as Filed		Included in Basic Fee		Extra Claims		Rate		Fee Totals
Basic Fee							$740.00		$740.00
Total Claims:	5	-	20	=	0	x	$18.00	=	$0.00
Independents:	3	-	3	=	0	x	$84.00	=	$0.00
If any Multiple Dependent Claim(s) present:						+	$280.00	=	$0.00
Surcharge under 37 CFR 1.16(e) for late filing of Executed Declaration and late payment of filing fee						+	$130.00	=	$130.00

002.868334.1

Atty. Dkt. No. 040373-0322

	SUBTOTAL:	=	$870.00
[ ]	Small Entity Fees Apply (subtract ½ of above):	=	$0.00
	TOTAL FILING FEE:	=	$870.00
	TOTAL FEE	=	$870.00
Difference to pay:	- $0.00	-	$870.00

[X] Check in the amount of $870.00 in payment of $740.00 for official Government filing fee and $130.00 surcharge fee (37 C.F.R. § 1.16(e)).

The Commissioner is hereby authorized to charge any additional fees which may be required regarding this application under 37 C.F.R. §§ 1.16-1.17, or credit any overpayment, to Deposit Account No. 19-0741. Should no proper payment be enclosed herewith, as by a check being in the wrong amount, unsigned, post-dated, otherwise improper or informal or even entirely missing, the Commissioner is authorized to charge the unpaid amount to Deposit Account No. 19-0741.

Respectfully submitted,

Date August 1, 2002

By Aaron C. Chatterjee
Reg # 41,398

for David A. Blumenthal
Attorney for Applicant
Registration No. 26,257

FOLEY & LARDNER
Customer Number: 22428
22428
PATENT TRADEMARK OFFICE
Telephone: (202) 672-5407
Facsimile: (202) 672-5399

002.868334.1

#4

Atty. Dkt. No. 040373-0322

OIPE JC34
AUG 0 1 2002
PATENT & TRADEMARK OFFICE

IN THE UNITED STATES PATENT AND TRADEMARK OFFICE

Applicant: Hiroshi Sakai et al.

Title: METHOD OF MOUNTING ELECTRONIC PARTS WITH Sn-Zn SOLDER FREE OF Pb WITHOUT REDUCTION IN BONDING STRENGTH

Appl. No.: 10/157,010

Filing Date: 05/30/2002

Examiner: Unassigned

Art Unit: 2835

TRANSMITTAL OF FORMAL DRAWINGS

Commissioner for Patents
Washington, D.C. 20231

ATTENTION: DRAWING REVIEW BRANCH

Sir:

Transmitted herewith are the formal drawings (3 sheets, Figures 1-4) for the above-identified application. The Official Draftsperson is respectfully requested to approve these drawings for entry into the application.

Respectfully submitted,

Date August 1, 2002

By Aaron C. Chatterjee Reg# 41,398

for David A. Blumenthal
Attorney for Applicant
Registration No. 26,257

FOLEY & LARDNER
Customer Number: 22428

22428
PATENT TRADEMARK OFFICE

Telephone: (202) 672-5407
Facsimile: (202) 672-5399

UNITED STATES PATENT AND TRADEMARK OFFICE

COMMISSIONER FOR PATENTS
UNITED STATES PATENT AND TRADEMARK OFFICE
WASHINGTON, D.C. 20231
www.uspto.gov

AUG 0 1 2002
JC34
PATENT & TRADEMARK OFFICE

APPLICATION NUMBER	FILING/RECEIPT DATE	FIRST NAMED APPLICANT	ATTORNEY DOCKET NUMBER
10/157,010	05/30/2002	Hiroshi Sakai	040373-0322

22428
FOLEY AND LARDNER
SUITE 500
3000 K STREET NW
WASHINGTON, DC 20007

CONFIRMATION NO. 4921
FORMALITIES LETTER
OC000000008370930

Date Mailed: 06/28/2002

NOTICE TO FILE MISSING PARTS OF NONPROVISIONAL APPLICATION

FILED UNDER 37 CFR 1.53(b)

Filing Date Granted

Items Required To Avoid Abandonment:

An application number and filing date have been accorded to this application. The item(s) indicated below, however, are missing. Applicant is given **TWO MONTHS** from the date of this Notice within which to file all required items and pay any fees required below to avoid abandonment. Extensions of time may be obtained by filing a petition accompanied by the extension fee under the provisions of 37 CFR 1.136(a).

- The statutory basic filing fee is missing.
  *Applicant must submit $ **740** to complete the basic filing fee for a non-small entity. If appropriate, applicant may make a written assertion of entitlement to small entity status and pay the small entity filing fee (37 CFR 1.27).*
- The oath or declaration is unsigned.
- To avoid abandonment, a late filing fee or oath or declaration surcharge as set forth in 37 CFR 1.16(l) of $130 for a non-small entity, must be submitted with the missing items identified in this letter.

Items Required To Avoid Processing Delays:

The item(s) indicated below are also required and should be submitted with any reply to this notice to avoid further processing delays.

SUMMARY OF FEES DUE:

Total additional fee(s) required for this application is $**870** for a Large Entity

- $**740** Statutory basic filing fee.
- $**130** Late oath or declaration Surcharge.

08/05/2002 MBERHE 00000052 10157010

01 FC:101 740.00 OP
02 FC:105 130.00 OP

A copy of this notice MUST be returned with the reply.

Customer Service Center
Initial Patent Examination Division (703) 308-1202

PART 2 - COPY TO BE RETURNED WITH RESPONSE

UNITED STATES PATENT AND TRADEMARK OFFICE

COMMISSIONER FOR PATENTS
UNITED STATES PATENT AND TRADEMARK OFFICE
WASHINGTON, D.C. 20231
www.uspto.gov

Paper No. 4

PILLSBURY WINTHROP, LLP
P.O. BOX 10500
MCLEAN, VA 22102

COPY MAILED

NOV 0 4 2002

OFFICE OF PETITIONS

In re Application of	:	
Mulder et al.	:	
Application No. 10/157,033	:	DECISION GRANTING
Filed: May 30, 2002	:	PETITION
Attorney Docket No. 81468/291113	:	

This is a decision on the petition filed September 5, 2002, to establish that Figures 6, 7, and 8 were part of the originally filed application.

On May 30, 2002, the application was filed.

On July 9, 2002, the Office of Initial Patent Examination mailed a Notice stating that the application had been accorded a filing date of May 30, 2002, and advising applicants that Figures 6, 7, and 8 described in the specification appeared to have been omitted.

In response, the present petition was filed alleging that Figures 6, 7, and 8 were deposited on May 30, 2002. In support, petitioner has submitted a postcard receipt which acknowledges receipt of 8 sheets of drawings on May 30, 2002.[1] Petitioner has also submitted a copy of the missing documentation- 2 sheets of drawings consisting of Figures 6, 7, and 8.

Upon review of the record, Figures 6, 7, and 8 deposited on May 30, 2002, have not been located. However, the evidence is convincing that the application papers deposited on May 30, 2002, included Figures 6, 7, and 8, and that the figures were subsequently misplaced in the PTO.

In view of the above, the petition is **granted**. The copy of Figures 6, 7, and 8 submitted with the petition will be used for examination purposes.

The petition fee of $130 will be refunded to petitioner's deposit account.

The Notice mailed July 9, 2002, is hereby vacated to the extent the Notice stated Figures 6, 7, and 8 were omitted.

The Application is being returned to the Office of Initial Patent Examination for further processing with a filing date of May 30, 2002, using the application papers filed on May 30, 2002, and the copy of Figures 6, 7, and 8 filed on September 5, 2002.

---

[1] Evidence of receipt of any correspondence filed in the Patent and Trademark Office can be obtained by submitting a self addressed post card properly itemizing and identifying the paper or papers being filed. Upon receipt of the correspondence, the Patent and Trademark Office will check the listing on the post card against the papers submitted, making sure that all items listed are present and will then stamp the postcard with an Official date stamp and place the post card in the outgoing mail. "A post card receipt which itemizes and properly identifies the papers which are being filed serves as *prima facie* evidence of receipt in the PTO of all items listed thereon by the PTO." M.P.E.P. § 503.

Telephone inquiries should be directed to Petitions Attorney Steven Brantley at (703) 306-5683.

Charles Steven Brantley
Petitions Attorney
Office of Petitions
Office of the Deputy Commissioner
for Patent Examination Policy

UNITED STATES PATENT AND TRADEMARK OFFICE

Commissioner for Patents
United States Patent and Trademark Office
P.O. Box 1450
Alexandria, VA 22313-1450
www.uspto.gov

STITES & HARBISON PLLC
1199 NORTH FAIRFAX STREET
SUITE 900
ALEXANDRIA VA 22314

COPY MAILED

SEP 3 0 2005

OFFICE OF PETITIONS

In re Patent No. 6,723,578	:	
Application No. 10/157,039	:	
Filed: May 30, 2002	:	ON PETITION
Issued: April 20, 2004	:	
Attorney Docket No. P07648US00/BAS	:	

This is a decision on the petition filed August 11, 2005, which is being treated as a request under 37 CFR 3.81[1] to include both assignees on the front page of the above-identified patent by way of a Certificate of Correction.

The request under 37 CFR 3.81 is **GRANTED**.

Telephone inquiries should be directed to Paralegal Liana Chase at (571) 272-3282. Any questions concerning the issuance of the Certificate of Correction should be directed to the Certificate of Corrections Branch at (703) 305-8309.

This matter is being referred to the Certificates of Correction Branch for issuance of the requested Certificate of Correction.

Frances Hicks
Petitions Examiner
Office of Petitions

[1] See Official Gazette of June 22, 2004

UNITED STATES PATENT AND TRADEMARK OFFICE

COMMISSIONER FOR PATENTS
UNITED STATES PATENT AND TRADEMARK OFFICE
P.O. BOX 1450
ALEXANDRIA, VA 22313-1450
www.uspto.gov

MCDERMOTT WILL & EMERY LLP
600 13TH STREET, N.W.
WASHINGTON DC 20005-3096

COPY MAILED

MAY 19 2006

OFFICE OF PETITIONS

In re Application of	:
Kunihiko Miyazaki et al	:
Application No. 10/157,042	: DECISION ON PETITION
Filed: May 30, 2002	: UNDER 37 CFR 1.78(a)(3)
Attorney Docket No. 62807-077	:

This is a decision on the petition under 37 CFR 1.78(a)(3), filed April 6, 2006, to accept an unintentionally delayed claim under 35 U.S.C. § 120 for the benefit of priority to the prior-filed nonprovisional applications set forth in the amendment filed with the petition.

The petition is **GRANTED**.

A petition for acceptance of a claim for late priority under 37 CFR 1.78(a)(3) is only applicable to those applications filed on or after November 29, 2000. Further, the petition is appropriate only after the expiration of the period specified in 37 CFR 1.78(a)(2)(ii). In addition, the petition under 37 CFR 1.78(a)(3) must be accompanied by:

(1) the reference required by 35 U.S.C. § 120 and 37 CFR 1.78(a)(2)(i) of the prior-filed application, unless previously submitted;
(2) the surcharge set forth in § 1.17(t); and
(3) a statement that the entire delay between the date the claim was due under 37 CFR 1.78(a)(2)(ii) and the date the claim was filed was unintentional. The Director may require additional information where there is a question whether the delay was unintentional.

All of the above requirements having been satisfied, the late claim for priority under 35 U.S.C. § 120 is accepted as being unintentionally delayed.

The granting of the petition to accept the delayed benefit claim to the prior-filed applications under 37 CFR 1.78(a)(3) should not be construed as meaning that this application is entitled to the benefit of the prior-filed applications. In order for this application to be entitled to the benefit of the prior-filed applications, all other requirements under 35 U.S.C. § 120 and 37 CFR 1.78(a)(1) and (a)(2) must be met. Similarly, the fact that the corrected Filing Receipt accompanying this decision on petition includes the prior-filed applications should not be construed as meaning that applicant is entitled to the claim for benefit of priority to the prior-

filed applications noted thereon. Accordingly, the examiner will, in due course, consider this benefit claim and determine whether the application is entitled to the benefit of the earlier filing date.

A corrected Filing Receipt, which includes the priority claim to the prior-filed nonprovisional applications, accompanies this decision on petition.

Any inquiries concerning this decision may be directed to the undersigned at (571) 272-3208. All other inquiries concerning either the examination procedures or status of the application should be directed to the Technology Center.

This application is being forwarded to Technology Center Art Unit 2132 for consideration by the examiner of applicant's entitlement to claim benefit of priority under 35 U.S.C. § 120 to the prior-filed applications.

Karen Creasy

Karen Creasy
Petitions Examiner
Office of Petitions

ATTACHMENT: Corrected Filing Receipt

SPE RESPONSE FOR CERTIFICATE OF CORRECTION

Paper No.: X

DATE : **AUGUST 2, 2007**

TO SPE OF : ART UNIT **2813**

SUBJECT : Request for Certificate of Correction for Appl. No.: **10157046** Patent No.: **6897477B2**

A response is requested with respect to a request for a certificate of correction.

With respect to the change(s) requested to correct Office and/or Applicant's errors, should the patent read as shown in the certificate of correction attached herewith or the COCIN document(s), in IFW images for the above-identified patented application? No new matter should be introduced, nor should the scope or meaning of the claims be changed.

If the response is for an IFW, within 7 days, please complete and forward the response, to the employee (named below) via scanning into application images, using document code **COCX**.

DO NOT SENT TO ATTORNEY

If the response is for a paper file wrapper, please complete the response and forward the response with the paper file wrapper, to the employee (named below), within **7** days, to:

Certificates of Correction Branch (CofC)
South Tower - 9A22
Palm Location 7580

VIRGINIA TOLBERT
Certificates of Correction Branch
703-308-9390 ext. 113

Thank You For Your Assistance

The request for issuing the above-identified correction(s) is hereby:

Note your decision on the appropriate box.

X Approved	**All** changes apply.
☐ **Approved in Part**	Specify below which changes **do not** apply.
☐ **Denied**	State the reasons for denial below.

Comments: Approved

Carl Whitehead Jr. **2813**
SPE **Art Unit**

UNITED STATES PATENT AND TRADEMARK OFFICE

Commissioner for Patents
United States Patent and Trademark Office
P.O. Box 1450
Alexandria, VA 22313-1450
www.uspto.gov

#20

FINNEGAN HENDERSON FARABOW
GARRETT & DUNNER, LLP
1300 I STREET, NW
WASHINGTON, D.C. 20005

COPY MAILED

AUG 2 0 2004

OFFICE OF PETITIONS

In re Application of :
Karl L. Ginter et al :
Application No. 10/157,061 :
Filed: May 30, 2002 :
Attorney Docket No. 7451.0001-20

ON PETITION

This is a decision on the petition, filed August 17, 2004, under 37 CFR 1.313(c)(2) to withdraw the above-identified application from issue after payment of the issue fee.

The petition is **GRANTED**.

The above-identified application is withdrawn from issue for consideration of a submission under 37 CFR 1.114 (request for continued examination). See 37 CFR 1.313(c)(2).

Petitioner is advised that the issue fee paid on July 28, 2004 in the above-identified application cannot be refunded. If, however, the above-identified application is again allowed, petitioner may request that it be applied towards the issue fee required by the new Notice of Allowance.[1]

Telephone inquiries should be directed to Irvin Dingle at (703) 306-5684.

The file will be forwarded to Technology Center AU 2132 for processing of the request for continued examination under 37 CFR 1.114 and for consideration of the concurrently filed Information Disclosure Statement.

Irvin Dingle
Petitions Examiner
Office of Petitions
Office of the Deputy Commissioner
for Patent Examination Policy

---

[1] The request to apply the issue fee to the new Notice may be satisfied by completing and returning the new Issue Fee Transmittal Form PTOL-85(b), which includes the following language thereon: Commissioner for Patents is requested to apply the Issue Fee and Publication Fee (if any) or re-apply any previously paid issue fee to the application identified above. Petitioner is advised that, whether a fee is indicated as being due or not, the Issue Fee Transmittal Form **must** be completed and timely submitted to avoid abandonment. Note the language in bold text on the first page of the Notice of Allowance and Fee(s) Due (PTOL-85).

UNITED STATES PATENT AND TRADEMARK OFFICE

Commissioner for Patents
United States Patent and Trademark Office
P.O. Box 1450
Alexandria, VA 22313-1450
www.uspto.gov

OLIFF & BERRIDGE
P.O. BOX 19928
ALEXANDRIA, VA 22320

COPY MAILED

FEB 24 2005

OFFICE OF PETITIONS

ON PETITION

In re Application of :
Hidetoshi Kusumi et al :
Application No. 10/157,085 :
Filed: May 30, 2002 :
Attorney Docket No. 112394 :

This is a decision on the petition, filed February 24, 2005, under 37 CFR 1.313(c)(2) to withdraw the above-identified application from issue after payment of the issue fee.

The petition is **GRANTED**.

The above-identified application is withdrawn from issue for consideration of a submission under 37 CFR 1.114 (request for continued examination). See 37 CFR 1.313(c)(2).

Petitioner is advised that the issue fee paid on December 29, 2004 in the above-identified application cannot be refunded. If, however, the above-identified application is again allowed, petitioner may request that it be applied towards the issue fee required by the new Notice of Allowance.[1]

Telephone inquiries should be directed to Wan Laymon at (571) 272-3220.

This matter is being referred to Technology Center AU 2831 for processing of the request for continued examination under 37 CFR 1.114 and for consideration of the concurrently filed IDS.

Wan Laymon
Petitions Examiner
Office of Petitions
Office of the Deputy Commissioner
for Patent Examination Policy

---

[1] The request to apply the issue fee to the new Notice may be satisfied by completing and returning the new Issue Fee Transmittal Form PTOL-85(b), which includes the following language thereon: "Commissioner for Patents is requested to apply the Issue Fee and Publication Fee (if any) or re-apply any previously paid issue fee to the application identified above." Petitioner is advised that, whether a fee is indicated as being due or not, the Issue Fee Transmittal Form must be completed and timely submitted to avoid abandonment. Note the language in bold text on the first page of the Notice of Allowance and Fee(s) Due (PTOL-85).

UNITED STATES PATENT AND TRADEMARK OFFICE

COMMISSIONER FOR PATENTS
UNITED STATES PATENT AND TRADEMARK OFFICE
P.O. BOX 1450
ALEXANDRIA, VA 22313-1450

www.uspto.gov

Date : February 24, 2005

TO : Director, Office of Patent Publication

FROM : Office of the Deputy Commissioner
for Patent Examination Policy

SUBJECT : Withdrawal from Issue of

Applicant(s) : Hidetoshi Kusumi et al
Application No. : 10/157,085
Filed : May 30, 2002

The above-identified application has been assigned Patent No. 6,867,363 and an issue date of March 15, 2005.

It is hereby directed that this application be withdrawn from issue at the request of the applicants. Do not refund the issue fee.

The following erratum should be published in the Official Gazette if the above-identified application is published in the OG of March 15, 2005:

"All reference to Patent No. 6,867,363 to Hidetoshi Kusumi et al of Nagoya-shi, JAPAN for POWER CONTROL UNIT FOR VEHICLE appearing in the Official Gazette of March 15, 2005 should be deleted since no patent was granted."

Wan Laymon
Petitions Examiner
Office of Petitions
Office of the Deputy Commissioner
for Patent Examination Policy

cc: Paul Harrison; Crystal Park 3, Suite 441 (FAX-703-306-2737)
Deneise Boyd, Crystal Park 2, Suite 1100 (FAX-308-5413)
Mary Louise McAskill, Crystal Park 3-910 (FAX 305-4372)
Niomi Farmer, Crystal Park 3-910 (FAX-305-4372)
Mary E. Johnson (Cookie), P/OCS, CM1-6D07
Duane Davis (CDS), CM1-6A07
Tamara K. Greene, PK3-910

UNITED STATES PATENT AND TRADEMARK OFFICE

COMMISSIONER FOR PATENTS
UNITED STATES PATENT AND TRADEMARK OFFICE
P.O. BOX 1450
ALEXANDRIA, VA 22313-1450
www.uspto.gov

GLORIA O'BANNON
INNOVENE, INC.
200 EAST RANDOLPH ST.
SUITE 2500
CHICAGO, IL 60601

COPY MAILED

FEB 13 2007

OFFICE OF PETITIONS

In re Application of :
TWU et al :
Application No.: 10/157,172 : DECISION ON PETITION
Filing Date: May 29, 2002 : UNDER 37 CFR 1.137(B)
Attorney Docket No.: 37364-00 :

This is a decision on the petition under 37 CFR 1.137(b), filed November 7, 2006, to revive the above-identified application.

The petition is **GRANTED.**

The above-identified application became abandoned for failure to reply in a timely manner to the final Office action mailed April 3, 2006, which set a three (3) month statutory period for reply. No extensions of time under the provisions of 37 CFR 1.136(a) were obtained. Accordingly, by operation of law, the above-identified application became abandoned on July 4, 2006.

The petition satisfies the conditions for revival pursuant to the provisions of 37 CFR 1.137(b) in that (1) the reply in the form of a Request for Continued Examination (RCE); (2) the petition fee; and (3) the required statement of unintentional delay have been received. Accordingly, the reply to the final Office action mailed April 3, 2006 is accepted as having been unintentionally delayed.

This application is being referred to Technology Center AU 1712 for appropriate action on the reply in due course.

Telephone inquiries concerning this decision should be directed to the undersigned at (571) 272-3303.

Bryan Lin

Bryan Lin
Legal Examiner
Office of the Deputy Commissioner
for Patent Examination Policy

SPE: B. Shalwala

SPE RESPONSE FOR CERTIFICATE OF CORRECTION

Paper No.: _____

DATE : 8/21/04

TO SPE OF : ART UNIT 2629

SUBJECT : Request for Certificate of Correction for Appl. No.: 10/152,183 Patent No.: 7053871

Please respond to this request for a certificate of correction within 7 days.

Please review the requested changes/corrections as shown in the **COCIN** document(s) in the IFW application image. No new matter should be introduced, nor should the scope or meaning of the claims be changed.

Please complete the response (see below) and forward the completed response to scanning using document code **COCX**.

Lamonte M. Newsome
Certificates of Correction Branch
703-308-9390 ext. 112

Thank You For Your Assistance

The request for issuing the above-identified correction(s) is hereby:
Note your decision on the appropriate box.

- ☒ **Approved** — All changes apply.
- ☐ **Approved in Part** — Specify below which changes **do not** apply.
- ☐ **Denied** — State the reasons for denial below.

Comments: _____

RICHARD HJERPE
SUPERVISORY PATENT EXAMINER
TECHNOLOGY CENTER 2600

SPE

2629
Art Unit

UNITED STATES PATENT AND TRADEMARK OFFICE

Commissioner for Patents
United States Patent and Trademark Office
P.O. Box 1450
Alexandria, VA 22313-1450
www.uspto.gov

James C. Wray
1493 Chain Bridge Road
Suite 300
McLean, VA 22101

COPY MAILED

SEP 0 2 2004

OFFICE OF PETITIONS

NOTICE

In re Application of :
Hank C.K. Wuh, et. al. :
Application No. 10/157,185 :
Filed: May 30, 2002 :
Attorney Docket No. DAILY WELLNESS :

This is a notice regarding your request for acceptance of a fee deficiency submission under 37 CFR 1.28. On September 1, 1998, the Court of Appeals for the Federal Circuit held that 37 CFR 1.28(c) is the sole provision governing the time for correction of the erroneous payment of the issue fee as a small entity. **See DH Technology v. Synergystex International, Inc. 154 F.3d 1333, 47 USPQ2d 1865 (Fed. Cir. Sept. 1, 1998).**

The Office no longer investigates or rejects original or reissue applications under 37 CFR 1.56. **1098 Off. Gaz. Pat. Office 502 (January 3, 1989)**. Therefore, nothing in this Notice is intended to imply that an investigation was done.

Your fee deficiency submission under 37 CFR 1.28 is hereby **ACCEPTED**.

This file is being referred to Technology Center Art Unit 1654 for further examination.

Inquiries related to this communication should be directed to Andrea Smith at (703) 308-6711.

Andrea Smith
Petitions Examiner
Office of Petitions
Office of the Deputy Commissioner
for Patent Examination Policy

UNITED STATES PATENT AND TRADEMARK OFFICE

Commissioner for Patents
United States Patent and Trademark Office
P.O. Box 1450
Alexandria, VA 22313-1450
www.uspto.gov

James C. Wray
Suite 300
1493 Chain Bridge Road
McLean VA 22101

COPY MAILED

MAY 0 3 2005

OFFICE OF PETITIONS

In re Application of
Wuh, et al.
Application No. 10/157,185
Filed: May 30, 2002
Attorney Docket No. DAILY WELLNESS

: DECISION ON PETITIONS
: UNDER 37 CFR §1.78(a)(3) AND
: UNDER 37 CFR §1.78(a)(6)
:

This is a decision on the petition under 37 CFR §§ 1.78(a)(3) and 1.78(a)(6), filed December 7, 2004, to accept an unintentionally delayed claim under 35 U.S.C. §§120, 365(c) and 119(e) for the benefit of the prior-filed applications set forth in the concurrently filed amendment.

The petitions are **dismissed**.

A petition for acceptance of a claim for late priority under 37 CFR §§ 1.78(a)(3) and 1.78(a)(6) is only applicable to those applications filed on or after November 29, 2000. Further, the petition is appropriate only after the expiration of the period specified in 37 CFR §§ 1.78(a)(2)(ii) and 1.78(a)(5)(ii). In addition, the petition under 37 CFR §§ 1.78(a)(3) and 1.78(a)(6) must be accompanied by:

(1) the reference required by 35 U.S.C. §§ 120 and 119(e) and 37 CFR §§ 1.78(a)(2)(i) and 1.78(a)(5)(i) of the prior-filed application, unless previously submitted;
(2) the surcharge set forth in § 1.17(t); and
(3) a statement that the entire delay between the date the claim was due under 37 CFR §§ 1.78(a)(2)(ii) and 1.78(a)(5)(ii) and the date the claim was filed was unintentional. The Commissioner may require additional information where there is a question whether the delay was unintentional.

The petition does not comply with requirements (1) and (3).

With respect to (1), the amendment to the first sentence of the specification following the title is

not in compliance with 37 CFR 1.121. Only a reference to application no. 60/295,297 was present on filing. It is noted that on April 3, 2003 petitioner attempted to add a benefit claim to application no. 09/410,446, application no. PCT/US99/07427, application no. 60/080,009, and application no. 60/093,164. This claim was filed beyond the expiration of the period specified in 37 CFR §§ 1.78(a)(2)(ii) and 1.78(a)(5)(ii). It was a delayed benefit claim that could not be added without a petition under 37 CFR § 1.78(a)(3) and 37 CFR § 1.78(a)(6). Therefore, the June 14, 2004 amendment to the specification is not in compliance with 37 CFR 1.121 because not all added material is so designated. Every application other than application no. 60/295,297 must be designated as added material in another amendment.

With respect to (3), the statement of unintentional delay does not appear to address all the applications for which delayed benefit is claimed. Please clarify the statement.

Further correspondence with respect to this matter should be addressed as follows:

By mail: Mail Stop PETITION
Commissioner for Patents
Post Office Box 1450
Alexandria, VA 22313-1450

By hand: U.S. Patent and Trademark Office
Customer Service Window, Mail Stop Petition
Randolph Building
401 Dulany Street
Alexandria, VA 22314

By FAX: (703) 872-9306 – ATTN: Office of Petitions

Any questions concerning this matter may be directed to Petitions Attorney E. Shirene Willis at (571) 272-3230.

Frances Hicks

Frances Hicks
Lead Petitions Examiner
Office of Petitions
Office of the Deputy Commissioner
for Patent Examination Policy

UNITED STATES PATENT AND TRADEMARK OFFICE

Commissioner for Patents
United States Patent and Trademark Office
P.O. Box 1450
Alexandria, VA 22313-1450
www.uspto.gov

James C. Wray
Suite 300
1493 Chain Bridge Road
McLean VA 22101

COPY MAILED

JUN 14 2005

OFFICE OF PETITIONS

In re Application of
Wuh, et al.
Application No. 10/157,185
Filed: May 30, 2002
Attorney Docket No. DAILY WELLNESS

: DECISION ON PETITIONS
: UNDER 37 CFR §1.78(a)(3) AND
: UNDER 37 CFR §1.78(a)(6)
:

This is a decision on the reconsideration petition under 37 CFR §§ 1.78(a)(3) and 1.78(a)(6), filed May 23, 2005, to accept an unintentionally delayed claim under 35 U.S.C. §§120, 365(c) and 119(e) for the benefit of the prior-filed applications set forth in the concurrently filed amendment.

The petitions are **granted**.

A petition for acceptance of a claim for late priority under 37 CFR §§ 1.78(a)(3) and 1.78(a)(6) is only applicable to those applications filed on or after November 29, 2000. Further, the petition is appropriate only after the expiration of the period specified in 37 CFR §§ 1.78(a)(2)(ii) and 1.78(a)(5)(ii). In addition, the petition under 37 CFR §§ 1.78(a)(3) and 1.78(a)(6) must be accompanied by:

(1) the reference required by 35 U.S.C. §§ 120 and 119(e) and 37 CFR §§ 1.78(a)(2)(i) and 1.78(a)(5)(i) of the prior-filed application, unless previously submitted;
(2) the surcharge set forth in § 1.17(t); and
(3) a statement that the entire delay between the date the claim was due under 37 CFR §§ 1.78(a)(2)(ii) and 1.78(a)(5)(ii) and the date the claim was filed was unintentional. The Commissioner may require additional information where there is a question whether the delay was unintentional.

The instant nonprovisional application was filed after November 29, 2000, and the claim for the benefit of priority to the prior-filed applications is submitted after expiration of the period

specified in 37 CFR §§ 1.78(a)(2)(ii) and 1.78(a)(5)(ii). Therefore, this is a proper petition under 37 CFR §§ 1.78(a)(3) and 1.78(a)(6).

The instant nonprovisional application was pending at the time of filing of the reference to the prior-filed provisional applications as required by 37 CFR 1.78(a)(5)(ii). Additionally, newly claimed PCT International Patent Application No. PCT/US99/07427, filed on April 2, 1999, was filed within twelve months of the filing date of the prior-filed provisional applications, Application No. 60/080,009, which was filed on April 3, 1998 and Application No. 60/093,164, which was filed on July 17, 1998, for which priority is claimed.

The petition complies with the requirements for a grantable petition under 37 CFR §§1.78(a)(3) and 1.78(a)(6) in that (1) a reference to the prior-filed provisional, PCT, and nonprovisional applications has been included in an amendment to the first sentence of the specification following the title, as provided by 37 CFR §§ 1.78(a)(2)(iii) and 1.78(a)(5)(iii); (2) the surcharge fee required by 37 CFR 1.17(t) has been submitted; and (3) the petition contains a proper statement of unintentional delay. Accordingly, having found that the instant petition for acceptance of an unintentionally delayed claim for the benefit of priority under 35 U.S.C. §§§ 120, 365(c), and 119(e) to the above-noted, prior-filed provisional, PCT, and nonprovisional applications satisfies the conditions of 37 CFR §§ 1.78(a)(3) and 1.78(a)(6), the petition is granted.

The granting of the petition to accept the delayed benefit claim to the prior-filed applications under 37 CFR §§ 1.78(a)(3) and 1.78(a)(6) should <u>not</u> be construed as meaning that the instant application is entitled to the benefit of the filing date of the prior-filed applications. In order for the instant application to be entitled to the benefit of the prior-filed applications, all other requirements under 35 U.S.C. §§120 and 365(c) and 1.78(a)(1) and (a)(2) and under 35 U.S.C. §119(e) and 37 CFR 1.78(a)(4) and (a)(5) must be met. Similarly, the fact that the corrected Filing Receipt accompanying this decision on petition includes the prior-filed applications should <u>not</u> be construed as meaning that applicant is entitled to the claim for benefit of priority to the prior-filed applications noted thereon. Accordingly, the examiner will, in due course, consider this benefit claim and determine whether the instant application is entitled to the benefit of the earlier filing dates.

A corrected Filing Receipt, which includes the priority claim to the prior-filed applications, accompanies this decision on petition.

Any questions concerning this matter may be directed to Petitions Attorney E. Shirene Willis at (571) 272-3230. All other inquiries concerning either the examination procedures or status of the application should be directed to the Technology Center.

This application is being forwarded to Technology Center Art Unit 1651 for appropriate action on the amendment submitted May 23, 2005, including consideration by the examiner of the claim under 35 U.S.C. § §120 and 365(c) and 37 CFR 1.78(a)(2) for the benefit of the prior-filed applications, and for consideration of the claim under 35 U.S.C. §119(e) and 37 CFR 1.78(a)(5) for the benefit of the prior-filed provisional applications.

Frances Hicks

Frances Hicks
Lead Petitions Examiner
Office of Petitions
Office of the Deputy Commissioner
for Patent Examination Policy

ATTACHMENT: Corrected Filing Receipt

UNITED STATES PATENT AND TRADEMARK OFFICE

UNITED STATES DEPARTMENT OF COMMERCE
United States Patent and Trademark Office
Address: COMMISSIONER FOR PATENTS
P.O. Box 1450
Alexandria, Virginia 22313-1450
www.uspto.gov

DAVIS WRIGHT TREMAINE, LLP/Seattle
1201 Third Avenue, Suite 2200
SEATTLE, WA 98101-3045

Mail Date: 04/26/2010

Applicant	: Gamal E. Khalil	: DECISION ON REQUEST FOR
Patent Number	: 7592184	: RECALCULATION of PATENT
Issue Date	: 09/22/2009	: TERM ADJUSTMENT IN VIEW
Application No	: 10/157,209	: OF WYETH AND NOTICE OF INTENT TO
Filed	: 05/28/2002	: ISSUE CERTIFICATE OF CORRECTION
		:

The Request for Recalculation is **GRANTED** to the extent indicated.

The patent term adjustment has been determined to be **421** days. The USPTO will *sua sponte* issue a certificate of correction reflecting the amount of PTA days determined by the recalculation.

Prior to the issuance of the certificate of correction, the USPTO will afford patentee an opportunity to be heard and request reconsideration. Accordingly, patentee has **one month or thirty (30) days**, whichever is longer, to file a request for reconsideration of this patent term adjustment calculation. See 35 U.S.C. 154(b)(3)(B)(ii) and 37 CFR 1.322(a)(4). No extensions of time will be granted under 37 CFR 1.136.

Patentee should use document code PET.OP if electronically filing a request for reconsideration of this patent term adjustment calculation. The patentee must also include the information required by 37 CFR 1.705(b)(2) and the fee required by 37 CFR 1.18(e). If patentee does not file a timely request for reconsideration of this patent term adjustment calculation including the information required by 37 CFR 1.705(b)(2) and the fee required by 37 CFR 1.18(e), the USPTO will issue a certificate of correction reflecting the PTA determination noted above.

Patentee should be aware that in order to preserve the right to review in the United States District Court for the District of Columbia of the USPTO patent term adjustment determination, patentee must ensure that he or she also take the steps required under 35 U.S.C. 154(b)(4)(A) in a timely manner. Nothing in the request for recalculation should be construed as providing an alternative time frame for commencing a civil action under 35 U.S.C. 154(b)(4)(A).

Any questions concerning this decision should be directed to the Office of Patent Legal Administration at 571-272-7702.

UNITED STATES PATENT AND TRADEMARK OFFICE

COMMISSIONER FOR PATENTS
UNITED STATES PATENT AND TRADEMARK OFFICE
P.O. BOX 1450
ALEXANDRIA, VA 22313-1450
www.uspto.gov

Paper No.

QUARLES & BRADY LLP
411 E. WISCONSIN AVENUE
SUITE 2040
MILWAUKEE WI 53202-4497

COPY MAILED
JUL 25 2006
OFFICE OF PETITIONS

In re Patent No. 7,055,471	:	
Chittenden	:	LETTER REGARDING
Issue Date: June 6, 2006	:	PATENT TERM ADJUSTMENT
Application No. 10/157,250	:	
Filed: May 28, 2002	:	
Atty Docket No. 550270.91006	:	

This is in response to the "STATUS INQUIRY AND REQUEST FOR PATENT TERM ADJUSTMENT," filed April 4, 2005.

The request is **DISMISSED**.

Prior to issuance of the patent, applicants filed the instant status inquiry and request for patent term adjustment due to the "excessive delay" in issuing the patent after payment of the issue fee and publication fee. Applicants are advised that § 1.705(d) provides the avenue before the Office for requesting reconsideration of the revised patent term adjustment indicated in the patent. See § 1.702-1.705. Moreover, pursuant to § 1.705(b), this section requires payment of:

> (1) The fee set forth in § 1.18(e) ...

Neither the fee under § 1.18(e) nor a general authorization to charge any required fees, accompanied the request. Accordingly, the request is dismissed for failure to comply with the requirement of paragraph (b)(1) to submit the fee under § 1.18(e). The request is treated as a status inquiry.

Since filing of this paper, the patent issued on June 6, 2006, with a revised patent term adjustment of 304 days, including 495

days for Office delay in issuing the patent after payment of the issue fee.

Patentees are reminded that any request for reconsideration of the patent term adjustment indicated in the patent must be filed within two months of the date the patent issued and must comply with the requirements of paragraphs (b)(1) and (b)(2) of this section. Any request for reconsideration under this section that raises issues that were raised, or could have been raised, in an application for patent term adjustment under paragraph (b) of this section shall be dismissed as untimely as to those issues. See § 1.705(d). In this instance, the two-month period continues to run until August 6, 2006.

Telephone inquiries specific to this matter should be directed to the undersigned at (571) 272-3219.

Nancy Johnson
Senior Petitions Attorney
Office of Petitions

UNITED STATES PATENT AND TRADEMARK OFFICE

UNITED STATES DEPARTMENT OF COMMERCE
United States Patent and Trademark Office
Address: COMMISSIONER FOR PATENTS
P.O. Box 1450
Alexandria, Virginia 22313-1450
www.uspto.gov

IBM CORPORATION
IPLAW SHCB/40-3
1701 NORTH STREET
ENDICOTT, NY 13760

Mail Date: 04/20/2010

Applicant	: James R. Wason	: DECISION ON REQUEST FOR
Patent Number	: 7613994	: RECALCULATION of PATENT
Issue Date	: 11/03/2009	: TERM ADJUSTMENT IN VIEW
Appliction No	: 10/157,263	: OF WYETH AND NOTICE OF INTENT TO
Filed	: 05/29/2002	: ISSUE CERTIFICATE OF CORRECTION
		:

The Request for Recalculation is **GRANTED** to the extent indicated.

The patent term adjustment has been determined to be **999** days. The USPTO will *sua sponte* issue a certificate of correction reflecting the amount of PTA days determined by the recalculation.

Prior to the issuance of the certificate of correction, the USPTO will afford patentee an opportunity to be heard and request reconsideration. Accordingly, patentee has **one month or thirty (30) days**, whichever is longer, to file a request for reconsideration of this patent term adjustment calculation. See 35 U.S.C. 154(b)(3)(B)(ii) and 37 CFR 1.322(a)(4). No extensions of time will be granted under 37 CFR 1.136.

Patentee should use document code PET.OP if electronically filing a request for reconsideration of this patent term adjustment calculation. The patentee must also include the information required by 37 CFR 1.705(b)(2) and the fee required by 37 CFR 1.18(e). If patentee does not file a timely request for reconsideration of this patent term adjustment calculation including the information required by 37 CFR 1.705(b)(2) and the fee required by 37 CFR 1.18(e), the USPTO will issue a certificate of correction reflecting the PTA determination noted above.

Patentee should be aware that in order to preserve the right to review in the United States District Court for the District of Columbia of the USPTO patent term adjustment determination, patentee must ensure that he or she also take the steps required under 35 U.S.C. 154(b)(4)(A) in a timely manner. Nothing in the request for recalculation should be construed as providing an alternative time frame for commencing a civil action under 35 U.S.C. 154(b)(4)(A).

Any questions concerning this decision should be directed to the Office of Patent Legal Administration at 571-272-7702.

UNITED STATES PATENT AND TRADEMARK OFFICE

UNITED STATES DEPARTMENT OF COMMERCE
United States Patent and Trademark Office
Address: COMMISSIONER FOR PATENTS
P.O. Box 1450
Alexandria, Virginia 22313-1450
www.uspto.gov

IBM CORPORATION
IPLAW SHCB/40-3
1701 NORTH STREET
ENDICOTT, NY 13760

Mail Date: 05/17/2010

Applicant : James R. Wason
Patent Number : 7613994
Issue Date : 11/03/2009
Application No : 10/157,263
Filed : 05/29/2002

: NOTICE CONCERNING IMPROPER
: CALCULATION OF PATENT TERM
: ADJUSTMENT BASED UPON USPTO
: IMPROPERLY MEASURING REDUCTION
: PERIOD UNDER 37 CFR 1.704(c)(10).

The United States Patent and Trademark Office (USPTO) discovered that in processing the recent recalculation decisions mailed in response to patentee's filed Request for Recalculation of Patent Term Adjustment in view of Wyeth, the USPTO improperly measured the reduction period for reductions under 37 CFR 1.704(c)(10). Pursuant to 37 CFR 1.704(c)(10), patentee's reduction begins on the date of filing the amendment under 37 CFR 1.312 ("1.312 amendment") or other related paper and ends on the date that the Office mails a response to the filing of the 1.312 amendment or other paper. It has been discovered that during the recalculation, the calculation failed to the limit the reduction to the mail date of the response to the 1.312 amendment or other paper. Accordingly, patentee's reductions were greater than warranted.

This notice **VACATES** the previous GRANTED request for recalculation and provides patentee with a revised GRANTED recalculation.

The patent term adjustment has been determined to be **1033** days. The USPTO will *sua sponte* issue a certificate of correction reflecting the amount of patent term adjustment (PTA) days determined by the recalculation.

Prior to the issuance of the certificate of correction, the USPTO will afford patentee an opportunity to be heard and request reconsideration. Accordingly, patentee has **one month or thirty (30) days** from the mail date of this notice, whichever is longer, to file a request for reconsideration of this PTA calculation. See 35 U.S.C. § 154(b)(3)(B)(ii) and 37 CFR 1.322(a)(4).

Patentee should use document code PET.OP if electronically filing a request for reconsideration of this PTA calculation. The patentee must also include the information required by 37 CFR 1.705(b)(2), and the fee required by 37 CFR 1.18(e). If patentee does not file a timely request for reconsideration of this PTA calculation, including the information required by 37 CFR 1.705(b)(2) and the fee required by 37 CFR 1.18(e), the USPTO will issue a certificate of correction reflecting the PTA determination noted above.

Patentee should be aware that in order to preserve the right of review of the USPTO's PTA determination in the United States District Court for the District of Columbia, patentee must ensure that the steps required under 35 U.S.C. § 154 (b)(4) are taken in a timely manner. Nothing in the request for recalculation should be construed as providing an alternative time frame for commencing a civil action under 35 U.S.C. § 154(b)(4).

UNITED STATES PATENT AND TRADEMARK OFFICE

COMMISSIONER FOR PATENTS
UNITED STATES PATENT AND TRADEMARK OFFICE
WASHINGTON, D.C. 20231
www.uspto.gov

Paper No. 04

MAR 5 2003

Norman R. Klivans
SKJERVEN MORRILL MacPHERSON LLP
Suite 700
25 Metro Drive
San Jose CA 95110-1349

In re Application of:	:	
Kwon, *et al.*	:	
Application No. 10/157,272	:	DECISION ON REQUEST TO WITHDRAW FROM RECORD
Filed: May 28, 2002	:	
For: STACKED CHIP PACKAGE HAVING UPPER CHIP PROVIDED WITH TRENCHES AND METHOD OF MANUFACTURING THE SAME	:	

This is a decision on the request to withdraw as attorney of record under 37 C.F.R. § 1.36, filed November 27, 2002.

A grantable request to withdraw as attorney of record must be signed by every attorney seeking to withdraw or contain a clear indication that one attorney is signing on behalf of others. A request to withdraw will not be approved unless at least thirty (30) days would remain between the date of approval and the later of the expiration date of a time to file a response or the expiration date of the maximum time period that can be extended under 37 C.F.R. § 1.136(a).

The request meets all the above requirements. The request was signed by Norman R. Klivans, an attorney of record in the above identified application and there is no outstanding Office action requiring a response by the applicant.

The request is approved.

The application currently has no attorney of record.

All future communications from the Office will be directed to John Castellano, at the below-listed address until otherwise notified by applicant.

Inquiries related to this decision should be directed to Lissi Mojica Marquis at (703) 308-2260.

Lissi Mojica Marquis, Special Programs Examiner
Technology Center 2800
Semiconductors, Electrical and Optical
Systems and Components

cc: Mr. John Castellano
Harness, Dickey & Pierce
12355 Sunrise Valley Drive, Suite 350
Reston, VA 20191

UNITED STATES PATENT AND TRADEMARK OFFICE

Commissioner for Patents
United States Patent and Trademark Office
P.O. Box 1450
Alexandria, VA 22313-1450
www.uspto.gov

ROSS PRODUCTS DIVISION OF ABBOTT LABORATORIES
DEPARTMENT 108140-DS/1
625 CLEVELAND AVENUE
COLUMBUS OH 43215-1724

COPY MAILED

AUG 01 2007

OFFICE OF PETITIONS

In re Application of	:	
Bryan W. Wolfe, et al.	:	
Application No. 10/157,296	:	DECISION ON PETITION
Filed: May 29, 2002	:	
Attorney Docket No. 6809.US.P2	:	

This is a decision on the petition under the unintentional provisions of 37 CFR 1.137(b), filed March 9, 2007, to revive the above-identified application.

The petition is **GRANTED**.

This application became abandoned as a result of petitioner's failure to file an appeal brief (and fee required by 37 CFR 41.20(b)(2)) within the time period provided in 37 CFR 41.37(a)(1). As an appeal brief (and appeal brief fee) was not filed within two (2) months of the Notice of Appeal filed May 30, 2006. No extensions of time under the provisions of 37 CFR 1.136(a) were obtained, the appeal was dismissed and the proceedings as to the rejected claims were terminated. See 37 CFR 1.197(b). As no claim was allowed, the application became abandoned on January 31, 2007. See MPEP 1215.04.

The petition satisfies the requirements of 37 CFR 1.137(b) in that petitioner has supplied (1) the reply in the form of a RCE with fee and a proper submission, (2) the petition fee of $1500; and (3) a proper statement of unintentional delay.

The Associate Power of Attorney filed with the petition on March 19, 2007, was filed after June 25, 2004, the effective date of a rule change eliminating the Associate Power of Attorney practice (37 CFR 1.34(b) was eliminated). See MPEP § 402.02 and Revision of Power of Attorney and Assignment Practice, 69 Fed. Reg. 29865 (May 26, 2004); 1283 Off. Gaz. 148 (June 22, 2004). Although the paper has been placed in the file, the names of the patent practitioners listed on the Associate Power of Attorney have not been made of record. However, as requested, and since the Associate Power of Attorney was signed by an attorney of record, the correspondence address has been changed to the address noted in the document.

Telephone inquiries concerning this decision should be directed to April Wise at (571) 272-1642.

This application is being referred to Technology Center AU 1623 for appropriate action by the Examiner in the normal course of business on the reply received March 9, 2007.

Irvin Dingle
Petitions Examiner
Office of Petitions

UNITED STATES PATENT AND TRADEMARK OFFICE

COMMISSIONER FOR PATENTS
UNITED STATES PATENT AND TRADEMARK OFFICE
WASHINGTON, D.C. 20231
www.uspto.gov

Paper No. 4

David W. Heid
SKJERVEN MORRILL LLP
25 Metro Drive, Suite 700
San Jose, CA 95110-1349

APR 3 2003

In re Application of	)	
Ill Heung Choi.	)	
Application No.10/157,361,270	)	
Filed: May 28, 2002	)	
For: SEMICONDUCTOR PACKAGE WITH SEMICONDUCTOR CHIPS STACKED THEREIN AND METHOD OF THE PACKAGE	)	DECISION ON PETITION

This is a decision on the request to withdraw as attorney of record under 37 C.F.R. § 1.36, filed November 29, 2002.

A grantable request to withdraw as attorney of record should indicate thereon the present mailing addresses of the attorney(s) who is/are withdrawing from the record and of the applicant. The request for withdrawal must be signed by every attorney seeking to withdraw or contain a clear indication that one attorney is signing on behalf of another/others. A request to withdraw will not be approved unless at least 30 (thirty) days would remain between the date of approval and the later of the expiration date of a time to file a response or the expiration date of the maximum time period which can be extended under 37 C.F.R. § 1.136(a).

The request was signed by Norman R. Klivans on behalf of all attorneys of record, Customer No. 24251. The request indicates that the withdrawal is also on behalf of Customer No. 27869. There was no appointment of attorneys associated with Customer No. 27869 in the record. Accordingly, the request is approved for Customer No. 2451 only.

The request is APPROVED.

The correspondence address of record has been changed and the new correspondence address is the address indicated below. This decision results in the application having no attorney of record.

All future communications from the Office will be directed to the below-listed address until otherwise notified by applicant.

Hien H. Phan, Special Program Examiner
Technology Center 2800
Semiconductors, Electrical and Optical
Systems and Components

cc. John Castellano
HARNESS, DICKEY & PIERCE
12355 Sunrise Valley Drive, Suite 350
Reston, VA 20191

UNITED STATES PATENT AND TRADEMARK OFFICE

Commissioner for Patents
United States Patent and Trademark Office
Washington, D.C. 20231
www.uspto.gov

Paper No. 5

Dike, Bronstein, Roberts & Cushman
Intellectual Property Practice Group
Edwards & Angell, LLP
P. O. Box 9169
Boston MA 02209

COPY MAILED

FEB 04 2003

OFFICE OF PETITIONS

In re Application of Kaiser et al. Application No. 10/157,381 Filed: May 29, 2002 Attorney Docket No.2697/56,878 For: DEVICES FOR AND METHODS OF CASTING AND BONDING A MOLTEN MATERIAL ONTO ONE OR MORE SURFACES OF A MOVING SUBSTRATE	DECISION GRANTING PETITION UNDER 37 CFR 1.47(a)

This is in response to the petition under 37 CFR 1.47(a), filed September 16, 2002 (certificate of mailing September 10, 2002).

The petition is granted.

Petitioner showed that Joseph P. Mennucci, the non-signing inventor, has refused to join in the filing of the above-identified application after having been presented with the application papers. Specifically, the Declaration of Facts of George W. Hartnell, III, established that on three separate occasions the non-signing inventor was mailed a letter containing copies of the specification, Declaration and Assignment for his signature. As of the date of the present petition, Mr. Mennucci did not respond to any of the three letters.

The above-identified application and papers have been reviewed and found in compliance with 37 CFR 1.47(a). This application is hereby accorded Rule 1.47(a) status. As provided in Rule 1.47(c), this Office will forward notice of this application's filing to the non-signing inventor at the address given in the present petition Notice of the filing of this application will be published in the Official Gazette.

The application file is being returned to the Office of Initial Patent Examination for further processing.

Telephone inquiries regarding this decision should be directed to the undersigned at (703) 306-5589.

Christina Tartera Donnell

Christina Tartera Donnell
Senior Petitions Attorney
Office of Petitions

UNITED STATES PATENT AND TRADEMARK OFFICE

Commissioner for Patents
United States Patent and Trademark Office
P.O. Box 1450
Alexandria, VA 22313-1450
www.uspto.gov

BEYER WEAVER & THOMAS, LLP
P.O. BOX 70250
OAKLAND, CA 94612-0250

COPY MAILED

SEP 14 2005

OFFICE OF PETITIONS

In re Application of :
David B. Glasco :
Application No. 10/157,388 : ON PETITION
Filed: May 28, 2002 :
Attorney Docket No. NWISP009

This is a decision on the petition, filed September 13, 2005 under 37 CFR 1.313(c)(2) to withdraw the above-identified application from issue after payment of the issue fee.

The petition is **GRANTED**.

The above-identified application is withdrawn from issue for consideration of a submission under 37 CFR 1.114 (request for continued examination). See 37 CFR 1.313(c)(2).

Petitioner is advised that the issue fee paid on August 11, 2005 in the above-identified application cannot be refunded. If, however, the above-identified application is again allowed, petitioner may request that it be applied towards the issue fee required by the new Notice of Allowance.[1]

Telephone inquiries should be directed to Irvin Dingle at (571) 272-3210.

This matter is being referred to Technology Center AU 2189 for processing of the request for continued examination under 37 CFR 1.114 and for consideration of the concurrently filed Information Disclosure Statement.

Irvin Dingle
Petitions Examiner
Office of Petitions

[1] The request to apply the issue fee to the new Notice may be satisfied by completing and returning the new Issue Fee Transmittal Form PTOL-85(b), which includes the following language thereon: Commissioner for Patents is requested to apply the Issue Fee and Publication Fee (if any) or re-apply any previously paid issue fee to the application identified above. Petitioner is advised that, whether a fee is indicated as being due or not, the Issue Fee Transmittal Form **must** be completed and timely submitted to avoid abandonment. Note the language in bold text on the first page of the Notice of Allowance and Fee(s) Due (PTOL-85).

UNITED STATES PATENT AND TRADEMARK OFFICE

UNDER SECRETARY OF COMMERCE FOR INTELLECTUAL PROPERTY AND
DIRECTOR OF THE UNITED STATES PATENT AND TRADEMARK OFFICE
WASHINGTON, DC 20231
www.uspto.gov

MAILED

MAY 30 2003

DIRECTOR'S OFFICE
TECHNOLOGY CENTER 3600

Paper No. 3

Harrity & Snyder, L.L.P.
Suite 300
11240 Waples Mill Road
Fairfax, VA 22030

In re application of
Kahre et al.
Application No.10/157,394
Filed: May 30, 2002
For: VEHICLE-MOUNTED MOBILE ADJUSTABLE RAMP SYSTEM

DECISION ON PETITION TO MAKE SPECIAL (COUNTER TERRORISM)

This is in response to the petition filed on May 20, 2003 to make the above-identified application special on the basis of inventions for countering terrorism as set forth in MPEP § 708.02 XI.

The petition is **DISMISSED**.

The requirements for granting special status under this section are: (A) a petition to make special accompanied by the fee set forth in 37 CFR 1.17(i); and (B) a statement explaining how the invention contributes to countering terrorism.

Applicant's petition explains that the invention "enables and facilitates the rapid deployment of counter-terrorism forces to, for example, the fuselage of a parked airplane or a second/third story window of a building". It is this alleged rapid and precise access may increase the effectiveness to counter-terrorism forces in neutralizing terrorists so that the applicant feels allows this application to be made special. This argument is not agreed with. Nothing in the invention acts to directly counter terrorism, but any counter terrorism aspect of Applicant's invention would appear to be a function peripheral to that of the broader functioning mobile, mounted, adjustable ramping device. The logic used by the applicant could also make an improved ladder a "means for countering terrorism". MPEP § 708.02 XI lists examples of types of inventions that would qualify as countering terrorism. While a grantable petition is not limited to these examples, these examples all clearly act to directly counter terrorism. Clearly the intent of the examples is that any such invention must directly counter terrorism. Thus, the indirect tie to countering terrorism as argued by the applicant is not seen as being sufficient to accord special status to this application.

Any request for reconsideration must be filed within TWO MONTHS of the date of this decision. Extensions of time under 37 CFR 1.136(a) are permitted. Should petitioner desire reconsideration, he should supplement this petition by a declaration or statement giving the information as outlined above. Petitioner should promptly submit such a renewed petition to the Commissioner of Patents and Trademarks, Washington, D.C. 20231. The envelope should indicate that the correspondence be brought to the attention of Technology Center 3600.

Until any such renewed petition is submitted, the application will be returned to the examiner's docket to await treatment on the merits in the normal order of examination.

Steven N. Meyers
Special Programs Examiner
Technology Center 3600
(703) 308-3868

SNM/dxn: 5/28/03

UNITED STATES PATENT AND TRADEMARK OFFICE

COMMISSIONER FOR PATENTS
UNITED STATES PATENT AND TRADEMARK OFFICE
WASHINGTON, D.C. 20231
www.uspto.gov

Paper No. 6

COPY MAILED

APR 1 7 2003

OFFICE OF PETITIONS

Mathews, Collins, Shepherd & McKay, P.A.
Suite 306
100 Thanet Circle
Princeton, NJ 08540

In re Application of
Cohen et al.
Application No.10/157,401
Filed: May 29, 2002
Attorney Docket Number: 4733-106.1 US

DECISION REFUSING STATUS
UNDER 37 CFR 1.47(a)

This is in response to the petition under 37 CFR §1.47(a), filed December 12, 2002.

The petition is **dismissed**.

Rule 47 applicant is given TWO (2) MONTHS from the mailing date of this decision to reply, correcting the below-noted deficiencies. Any reply should be entitled "Request for Reconsideration of Petition Under 37 CFR §1.47(a)," and should address the deficiencies noted below, except that the reply may include an oath or declaration executed by the non-signing inventors. Failure to respond will result in abandonment of the application. Any extensions of time will be governed by 37 CFR §1.136(a).

The above-identified application was filed on May 29, 2002, without an executed oath or declaration. Accordingly, on June 27, 2002, applicant was mailed a "Notice to File Missing Parts of Nonprovisional Application - Filing Date Granted," requiring for the purposes of this decision an executed oath or declaration in compliance with §1.63, and a surcharge for its late filing. This Notice set an extendable two-month period for reply of August 27, 2002.

In reply, applicant filed a petition, the surcharge for late filing of the declaration, and a partially executed declaration. To make timely a four month request for extension of time was submitted.

A grantable petition under 37 CFR §1.47(a) requires: (1) proof that the non-signing inventor cannot be reached or refuses to sign the oath or declaration after having been presented with the application papers (specification, claims and drawings); (2) an acceptable oath or declaration in compliance with 35 U.S.C. §§ 115 and 116 ; (3) the petition fee; and, (4) a statement of the last known address of the non-signing inventor. Applicant lacks item (1) as set forth above.

As to item (1), it is not clear in the documents presented whether Rule 47 applicant maintains inventor Cohen can not be reached or that Cohen refuses to sign the oath or declaration. If it is applicants' contention Cohen cannot be reached, applicant must demonstrate diligent efforts were made to find or reach non-signing inventor. See MPEP 409.03(d). Petitioner indicates attempts to contact inventor Cohen at his last known e-mail address, home address by Federal Express and U.S. Postal mail, and through the University of Pennsylvania's Alumni Association were unsuccessful. However rule 47 applicant has failed to provide any copies of documentary evidence that support a finding that the non-signing inventor could not be found or reached. Furthermore, specific facts need to be presented to establish diligent efforts. What happened when

the attempts to contact inventor Cohen were made? What was sent via Federal Express and the U.S. Postal Service? Was there a successful delivery? Did the correspondence sent via e-mail return to sender or did recipient fail to respond Did rule 47 applicant conduct an electronic search for non-signing inventor?

Applicant should present copies of documentary evidence that support a finding that the non-signing inventor could not be found or reached and the steps taken to locate the non-signing inventor. If applicant provides sufficient evidence that diligent effort has been made to locate the inventor and inventor can not be located, 47 applicant is not required to send a copy of the application. Rule 47 applicant failed to show or provide sufficient proof the inventor can not be reached.

To the extent applicant desires to make the case that the non-signing inventor refuses to execute the oath or declaration, applicant will need to establish a copy of the **entire** application package (including specification, claims and drawings) was presented to the non-signing inventor and he refused to sign. If it can be established that the application papers were delivered to the last known address of inventor Cohen and there has been no response to the application papers, this may be construed as a refusal by the inventor to execute the application papers. However, rule 47 applicant must give the non-signing inventor an opportunity to sign the oath or declaration by sending the application papers to the last known address of the inventor. If applicant is aware the non-signing inventor can not be reached at the address provided on the declaration, applicant should make a showing that diligent effort has been made to locate the inventor.

Further correspondence with respect to this matter should be addressed as follows:

By mail: Commissioner for Patents
Box DAC
Washington, D.C. 20231

By FAX: (703) 308-6916
Attn: Office of Petitions

By hand: Crystal Plaza Four, Suite 3C23
2201 S. Clark Place
Arlington, VA 22202

Telephone inquiries related to this decision may be directed to the undersigned at (703) 306-0251.

Charlema R. Grant

Charlema R. Grant
Petitions Attorney
Office of Petitions

UNITED STATES PATENT AND TRADEMARK OFFICE

COMMISSIONER FOR PATENTS
UNITED STATES PATENT AND TRADEMARK OFFICE
P.O. BOX 1450
ALEXANDRIA, VA 22313-1450
www.uspto.gov

Paper No. 9

COPY MAILED

AUG 0 8 2003

OFFICE OF PETITIONS

Mathews, Collins, Shepherd & McKay, P.A.
Suite 306
100 Thanet Circle
Princeton, NJ 08540

In re Application of
Cohen et al.
Application No.10/157,401
Filed: May 29, 2002
Attorney Docket Number: 4733-106.1 US

DECISION REFUSING STATUS
UNDER 37 CFR 1.47(a)

This is in response to the renewed petition under 37 CFR §1.47(a), filed June 19, 2003 (certificate of mailing June 16, 2003).

The petition is **dismissed**.

Rule 47 applicant is given TWO (2) MONTHS from the mailing date of this decision to reply, correcting the below-noted deficiencies. Any reply should be entitled "Request for Reconsideration of Petition Under 37 CFR §1.47(a)," and should address the deficiencies noted below, except that the reply may include an oath or declaration executed by the non-signing inventors. Failure to respond will result in abandonment of the application. Any extensions of time will be governed by 37 CFR §1.136(a).

The above-identified application was filed on May 29, 2002, without an executed oath or declaration. Accordingly, on June 27, 2002, applicant was mailed a "Notice to File Missing Parts of Nonprovisional Application - Filing Date Granted," requiring for the purposes of this decision an executed oath or declaration in compliance with §1.63, and a surcharge for its late filing. This Notice set an extendable two-month period for reply of August 27, 2002.

In reply, applicant filed a petition, the surcharge for late filing of the declaration, and a partially executed declaration. To make timely a four month request for extension of time was submitted. A petition under 37 CFR 1.47 was dismissed on April 17, 2003

A grantable petition under 37 CFR §1.47(a) requires: (1) proof that the non-signing inventor cannot be reached or refuses to sign the oath or declaration after having been presented with the application papers (specification, claims and drawings); (2) an acceptable oath or declaration in compliance with 35 U.S.C. §§ 115 and 116 ; (3) the petition fee; and, (4) a statement of the last known address of the non-signing inventor. Applicant lacks item (2) as set forth above.

As to item (2), an oath or declaration under 37 CFR 1.63 must be presented by each actual inventor. While each inventor need not execute the same oath or declaration, each oath or declaration executed by an inventor must contain a complete listing of all inventors so as to clearly indicate what each inventor believes to be the appropriate inventive entity. Where individual declarations are executed, they must be submitted as individual declarations rather than combined into one declaration. See MPEP 201.03. The declaration executed by Jeremy Cohen is defective because it does not list the entire inventive entity

and the declaration provided is for use in conjunction with an application data sheet (See 37 CFR 1.76). A review of the Office file does not show an application data sheet was previously filed or has been submitted with the renewed petition.

On renewed petition, a declaration executed by Jeremy Cohen which list the entire inventive entity should be submitted. In addition, if petitioner uses PTO/SB/01a (Declaration and Power of Attorney For Utility or Design Application Using an Application Data Sheet) an application data sheet needs to be submitted.

Lastly, there is no indication that Petitioner herein was ever empowered to prosecute the instant application. If Petitioner desires to receive future correspondence regarding this application, the appropriate power of attorney documentation and change of correspondence address must be submitted. A courtesy copy of this decision will be mailed to Petitioner. However, all future correspondence will be directed to the address of record until such time as appropriate instructions are received to the contrary.

Further correspondence with respect to this matter should be addressed as follows:

By mail:	Mail Stop Petition Commissioner for Patents P.O. Box 1450 Alexandria, VA 22313-1450
By facsimile:	(703) 308-6916
By hand:	Office of Petitions 2201 South Clark Place Crystal Plaza 4, Suite 3C23 Arlington, VA 22202
By delivery service: (FedEx, UPS, DHL, etc.)	U.S. Patent and Trademark Office 2011 South Clark Place Customer Window, Mail Stop Petition Crystal Plaza Two, Lobby, Room 1B03 Arlington, VA 22202

Telephone inquiries related to this decision may be directed to the undersigned at (703) 306-0251.

Charlema R. Grant

Charlema R. Grant
Petitions Attorney
Office of Petitions

cc: Marina E. Volin
Caesar, Rivise, Bernstein,
Cohen & Pokotilow, LTD.
1635 MARKET STREET, 12TH FLOOR
PHILADELPHIA, PA 19103

UNITED STATES PATENT AND TRADEMARK OFFICE

COMMISSIONER FOR PATENTS
UNITED STATES PATENT AND TRADEMARK OFFICE
P.O. BOX 1450
ALEXANDRIA, VA 22313-1450
www.uspto.gov

Paper No. 13

CAESAR, RIVISE, BERNSTEIN,
COHEN & POKOTILOW, LTD.
12TH FLOOR, SEVEN PENN CENTER
1635 MARKET STREET
PHILADELPHIA, PA 19103-2212

COPY MAILED

SEP 02 2003

OFFICE OF PETITIONS

In re Application of
Jeremy Mark Cohen, Luis Otoya, Kristy Bittenbender Arbogast and Flaua Koplin Winston
Application No.10/157,401
Filed: May 29, 2002
Attorney Docket Number: T1118/20041
Title of Invention: RETROFIT SAFETY HANDLEBAR

ON RENEWED PETITION

This is in response to the renewed petition under 37 CFR 1.47(a), filed August 22, 2003.

In view of the joinder of the inventor, further consideration under 37 CFR 1.47(a) is not necessary and the petition is considered to be moot. This application does not have any Rule 1.47(a) status and no such status should appear on the file wrapper. This application need not be returned to this Office for further consideration under 37 CFR 1.47(a).

The Revocation of Power of Attorney and Appointment of New Power of Attorney submitted on August 4, 2003 has been entered and made of record.

This application will be forwarded to the Office of Initial Patent Examination for further processing.

Telephone inquiries related to this decision may be directed to the undersigned at (703) 306-0251.

Charlema R. Grant
Petitions Attorney
Office of Petitions

UNITED STATES PATENT AND TRADEMARK OFFICE

COMMISSIONER FOR PATENTS
UNITED STATES PATENT AND TRADEMARK OFFICE
P.O. BOX 1450
ALEXANDRIA, VA 22313-1450
www.uspto.gov

BRINKS HOFER GILSON & LIONE
P.O. BOX 10395
CHICAGO, IL 60610

COPY MAILED

SEP 2 2 2005

OFFICE OF PETITIONS

In re Patent No. 6,927,805	:	
Issued: August 9, 2005	:	
Application No. 10/157,405	:	PATENT TERM ADJUSTMENT
Filed: May 29, 2002	:	
Dkt. No.: 9281/4336	:	

This is a decision on the "PETITION FOR RECONSIDERATION OF THE PATENT TERM ADJUSTMENT," filed August 22, 2005. The matter is being treated under 37 CFR 1.705(d) as an application for patent term adjustment (PTA).

The application for PTA under 37 C.F.R. § 1.705(d) is **GRANTED TO THE EXTENT INDICATED HEREIN**.

The instant application matured into U.S. Pat. No. 6,927,805 on August 9, 2005. The patent issued with an adjustment of 532 days. The instant application for patent term adjustment was timely filed. Applicant argues that the patent is entitled to an additional adjustment of 72 days under the provisions of 37 CFR 1.703(b). Applicant further argues that the adjustment was improperly reduced 49 days relative to drawings.

A review of the application history reveals that in accordance with 37 C.F.R. §§ 1.702(a)(1) and 1.703(a)(1), an adjustment of 581 days can be attributed to the Office for failure to mail at least one of a notification under 35 U.S.C. 132 or a notice of allowance under 35 U.S.C. 151 not later than 14 months after the date on which the application was filed.

The Office errantly reduced the adjustment of 581 days 49 days in connection with drawings that were submitted with the application on May 29, 2002. A review of the application history does not indicate that applicant, subsequent to the mailing of Notice of Allowance, submitted formal drawings. Accordingly, there was not failure to engage in reasonable efforts to conclude prosecution (or processing) within the meaning of 37 C.F.R. § 1.704(c)(10) in connection with the drawing.

Applicant further argues that the patent is entitled to an additional adjustment of 72 days in accordance with 37 C.F.R. § 1.704(b) for the Office's failure to issue the patent within three years from the date upon which the application was filed.

Applicants are correct in that the Office did not issue the patent within 3 years of its filing date of May 29, 2002. Specifically, the patent issued on August 9, 2005, three years and 75 days after its filing date. Thus, the period of delay under 35 USC 154(b)(1)(B) and 37 CFR 1.702(b) is 72 days. *See*, 37 C.F.R. § 1.703(b).

However, if an application is entitled to an adjustment under 35 U.S.C. 154(b)(1)(B) and 37 C.F.R. §1.702(b), the entire period during which the application was pending before the Office (except for periods excluded under 35 U.S.C. 154(b)(1)(B)(i)-(iii)), and not just the period beginning three years after the actual filing date of the application, is the period of delay under 35 U.S.C. 154(b)(1)(B) in determining whether periods of delay overlap under 35 U.S.C. 154(b)(2)(A). Thus, any days of delay for Office issuance of the patent more than 3 years after the filing date of the application which overlap with the days of patent term adjustment accorded prior to the issuance of the patent will not result in any additional patent term adjustment. *See*, 35 U.S.C. 154(b)(1)(B), 35 U.S.C. 154(b)(2)(A), and 37 C.F.R. § 1.703(f). *See*, also *Revision of Patent Term Extension and Patent Term Adjustment Provisions; Final Rule*, 69 Fed. Reg. 21704 (April 22, 2004). In this instance, the periods of delay totaling 581 days attributable to grounds specified in § 1.702(a)(1) and § 1.702(a)(2) overlap with the 72 days attributable to the delay in the issuance of the patent. Thus, the period of adjustment cannot exceed the actual number of days of delay of 581 days.

In view thereof, at the time of issuance, the patent was entitled to an adjustment of 581 days.

Any request for reconsideration of this decision must be submitted within 30 days. The time period for reconsideration may not be extended pursuant to 37 CFR 1.136.

The Office acknowledges receipt of the required fee of $200.00 for an application for patent term adjustment.

This application file will be forwarded to the Certificate of Corrections branch for issuance of a certificate of correction

to indicate that the term of this patent is extended or adjusted under 35 U.S.C. 154(b) by 581 days.

Telephone inquiries specific to this matter may be directed to Petitions Attorney Alesia M. Brown at (571) 272-3202.

Kery Fries

Kery Fries
Senior Legal Advisor
Office of Patent Legal Administration
Office of Deputy Commissioner
for Patent Examination Policy

Enclosure: Draft Certificate of Correction

UNITED STATES PATENT AND TRADEMARK OFFICE

UNDER SECRETARY OF COMMERCE FOR INTELLECTUAL PROPERTY AND
DIRECTOR OF THE UNITED STATES PATENT AND TRADEMARK OFFICE
WASHINGTON, DC 20231
www.uspto.gov

Dickstein, Shapiro, Morin & Oshinsky, LLP
1177 Avenue of the Americas
41st Floor
New York, NY 10036-2714

MAILED

MAR 21 2003

DIRECTOR'S OFFICE
TECHNOLOGY CENTER 3600

Paper No. 10

In re application of
Matthew P. Rosedale
Application No. 10/157,439
Filed: May 30, 2002
For: SYSTEM AND METHOD FOR TRADE SETTLEMENT TRACKING AND RELATIVE RANKING

DECISION ON PETITION TO MAKE SPECIAL (ACCELERATED EXAMINATION)

This is in response to the petition filed on December 31, 2002, and supplemented on January 13, 2003, to make the above-identified application special on the basis of special examining procedure for certain new applications - accelerated examination as set forth in MPEP § 708.02 VIII.

The requirements for granting special status under this section are: (A) a petition to make special accompanied by the fee set forth in 37 CFR 1.17(i); (B) all claims being directed to a single invention, or an election without traverse if the Office determines that all the claims are not directed to a single invention; (C) a statement that a pre-examination search was made listing the field of search; (D) one copy of each of the references deemed most closely related to the subject matter encompassed by the claims if said references are not already of record; and (E) a detailed discussion of how the claimed subject matter is patentable over the references.

Since all of the requirements for special status under MPEP § 708.02 VIII have been met, the petition is **GRANTED**.

The examiner is directed (1) to make an interference search for possible interfering applications, (2) to promptly examine this application out of turn, and (3) if any interfering application is discovered, to examine such application simultaneously and state in the first official letter of such application that it is being taken out of turn because of a possible interference.

Petitioner is advised that this application will continue to be special, throughout its entire prosecution and pendency, including interference or appeal, if any, only if petitioner makes a prompt ***bona fide*** effort, in response to each Office action, to place the application in condition for allowance, even if it is necessary to conduct an interview with the examiner to accomplish this purpose.

SUMMARY: Petition to Make Special **GRANTED**.

Randolph A. Reese
Special Programs Examiner
Technology Center 3600
(703) 308-2121
(703) 605-0586 (facsimile)

RAR/tpl: 3/20/03

UNITED STATES PATENT AND TRADEMARK OFFICE

Commissioner for Patents
United States Patent and Trademark Office
P.O. Box 1450
Alexandria, VA 22313-1450
www.uspto.gov

Paper No. 102504

SCHNADER HARRISON SEGAL & LEWIS, LLP
1600 MARKET STREET, SUITE 3600
PHILADELPHIA, PA 19103

FEB - 7 2005

In re Application of:	:	
HELMUT LAIG-HORSTEBROCK et al.	:	
Serial No.: 10/157,508	:	DECISION ON REQUEST TO WITHDRAW FROM RECORD
Filed: May 29, 2002	:	
Attorney Docket No.: **1144-02**	:	

This is a decision on the request to withdraw as attorney/agent of record under 37 C.F.R. § 1.36, filed September 27, 2004.

A grantable request to withdraw as attorney of record must be signed by every attorney seeking to withdraw or contain a clear indication that one attorney is signing on behalf of others. A request to withdraw will not be approved unless at least thirty (30) days would remain between the date of approval and the later of the expiration date of a time to file a response or the expiration date of the maximum time period, which can be extended under 37 C.F.R. § 1.136(a).

The request meets all the above stated requirements. The request was signed by John T. Kluger, on behalf of himself and all the attorneys/agents of record.

The request is **APPROVED**.

All future communications from the Office will be directed to Foley & Lardner, at the below address, until otherwise notified by applicant.

Inquiries related to this decision should be directed to Jose G. Dees at (571) 272-1569.

Jose G. Dees, Special Programs Examiner
Technology Center 2800
Semiconductors, Electrical and Optical
Systems and Components

cc: FOLEY & LARDNER
777 EAST WISCONSIN AVENUE
SUITE 3800
MILWAUKEE, WI 53202

UNITED STATES PATENT AND TRADEMARK OFFICE

COMMISSIONER FOR PATENTS
UNITED STATES PATENT AND TRADEMARK OFFICE
P.O. BOX 1450
ALEXANDRIA, VA 22313-1450
www.uspto.gov

MCDONNELL BOEHNEN HULBERT & BERGHOFF LLP
300 S. WACKER DRIVE
32ND FLOOR
CHICAGO, IL 60606

COPY MAILED

FEB 21 2006

OFFICE OF PETITIONS

In re Application of	:	
Hong, et al.	:	DECISION ON PETITION
Application No. 10/157,519	:	
Filed: May 29, 2002	:	
Atty. Dkt. No.: MBHM02-393	:	

This decision is in response to the "REQUEST TO RESCIND ABANDONMENT," filed November 10, 2005. This matter is being treated under 37 CFR 1.181 as a petition to withdraw the holding of abandonment.

The petition under 37 CFR 1.181 is hereby **GRANTED**.

This application was held abandoned June 30, 2005, for failure to timely file a proper response to the final Office action mailed March 29, 2005. The final Office action set a three month shortened statutory period for reply. Notice of Abandonment was mailed November 1, 2005.

Petitioner argues that a response to the final Office action was timely submitted June 29, 2005 in accordance with the Certificate of Transmission procedures outlined at 37 CFR 1.8. Petitioner has included a copy of the response to the Office action bearing a certificate of facsimile in accordance with 37 CFR 1.8 along with a copy of a USPTO Auto-Reply Facsimile Transmission acknowledging receipt of a request for continued examination and amendment dated June 29, 2005 as evidence of receipt of the submission.

A review of the application file does not indicate receipt of the response purportedly submitted June 29, 2005, however, the response will be considered timely as it complies with the requirements of 37 CFR 1.8(b) in that (1) the Office was promptly informed of the previous timely mailing, (2) a copy of the previously submitted correspondence with certificate of facsimile thereon has been supplied, and (3) statements attesting to the previous timely mailing have been submitted.

In view of the above, the Notice of Abandonment is hereby VACATED and the Notice of Abandonment is WITHDRAWN.

This application is being forwarded to Technology Center 1600 for further processing.

Telephone inquiries regarding this decision should be directed to the undersigned at (571) 272-3205.

Alesia M. Brown
Petitions Attorney
Office of Petitions

UNITED STATES PATENT AND TRADEMARK OFFICE

Commissioner for Patents
United States Patent and Trademark Office
P.O. Box 1450
Alexandria, VA 22313-1450
www.uspto.gov

gm

Mailed : 7-20-07

In re Application of	:	DECISION
Tueshaus et al.	:	ON
Serial No. 10/157,537	:	PETITION
Filed: May 29, 2002	:	
For: FILTERING SCREEN AND CONSTRUCTION AND METHODS	:	

This is a decision on the June 8, 2007, "Petition to the Commissioner to Invoke Supervisory Authority" requesting that prosecution be closed and the claims allowed to issue, that the examiner's objection to the drawings be withdrawn, and that any fees paid during after the May 31, 2006 Board decision be refunded.

On May 31, 2006, the Board of Patent Appeals and Interferences ("Board") issued a decision which reversed the examiner's rejection of all the pending claims under 35 USC 112, 1st paragraph, the only rejection on appeal. Following the decision, the examiner reopened prosecution with a non-final Office action dated November 3, 2006, which action included various rejections under 35 USC 112, 2nd paragraph and 35 USC 103(a) as well as an objection to the drawings. Applicant replied to this rejection on February 21, 2007, the reply including a request for reconsideration of the reopening, of the drawing objection, and of the rejection. The examiner responded with an action that held applicant's response to be incomplete for failure to correct the drawings.

The instant petition was then timely filed on June 8, 2007 and is before the Director of Technology Center 1700 for consideration.

The petition is **GRANTED-IN-PART AND DENIED-IN-PART** for the reasons below.

DECISION

Reference is made to the petition for applicant's complete arguments, which are briefly summarized herein.

Applicant takes issue with the examiner's reopening of prosecution after the Board's decision. Applicant contends that the examiner had no basis for reopening prosecution, is improperly

arguing matters already adjudicated by the Board, and could have made the present rejections earlier in prosecution but did not.

It is regrettable that the present rejections were not made earlier during prosecution, but this unfortunate circumstance cannot justify the relief sought by applicants, viz., allowance of the application. Substantive patent rights cannot be granted as remedy to real or alleged procedural errors. The examiner cannot knowingly issue unpatentable claims, nor can the examiner disregard references which he believes in good faith render the claims unpatentable, however and whenever those references are discovered. The exception to this principle lies in matters adjudicated by the Board, where the Board has already reversed the examiner's position.

Despite applicant's arguments to the contrary, the present rejections have not been adjudicated by the Board. The only matter adjudicated by the Board was the rejection under 35 USC 112, 1st paragraph. In contrast the present rejections assert that various claims are indefinite, assert that the pending claims are obvious over the combination of US Patent 2,926,785 to Sander and US Patent 2,723,032 to Gisler, and finally assert that the pending claims are obvious over the combination of US Patent 4,749,007 to Malmendier, US Patent 4,815,499 to Johnson, and applicant's alleged admitted prior art. None of these rejections have been previously appealed to the Board, thus their merits have not been adjudicated. That some of the above references may have been of record is irrelevant, as the Board reviews rejections actually on appeal, and does not examine applications de novo. There is simply no presumption that the Board considers claims patentable over grounds of rejection not presented for its review on appeal.

As the issues now raised were never adjudicated by the Board, the examiner is not forestalled from raising them with appropriate supervisory approval, such having been given in the instant case.

Accordingly, applicant's request to close prosecution and allow the claims is necessarily **DENIED**.

Applicant's remarks concerning merits of the above-mentioned rejections have been noted. However, as stated in MPEP 1201, "the line of demarcation between appealable matters for the Board of Patent Appeals and Interferences (Board) and petitionable matters for the Director of the U.S. Patent and Trademark Office (Director) should be carefully observed." The MPEP (1201) explains:

> The United States Patent and Trademark Office (Office) in administering the Patent Laws makes many decisions of a substantive nature which the applicant may feel deny him or her the patent protection to which he or she is entitled. The differences of opinion on such matters can be justly resolved only by prescribing and following judicial procedures. *Where the differences of opinion concern the denial of patent claims because of prior art or other patentability issues, the questions thereby raised are said to relate to the merits*, and appeal procedure within the Office and to the courts has long been provided by statute (35 U.S.C. 134).

> The Board will not ordinarily hear a question that should be decided by the Director on petition, and the Director will not ordinarily entertain a petition where the question presented is matter appealable to the Board

Whether or not the examiner's present rejections have merit is a patentability issue and thus will not be addressed here, the issue being squarely within the purview of the Board.

Applicant also contends that the examiner's requirement to label all the drawings as prior art is improper. The specification clearly describes all the figures as showing that which applicant regards as the invention. "Prior Art" labels are used to indicate that *applicant* considers the drawing to show the prior art, and not that the examiner considers the illustrated device to be unpatentable. The examiner has no reasonable basis to require the drawings to be labeled as prior art, and the examiner's insistence on this issue is notably unhelpful.

Accordingly, applicant's request to withdraw the requirement to label the drawings as prior art is **GRANTED**.

Given the above, the examiner's communication dated April 10, 2007, which held applicant's reply of February 21, 2007 to be non-responsive for failure to correct to the drawings is hereby vacated. The examine will treat the replies of February 21, 2007 and June 8, 2007 on the merits.

With respect to the request for a fee refund, the instant petition was filed under 37 CFR 1.181. No fees are due for this type of petition, such that the fee payment submitted by applicant is considered to have been paid in error and will be refunded. A review of the file indicates that other fee payments were appropriate and no other refund appears to be due.

According, applicant's request for a refund is **GRANTED** to the extent that the fee submitted with the instant petition will be refunded.

In summary, prosecution remains open, the requirement to label the drawings as prior art is withdrawn, the examiner will act upon the merits of the replies filed February 21, 2007 and June 8, 2007, and the fee submitted with the instant petition will be refunded.

Jacqueline M. Stone

Jacqueline M. Stone, Director
Technology Center 1700
Chemical and Materials Engineering

10/157,537

KENNETH L. NASH
P.O. BOX 680106
HOUSTON TX 77268-0106

UNITED STATES PATENT AND TRADEMARK OFFICE

Commissioner for Patents
United States Patent and Trademark Office
P.O. Box 1450
Alexandria, VA 22313-1450
www.uspto.gov

TEXAS INSTRUMENTS INCORPORATED
P.O. BOX 655474, M/S 3999
DALLAS, TX 75265

COPY MAILED

JUN 2 6 2008

OFFICE OF PETITIONS

ON PETITION

In re Application of :
Thiru Gnanasabapathy et al :
Application No. 10/157,552 :
Filed: May 29, 2002 :
Attorney Docket No. TI-32001 :

This is a decision on the petition under 37 CFR 1.137(b), filed March 5, 2008, to revive the above-identified application.

The petition is **GRANTED**.

The above-identified application became abandoned for failure to reply in a timely manner to the non-final Office action mailed July 6, 2007, which set a shortened statutory period for reply of three (3) months. No extension of time under the provisions of 37 CFR 1.136(a) were obtained. Accordingly, the above-identified application became abandoned on October 7, 2007.

The file does not indicate a change of address has been submitted, although the address given on the petition differs from the address of record. If appropriate, a change of address should be filed in accordance with MPEP 601.03. A courtesy copy of this decision is being mailed to the address given on the petition; however, the Office will mail all future correspondence solely to the address of record.

Telephone inquiries concerning this decision should be directed to Irvin Dingle at (571) 272-3210.

This matter is being referred to Technology Center AU 2137 for further processing.

Irvin Dingle
Petitions Examiner
Office of Petitions

cc: Alan Lintel
14785 Preston Rd., Suite 650
Dallas, TX 75254

UNITED STATES PATENT AND TRADEMARK OFFICE

Commissioner for Patents
United States Patent and Trademark Office
P. O. Box 1450
Alexandria, VA 22313-1450
www.uspto.gov

Paper No. 6

BABAK S. SANI
TOWNSEND AND TOWNSEND AND CREW LLP
TWO EMBARCADERO CENTER, 8TH FLOOR
SAN FRANCISCO, CA 94111-3834

COPY MAILED

AUG 2 5 2003

OFFICE OF PETITIONS

In re Application of :
Matthew Pharr :
Application No. 10/157,579 :
Filed: May 28, 2002 :
Attorney Docket No. 10626-009-999

NOTICE

This is a notice regarding your request for acceptance of a fee deficiency submission under 37 CFR 1.28. On September 1, 1998, the Court of Appeals for the Federal Circuit held that 37 CFR 1.28(c) is the sole provision governing the time for correction of the erroneous payment of the issue fee as a small entity. **See DH Technology v. Synergystex International, Inc. 154 F.3d 1333, 47 USPQ2d 1865 (Fed. Cir. Sept. 1, 1998).**

The Office no longer investigates or rejects original or reissue applications under 37 CFR 1.56. **1098 Off. Gaz. Pat. Office 502 (January 3, 1989)**. Therefore, nothing in this Notice is intended to imply that an investigation was done.

Your fee deficiency submission under 37 CFR 1.28 is hereby **ACCEPTED**.

Inquiries related to this communication should be directed to the Office of Petitions Staff at (703) 305-9285.

This file is being forwarded to Technology Center 2600.

Irvin Dingle
Petitions Examiner
Office of Petitions
Office of the Deputy Commissioner
for Patent Examination Policy

UNITED STATES PATENT AND TRADEMARK OFFICE

#8

COMMISSIONER FOR PATENTS
UNITED STATES PATENT AND TRADEMARK OFFICE
P.O. BOX 1450
ALEXANDRIA, VA 22313-1450
www.uspto.gov

MAILED

FEB 1 2 2004

Office of the Director
Group 3600

Edward H. Green, III
Coats & Bennett, PLLC
P.O. Box 5
Raleigh, NC 27602

In re Application of
Robert Little
Application No. 10/157,581
Filed: May 29, 2002
Attorney Docket No. 4726-008

DECISION ON PETITION FROM REQUIREMENT FOR RESTRICTION UNDER 37 CFR 1.144

This is a decision on the Petition from Requirement for Restriction filed November 17, 2003.

The petition to is **GRANTED.**

In the instant application a requirement for restriction between inventions was mailed on May 29, 2003, Paper No. 3. Petitioner responded to the restriction requirement in Paper No. 3, received June 25, 2003, by electing with traverse. The examiner made the restriction requirement final in Paper No. 5, mailed September 3, 2003. Petitioner responded to the final restriction requirement by petition received November 17, 2003.

Petitioner challenged the grounds for the restriction requirement arguing that the claims were not restrictable as process of making and product made. Petitioner pointed out that process claims 27-34 were directed to a method of connecting first and second units of a robotic tool coupler, which is not a process of making a product.

A review of the application file history reveals that the restriction requirement was indeed improperly set forth in paper no. 3. The wrong basis for the restriction requirement was relied upon by the examiner. The examiner stated that the inventions were related as process of making and product made, when in fact, the inventions are related as product and process of using. Accordingly, the restriction requirement as stated is in error, and is hereby withdrawn.

The application is being forwarded to the examiner for further treatment on the merits consistent with this decision.

Donald T. Hajec, Director
Technology Center 3600
(703) 306-4180

LHB/SNM: February 10, 2004
SNM

UNITED STATES PATENT AND TRADEMARK OFFICE

UNDER SECRETARY OF COMMERCE FOR INTELLECTUAL PROPERTY AND
DIRECTOR OF THE UNITED STATES PATENT AND TRADEMARK OFFICE
WASHINGTON, D.C. 20231
www.uspto.gov

JC 2/3/03

Paper No. 4

SKJERVEN MORRILL MacPHERSON LLP
25 Metro Drive, Suite 700
Houston, TX 77002

FEB 3 2003

In re Application of	:	
Ill Heung Choi.	:	DECISION ON REQUEST TO
Application No. 10/157,585	:	WITHDRAW FROM RECORD
Filed: May 28, 2002	:	
For: DUAL DIE PACKAGE	:	

This is a decision on the request to withdraw as attorney or agent of record pursuant to 37 C.F.R. § 1.36 and 37 C.F.R. § 10.40 filed on November 27, 2002.

The request is **APPROVED** for the withdrawal of all of the attorneys presently of record. The withdrawal is effective as of the date of this letter not when the request for withdrawal was filed.

The application currently has no attorney of record.

As requested, all future communications from the Office will be directed to Mr. John Castellano at the address provided below unless otherwise notified by applicant.

All inquiries relating to this decision should be directed to Edward Westin at (703) 308-4823.

Edward Westin

Edward Westin, Special Programs Examiner
Technology Center 2800
Semiconductors, Electrical and Optical
Systems and Components

cc: Mr. John Castellano
Harness, Dickey & Pierce
12355 Sunrise Valley Drive, Suite 350
Reston, VA 20191

UNITED STATES PATENT AND TRADEMARK OFFICE

Commissioner for Patents
United States Patent and Trademark Office
P.O. Box 1450
Alexandria, VA 22313-1450
www.uspto.gov

VERIZON
PATENT MANAGEMENT GROUP
1320 North Court House Road
9th Floor
ARLINGTON VA 22201-2909

COPY MAILED

APR 2 7 2009

OFFICE OF PETITIONS

In re Application of	:	
William D. Goodman	:	
Application No. 10/157,590	:	DECISION ON PETITION
Filed: May 29, 2002	:	
Attorney Docket No. 01-1523	:	

This is a decision on the petition under the unintentional provisions of 37 CFR 1.137(b), filed February 23, 2009, to revive the above-identified application.

The petition is **GRANTED**.

The application became abandoned for failure to reply in a timely manner to the non-final Office action mailed, April 30, 2008, which set a shortened statutory period for reply of three (3) months. No extensions of time under the provisions of 37 CFR 1.136(a) were obtained. Accordingly, the application became abandoned on July 31, 2008. The Notice of Abandonment was mailed November 19, 2008.

The petition satisfies the requirements of 37 CFR 1.137(b) in that petitioner has supplied (1) the reply in the form of an amendment, (2) the petition fee of $1,620, and (3) a proper statement of unintentional delay.

It is not apparent whether the person signing the statement of unintentional delay was in a position to have firsthand or direct knowledge of the facts and circumstances of the delay at issue. Nevertheless, such statement is being treated as having been made as the result of a reasonable inquiry into the facts and circumstances of such delay. See 37 CFR 10.18(b) and Changes to Patent Practice and Procedure; Final Rule Notice, 62 Fed. Reg. 53131, 53178 (October 10, 1997), 1203 Off. Gaz. Pat. Office 63, 103 (October 21, 1997). In the event that such an inquiry has not been made, petitioner must make such an inquiry. If such inquiry results in the discovery that it is not correct that the entire delay in filing the required reply from the due date for the reply until the filing of a grantable petition pursuant to 37 CFR 1.137(b) was unintentional, petitioner must notify the Office.

There is no indication that the person signing the petition was ever given a power of attorney to prosecute the application. If the person signing the petition desires to receive future correspondence regarding this application, the appropriate power of attorney document must be submitted. While a courtesy copy of this decision is being mailed to the person signing the petition, all future correspondence will be directed to the address currently of record until appropriate instructions are received.

Telephone inquiries concerning this decision should be directed to Terri Williams at (571)272-2991.

This application is being referred to Technology Center AU 2457 for appropriate action by the Examiner in the normal course of business on the reply received

Chris Bottorff
Petitions Examiner
Office of Petitions

cc: **Michael B. Stewart**
RADER, FISHMAN & GRAUER PLLC
39533 Woodward Avenue
Suite 140
Bloomfield Hills, MI 48304

UNITED STATES PATENT AND TRADEMARK OFFICE

COMMISSIONER FOR PATENTS
UNITED STATES PATENT AND TRADEMARK OFFICE
WASHINGTON, D.C. 20231
www.uspto.gov

Paper No. 3

KING & SPALDING
191 Peachtree Street, N.E.
Atlanta, GA 30303-1763

MAILED

SEP 25 2002

Technology Center 2100

In re Application of: Trevor A. Carone, et al.	)	
Application No. 10/157,596	)	
Filed: May 28, 2002	)	
For: METHOD AND SYSTEM FOR CREATING AND MAINTAINING AN INDEX FOR TRACKING FILES RELATING TO PEOPLE	)	**DECISION ON REQUEST FOR WITHDRAWAL AS ATTORNEY**

This is a decision on the Request To Withdraw from Representation filed September 4, 2002.

A grantable request to withdraw as attorney of record should indicate thereon the present mailing addresses of the attorney(s) who is/are withdrawing from the record and of the applicant. The request for withdrawal must be signed by every attorney seeking to withdraw or contain a clear indication that one attorney is signing on behalf of another/others. A request to withdraw will not be approved unless at least 30 (thirty) days would remain between the date of approval and the later of the expiration date of a time to file a response or the expiration date of the maximum time period which can be extended under 37 C.F.R. § 1. 136(a). The effective date of withdrawal being the date of decision and not the date of request. See M.P.E.P. § 402.06. 37 C.F.R. § 1.36 further requires that the applicant or patent owner be notified of the withdrawal of the attorney or agent.

The request is **GRANTED**.

All future communications from the Office will be directed to the below-listed address until otherwise notified by applicant. This correspondence address is provided by the withdrawn attorney(s). Applicant is reminded of the obligation to promptly notify the Patent and Trademark Office (Office) of any change in correspondence address to ensure receipt of all communications from the Office.

For

Vincent N. Trans
Special Programs Examiner
Technology Center 2100
Computer Architecture and Software
(703) 305-9750

UNITED STATES PATENT AND TRADEMARK OFFICE

Commissioner for Patents
United States Patent and Trademark Office
P.O. Box 1450
Alexandria, VA 22313-1450
www.uspto.gov

SCULLY SCOTT MURPHY & PRESSER, PC
400 GARDEN CITY PLAZA
SUITE 300
GARDEN CITY NY 11530

COPY MAILED

FEB 0 2 2007

OFFICE OF PETITIONS

In re Application of	:	
Naoya Shibata, et al.	:	
Application No. 10/157,599	:	ON PETITION
Filed: May 29, 2002	:	
Attorney Docket No. 15575	:	

This is a decision on the petition under the unintentional provisions of 37 CFR 1.137(b), filed September 6, 2006 to revive the above-identified application.

The petition is **GRANTED**.

The application became abandoned for failure to timely file a reply within the meaning of 37 CFR 1.113 to the final Office action of March 22, 2005. The proposed reply required for consideration of a petition to revive must be a Notice of Appeal (and appeal fee required by 37 CFR 41.20(b)(2), an amendment that *prima facie* places the application in condition for allowance, a Request for Continued Examination and submission (37 CFR 1.114), or the filing of a continuing application under 37 CFR 1.53(b). See MPEP 711.03(c)(II)(A)(2). A three-month extension of time pursuant to the provisions of 37 CFR 1.136(a) was obtained. Accordingly, the date of abandonment of this application is September 23, 2006.

The petition satisfies the requirements of 37 CFR 1.137(b) in that petitioner has supplied (1) the reply in the form of a Request for Continued Examination (RCE) and fee of $790, and the submission required by 37 CFR 1.114; (2) the petition fee of $1500; and (3) a proper statement of unintentional delay.

Telephone inquiries concerning this decision should be directed to the April Wise at (571) 272-1642.

This application is being referred to Technology Center AU 2628 for processing of the RCE and for appropriate action by the Examiner in the normal course of business on the amendment submitted in accordance with 37 CFR 1.114.

Irvin Dingle
Petitions Examiner
Office of Petitions

UNITED STATES PATENT AND TRADEMARK OFFICE

COMMISSIONER FOR PATENTS
UNITED STATES PATENT AND TRADEMARK OFFICE
P.O. BOX 1450
ALEXANDRIA, VA 22313-1450
www.uspto.gov

MAIL

APR 0 8 2005

DIRECTOR OFFICE
TECHNOLOGY CENTER 2600

RUBEN C. DELEON
WINSTEAD SECHROST &
MINICK, P.C.
P.O. BOX 50784
DALLAS, TX 75201

In re application of:
Allen D. Kaplan, et al.
Application No. 10/157,611
Filed: May 29, 2002
For: MULTI-PROTOCOL TELECOMMUNICATIONS ROUTING OPTIMIZATION

DECISION ON REQUEST TO WITHDRAW FROM RECORD

This is a decision on the request to withdraw as attorney/agent and change of address filed on March 15, 2005.

A grantable request to withdraw as attorney/agent of record must:
(1) indicate the present mailing address of the attorney(s)/agent(s) who seek(s) to withdraw, and
(2) be signed by each attorney/agent seeking to withdraw or clearly be signed on their behalf, and
(3) be *approved* at least thirty (30) days prior to the maximum extendable period for response to any outstanding Office Action, and
(4) indicate the address to which future correspondence should be mailed.

Petitioner has satisfied the requirements for successfully requesting withdrawal. Accordingly, the request is **GRANTED.**

All of the attorneys/agents of record are withdrawn.

All future communications from the Office will be directed to the address listed below until otherwise notified by applicant. Applicant is reminded of the obligation to promptly notify the Patent and Trademark Office of any change in correspondence address to ensure receipt of all communications from the Office.

Kenneth A. Wieder
Special Program Examiner
Technology Center 2600
Communications
(571) 272-1986

cc: Abe Hershkovitz
Hershkovitz & Associates
1725 I Street, N.W., Suite 300
Washington, DC 20006

UNITED STATES PATENT AND TRADEMARK OFFICE

COMMISSIONER FOR PATENTS
UNITED STATES PATENT AND TRADEMARK OFFICE
P.O. BOX 1450
ALEXANDRIA, VA 22313-1450
WWW.USPTO.GOV

Paper No. None

HERSHKOVITZ & ASSOCIATES
2845 DUKE STREET
ALEXANDRIA VA 22314

COPY MAILED
SEP 14 2006
OFFICE OF PETITIONS

In re Application of :
Allen D. Kaplan et al. :
Application No. 10/157,611 : DECISION ON PETITION
Filing Date: May 29, 2002 : UNDER 37 C.F.R. § 1.137(B)
Attorney Docket No.: 28857.22 :
Title: MULTI-PROTOCOL :
TELECOMMUNICATIONS ROUTING :
OPTIMIZATION

This is a decision on the petition under 37 C.F.R §1.137(b)[1], filed June 19, 2006, to revive the above-identified application. A supplement to the present petition was filed on August 16, 2006.

The above-identified application became abandoned for failure to reply in a timely manner to the non-final Office action, mailed October 17, 2005, which set a shortened statutory period for reply of three months. No response was received, and no extensions of time under the provisions of 37 C.F.R. §1.136(a) were requested. Accordingly, the above-identified application became abandoned on January 18, 2006. A notice of abandonment was mailed on June 20, 2006.

---

1 A grantable petition pursuant to 37 CFR 1.137(b) must be accompanied by:
(1) The reply required to the outstanding Office action or notice, unless previously filed;
(2) The petition fee as set forth in § 1.17(m);
(3) A statement that the entire delay in filing the required reply from the due date for the reply until the filing of a grantable petition pursuant to this paragraph was unintentional. The Commissioner may require additional information where there is a question whether the delay was unintentional, and;
(4) Any terminal disclaimer (and fee as set forth in § 1.20(d)) required pursuant to paragraph (d) of this section.

37 C.F.R. §1.137(b)(3) requires a statement that the entire delay in filing the required reply from the due date for the reply until the filing of a grantable petition pursuant to 37 C.F.R. §1.137(b) was unintentional. Since the statement contained in the instant petition varies from the language required by 37 C.F.R. §1.137(b)(3), the statement contained in the instant petition is being construed as the statement required by 37 C.F.R. §1.137(b)(3) and petitioner must notify the Office if this is not a correct interpretation of the statement contained in the instant petition.

With the present petition, Petitioner has submitted the petition fee, an amendment, and a statement which is being construed as the proper statement of unintentional delay. It is noted that a terminal disclaimer is not necessary.

Petitioner has met all requirements for a grantable petition under 37 C.F.R. §1.137(b). As such, the petition is **GRANTED**.

The Technology Center will be notified of this decision. The Technology Center's support staff will notify the Examiner of this decision, so that the amendment which was received with the present petition can be processed.

It is noted that the address listed on the petition differs from the address of record. The application file does not indicate a change of correspondence address has been filed in this case, although the address given on the petition differs from the address of record. If petitioner desires to receive future correspondence regarding this application, the change of correspondence address must be submitted. A courtesy copy of this decision will be mailed to petitioner. However, all future correspondence will be directed to the address of record until such time as appropriate instructions are received to the contrary. Petitioner will not receive future correspondence related to this application unless Change of Correspondence Address, Patent Form (PTO/SB/122) is submitted for the above-identified application. For petitioner's convenience, a blank Change of Correspondence Address, Patent Form (PTO/SB/122), may be found at http://www.uspto.gov/web/forms/sb0122.pdf.

The correct petition fee and fee associated with the filing of a statutory disclaimer have been charged to Petitioner's Deposit Account, as authorized in the petition.

Telephone inquiries regarding *this decision* should be directed to the undersigned at (571) 272-3225[2]. All other inquiries concerning examination procedures or status of the application should be directed to the Technology Center.

Paul Shanoski
Senior Attorney
Office of Petitions
United States Patent and Trademark Office

cc: HERSHKOVITZ & ASSOCIATES
1725 I Street, NW
Suite 300
Washington, DC 20006

2 Petitioner will note that all practice before the Office should be in writing, and the action of the Office will be based exclusively on the written record in the Office. See 37 C.F.R. §1.2. As such, Petitioner is reminded that no telephone discussion may be controlling or considered authority for Petitioner's further action(s).

UNITED STATES PATENT AND TRADEMARK OFFICE

Commissioner for Patents
United States Patent and Trademark Office
P.O. Box 1450
Alexandria, VA 22313-1450
www.uspto.gov

MAY 16 2006

Frank J. Jordan
Jordan and Hamburg LLP
122 East 42nd Street
New York, NY 10168

In re Application of: TAKAHASHI et al.	:
Appl. No.: 10/157,659	: DECISION ON PETITION
Filed: May 20, 2002	:
For: SERVER DEVICE FOR NET GAME, NET GAME MANAGEMENT METHOD, NET GAME MANAGEMENT PROGRAM AND RECODING MEDIUM WHICH STORES NET GAME MANAGEMENT PROGRAM	:

This is a decision on the petition filed on February 16, 2006 by which petitioners request withdrawal of the finality of the Office action dated November 29, 2005. The petition is considered pursuant to 37 CFR 1.181, and no fee is required.

The petition is dismissed as being untimely filed.

Review of the record shows that the instant petition was filed well into the third month after the mailing date of the final Office action. Pursuant to 37 CFR 1.181(f), the petition is not timely filed since the petition was not filed within two months of the action complained of. As the petition was not timely filed, the relief requested will not be granted.

Petitioner may seek relief by way of a request for reconsideration before the primary examiner.

PETITION DISMISSED

Karen M. Young

Karen M. Young, Director
Technology Center 3700

UNITED STATES PATENT AND TRADEMARK OFFICE

COMMISSIONER FOR PATENTS
UNITED STATES PATENT AND TRADEMARK OFFICE
P.O. BOX 1450
ALEXANDRIA, VA 22313-1450
www.uspto.gov

NXP, B.V.
NXP INTELLECTUAL PROPERTY DEPARTMENT
M/S41-SJ
1109 MCKAY DRIVE
SAN JOSE, CA 95131

COPY MAILED

FEB 21 2008

OFFICE OF PETITIONS

In re Application of	:	
Robert Fifield	:	
Application No. 10/157,688	:	DECISION ON PETITION
Filed: May 29, 2002	:	
Attorney Docket No. PHGB 010103	:	

This is a decision on the petition under the unintentional provisions of 37 CFR 1.137(b), filed May 4, 2007, to revive the above-identified application.

The application became abandoned for failure to timely file a reply to the final Office action mailed March 7, 2006. A Notice of Abandonment was mailed on December 18, 2006.

It is not apparent whether the statement of unintentional delay was signed by a person who would have been in a position of knowing that the entire delay in filing the required reply from the due date for the reply until the filing of a grantable petition pursuant to 37 CFR 1.137(b) was unintentional. Nevertheless, in accordance with 37 CFR 10.18, the statement is accepted as constituting a certification of unintentional delay. However, in the event that petitioner has no knowledge that the delay was unintentional, petitioner must make such an inquiry to ascertain that, in fact, the delay was unintentional. If petitioner discovers that the delay was intentional, petitioner must so notify the Office.

Further, there is no indication that the person signing the instant petition was ever given a power of attorney or authorization of agent to prosecute the above-identified application. Thus, in accordance with 37 CFR 1.34(a), the signature of Michael J. Ure appearing on the petition shall constitute a representation to the United States Patent and Trademark Office that he/she is authorized to represent the particular party in whose behalf he/she acts.

The petition satisfies the requirements of 37 CFR 1.137(b), in that, petitioner has supplied (1) the reply in the form of a Notice of Appeal and $500 fee; (2) the petition fee of $1,500; and (3) a proper statement of unintentional delay. Therefore, the petition is **GRANTED**.

The two-month period for filing an appeal brief under 37 CFR 41.37 (accompanied by the fee required by 37 CFR 41.20(b)(2)), runs from the date of this decision.

This application is being referred to Technology Center Art Unit 2611, to await the filing of an appeal brief or for such other appropriate reply as may be submitted to continue prosecution of the application.

Telephone inquiries concerning this decision should be directed to the undersigned at (571) 272-3226.

Andrea Smith
Petitions Examiner
Office of Petitions

UNITED STATES PATENT AND TRADEMARK OFFICE

COMMISSIONER FOR PATENTS
UNITED STATES PATENT AND TRADEMARK OFFICE
P.O. BOX 1450
ALEXANDRIA, VA 22313-1450
www.uspto.gov

CAMPBELL STEPHENSON ASCOLESE, LLP
4807 SPICEWOOD SPRINGS RD.
BLDG. 4, SUITE 201
AUSTIN TX 78759

COPY MAILED

MAY 21 2007

OFFICE OF PETITIONS

In re Application of :
Ward :
Application No. 10/157,717 : DECISION ON PETITION
Filed: May 29, 2002 :
Attorney Docket No. CIS014C1US :

This is a decision on the petition under 37 CFR 1.78(a)(3), filed September 19, 2006, to accept an unintentionally delayed claim under 35 U.S.C. § 120 for the benefit of the prior-filed nonprovisional application set forth in the concurrently filed amendment.

The petition is **DISMISSED**.

A petition for acceptance of a claim for late priority under 37 CFR 1.78(a)(3) is only applicable to those applications filed on or after November 29, 2000. Further, the petition is appropriate only after the expiration of the period specified in 37 CFR 1.78(a)(2)(ii). In addition, the petition under 37 CFR 1.78(a)(3) must be accompanied by:

(1) the reference required by 35 U.S.C. § 120 and 37 CFR 1.78(a)(2)(i) of the prior-filed application, unless previously submitted;
(2) the surcharge set forth in § 1.17(t); and
(3) a statement that the entire delay between the date the claim was due under 37 CFR 1.78(a)(2)(ii) and the date the claim was filed was unintentional. The Director may require additional information where there is a question whether the delay was unintentional.

The petition fails to satisfy item (1) above. In this regard, the amendment submitted with the petition references the prior-filed application by the patent number rather than by the application number. *Note* 35 U.S.C. § 120, which provides, in relevant part:

> No application shall be entitled to the benefit of an earlier filed application under this section unless an amendment containing the specific reference to the earlier filed **application** is submitted at such time during the pendency of the application as required by the Director. [Emphasis supplied.]

Note also CFR 1.78(a)(2)(i), which states, in relevant part:

> Except for a continued prosecution application filed under § 1.53(d), any nonprovisional application claiming the benefit of one or more prior-filed copending nonprovisional application * * * must contain or be amended to contain a reference to each such prior-filed application, **identifying it by application number (consisting of the series code and serial number)** *** and indicating the relationship of the applications. [Emphasis supplied.]

Accordingly, a proper amendment complying with the provisions of 37 CFR 1.121 and satisfying the requirements of 37 CFR 1.78(a)(2)(i) must be submitted, along with a renewed petition under 37 CFR 1.78(a)(3).

Further correspondence with respect to this matter should be addressed as follows:

By mail: Mail Stop PETITIONS
Commissioner for Patents
Post Office Box 1450
Alexandria, VA 22313-1450

By hand: Customer Service Window
Mail Stop Petitions
Randolph Building
401 Dulany Street
Alexandria, VA 22314

By fax: (571) 273-8300
ATTN: Office of Petitions

Any questions concerning this matter may be directed to the undersigned at (571) 272-3230.

Shirene Willis Brantley

Shirene Willis Brantley
Senior Petitions Attorney
Office of Petitions

UNITED STATES PATENT AND TRADEMARK OFFICE

Commissioner for Patents
United States Patent and Trademark Office
P.O. Box 1450
Alexandria, VA 22313-1450
www.uspto.gov

CAMPBELL STEPHENSON ASCOLESE, LLP
4807 SPICEWOOD SPRINGS RD.
BLDG. 4, SUITE 201
AUSTIN TX 78759

COPY MAILED

JUN 27 2007

OFFICE OF PETITIONS

In re Application of
Ward
Application No. 10/157,717
Filed: May 29, 2002
Attorney Docket No. CIS014C1US

DECISION ON PETITION

This is a decision on the reconsideration petition under 37 CFR 1.78(a)(3), filed June 8, 2007, to accept an unintentionally delayed claim under 35 U.S.C. § 120 for the benefit of the prior-filed nonprovisional application set forth in the concurrently filed amendment.

The petition is **GRANTED**.

A petition for acceptance of a claim for late priority under 37 CFR 1.78(a)(3) is only applicable to those applications filed on or after November 29, 2000. Further, the petition is appropriate only after the expiration of the period specified in 37 CFR 1.78(a)(2)(ii). In addition, the petition under 37 CFR 1.78(a)(3) must be accompanied by:

(1) the reference required by 35 U.S.C. § 120 and 37 CFR 1.78(a)(2)(i) of the prior-filed application, unless previously submitted;
(2) the surcharge set forth in § 1.17(t); and
(3) a statement that the entire delay between the date the claim was due under 37 CFR 1.78(a)(2)(ii) and the date the claim was filed was unintentional. The Director may require additional information where there is a question whether the delay was unintentional.

All of the above requirements having been satisfied, the late claim for priority under 35 U.S.C. § 120 is accepted as being unintentionally delayed.

The granting of the petition to accept the delayed benefit claim to the prior-filed application under 37 CFR 1.78(a)(3) should not be construed as meaning that this application is entitled to the benefit of the prior-filed application. In order for this application to be entitled to the benefit of the prior-filed application, all other requirements under 35 U.S.C. § 120 and 37

CFR 1.78(a)(1) and (a)(2) must be met. Similarly, the fact that the corrected Filing Receipt accompanying this decision on petition includes the prior-filed application should not be construed as meaning that applicant is entitled to the claim for benefit of priority to the prior-filed application noted thereon. Accordingly, the examiner will, in due course, consider this benefit claim and determine whether the application is entitled to the benefit of the earlier filing date.

A corrected Filing Receipt, which includes the priority claim to the prior-filed nonprovisional applications, accompanies this decision on petition.

Any inquiries concerning this decision may be directed to the undersigned at (571) 272-3230. All other inquiries concerning either the examination procedures or status of the application should be directed to the Technology Center.

This application is being forwarded to Technology Center Art Unit 2145 for consideration by the examiner of applicant's entitlement to claim benefit of priority under 35 U.S.C. § 120 to the prior-filed application.

Shirene Willis Brantley
Senior Petitions Attorney
Office of Petitions

ATTACHMENT: Corrected Filing Receipt

UNITED STATES PATENT AND TRADEMARK OFFICE

UNITED STATES DEPARTMENT OF COMMERCE
United States Patent and Trademark Office
Address: COMMISSIONER FOR PATENTS
P.O. Box 1450
Alexandria, Virginia 22313-1450
www.uspto.gov

APPL NO.	FILING OR 371(c) DATE	ART UNIT	FIL FEE REC'D	ATTY.DOCKET NO	TOT CLMS	IND CLMS
10/157,717	05/29/2002	2145	1412	CIS0146C1US	25	4

CONFIRMATION NO. 7911

CORRECTED FILING RECEIPT

OC000000024529782

33031
CAMPBELL STEPHENSON ASCOLESE, LLP
4807 SPICEWOOD SPRINGS RD.
BLDG. 4, SUITE 201
AUSTIN, TX 78759

Date Mailed: 06/26/2007

Receipt is acknowledged of this regular Patent Application. It will be considered in its order and you will be notified as to the results of the examination. Be sure to provide the U.S. APPLICATION NUMBER, FILING DATE, NAME OF APPLICANT, and TITLE OF INVENTION when inquiring about this application. Fees transmitted by check or draft are subject to collection. Please verify the accuracy of the data presented on this receipt. **If an error is noted on this Filing Receipt, please mail to the Commissioner for Patents P.O. Box 1450 Alexandria Va 22313-1450. Please provide a copy of this Filing Receipt with the changes noted thereon. If you received a "Notice to File Missing Parts" for this application, please submit any corrections to this Filing Receipt with your reply to the Notice. When the USPTO processes the reply to the Notice, the USPTO will generate another Filing Receipt incorporating the requested corrections (if appropriate).**

Applicant(s)

Paul Ward, Cupertino, CA;

Assignment For Published Patent Application

Cisco Technology, Inc.

Power of Attorney: The patent practitioners associated with Customer Number **33031**.

Domestic Priority data as claimed by applicant

This application is a CON of 09/220,870 12/23/1998 PAT 6,438,606

Foreign Applications

If Required, Foreign Filing License Granted: 07/01/2002

The country code and number of your priority application, to be used for filing abroad under the Paris Convention, is US10/157,717

Projected Publication Date: Request for Non-Publication Acknowledged

Non-Publication Request: Yes

Early Publication Request: No

Title

Router image support device

Preliminary Class

709

PROTECTING YOUR INVENTION OUTSIDE THE UNITED STATES

Since the rights granted by a U.S. patent extend only throughout the territory of the United States and have no effect in a foreign country, an inventor who wishes patent protection in another country must apply for a patent in a specific country or in regional patent offices. Applicants may wish to consider the filing of an international application under the Patent Cooperation Treaty (PCT). An international (PCT) application generally has the same effect as a regular national patent application in each PCT-member country. The PCT process **simplifies** the filing of patent applications on the same invention in member countries, but **does not result** in a grant of "an international patent" and does not eliminate the need of applicants to file additional documents and fees in countries where patent protection is desired.

Almost every country has its own patent law, and a person desiring a patent in a particular country must make an application for patent in that country in accordance with its particular laws. Since the laws of many countries differ in various respects from the patent law of the United States, applicants are advised to seek guidance from specific foreign countries to ensure that patent rights are not lost prematurely.

Applicants also are advised that in the case of inventions made in the United States, the Director of the USPTO must issue a license before applicants can apply for a patent in a foreign country. The filing of a U.S. patent application serves as a request for a foreign filing license. The application's filing receipt contains further information and guidance as to the status of applicant's license for foreign filing.

Applicants may wish to consult the USPTO booklet, "General Information Concerning Patents" (specifically, the section entitled "Treaties and Foreign Patents") for more information on timeframes and deadlines for filing foreign patent applications. The guide is available either by contacting the USPTO Contact Center at 800-786-9199, or it can be viewed on the USPTO website at http://www.uspto.gov/web/offices/pac/doc/general/index.html.

For information on preventing theft of your intellectual property (patents, trademarks and copyrights), you may wish to consult the U.S. Government website, http://www.stopfakes.gov. Part of a Department of Commerce initiative, this website includes self-help "toolkits" giving innovators guidance on how to protect intellectual property in specific countries such as China, Korea and Mexico. For questions regarding patent enforcement issues, applicants may call the U.S. Government hotline at 1-866-999-HALT (1-866-999-4158).

LICENSE FOR FOREIGN FILING UNDER
Title 35, United States Code, Section 184
Title 37, Code of Federal Regulations, 5.11 & 5.15

GRANTED

The applicant has been granted a license under 35 U.S.C. 184, if the phrase "IF REQUIRED, FOREIGN FILING LICENSE GRANTED" followed by a date appears on this form. Such licenses are issued in all applications where the conditions for issuance of a license have been met, regardless of whether or not a license may be required as set forth in 37 CFR 5.15. The scope and limitations of this license are set forth in 37 CFR 5.15(a) unless an earlier license has been issued under 37 CFR 5.15(b). The license is subject to revocation upon written notification. The date indicated is the effective date of the license, unless an earlier license of similar scope has been granted under 37 CFR 5.13 or 5.14.

This license is to be retained by the licensee and may be used at any time on or after the effective date thereof unless it is revoked. This license is automatically transferred to any related applications(s) filed under 37 CFR 1.53(d). This license is not retroactive.

The grant of a license does not in any way lessen the responsibility of a licensee for the security of the subject matter as imposed by any Government contract or the provisions of existing laws relating to espionage and the national security or the export of technical data. Licensees should apprise themselves of current regulations especially with respect to certain countries, of other agencies, particularly the Office of Defense Trade Controls, Department of State (with respect to Arms, Munitions and Implements of War (22 CFR 121-128)); the Bureau of Industry and Security, Department of Commerce (15 CFR parts 730-774); the Office of Foreign Assets Control, Department of Treasury (31 CFR Parts 500+) and the Department of Energy.

NOT GRANTED

No license under 35 U.S.C. 184 has been granted at this time, if the phrase "IF REQUIRED, FOREIGN FILING LICENSE GRANTED" DOES NOT appear on this form. Applicant may still petition for a license under 37 CFR 5.12, if a license is desired before the expiration of 6 months from the filing date of the application. If 6 months has lapsed from the filing date of this application and the licensee has not received any indication of a secrecy order under 35 U.S.C. 181, the licensee may foreign file the application pursuant to 37 CFR 5.15(b).

SPE RESPONSE FOR CERTIFICATE OF CORRECTION

Paper No.: _____

DATE : 5/12/05

TO SPE OF : ART UNIT 3672

SUBJECT : Request for Certificate of Correction on Patent No.: 6,834,726 10/157743

A response is requested with respect to the accompanying request for a certificate of correction.

Please complete this form and return with file, within **7** days to:
Certificates of Correction Branch - PK 3-915
Palm location **7580** - Tel. No. 305-8309

With respect to the change(s) requested, correcting Office and/or Applicant's errors, should the patent read as shown in the certificate of correction? No new matter should be introduced, nor should the scope or meaning of the claims be changed.

Thank You For Your Assistance

Certificates of Correction Branch

The request for issuing the above-identified correction(s) is hereby:
Note your decision on the appropriate box.

- [x] **Approved** — All changes apply.
- [ ] **Approved in Part** — Specify below which changes **do not** apply.
- [ ] **Denied** — State the reasons for denial below.

Comments:

DAVID BAGNELL
SUPERVISORY PATENT EXAMINER
TECHNOLOGY CENTER 3600

SPE

3672
Art Unit

UNITED STATES PATENT AND TRADEMARK OFFICE

COMMISSIONER FOR PATENTS
UNITED STATES PATENT AND TRADEMARK OFFICE
P.O. BOX 1450
ALEXANDRIA, VA 22313-1450
www.uspto.gov

Paper No. 7

MARTIN FLEIT
FLEIT, KAIN, GIBBONS, GUTMAN, BONGINI & BIANCO, P.L.
601 BRICKELL KEY DRIVE
MIAMI, FL 33131

COPY MAILED

NOV 1 3 2003

OFFICE OF PETITIONS

ON PETITION

In re Application of :
Charles Perryman :
Application No. 10/157,746 :
Filed: May 29, 2002 :
Attorney Docket No. 722-X02-030 :

This is a decision on the petition under 37 CFR 1.137(b), filed October 20, 2003, to revive the above-identified application.

The petition is **GRANTED**.

The above-identified application became abandoned for failure to reply in a timely manner to the Notice to File Missing Parts of Application (Notice) mailed July 2, 2002. The Notice set a period for reply of two (2) months from the mail date of the Notice. No extensions of time under the provisions of 37 CFR 1.136(a) were obtained. Accordingly, the above-identified application became abandoned on September 3, 2002.

The file is being forwarded to the Office of Initial Patent Examination for further processing.

Telephone inquiries concerning this matter may be directed to the undersigned at (703) 306-9200.

Edward J. Tannouse
Petitions Attorney
Office of Petitions
United States Patent and Trademark Office

UNITED STATES PATENT AND TRADEMARK OFFICE

Commissioner for Patents
United States Patent and Trademark Office
P.O. Box 1450
Alexandria, VA 22313-1450
www.uspto.gov

TEXAS INSTRUMENTS INCORPORATED
PO BOX 655474, M/S 3999
DALLAS, TX 75265

COPY MAILED
MAY 29 2008
OFFICE OF PETITIONS

In re Application of	:	
Gerard CHAUVEL, et al	:	
Application No. 10/157,773	:	DECISION ON PETITION
Filed: May 29, 2002	:	
Attorney Docket No. TI-32825	:	

This is a decision on the petition under the unintentional provisions of 37 CFR 1.137(b), filed March 6, 2008, to revive the above-identified application.

The petition is **GRANTED**.

The application became abandoned for failure to reply in a timely manner to the non-final Office action mailed, June 20, 2007, which set a shortened statutory period for reply of three (3) months. No extensions of time under the provisions of 37 CFR 1.136(a) were obtained. Accordingly, the application became abandoned on September 21, 2007.

The petition satisfies the requirements of 37 CFR 1.137(b) in that petitioner has supplied (1) the reply in the form of an amendment, (2) the petition fee of $1540; and (3) an adequate statement of unintentional delay.

It is not apparent whether the person signing the statement of unintentional delay was in a position to have firsthand or direct knowledge of the facts and circumstances of the delay at issue. Nevertheless, such statement is being treated as having been made as the result of a reasonable inquiry into the facts and circumstances of such delay. See 37 CFR 10.18(b) and

Changes to Patent Practice and Procedure; Final Rule Notice, 62 Fed. Reg. 53131, 53178 (October 10, 1997), 1203 Off. Gaz. Pat. Office 63, 103 (October 21, 1997). In the event that such an inquiry has not been made, petitioner must make such an inquiry. If such inquiry results in the discovery that it is not correct that the entire delay in filing the required reply from the due date for the reply until the filing of a grantable petition pursuant to 37 CFR 1.137(b) was unintentional, petitioner must notify the Office.

There is no indication that the person signing the petition was ever given a power of attorney to prosecute the application. If the person signing the petition desires to receive future correspondence regarding this application, the appropriate power of attorney document must be submitted. A courtesy copy of this decision is being mailed to the petitioner. Never the less, all future correspondence regarding this application file will be directed solely to the address of record until otherwise instructed.

Telephone inquiries concerning this decision should be directed to Diane Goodwyn at (571) 272-6735.

This application is being referred to Technology Center AU 2195 for appropriate action by the Examiner in the normal course of business on the reply received March 6, 2008.

April Wise
Petitions Examiner
Office of Petitions

cc: ALAN LINTEL
14785 PRESTON RD.
SUITE 650
DALLAS, TX 75254

SPE RESPONSE FOR CERTIFICATE OF CORRECTION

DATE : 11/9/04

Paper No.: _____

TO SPE OF : ART UNIT 1700

SUBJECT : Request for Certificate of Correction on Patent No.: 6728091 B2

A response is requested with respect to the accompanying request for a certificate of correction.

Please complete this form and return with file, within 7 days to:
Certificates of Correction Branch - PK 3-915
Palm location **7580** - Tel. No. 305-8309

With respect to the change(s) requested, correcting Office and/or Applicant's errors, should the patent read as shown in the certificate of correction? No new matter should be introduced, nor should the scope or meaning of the claims be changed.

Virginia Tolbert

Thank You For Your Assistance

Certificates of Correction Branch

The request for issuing the above-identified correction(s) is hereby:
Note your decision on the appropriate box.

- ☑ **Approved** — All changes apply.
- ☐ **Approved in Part** — Specify below which changes **do not** apply.
- ☐ **Denied** — State the reasons for denial below.

Comments:

THE REFERENCES WERE CONSIDERED/CITED IN ACTION OF 6/03.

RANDY GULAKOWSKI
SUPERVISORY PATENT EXAMINER
TECHNOLOGY CENTER 1700

SPE

1712

Art Unit

UNITED STATES PATENT AND TRADEMARK OFFICE

Commissioner for Patents
United States Patent and Trademark Office
P.O. Box 1450
Alexandria, VA 22313-1450
www.uspto.gov

COPY MAILED

MAR 29 2007

OFFICE OF PETITIONS

MERCHANT & GOULD (MICROSOFT)
P.O. BOX 2903
MINNEAPOLIS MN 55402

In re Application of	:	
Ashwin Palekar et al	:	
Application No. 10/157,806	:	ON PETITION
Filed: May 30, 2002	:	
Attorney Docket No. 14917.0430US01	:	

This is a decision on the petition, filed March 27, 2007, under 37 CFR 1.313(c)(2) to withdraw the above-identified application from issue after payment of the issue fee.

The petition is **GRANTED.**

The above-identified application is withdrawn from issue for consideration of a submission under 37 CFR 1.114 (request for continued examination). See 37 CFR 1.313(c)(2).

Petitioner is advised that the issue fee paid on February 28, 2007 in the above-identified application cannot be refunded. If, however, the above-identified application is again allowed, petitioner may request that it be applied towards the issue fee required by the new Notice of Allowance.[1]

Telephone inquiries should be directed to the undersigned at (571) 272-3208.

The examiner of Technology Center AU 2137 will consider the request for continued examination under 37 CFR 1.114.

Karen Creasy

Karen Creasy
Petitions Examiner
Office of Petitions

---

[1] The request to apply the issue fee to the new Notice may be satisfied by completing and returning the new Issue Fee Transmittal Form PTOL-85(b), which includes the following language thereon: "Commissioner for Patents is requested to apply the Issue Fee and Publication Fee (if any) or re-apply any previously paid issue fee to the application identified above." Petitioner is advised that, whether a fee is indicated as being due or not, the Issue Fee Transmittal Form **must** be completed and timely submitted to avoid abandonment. Note the language in bold text on the first page of the Notice of Allowance and Fee(s) Due (PTOL-85).

UNITED STATES PATENT AND TRADEMARK OFFICE

UNITED STATES DEPARTMENT OF COMMERCE
United States Patent and Trademark Office
Address: COMMISSIONER FOR PATENTS
P.O. Box 1450
Alexandria, Virginia 22313-1450
www.uspto.gov

APPLICATION NO.	FILING DATE	FIRST NAMED INVENTOR	ATTORNEY DOCKET NO.	CONFIRMATION NO.
10/157,806	05/30/2002	Ashwin Palekar	14917.0430US01	7418

27488 7590 12/26/2007
MERCHANT & GOULD (MICROSOFT)
P.O. BOX 2903
MINNEAPOLIS, MN 55402-0903

EXAMINER
GERGISO, TECHANE

ART UNIT	PAPER NUMBER
2137	

MAIL DATE	DELIVERY MODE
12/26/2007	PAPER

Please find below and/or attached an Office communication concerning this application or proceeding.

The time period for reply, if any, is set in the attached communication.

UNITED STATES PATENT AND TRADEMARK OFFICE

COMMISSIONER FOR PATENTS
UNITED STATES PATENT AND TRADEMARK OFFICE
P.O. BOX 1450
ALEXANDRIA, VA 22313-1450
www.uspto.gov

Timothy B. Scull
Merchant & Gould (Microsoft)
P.O. Box 2903
Minneapolis, MN 55402-0903

MAILED

DEC 27 2007

TECHNOLOGY CENTER 2100

In re Application of:
Ashwin PALEKAR et al
Appl. No.: 10/157,806
Filed: May 30, 2002
For: TLS TUNNELING

DECISION ON PETITION
UNDER 37 CFR § 1.59

This is a decision on the petition under 37 CFR § 1.59(b), filed on 11 December 2007, to expunge information submitted pursuant to MPEP § 724.05.

The petition is **DISMISSED**.

Petitioner requests that the information submitted on 11 December 2007 be expunged from the record if found not to be important to a reasonable examiner in deciding whether to allow the application to issue as a patent. The petition fee set forth in 37 CFR § 1.17(g) has been paid.

The petition is premature because the application has not been allowed or abandoned. Accordingly, it is not appropriate to make a final determination of whether or not the material requested to be expunged is "material," with "materiality" being defined as any information which the examiner considers as being important to a determination of patentability of the claims. Thus, the petition to expunge must be dismissed at this time.

During prosecution on the merits, the examiner will determine whether or not the information submitted on 11 December 2007 is considered to be "material." Once prosecution on the merits is closed, applicant may re-submit a petition to expunge the information. No further fee is required for such a second submission of a petition under 37 CFR § 1.59 to expunge information. If the information is not considered by the examiner to be material, the information will be expunged from the application and may be returned to applicant.

Any inquiry concerning this decision should be directed to the undersigned whose telephone number is (571) 272-3613.

Vincent N. Trans, SPRE/QAS
Technology Center 2100
Computer Architecture, Software, and
Information Security

UNITED STATES PATENT AND TRADEMARK OFFICE

UNITED STATES DEPARTMENT OF COMMERCE
United States Patent and Trademark Office
Address: COMMISSIONER FOR PATENTS
P.O. Box 1450
Alexandria, Virginia 22313-1450
www.uspto.gov

APPLICATION NO.	FILING DATE	FIRST NAMED INVENTOR	ATTORNEY DOCKET NO.	CONFIRMATION NO.
10/157,806	05/30/2002	Ashwin Palekar	14917.0430US01	7418

27488 7590 04/06/2009
MERCHANT & GOULD (MICROSOFT)
P.O. BOX 2903
MINNEAPOLIS, MN 55402-0903

EXAMINER
GERGISO, TECHANE

ART UNIT	PAPER NUMBER
2437	

MAIL DATE	DELIVERY MODE
04/06/2009	PAPER

Please find below and/or attached an Office communication concerning this application or proceeding.

The time period for reply, if any, is set in the attached communication.

UNITED STATES PATENT AND TRADEMARK OFFICE

Commissioner for Patents
United States Patent and Trademark Office
P.O. Box 1450
Alexandria, VA 22313-1450
www.uspto.gov

MAILED

APR 03 2009

TECHNOLOGY CENTER 2100

Rene' A. Pereyra
Merchant & Gould P.C.
P.O. Box 2903
Minneapolis, Minnesota 55402-0903

In re Application of: Palekar, A., et al.
Appl. No.: **10/157,806**
Filed: May 03, 2002
Atty Docket No.: 14917.0430US01
Title of Invention: TLS TUNNELING

DECISION ON PETITION
UNDER 37 CFR § 1.59

This is a decision on the petition under 37 CFR § 1.59(b), filed on 10 March 2009, to expunge information submitted pursuant to MPEP § 724.05.

The petition is **GRANTED**.

Petitioner requests that the information submitted on 11 December 2007 be expunged from the record if found not to be important to a reasonable examiner in deciding whether to allow the application to issue as a patent and no further fee is required based on previous decision on petition dated December 27, 2007.

The test for expunging material is whether or not the information is material to the patentability of the claims. A review of the material has found that the material is not material to the patentability of the claims. Therefore, the petition is granted.

Applicant is required to retain the expunged material(s) for the life of any patent which issues on the above-identified application.

The expunged material has been destroyed, the artifact folder closed and therefore the material will not be returned.

Any inquiry concerning this decision should be directed to the undersigned whose telephone number is (571) 272-3612.

Beatriz Prieto for

/Tod Swann/
WQAS, Technology Center 2400
Network, Multiplex, Cable and Security

UNITED STATES PATENT AND TRADEMARK OFFICE

COMMISSIONER FOR PATENTS
UNITED STATES PATENT AND TRADEMARK OFFICE
WASHINGTON, D.C. 20231
www.uspto.gov

APPLICATION NUMBER	FILING/RECEIPT DATE	FIRST NAMED APPLICANT	ATTORNEY DOCKET NUMBER
10/157,826	05/31/2002	Takuji Okamoto	03500.016458

CONFIRMATION NO. 5819

FORMALITIES LETTER

"OC000000008383070"

5514
FITZPATRICK CELLA HARPER & SCINTO
30 ROCKEFELLER PLAZA
NEW YORK, NY 10112

OIPE JC68
AUG 27 2002
PATENT & TRADEMARK OFFICE

Date Mailed: 07/01/2002

NOTICE TO FILE MISSING PARTS OF NONPROVISIONAL APPLICATION

FILED UNDER 37 CFR 1.53(b)

Filing Date Granted

Items Required To Avoid Abandonment:

An application number and filing date have been accorded to this application. The item(s) indicated below, however, are missing. Applicant is given **TWO MONTHS** from the date of this Notice within which to file all required items and pay any fees required below to avoid abandonment. Extensions of time may be obtained by filing a petition accompanied by the extension fee under the provisions of 37 CFR 1.136(a).

- The oath or declaration is missing.
  A properly signed oath or declaration in compliance with 37 CFR 1.63, identifying the application by the above Application Number and Filing Date, is required.
- To avoid abandonment, a late filing fee or oath or declaration surcharge as set forth in 37 CFR 1.16(l) of $130 for a non-small entity, must be submitted with the missing items identified in this letter.

Items Required To Avoid Processing Delays:

The item(s) indicated below are also required and should be submitted with any reply to this notice to avoid further processing delays.

SUMMARY OF FEES DUE:

Total additional fee(s) required for this application is **$130** for a Large Entity

- **$130** Late oath or declaration Surcharge.

A copy of this notice MUST be returned with the reply.

T. Petros

Customer Service Center
Initial Patent Examination Division (703) 308-1202
PART 2 - COPY TO BE RETURNED WITH RESPONSE

OIPE
AUG 27 2002
PATENT & TRADEMARK OFFICE

03500.016458

PATENT APPLICATION

IN THE UNITED STATES PATENT AND TRADEMARK OFFICE

In re Application of:	)	Examiner: Unassigned
TAKUJI OKAMOTO, ET AL.	)	Group Art Unit: 2834
Application No.: 10/157,826	)	
Filed: May 31, 2002	)	
For: VIBRATION MEMBER AND VIBRATION WAVE DRIVING APPARATUS	)	August 27, 2002

Commissioner For Patents
BOX MISSING PARTS
Washington, D.C. 20231

RESPONSE TO NOTICE TO FILE MISSING PARTS
OF NONPROVISIONAL APPLICATION

Sir:

In response to the NOTICE TO FILE MISSING PARTS OF NONPROVISIONAL APPLICATION, dated July 1, 2002, Applicants have filed herewith a Combined Declaration and Power of Attorney form in compliance with 37 C.F.R. §1.63. As required, a check in the amount of $130.00 is enclosed to cover the surcharge fee under 37 C.F.R. §1.16(e).

A copy of the Notice to File Missing Parts of Nonprovisional Application is attached to this response, as required.

The Commissioner is authorized to charge any additional fees or credit any overpayment to Deposit Account No. 06-1205. A duplicate of the document is attached for that purpose.

Applicants' undersigned attorney may be reached in our Washington, D.C. office by telephone at (202) 530-1010. All correspondence should to be directed to our below listed address.

Respectfully submitted,

Attorney for Applicants

Registration No. 32,078

FITZPATRICK, CELLA, HARPER & SCINTO
30 Rockefeller Plaza
New York, New York 10112-3801
Facsimile: (212) 218-2200
CPW\gmc

DC_MAIN 106937v1

UNITED STATES PATENT AND TRADEMARK OFFICE

Commissioner for Patents
United States Patent and Trademark Office
P.O. Box 1450
Alexandria, VA 22313-1450
www.uspto.gov

NOVARTIS
CORPORATE INTELLECTUAL PROPERTY
ONE HEALTH PLAZA 104/3
EAST HANOVER NJ 07936-1080

COPY MAILED
JUL 28 2006
OFFICE OF PETITIONS

In re Application of
Kathryn Rene Bracken et al.
Application No. 10/157,899
Filed: May 31, 2002
Attorney Docket No.: 4-32018A

ON PETITION

This is a decision on the petition filed June 5, 2006 under 37 CFR 1.137(b),[1] to revive the above-identified application.

The petition is **GRANTED**.

This application became abandoned for failure to timely reply to the non-Final Office Action mailed October 3, 2005. A shortened statutory period of three months was set for replying to the non-Final Office Action. No extensions of time having been requested, this application became abandoned January 4, 2006. Accordingly, a Notice of Abandonment was mailed on April 25, 2006.

There is, however, no indication that petitioner herein was ever empowered to prosecute the instant application. If petitioner desires to receive future correspondence regarding this application, the appropriate power of attorney documentation must be submitted. A courtesy copy of this decision will be mailed to petitioner. However, all future correspondence will be directed to the address of record until such time as appropriate instructions are received to the contrary.

---

[1]Effective December 1, 1997, the provisions of 37 CFR 1.137(b) now provide that where the delay in reply was unintentional, a petition may be filed to revive an abandoned application or a lapsed patent pursuant to 37 CFR 1.137(b). A grantable petition filed under the provisions of 37 CFR 1.137(b) must be accompanied by:

(1) the required reply, unless previously filed. In a nonprovisional application abandoned for failure to prosecute, the required reply may be met by the filing of a continuing application. In a nonprovisional application filed on or after June 8, 1995, and abandoned for failure to prosecute, the required reply may also be met by the filing of a request for continued examination in compliance with § 1.114. In an application or patent, abandoned or lapsed for failure to pay the issue fee or any portion thereof, the required reply must be the payment of the issue fee or any outstanding balance thereof. In an application abandoned for failure to pay the publication fee, the required reply must include payment of the publication fee.

(2) the petition fee as set forth in 37 CFR 1.17(m);

(3) a statement that the entire delay in filing the required reply from the due date for the reply until the filing of a grantable petition pursuant to 37 CFR 1.137(b) was unintentional. The Commissioner may required additional information where there is a question whether the delay was unintentional; and

(4) any terminal disclaimer (and fee as set forth in 37 CFR 1.20(d)) required pursuant to 37 CFR 1.137(c)).

This matter is being referred to Technology Center 1647 for appropriate action on the amendment filed June 5, 2006.

Telephone inquiries concerning this matter should be directed to the undersigned Petitions Attorney at (571) 272-3212.

Patricia Faison-Ball
Senior Petitions Attorney
Office of Petitions

cc:

BELL, BOYD & LLOYD, LLC
P. O. BOX 1135
CHICAGO, IL 60690-1135

UNITED STATES PATENT AND TRADEMARK OFFICE

Commissioner for Patents
United States Patent and Trademark Office
P.O. Box 1450
Alexandria, VA 22313-1450
www.uspto.gov

MAILED

MAY 10 2010

OFFICE OF PETITIONS

FISH & RICHARDSON P.C.
PO BOX 1022
MINNEAPOLIS, MN 55440-1022

In re Patent of Fu et al.	:	DECISION ON REQUEST
Patent No. 7,574,139	:	FOR RECONSIDERATION OF
Issue Date: August 11, 2009	:	PATENT TERM ADJUSTMENT
Application No. 10/157,900	:	AND NOTICE OF INTENT TO
Filing Date: May 31, 2002	:	ISSUE CERTIFICATE OF
Atty. Docket No. 13854-0068001/79569-9	:	CORRECTION

This is a decision on the petition filed October 13, 2009, which is being treated as a petition under 37 C.F.R. § 1.705(d) requesting the patent term adjustment indicated on the patent be corrected to indicate the term of the patent is extended or adjusted by one thousand six hundred fifty-nine (1659) days.

The petition to correct the patent term adjustment indicated on the patent to indicate the term of the patent is extended or adjusted by one thousand six hundred fifty-nine (1659) days is **GRANTED to the extent indicated herein**.

The Office will *sua sponte* issue a certificate of correction. Pursuant to 37 C.F.R. § 1.322, the Office will not issue a certificate of correction without first providing assignee or patentee an opportunity to be heard. Accordingly, patentees are given **one (1) month or thirty (30) days,** whichever is longer, from the mail date of this decision to respond. No extensions of time will be granted under 37 C.F.R. § 1.136.

Patentees contend the period of time beginning June 1, 2005, the day after the date three years after the filing date of the application, and ending on August 11, 2009, the date the patent issued, is 1,331 days.

Patentees recognize the period of time consumed by continued examination is not part of the period of delay under 35 U.S.C. § 154(b)(1)(B) ("B Delay"). Patentees state the period of time to be excluded for continued examination is 768 days. The Office has determined the period of time consumed by continued examination is 839 days which is the number of days beginning April 26, 2007, the date a Request for Continued Examination was filed, and ending on August 11, 2009, the date the patent issued.

Patentees recognize the period of time consumed by appellate review is not part of the period of B Delay. Patentees contend the period of time to be excluded for appellate review is 27 days.

The Office has determined the period of time consumed by appellate review is 28 days which is the period of time starting January 5, 2007, the date a Notice of Appeal was filed, and ending February 1, 2007, the date the Office mailed a final Office action.

The period of B Delay is 464 days, which is 1,331 days reduced by 839 days consumed by continued examination and 28 days of appellate review.

Patentees contend, and the Office agrees, the number of days of overlap between the period of delay under 35 U.S.C. § 154(b)(1)(A) ("A Delay") and the period of B Delay is 406 days.

In view of the prior discussion, the total patent term adjustment is 1,385 days, which is the sum of 1331 days of A Delay and 464 days of B Delay reduced by 406 days of overlap and 4 days for Patentees' delay.

The Office acknowledges submission of the $200.00 fee set forth in 37 C.F.R. § 1.18(e). No additional fees are required.

The application is being forwarded to the Certificates of Correction Branch for issuance of a certificate of correction. The Office will issue a certificate of correction indicating that the term of the patent is extended or adjusted by **one thousand three hundred eighty-five (1385) days**.

Telephone inquiries specific to this decision should be directed to Senior Petitions Attorney Steven Brantley at (571) 272-3203.

Charles Steven Brantley
Senior Petitions Attorney
Office of Petitions

Enclosure: Copy of DRAFT Certificate of Correction

UNITED STATES PATENT AND TRADEMARK OFFICE

CERTIFICATE OF CORRECTION

PATENT NO.	:	7,574,139 B2
ISSUE DATE	:	August 11, 2009
INVENTOR(S)	:	Fu et al.

DRAFT

It is certified that error appears in the above-identified patent and that said Letters Patent is hereby corrected as shown below:

On the cover page,

[*] Notice: Subject to any disclaimer, the term of this patent is extended or adjusted under 35 U.S.C. 154(b) by 1327 days.

Delete the phrase "by 1327 days" and insert - by 1385 days--

DATE 8/29/07 APPLICATION NUMBER 10/157,904

DOC CODE PETDEC.TC DOC DATE 8/30/07

DELIVER THE ATTACHED FIFLE/DOCUMENT TO THE TC SCANNING CENTER

CONTRACTOR: THE ATTACHED FILE/DOCUMENT MUST BE INDEXED AND SCANNED INTO IFW WITHIN **8** WORK HOURS; UPLOADING OF THE SCANNED IMAGES SHOULD OCCUR NO LATER THAN **16** WORK HOURS FOLLOWING RECEIPT OF THIS REQUEST

AFTER SCANNING, ORIGINAL DOCUMENTS SHOULD BE BOXED IN ACCORDANCE WITH INSTRUCTIONS

UNITED STATES PATENT AND TRADEMARK OFFICE

Commissioner for Patents
United States Patent and Trademark Office
P.O. Box 1450
Alexandria, VA 22313-1450
www.uspto.gov

OBLON, SPIVAK, MCCLELLAND, MAIER & NEUSTADT, P.C.
1940 DUKE STREET
ALEXANDRIA VA 22314

COPY MAILED

AUG 30 2007

OFFICE OF PETITIONS

In re Application of :
Motoyama etal. :
Application No. 10/157,904 : ON PETITION
Filed: May 31, 2002 :
For: METHOD AND APPARATUS FOR PROVIDING MULTIPLE VENDOR SUPPORT TO REMOTELY MONITORED DEVICES :

This is a decision on the petition filed July 23, 2007, which is being treated as a petition under 37 CFR 1.181(a)(3) requesting that the Director exercise his supervisory authority and withdraw the holding of abandonment mailed June 26, 2007.

The petition is **granted.**

Petitioner asserts that the "e-notification" of the Notice of Allowance dated February 27, 2007, was not received, and that a subsequent conversation with the Electronic Business Center (EBC) of the USPTO indicates that by way of a programming error at the USPTO, the e-notification specific to the Notice of Allowance was not sent.

The EBC has confirmed that while an e-notification was sent for the Rescission Notification of February 22, 2007, inspection of the IFW immediately thereafter would not have revealed the subsequently scanned and entered Notice of Allowance, and, as correctly noted by petitioner, a subsequent, separate e-notification specific to the Notice of Allowance was never generated. The USPTO regrets the error and inconvenience, and that software fault has been corrected.

This application is being referred to the Technology Center for remailing the Notice of Allowance and restarting the period for reply.

Telephone inquiries related to this decision should be directed to the undersigned at (571) 272-3217.

Brian Hearn
Petitions Examiner

UNITED STATES PATENT AND TRADEMARK OFFICE

Commissioner for Patents
United States Patent and Trademark Office
P.O. Box 1450
Alexandria, VA 22313-1450
www.uspto.gov

BACON & THOMAS
625 SLATERS LANE
FOURTH FLOOR
ALEXANDRIA, VA 22314

COPY MAILED

FEB 11 2005

OFFICE OF PETITIONS

In re Application of	:	
Kuo-Rong Chen et al	:	
Application No. 10/157,922	:	NOTICE
Filed: May 31, 2002	:	
Attorney Docket No. CHEN3384/EM	:	

This is a notice regarding your request for acceptance of a fee deficiency submission under 37 CFR 1.28. On September 1, 1998, the Court of Appeals for the Federal Circuit held that 37 CFR 1.28(c) is the sole provision governing the time for correction of the erroneous payment of the issue fee as a small entity. **See DH Technology v. Synergystex International, Inc. 154 F.3d 1333, 47 USPQ2d 1865 (Fed. Cir. Sept. 1, 1998).**

The Office no longer investigates or rejects original or reissue applications under 37 CFR 1.56. **1098 Off. Gaz. Pat. Office 502 (January 3, 1989)**. Therefore, nothing in this Notice is intended to imply that an investigation was done.

Your fee deficiency submission under 37 CFR 1.28 is hereby **ACCEPTED**.

Inquiries related to this communication should be directed to the Office of Petitions Staff at (703) 305-9285.

This matter is being referred to Publishing Division.

Wan Laymon
Petitions Examiner
Office of Petitions
Office of the Deputy Commissioner
for Patent Examination Policy

UNITED STATES PATENT AND TRADEMARK OFFICE

Commissioner for Patents
United States Patent and Trademark Office
P.O. Box 1450
Alexandria, VA 22313-1450
www.uspto.gov

WAGNER, MURABITO & HAO LLP
THIRD FLOOR
TWO NORTH MARKET STREET
SAN JOSE, CA 95113

COPY MAILED
FEB 02 2006
OFFICE OF PETITIONS

In re Application of	:	
Zheng MI, et al.	:	
Application No. 10/157,939	:	ON PETITION
Filed: May 28, 2002	:	
Attorney Docket No. ORCL-2001-245-01	:	

This is a decision on the petition, filed January 31, 2006, under 37 CFR 1.313(c)(2) to withdraw the above-identified application from issue after payment of the issue fee.

The petition is **GRANTED**.

The above-identified application is withdrawn from issue for consideration of a submission under 37 CFR 1.114 (request for continued examination). See 37 CFR 1.313(c)(2).

Petitioner is advised that the issue fee paid on January 24, 2006, using a Certificate of Mailing or Transmission under 37 CFR 1.8 dated January 20, 2006, in the above-identified application cannot be refunded. If, however, the above-identified application is again allowed, petitioner may request that it be applied towards the issue fee required by the new Notice of Allowance. [1]

Telephone inquiries relating to this decision should be directed to the undersigned at (571) 272-3204.

The application is being forwarded to Technology Center AU 2189 for further processing of the request for continued examination under 37 CFR 1.114.

Sherry D. Brinkley
Petitions Examiner
Office of Petitions

[1] The request to apply the issue fee to the new Notice may be satisfied by completing and returning the new Issue Fee Transmittal Form PTOL-85(b), which includes the following language thereon: "Commissioner for Patents is requested to apply the Issue Fee and Publication Fee (if any) or re-apply any previously paid issue fee to the application identified above." Petitioner is advised that, whether a fee is indicated as being due or not, the Issue Fee Transmittal Form **must** be completed and timely submitted to avoid abandonment. Note the language in bold text on the first page of the Notice of Allowance and Fee(s) Due (PTOL-85).

UNITED STATES PATENT AND TRADEMARK OFFICE

COMMISSIONER FOR PATENTS
UNITED STATES PATENT AND TRADEMARK OFFICE
WASHINGTON, D.C. 20231
www.uspto.gov

Paper No. 6

Michael L. Goldman
NIXON PEABODY LLP
Clinton Square
P.O. Box 31051
Rochester NY 14603

COPY MAILED

NOV 0 1 2002

OFFICE OF PETITIONS

In re Application of
Moon, Davis, Galvin, Schultz, Corso, and Lowes
Application No. 10/157,957
Filed: May 31, 2002
Attorney Docket No. 200701/1039
For: INTEGRATED MONOLITHIC MICROFABRICATED ELECTROSPRAY AND LIQUID CHROMATOGRAPHY SYSTEM AND METHOD

: DECISION REFUSING STATUS
: UNDER 37 CFR 1.47(a)

This is a decision on the petition under 37 CFR 1.47(a), filed August 15, 2002.

The petition under 37 CFR 1.47(a) is **dismissed.**

Any request for reconsideration under this decision must be submitted within TWO (2) MONTHS from the mail date of this decision. Extensions of time under 37 CFR 1.136(a) are permitted. Any response should be titled "Request for Reconsideration of Petition Under 37 CFR 1.47(a). Failure to respond will result in abandonment of the application. Extensions of time are available and will be governed by 37 CFR 1.136(a).

The above-cited application was filed without a properly executed oath or declaration. In response, the Office mailed a "Notice to File Missing Part of Non-Provisional Application" (the "Notice") on June 28, 2002. The Notice set forth a period for reply of two months. On August 15, 2002, in response to the Notice, petitioner filed the instant petition and a declaration under 37 CFR 1.63 signed by three of six named inventors.

A grantable petition under 37 CFR 1.47(a) requires:

(1) proof that the non-signing inventor cannot be reached or refuses to sign the oath or declaration after having been presented with the application papers (specification, claims, and drawings);

(2) an acceptable oath or declaration in compliance with 35 U.S.C. §§ 115 and 116;

(3) the petition fee; and,

(4) a statement of the last known address of the non-signing inventor.

Petitioner lacks item (1) as set forth above.

As to item (1), petitioner has not established that a bona fide attempt was made to present the non-signing inventors with the application papers. It is noted that petitioner sent the application papers for the non-signing inventors review to who petitioner believed to be the attorney for the non-signing inventors. Petitioner indicates that this belief is based on said attorney's representation of non-signing inventors in other patent applications. Before the refusal of the non-signing inventors to join the application can be alleged, petitioner must establish that a bona fide attempt to present the non-signing inventors with the application papers. It cannot be said that a bona fide attempt was made where, as in this case, the

application papers are presented to an attorney that petitioner is not sure is the attorney representing the non-signing inventors, and only circumstantial evidence is provided to support the assertion that the person to whom the application papers were sent is the attorney for the non-signing inventor. With any renewed petition filed, petitioner must provide affirmative evidence that the attorney to whom the application papers were sent is, in fact, the attorney representing the non-signing inventors in the prosecution of the above-cited patent application.

Petitioner's concern relative to sending the application papers to the non-signing inventors at their last known addresses is noted, however 37 CFR 1.47 only requires that petitioner present a complete copy of the application papers to the inventors. It does not require petitioner to discuss the matter with the non-signing inventors. Receipt of the application papers by the non-signing inventors at their last known addresses in no way restricts the non-signing inventors from taking the application papers to their respective attorneys or simply refusing to join the application outright. If petitioner is not able to confirm that the attorney to whom the application papers were sent is the attorney for the non-signing inventors, 37 CFR 1.47 requires only that petitioner present proof that the complete application papers were sent to the non-signing inventors at their last known addresses.

Further correspondence with respect to this matter should be addressed as follows:

By mail: Commissioner for Patents
Box DAC
Washington, DC 20231

By FAX: (703) 308-6916
Attn: Office of Petitions

By hand: Crystal Plaza Four, Suite 3C23
2201 South Clark Place
Arlington, Virginia

Telephone inquiries should be directed to the undersigned at (703) 305-0010.

Kenya A. McLaughlin

Kenya A. McLaughlin
Petitions Attorney
Office of Petitions
Office of the Deputy Commissioner
for Patent Examination Policy

UNITED STATES PATENT AND TRADEMARK OFFICE

COMMISSIONER FOR PATENTS
UNITED STATES PATENT AND TRADEMARK OFFICE
WASHINGTON, D.C. 20231
www.uspto.gov

Paper No. 8

Michael Goldman
Nixon Peabody, LLP
Clinton Quare
PO Box 31051
Rochester, NY 14603

COPY MAILED

FEB 26 2003

OFFICE OF PETITIONS

In re Application of
Moon, Davis, Galvin, Schultz, Corso, and Lowes
Application No.: 10/157,957
Filed: May 31, 2002
Attorney Docket No: 200701/1039
For: INTEGRATED MONOLITHIC MICROFABRICTED ELECTROSPRAY AND LIQUID CHROMATOGRAPHY SYSTEM AND METHOD

DECISION ACCORDING STATUS UNDER RULE 47(a)

This is in response to the renewed petition under 37 CFR 1.47(a), first filed on January 6, 2003, with a certificate of mailing dated December 30, 2002, and received by the Office of Petitions on February 4, 2003.

The renewed petition is **GRANTED**.

Petitioner maintains that petitioner has established that the non-signing inventor cannot be reached or refuses to sign the oath or declaration after having been presented with the complete application papers. Petitioner further maintains that identical petitions under 37 CFR 1.47 were previously filed in several other continuation applications, and these petitions were granted.

It should be noted that the undersigned was not the author of the previous decisions granting the petitions under 37 CFR 1.47 in the continuation applications and that the undersigned was not privy to the decisions at the time the dismissal mailed November 1, 2002, was written. As a matter of record, it should further be noted that the undersigned remains unpersuaded that a bona fide attempt was made to present the non-signing inventors with a complete copy of the application papers. Notwithstanding the aforementioned, and for the sake of consistency throughout related applications, the above-cited application is hereby accorded Rule 1.47(a) status.

As provided in Rule 1.47(c), this Office will forward notice of this application's filing to the non-signing inventor at the address given in the petition. Notice of the filing of this application will also be published in the Official Gazette.

This application will be forwarded to the Office of Initial Patent Examination for further processing.

Telephone inquiries should be directed to the undersigned at (703) 305-0010.

Kenya A. McLaughlin

Kenya A. McLaughlin
Petitions Attorney
Office of Petitions

UNITED STATES PATENT AND TRADEMARK OFFICE

COMMISSIONER FOR PATENTS
UNITED STATES PATENT AND TRADEMARK OFFICE
WASHINGTON, D.C. 20231
www.uspto.gov

Timothy J. Davis
2283 State Route 96
Trumansburg, NY 14886

COPY MAILED

FEB 26 2003

LETTER OFFICE OF PETITIONS

In re Application of
Moon, Davis, Galvin, Schultz, Corso, and Lowes
Application No. 10/157,957
Filed: May 31, 2002
Attorney Docket Number: 200701/1039
For: INTEGRATED MONOLITHIC MICROFABRICTAED ELECTROSPRAY AND LIQUID CHROMATOGRAPHY SYSTEM AND METHOD

Dear Mr. Davis:

You are named as a joint inventor in the above-identified United States patent application filed under the provisions of 35 U.S.C. 116 (United States Code) and 37 CFR 1.47(a), Rules of Practice in Patent Cases. Should a patent be granted on the application you will be designated therein as a joint inventor.

As the a joint inventor, you are entitled to inspect any paper in the file wrapper of the application, order copies of all or any part thereof (at a prepaid cost per 37 CFR 1.19) or make your position of record in the application. Alternatively, you may arrange to do any of the preceding through a registered patent attorney or agent presenting written authorization from you. If you care to join the application, counsel of record (see below) would presumably assist you. Joining in the application would entail the filing of an appropriate oath or declaration by you pursuant to 37 CFR 1.63.

Telephone inquiries regarding this communication should be directed to Petitions Attorney Kenya A. McLaughlin at (703) 305-0010. Requests for information regarding your application should be directed to the File Information Unit at (703) 308-2733. Information regarding how to pay for and order a copy of the application, or a specific paper in the application, should be directed to Certification Division at (703) 308-9726 or 1-800-972-6382 (outside the Washington D.C. area).

Kenya A. McLaughlin

Kenya A. McLaughlin
Petitions Attorney
Office of Petitions

Michael Goldman
Nixon Peabody, LLP
PO Box 31052
Rochseter, NY 14603

UNITED STATES PATENT AND TRADEMARK OFFICE

COMMISSIONER FOR PATENTS
UNITED STATES PATENT AND TRADEMARK OFFICE
WASHINGTON, D.C. 20231
www.uspto.gov

Gregory J. Galvin
124 E. King Road
Ithaca, NY 14850

In re Application of
Moon, Davis, Galvin, Schultz, Corso, and Lowes
Application No. 10/157,957
Filed: May 31, 2002
Attorney Docket Number: 200701/1039
For: INTEGRATED MONOLITHIC MICROFABRICTAED ELECTROSPRAY AND LIQUID CHROMATOGRAPHY SYSTEM AND METHOD

LETTER

COPY MAILED
FEB 26 2003
OFFICE OF PETITIONS

Dear Mr. Galvin:

You are named as a joint inventor in the above-identified United States patent application filed under the provisions of 35 U.S.C. 116 (United States Code) and 37 CFR 1.47(a), Rules of Practice in Patent Cases. Should a patent be granted on the application you will be designated therein as a joint inventor.

As the a joint inventor, you are entitled to inspect any paper in the file wrapper of the application, order copies of all or any part thereof (at a prepaid cost per 37 CFR 1.19) or make your position of record in the application. Alternatively, you may arrange to do any of the preceding through a registered patent attorney or agent presenting written authorization from you. If you care to join the application, counsel of record (see below) would presumably assist you. Joining in the application would entail the filing of an appropriate oath or declaration by you pursuant to 37 CFR 1.63.

Telephone inquiries regarding this communication should be directed to Petitions Attorney Kenya A. McLaughlin at (703) 305-0010. Requests for information regarding your application should be directed to the File Information Unit at (703) 308-2733. Information regarding how to pay for and order a copy of the application, or a specific paper in the application, should be directed to Certification Division at (703) 308-9726 or 1-800-972-6382 (outside the Washington D.C. area).

Kenya A. McLaughlin

Kenya A. McLaughlin
Petitions Attorney
Office of Petitions

Michael Goldman
Nixon Peabody, LLP
PO Box 31052
Rochseter, NY 14603

UNITED STATES PATENT AND TRADEMARK OFFICE

COMMISSIONER FOR PATENTS
UNITED STATES PATENT AND TRADEMARK OFFICE
WASHINGTON, D.C. 20231
www.uspto.gov

James Moon
122 E. Remington Road
Ithaca, NY 14850

In re Application of
Moon, Davis, Galvin, Schultz, Corso, and Lowes
Application No. 10/157,957
Filed: May 31, 2002
Attorney Docket Number: 200701/1039
For: INTEGRATED MONOLITHIC MICROFABRICTAED ELECTROSPRAY AND LIQUID CHROMATOGRAPHY SYSTEM AND METHOD

LETTER

COPY MAILED
FEB 26 2003
OFFICE OF PETITIONS

Dear Mr. Moon:

You are named as a joint inventor in the above-identified United States patent application filed under the provisions of 35 U.S.C. 116 (United States Code) and 37 CFR 1.47(a), Rules of Practice in Patent Cases. Should a patent be granted on the application you will be designated therein as a joint inventor.

As the a joint inventor, you are entitled to inspect any paper in the file wrapper of the application, order copies of all or any part thereof (at a prepaid cost per 37 CFR 1.19) or make your position of record in the application. Alternatively, you may arrange to do any of the preceding through a registered patent attorney or agent presenting written authorization from you. If you care to join the application, counsel of record (see below) would presumably assist you. Joining in the application would entail the filing of an appropriate oath or declaration by you pursuant to 37 CFR 1.63.

Telephone inquiries regarding this communication should be directed to Petitions Attorney Kenya A. McLaughlin at (703) 305-0010. Requests for information regarding your application should be directed to the File Information Unit at (703) 308-2733. Information regarding how to pay for and order a copy of the application, or a specific paper in the application, should be directed to Certification Division at (703) 308-9726 or 1-800-972-6382 (outside the Washington D.C. area).

Kenya A. McLaughlin
Petitions Attorney
Office of Petitions

Michael Goldman
Nixon Peabody, LLP
PO Box 31052
Rochseter, NY 14603

UNITED STATES PATENT AND TRADEMARK OFFICE

COMMISSIONER FOR PATENTS
UNITED STATES PATENT AND TRADEMARK OFFICE
WASHINGTON, D.C. 20231
www.uspto.gov

Gregory J. Galvin
124 E. King Road
Ithaca, NY 14850

In re Application of
Moon, Davis, Galvin, Schultz, Corso, and Lowes
Application No. 10/157,957
Filed: May 31, 2002
Attorney Docket Number: 200701/1039
For: INTEGRATED MONOLITHIC MICROFABRICTAED ELECTROSPRAY AND LIQUID CHROMATOGRAPHY SYSTEM AND METHOD

LETTER

COPY MAILED
FEB 26 2003
OFFICE OF PETITIONS

Dear Mr. Galvin:

You are named as a joint inventor in the above-identified United States patent application filed under the provisions of 35 U.S.C. 116 (United States Code) and 37 CFR 1.47(a), Rules of Practice in Patent Cases. Should a patent be granted on the application you will be designated therein as a joint inventor.

As the a joint inventor, you are entitled to inspect any paper in the file wrapper of the application, order copies of all or any part thereof (at a prepaid cost per 37 CFR 1.19) or make your position of record in the application. Alternatively, you may arrange to do any of the preceding through a registered patent attorney or agent presenting written authorization from you. If you care to join the application, counsel of record (see below) would presumably assist you. Joining in the application would entail the filing of an appropriate oath or declaration by you pursuant to 37 CFR 1.63.

Telephone inquiries regarding this communication should be directed to Petitions Attorney Kenya A. McLaughlin at (703) 305-0010. Requests for information regarding your application should be directed to the File Information Unit at (703) 308-2733. Information regarding how to pay for and order a copy of the application, or a specific paper in the application, should be directed to Certification Division at (703) 308-9726 or 1-800-972-6382 (outside the Washington D.C. area).

Kenya A. McLaughlin

Kenya A. McLaughlin
Petitions Attorney
Office of Petitions

Michael Goldman
Nixon Peabody, LLP
PO Box 31052
Rochseter, NY 14603

RECEIVED
MAR 13 2003
OFFICE OF PETITIONS

UNITED STATES PATENT AND TRADEMARK OFFICE

COMMISSIONER FOR PATENTS
UNITED STATES PATENT AND TRADEMARK OFFICE
WASHINGTON, D.C. 20231
www.uspto.gov

Paper No. 5

Michael L. Goldman
NIXON PEABODY LLP
Clinton Square
P.O. Box 31051
Rochester NY 14603

COPY MAILED

OCT 16 2002

OFFICE OF PETITIONS

In re Application of
Moon, Davis, Galvin, Schultz, Corso & Lowes
Application No. 10/157,958
Filed: May 31, 2002
Attorney Docket No 200701/1038.
For: INTEGRATED MONOLITHIC MICROFABRICATED ELECTROSPRAY AND LIQUID CHROMATOGRAPHY SYSTEM AND METHOD

: DECISION ACCORDING STATUS
: UNDER 37 CFR 1.47(a)

This is in response to the petition under 37 CFR 1.47(a), filed July 23, 2002 (certificate of mailing date July 19, 2002).

The petition is granted.

Petitioners have shown that non-signing inventors, James E. Moon, Timothy J. Davis, and Gregory J. Galvin, have constructively refused to join in the filing of the above-identified application after having been presented with the application papers. Specifically, the petition establishes that the inventors were mailed the application papers, including the specification, claims and drawings via their attorney, but failed to respond to the request that they sign the declaration within a reasonable amount of time. Petitioners have submitted a declaration in compliance with 37 CFR 1.63 and 1.64.

This application and papers have been reviewed and found in compliance with 37 CFR 1.47(a). This application is hereby accorded Rule 1.47(a) status.

As provided in Rule 1.47(c), this Office will forward notice of this application's filing to the non-signing inventor at the address given in the petition. Notice of the filing of this application will also be published in the Official Gazette.

Office financial records indicate that petitioners were charged the $130.00 surcharge twice because two copies of the declaration were filed on different dates. Pursuant to petitioners' authorization, deposit account no. 14-1138 will be credited one of those fees.

After this decision is mailed, the above-identified application will be forwarded to Technology Center 1700 for examination in due course.

Telephone inquiries should be directed to the undersigned at (703) 308-6712.

E. Shirene Willis

E. Shirene Willis
Senior Petitions Attorney
Office of Petitions
Office of the Deputy Commissioner
for Patent Examination Policy

UNITED STATES PATENT AND TRADEMARK OFFICE

COMMISSIONER FOR PATENTS
UNITED STATES PATENT AND TRADEMARK OFFICE
P.O. BOX 1450
ALEXANDRIA, VA 22313-1450
www.uspto.gov

MAIL

DEC 0 2 2004

DIRECTOR OFFICE
TECHNOLOGY CENTER 2600

McGuire Woods
Suite 1800
1750 Tysons Boulevard
McLean VA 22102-4215

In re Application of :
Joon-Koo KIM, et al. :
Application No. 10/158,013 :
Filed: May 31, 2002 :
For: METHOD OF RESETTING PLASMA DISPLAY PANEL FOR IMPROVED CONTRAST :

DECISION ON PETITION TO MAKE SPECIAL

This is a decision on the petition to make special filed November 1, 2004 under Manual of Patent Examination Procedure §708.02, VIII requesting accelerated examination.

The petition under Manual of Patent Examination Procedure §708.02, VIII, must:
(1) be filed prior to receiving any examination by the examiner,
(2) be accompanied by the required fee- $130,
(3) the claims should be directed to a single invention (if it is determined that the claims pertain to more than one invention, then applicant will have to make an election without traverse or forfeit accelerated examination status),
(4) state that a pre-examination search was made, and fully discuss the search method employed, such as classes and subclasses searched, publications, Chemical abstracts, patents, etc. A search made by a foreign patent office satisfies this requirement,
(5) be accompanied by a copy of each of the references most closely related to the subject matter encompassed by the claims if said references are not already of record,
(6) fully discuss the references, pointing out with the particularity required by 37 C.F.R. §1.111 (b) and (c), how the claimed subject matter is patentable over the references.

The petition meets all the above-listed requirements. Accordingly, the petition is **GRANTED**.

The application will retain its special status throughout its entire prosecution, including any appeal to the Board of Patent Appeals and Interferences, subject only to diligent prosecution by the applicant. The application file is being forwarded to the examiner for appropriate action in due course.

Kenneth A. Wieder
Special Program Examiner
Technology Center 2600
Communications

UNITED STATES PATENT AND TRADEMARK OFFICE

COMMISSIONER FOR PATENTS
UNITED STATES PATENT AND TRADEMARK OFFICE
P.O. BOX 1450
ALEXANDRIA, VA 22313-1450
www.uspto.gov

Paper No. 6

PATTON BOGGS LLP
ATTORNEYS AT LAW
2550 M Street, NW
Washington, DC 20037-1350

COPY MAILED

OCT 0 9 2003

OFFICE OF PETITIONS

In re Application of
Thomas C. Appling, III
Application No. 10/158,018
Filed: May 31, 2002
Attorney Docket No. 13911.102

DECISION GRANTING PETITION
UNDER 37 CFR 1.137(b)

This is a decision on the petition, filed September 23, 2003, which is being treated as a petition under 37 CFR 1.137(b) to revive the instant nonprovisional application for failure to timely notify the U.S. Patent and Trademark (USPTO) of the filing of an application in a foreign country, or under a multinational treaty that requires publication of applications eighteen months after filing. *See* 37 CFR 1.137(f).

The petition is **GRANTED**.

Petitioner states that the instant nonprovisional application is the subject of an application filed in an eighteen month publication country on May 30, 2003. However, the USPTO was unintentionally not notified of this filing within 45 days subsequent to the filing of the subject application in an eighteen month publication country.

In view of the above, this application became abandoned pursuant to 35 U.S.C. § 122(b)(2)(B)(iii) and 37 CFR 1.213(c) for failure to timely notify the Office of the filing of an application in a foreign country or under a multilateral international agreement that requires publication of applications 18 months after filing.

A petition to revive an application abandoned pursuant to 35 U.S.C. 122(b)(2)(B)(iii) for failure to notify the USPTO of a foreign filing must be accompanied by:

(1) the required reply which is met by the notification of such filing in a foreign country or under a multinational treaty;
(2) the petition fee as set forth in 37 CFR 1.17(m); and
(3) a statement that the entire delay in filing the required reply from the due date of the reply until the filing of a grantable petition was unintentional.

The instant petition has been found to be in compliance with 37 CFR 1.137(b). Accordingly, the failure to timely notify the USPTO of a foreign or international filing within 45 days after the date of filing of such foreign or international application as provided by 35 U.S.C. § 122(b)(2)(B)(iii) and 37 CFR 1.213(c) is accepted as having been unintentionally delayed.

The previous Request and Certification under 35 U.S.C. § 122(b)(2)(B)(i) has been rescinded. A Notice Regarding Rescission of Nonpublication Request which sets forth the projected publication date of January 15, 2004 accompanies this decision on petition.

Any inquiries concerning this decision may be directed to Sherry D. Brinkley at (703) 305-9220.

This application is being forwarded to Technology Center Art Unit 2675 for examination in due course.

Sherry D. Brinkley
Petitions Examiner
Office of Petitions
Office of the Deputy Commissioner
for Patent Examination Policy

Conferee: Frances M. Hicks
Lead Petitions Examiner

ATTACHMENT: Notice Regarding Rescission of Nonpublication Request

UNITED STATES PATENT AND TRADEMARK OFFICE

Commissioner for Patents
United States Patent and Trademark Office
P.O. Box 1450
Alexandria, VA 22313-1450
www.uspto.go

MAILED

MAY 18 2005

DIRECTOR'S OFFICE
TECHNOLOGY CENTER 2600

PATTON BOGGS LLP
2550 M STREET, N.W.
WASHINGTON, D.C. 20037-1350

In re Application of
THOMAS C. APPLING, III
Application No. 10/158,018
Filed: May 31, 2002

For: METHOD AND APPARATUS FOR EFFECTING A PRESENTATION

DECISION ON REQUEST TO WITHDRAW FROM RECORD

This is a decision on the request for withdrawal as agent of record filed on January 14, 2005.

A grantable request to withdraw as attorney/agent of record must:
(1) indicate the present mailing address of the attorney(s)/agent(s) who seek(s) to withdraw, and
(2) be signed by each attorney/agent seeking to withdraw or clearly be signed on their behalf, and
(3) be *approved* at least thirty (30) days prior to the maximum extendable period for response to any outstanding Office Action, and
(4) indicate the address to which future correspondence should be mailed.

Petitioner has met all of the above. Accordingly, the request is **GRANTED**.

Attorneys/agents listed in the Request to withdraw are withdrawn.

All future communications from the Office will be directed to the address listed below until otherwise notified by applicant. Applicant is reminded of the obligation to promptly notify the Patent and Trademark Office of any change in correspondence address to ensure receipt of all communications from the Office.

Kenneth A Wieder
Special Program Examiner
Technology Center 2600
Communications
(571) 272-2986

cc: THOMAS C. APPLING, III
75-260 VIA DOMINGO
PALM DESERT, CA 92211

UNITED STATES PATENT AND TRADEMARK OFFICE

Commissioner for Patents
United States Patent and Trademark Office
P.O. Box 1450
Alexandria, VA 22313-1450
www.uspto.gov

TIMOTHY J KLIMA
HARBIN KING & KLIMA
500 NINTH STREET SE
WASHINGTON DC 20003

COPY MAILED

MAR 0 2 2005

OFFICE OF PETITIONS

In re Application of
Fiorenzo Draghetti et al.
Application No. 10/158,061
Filed: May 31, 2002
Attorney Docket Number: TK315

ON PETITION

This is a decision on the petition under 37 CFR 1.137(b), filed November 5, 2004, to revive the above identified application.

The petition is **GRANTED**.

This application became abandoned for failure to timely reply to the non-Final Office Action mailed March 23, 2004. A shortened statutory period of three months was set for replying to the non-Final Office Action. No extensions of time were requested prior to the abandonment of the application on June 24, 2004. Accordingly, a Notice of Abandonment was mailed October 7, 2004.

Petitioner files the instant petition under 37 CFR 1.137(b). [1]

Receipt of an amendment is acknowledged.

Pursuant to 37 CFR 1.136, however, an extension of time must be filed prior to the expiration of the maximum period obtainable for reply to avoid abandonment. Accordingly, since the $980.00 extension of time fee submitted with the petition on November 5, 2004, was subsequent to the maximum period obtainable for reply, this fee is unnecessary and will be credited to counsel's deposit account no. 50-3272.

---

[1] Effective December 1, 1997, the provisions of 37 CFR 1.137(b) now provide that where the delay in reply was unintentional, a petition may be filed to revive an abandoned application or a lapsed patent pursuant to 37 CFR 1.137(b). A grantable petition filed under the provisions of 37 CFR 1.137(b) must be accompanied by:

(1) the required reply, unless previously filed. In a nonprovisional application abandoned for failure to prosecute, the required reply may be met by the filing of a continuing application. In an application or patent, abandoned or lapsed for failure to pay the issue fee or any portion thereof, the required reply must be the payment of the issue fee or any outstanding balance thereof.

(2) the petition fee as set forth in 37 CFR 1.17(m);

(3) a statement that the entire delay in filing the required reply from the due date for the reply until the filing of a grantable petition pursuant to 37 CFR 1.137(b) was unintentional. The Commissioner may required additional information where there is a question whether the delay was unintentional; and

(4) any terminal disclaimer (and fee as set forth in 37 CFR 1.20(d)) required pursuant to 37 CFR 1.137(c)).

This application is being forwarded to Technology Center 1734 for appropriate action on the amendment filed November 5, 2004.

Telephone inquiries concerning this matter should be directed to the undersigned Petitions Attorney at (571) 272-3212.

Patricia Faison Ball

Patricia Faison-Ball
Senior Petitions Attorney
Office of Petitions

UNITED STATES PATENT AND TRADEMARK OFFICE

Commissioner for Patents
United States Patent and Trademark Office
P.O. Box 1450
Alexandria, VA 22313-1450
www.uspto.gov

Copy only

BLAKELY SOKOLOFF TAYLOR & ZAFMAN
12400 WILSHIRE BOULEVARD
SEVENTH FLOOR
LOS ANGELES CA 90025-1030

COPY MAILED

SEP 24 2004

OFFICE OF PETITIONS

ON PETITION

In re Application of	:	
Mark L. Brown et al	:	
Application No. 10/158,094	:	
Filed: May 29, 2002	:	
Attorney Docket No. 42P13500	:	

This is a decision on the petition, filed September 20, 2004, under 37 CFR 1.313(c)(2) to withdraw the above-identified application from issue after payment of the issue fee.

The petition is **GRANTED**.

The above-identified application is withdrawn from issue for consideration of a submission under 37 CFR 1.114 (request for continued examination). See 37 CFR 1.313(c)(2).

Petitioner is advised that the issue fee paid on August 9, 2004 in the above-identified application cannot be refunded. If, however, the above-identified application is again allowed, petitioner may request that it be applied towards the issue fee required by the new Notice of Allowance.[1]

Telephone inquiries should be directed to the undersigned at (703) 305-8859.

The examiner of Technology Center AU 2187 will consider the request for continued examination under 37 CFR 1.114.

Karen Creasy

Karen Creasy
Petitions Examiner
Office of Petitions
Office of the Deputy Commissioner
for Patent Examination Policy

---

[1] The request to apply the issue fee to the new Notice may be satisfied by completing and returning the new Issue Fee Transmittal Form PTOL-85(b), which includes the following language thereon: "Commissioner for Patents is requested to apply the Issue Fee and Publication Fee (if any) or re-apply any previously paid issue fee to the application identified above." Petitioner is advised that, whether a fee is indicated as being due or not, the Issue Fee Transmittal Form **must** be completed and timely submitted to avoid abandonment. Note the language in bold text on the first page of the Notice of Allowance and Fee(s) Due (PTOL-85).

UNITED STATES PATENT AND TRADEMARK OFFICE

COMMISSIONER FOR PATENT
UNITED STATES PATENT AND TRADEMARK OFFIC
WASHINGTON, D.C. 20231
www.uspto.go

Paper No. 6

KNOBBE MARTENS OLSON & BEAR LLP
2040 MAIN STREET
FOURTEENTH FLOOR
IRVINE, CA 92614

COPY MAILED

FEB 0 7 2003

OFFICE OF PETITIONS

In re Application of
Sheldon Xiaodong Cao et al
Application No. 10/158,103
Filed: May 28, 2002
Attorney Docket No. LGBIOMD.002A

ON PETITION

This is in response to the petition under 37 CFR 1.47(a), filed November 7, 2002.

The petition is dismissed.

Rule 47 applicant is given TWO MONTHS from the mailing date of this decision to reply, correcting the below-noted deficiencies. Any reply should be entitled "Request for Reconsideration of Petition Under 37 CFR 1.47(a)," and should only address the deficiencies noted below, except that the reply may include an oath or declaration executed by the non-signing inventor. **FAILURE TO RESPOND WILL RESULT IN ABANDONMENT OF THE APPLICATION.** Any extensions of time will be governed by 37 CFR 1.136(a).

A grantable petition under 37 CFR 1.47(a) requires: (1) proof that the non-signing inventor cannot be reached or refuses to sign the oath or declaration after having been presented with the application papers (specification, claims and drawings); (2) an acceptable oath or declaration in compliance with 35 U.S.C. §§ 115 and 116; (3) the petition fee; and (4) a statement of the last known address of the non-signing inventor. Applicant lacks items (2) set forth above.

As to item (2), the declaration fails to set forth a signature block for joint inventor Dumas which also includes his citizenship, residence and mailing address. Therefore, the declaration submitted fails to comply with 37 CFR 1.63(a)(2) and (3) and 37 CFR 1.63(c)(1). Accordingly, a declaration in compliance with 37 CFR 1.63 and 1.64 and signed by the signing inventors on behalf of themselves and nonsigning inventor Dumas is REQUIRED. See MPEP 409.03(a).

The power of attorney filed concurrently with the petition is not acceptable until rule 47 status has been granted to this application.

In order to expedite consideration of the petition under 37 CFR 1.47(a), petitioner may wish to submit the renewed petition by facsimile transmission to the telephone number indicated below and to the attention of Irvin Dingle.

Further correspondence with respect to this matter should be addressed as follows:

By mail: U.S. Patent and Trademark Office
P.O. Box 2327
Mailstop DAC
Arlington, VA 22202

Or

Commissioner for Patents
Box DAC
Washington, D.C. 20231

By FAX: (703) 308-6916
Attn: Office of Petitions

By hand: Crystal Plaza Four, Suite 3C23
2201 S. Clark Place
Arlington, VA 22202

Telephone inquiries related to this decision should be directed to Irvin Dingle at (703) 306-5684.

Frances Hicks

Frances Hicks
Lead Petitions Examiner
Office of Petitions
Office of the Deputy Commissioner
for Patent Examination Policy

UNITED STATES PATENT AND TRADEMARK OFFICE

COMMISSIONER FOR PATENT
UNITED STATES PATENT AND TRADEMARK OFFIC
WASHINGTON, D.C. 20231
www.uspto.go

Paper No. 9

KNOBBE MARTENS OLSON & BEAR LLP
2040 MAIN STREET
FOURTEENTH FLOOR
IRVINE, CA 92614

COPY MAILED

MAR 2 0 2003

OFFICE OF PETITIONS

In re Application of	:
Sheldon Xiaodong Cao et al	:
Application No. 10/158,103	: DECISION GRANTING
Filed: May 28, 2002	:STATUS UNDER 37 CFR 1.47(a)
For: LGBIOMD.002A	:
	:

This is in response to the petition filed March 18, 2003, requesting reconsideration of a decision mailed February 7, 2003, which refused to accord 37 CFR 1.47(a) status to the above-identified application.

The petition is granted.

Petitioner has shown that the non-signing inventor has refused to join in the filing of the above-identified application.

The above-identified application and papers have been reviewed and found in compliance with 37 CFR 1.47(a). This application is hereby accorded Rule 1.47(a) status. As provided in Rule 1.47(c), this Office will forward notice of this application's filing to the non-signing inventor at the address given in the petition. Notice of the filing of this application will also be published in the Official Gazette.

Telephone inquiries regarding this decision should be directed to Irvin Dingle at (703) 306-5684.

This application is being forwarded to the Initial Patent Examination Unit.

Frances Hicks

Frances Hicks
Lead Petitions Examiner
Office of Petitions
Office of the Deputy Commissioner
for Patent Examination Policy

UNITED STATES PATENT AND TRADEMARK OFFICE

COMMISSIONER FOR PATENT
UNITED STATES PATENT AND TRADEMARK OFFIC
WASHINGTON, D.C. 20231
www.uspto.go

DAVID PAUL DUMAS
15803 CAMINITO CERADO
SAN DIEGO, CA 92128

COPY MAILED

MAR 2 0 2003

OFFICE OF PETITIONS

In re Application of
Sheldon Xiaodong Cao; David Paul Dumas; Xiaohua Chen; Jae Young Yang
Application No. 10/158,103
Filed: May 28, 2002
For: INHIBITORS OF PROTEIN KINASE FOR THE TREATMENT OF DISEASE

Dear Mr. Dumas:

You are named as a joint inventor in the above identified United States patent application, filed under the provisions of 35 U.S.C. 116 (United States Code), and 37 CFR 1.47(a), Rules of Practice in Patent Cases. Should a patent be granted on the application you will be designated therein as a joint inventor.

As a named inventor you are entitled to inspect any paper in the file wrapper of the application, order copies of all or any part thereof (at a prepaid cost per 37 CFR 1.19) or make your position of record in the application. Alternatively, you may arrange to do any of the preceding through a registered patent attorney or agent presenting written authorization from you. If you care to join in the application, counsel of record (see below) would presumably assist you. Joining in the application would entail the filing of an appropriate oath or declaration by you pursuant to 37 CFR 1.63.

Telephone inquiries regarding this communication should be directed to the Irvin Dingle at (703) 306-5684. Requests for information regarding your application should be directed to the File Information Unit at (703) 308-2733. Information regarding how to pay for and order a copy of the application, or a specific paper in the application, should be directed to Certification Division at (703) 308-9726 or 1 (800) 972-6382 (outside the Washington D.C. area).

Frances Hicks

Frances Hicks
Lead Petitions Examiner
Office of Petitions
Office of the Deputy Commissioner
for Patent Examination Policy

cc:

Knobbe, Martens, Olson & Bear LLP
2040 Main Street, Fourteenth Floor
Irvine, CA 92614

UNITED STATES PATENT AND TRADEMARK OFFICE

COMMISSIONER FOR PATENTS
UNITED STATES PATENT AND TRADEMARK OFFICE
WASHINGTON, D.C. 20231
www.uspto.gov

Paper No. 5

FITZPATRICK CELLA HARPER & SCINTO
30 ROCKEFELLER PLAZA
NEW YORK NY 10112

COPY MAILED

SEP 2 4 2002

OFFICE OF PETITIONS

In re Application of
Kikuchi, et al.
Application No. 10/158,127
Filed: May 31, 2002
Attorney Docket No.00684.002934.1

DECISION GRANTING
PETITION

This is a decision on the petition, filed August 1, 2002, requesting, in effect, withdrawal of the Notice to File Omitted Item(s) in a Nonprovisional Application (Notice), mailed July 15, 2002.

The application was deposited on May 31, 2002. On July 15, 2002, the Office of Initial Patent Examination mailed a Notice informing petitioners that page 50 of the specification appeared to have been omitted.

In response to the Notice, petitioners timely filed the present petition. Petitioners request that page 50 be accorded a filing date of May 31, 2002 on the basis that the entire specification, including allegedly missing page 50, was received in the Patent and Trademark Office (PTO) on May 31, 2002. In support, the petition is accompanied by a copy of applicants' itemized postcard receipt showing an Office of Initial Patent Examination generated barcode citing May 31, 2002 as the date of receipt. The postcard lists, *inter alia*, that the filing included 221 pages of specification. A review of the application file reveals that there are 220 pages present. Page 50 is missing.

The return postcard constitutes *prima facie* evidence that the entire specification, including missing page 50, was filed on May 31, 2002. MPEP 503. Accordingly, the request is granted.

The $130.00 petition fee will be credited to petitioners' deposit account, no. 06-1205.

The application is being returned to Office of Initial Patent Examination for further processing, with a filing date of May 31, 2002, using the copy of page 50 supplied with the petition.

Any inquiries pertaining to this matter may be directed to the undersigned at (703) 308-6712.

E. Shirene Willis

E. Shirene Willis
Senior Petitions Attorney
Office of Petitions
Office of the Deputy Commissioner
for Patent Examination Policy

UNITED STATES PATENT AND TRADEMARK OFFICE

Commissioner for Patents
United States Patent and Trademark Office
P.O. Box 1450
Alexandria, VA 22313-1450
www.uspto.gov

ARMSTRONG KRATZ QUINTOS
HANSON & BROOKS, LLP
1725 K STREET, N.W., SUITE 1000
WASHINGTON, D.C. 20006

COPY MAILED

MAY 3 1 2005

OFFICE OF PETITIONS

In re Application of :
Yoshinori Okajima :
Application No. 10/158,141 :
Filed: May 31, 2002 :
Attorney Docket No. 960637C

ON PETITION

This is a decision on the petition, filed May 23, 2005, under 37 CFR 1.313(c)(2) to withdraw the above-identified application from issue after payment of the issue fee.

The petition is **GRANTED**.

The above-identified application is withdrawn from issue for consideration of a submission under 37 CFR 1.114 (request for continued examination). See 37 CFR 1.313(c)(2).

Petitioner is advised that the issue fee paid on February 11, 2004 in the above-identified application cannot be refunded. If, however, the above-identified application is again allowed, petitioner may request that it be applied towards the issue fee required by the new Notice of Allowance.[1]

Telephone inquiries should be directed to Irvin Dingle at (571) 272-3210.

This matter is being referred to Technology Center AU 2816 for processing of the request for continued examination under 37 CFR 1.114 and for consideration of the concurrently filed Information Disclosure Statement.

Irvin Dingle
Petitions Examiner
Office of Petitions
Office of the Deputy Commissioner
for Patent Examination Policy

---

[1] The request to apply the issue fee to the new Notice may be satisfied by completing and returning the new Issue Fee Transmittal Form PTOL-85(b), which includes the following language thereon: Commissioner for Patents is requested to apply the Issue Fee and Publication Fee (if any) or re-apply any previously paid issue fee to the application identified above. Petitioner is advised that, whether a fee is indicated as being due or not, the Issue Fee Transmittal Form **must** be completed and timely submitted to avoid abandonment. Note the language in bold text on the first page of the Notice of Allowance and Fee(s) Due (PTOL-85).

SPE RESPONSE FOR CERTIFICATE OF CORRECTION

Paper No.:20060202

DATE : February 2, 2006

TO SPE OF : ART UNIT 2837

SUBJECT : Request for Certificate of Correction on Patent No.: 6,806,674 B2

A response is requested with respect to the accompanying request for a certificate of correction.

Please complete this form and return with file, within **7** days to:
Certificates of Correction Branch - PK 3-910
Palm location **7590** - Tel. No. 305-8201

With respect to the change(s) requested, correcting Office and/or Applicant's errors, should the patent read as shown in the certificate of correction? No new matter should be introduced, nor should the scope or meaning of the claims be changed.

Thank You For Your Assistance **Certificates of Correction Branch**

The request for issuing the above-identified correction(s) is hereby:
Note your decision on the appropriate box.

☒ **Approved** **All** changes apply.

☐ **Approved in Part** Specify below which changes **do not** apply.

☐ **Denied** State the reasons for denial below.

Comments:

P. AUSTIN BRADLEY
SUPERVISORY PATENT EXAMINER
TECHNOLOGY CENTER 2800

SPE: Paula Bradley **Art Unit** 2837

UNITED STATES PATENT AND TRADEMARK OFFICE

Commissioner for Patents
United States Patent and Trademark Office
Washington, D.C. 20231
www.uspto.gov

Paper No. 5

Sughrue Mion, PLLC
2100 Pennsylvania Avenue, N. W.
Washington, DC 20037-3213

COPY MAILED

MAY 0 5 2003

OFFICE OF PETITIONS

In re Application of	:	
Yasunobu Fujita	:	
Application No. 10/158,171	:	ON PETITION
Filed: May 31, 2002	:	
Attorney Docket No. Q70429	:	

This is in response to the "Petition Under 37 CFR 1.47(a), filed December 24, 2002.

The petition is **DISMISSED**.

Rule 47 applicant is given TWO (2) MONTHS from the mailing date of this decision to reply, correcting the below-noted deficiencies. Any reply should be entitled "Request for Reconsideration of Petition Under 37 CFR 1.47(a)," and should only address the deficiencies noted below, except that the reply may include an oath or declaration executed by the non-signing inventor. **FAILURE TO RESPOND WILL RESULT IN ABANDONMENT OF THE APPLICATION.** Any extensions of time will be governed by 37 CFR 1.136(a).

A grantable petition under 37 CFR 1.47(a) requires: (1) proof that the non-signing inventor cannot be reached or refuses to sign the oath or declaration after having been presented with the application papers (specification, claims and drawings); (2) an acceptable oath or declaration in compliance with 35 U.S.C. §§ 115 and 116; (3) the petition fee; and (4) a statement of the last known address of the non-signing inventor. Applicant lacks item (1) set forth above.

Petitioner states that nonsigning inventor, Emiko Shiraishi, has not been employed with NSK Ltd. and cannot now be located. Petitioner also states that a phone call was made to her as well as letters being sent to her home to which no response has been received. Additionally, petitioner contacted the phone company to obtain any new contact information on Ms. Shiraishi, to which there was none, and none of the co-inventors have been in contact with her.

As to item (1), the applicable statute (35 USC 116) requires that a "diligent effort" have been expended in attempting to find or reach the nonsigning inventor. See MPEP 409.03(a). The showing currently fails to demonstrate, with a documented showing, that a diligent effort was made to find or locate inventor Shiraishi, such that the declaration can be accepted under 37 CFR 1.47(a). Where inability to find or locate a named inventor(s) is alleged, a statement of facts should be submitted that fully describes the exact facts which are relied on to establish that a *diligent effort* was made to locate the inventor.

There is no indication in the petition that a copy of the application papers was mailed to inventor Shiraishi's last known address or whether such a package was returned as undeliverable. If the latter is to be the case, documentary evidence in support thereof should be submitted. In view of petitioner's statement that inventor Shiraishi could not be located, does petitioner have access to inventor Shiraishi's employee records and, if so, what does inspection of the records reveal as to a current address, forwarding address, or an address of the nearest living relative? What does inspection of the phone directories for those address locations reveal? At the very least, a search should be made of the telephone directories and an Internet search conducted. Copies of the results of the searches must be referred to in any renewed petition. See MPEP 409.03(d). If inventor Shiraishi is located, then a complete copy of the application papers (specification, claims, drawings, oath, etc.) should be mailed to Ms. Shiraishi's address, return receipt requested, along with a cover letter of instructions which includes a deadline or statement that no response will constitute a refusal. If the papers are returned and all other attempts to locate or reach the inventor, e.g., through personnel records, co-workers, E-mail, the Internet, or the telephone, etc., continue to fail, then applicant will have established that inventor Shiraishi cannot be reached or has refused to join in the application. A person having firsthand knowledge of the facts recited therein must sign the statements of the facts, where at all possible.

If inventor Shiraishi is located and the inventor orally refuses to join in the application or where there is an express or oral refusal to execute the declaration, that fact along with the time and place of the refusal must be stated in the affidavit or declaration. If, on the other hand, petitioner receives an express written refusal, a copy of the document evidencing that refusal must be made part of the affidavit or declaration.

When it is concluded by the Rule 47 applicant that an omitted inventor's conduct constitutes a refusal, all facts upon which that conclusion is based should be stated in an affidavit or declaration. If there is documentary evidence to support facts alleged in the affidavit or declaration, such evidence must be submitted.

Whenever an omitted inventor gives reason for refusing to sign the application oath or declaration, that reason should be stated in the affidavit or declaration.

In order to expedite consideration of the petition under 37 CFR 1.47(a), petitioner may wish to consider submitting the renewed petition by facsimile transmission to the telephone number indicated below and to the attention of Marianne Morgan.

Further correspondence with respect to this matter should be addressed as follows:

By mail: Assistant Commissioner for Patents
Box DAC
Washington, D.C. 20231

By FAX: (703) 308-6916
Attn: Office of Petitions

By HAND: 2201 South Clark Place
Crystal Plaza 4, Suite 3C23
Arlington, VA 22202

Telephone inquiries should be directed to Marianne Morgan at (703) 306-3475.

Frances M. Hicks
Lead Petitions Examiner
Office of Petitions
Office of the Deputy Commissioner
for Patent Examination Policy

UNITED STATES PATENT AND TRADEMARK OFFICE

Commissioner for Patents
United States Patent and Trademark Office
P. O. Box 1450
Alexandria, VA 22313-1450
www.uspto.gov

Paper No. 8

Sughrue Mion, PLLC
2100 Pennsylvania Avenue, N. W.
Washington, DC 20037-3213

COPY MAILED
AUG 2 6 2003
OFFICE OF PETITIONS

In re Application of	:	
Yasunobu Fujita, et al.	:	DECISION NOTING JOINDER OF
Application No. 10/158,171	:	INVENTOR AND PETITION
Filed: May 31, 2002	:	UNDER 37 CFR 1.47(a) MOOT
Attorney Docket No. Q70429	:	

Papers filed on August 5, 2003 in response to a "Decision Refusing Status Under 37 CFR 1.47(a)" mailed May 5, 2003 included a Declaration signed by a previously non-signing inventor, Emiko Shiraishi, in compliance with 37 CFR 1.63.

The petition is dismissed as moot.

In view of the joinder of the inventor, further consideration under § 1.47(a) is not necessary. This application does not have any Rule 1.47 status and no such status should appear on the file wrapper. This application need not be returned to this Office for any further consideration under 37 CFR 1.47(a).

The application file is being forwarded to the Office of Initial Patent Examination to complete processing of the application.

Telephone inquiries should be directed to Marianne Morgan at (703) 306-3475.

Frances Hicks

Frances M. Hicks
Lead Petitions Examiner
Office of Petitions
Office of the Deputy Commissioner
for Patent Examination Policy

UNITED STATES PATENT AND TRADEMARK OFFICE

COMMISSIONER FOR PATENTS
UNITED STATES PATENT AND TRADEMARK OFFICE
P.O. BOX 1450
ALEXANDRIA, VA 22313-1450
www.uspto.gov

CROWELL & MORING LLP
INTELLECTUAL PROPERTY GROUP
P.O. BOX 14300
WASHINGTON, DC 20044-4300

COPY MAILED

JAN 24 2005

OFFICE OF PETITIONS

In re Application of :
Klaus Solbach :
Application No. 10/158,189 : ON PETITION
Filed: May 31, 2002 :
Attorney Docket No. 420UL/51123 :

This is a decision on the petition, filed January 12, 2005, under 37 CFR 1.313(c)(2) to withdraw the above-identified application from issue after payment of the issue fee.

The petition is **GRANTED**.

The above-identified application is withdrawn from issue for consideration of a submission under 37 CFR 1.114 (request for continued examination). See 37 CFR 1.313(c)(2).

Petitioner is advised that the issue fee paid on April 22, 2004, in the above-identified application cannot be refunded. If, however, the above-identified application is again allowed, petitioner may request that it be applied towards the issue fee required by the new Notice of Allowance. [1]

Telephone inquiries relating to this decision should be directed to the undersigned at (571) 272-3204.

The application is being referred to Technology Center AU 2828 for further processing of the request for continued examination under 37 CFR 1.114 filed January 12, 2005.

Sherry D. Brinkley
Petitions Examiner
Office of Petitions
Office of the Deputy Commissioner
for Patent Examination Policy

[1]The request to apply the issue fee to the new Notice may be satisfied by completing and returning the new Issue Fee Transmittal Form PTOL-85(b), which includes the following language thereon: "Commissioner for Patents is requested to apply the Issue Fee and Publication Fee (if any) or re-apply any previously paid issue fee to the application identified above." Petitioner is advised that, whether a fee is indicated as being due or not, the Issue Fee Transmittal Form **must** be completed and timely submitted to avoid abandonment. Note the language in bold text on the first page of the Notice of Allowance and Fee(s) Due (PTOL-85).

UNITED STATES PATENT AND TRADEMARK OFFICE

Commissioner for Patents
United States Patent and Trademark Office
P.O. Box 1450
Alexandria, VA 22313-1450
www.uspto.gov

WHITHAM, CURTIS & CHRISTOFFERSON, P.C.
11491 SUNSET HILLS ROAD
SUITE 340
RESTON, VA 20190

COPY MAILED
JUN 0 9 2004
OFFICE OF PETITIONS

In re Application of :
Hiroshi Sakai, et al. :
Application No. 10/158,191 : ON PETITION
Filed: May 31, 2002 :
Attorney Docket No. 01480080AA :

This is a decision on the petition, filed June 2, 2004, under 37 CFR 1.313(c)(2) to withdraw the above-identified application from issue after payment of the issue fee.

The petition is **GRANTED**.

The above-identified application is withdrawn from issue for consideration of a submission under 37 CFR 1.114 (request for continued examination). See 37 CFR 1.313(c)(2).

Petitioner is advised that the issue fee paid on May 12, 2004, in the above-identified application cannot be refunded. If, however, the above-identified application is again allowed, petitioner may request that it be applied towards the issue fee required by the new Notice of Allowance. [1]

Telephone inquiries relating to this decision should be directed to the undersigned at (703) 305-9220.

The application is being referred to Technology Center AU 2827 for further processing of the request for continued examination under 37 CFR 1.114.

Sherry D. Brinkley
Petitions Examiner
Office of Petitions
Office of the Deputy Commissioner
for Patent Examination Policy

[1] The request to apply the issue fee to the new Notice may be satisfied by completing and returning the new Issue Fee Transmittal Form PTOL-85(b), which includes the following language thereon: "Commissioner for Patents is requested to apply the Issue Fee and Publication Fee (if any) or re-apply any previously paid issue fee to the application identified above." Petitioner is advised that, whether a fee is indicated as being due or not, the Issue Fee Transmittal Form **must** be completed and timely submitted to avoid abandonment. Note the language in bold text on the first page of the Notice of Allowance and Fee(s) Due (PTOL-85).

UNITED STATES PATENT AND TRADEMARK OFFICE

COMMISSIONER FOR PATENTS
P.O. BOX 1450
ALEXANDRIA, VA 22313-1450
www.uspto.gov

SEP 17 2003

Paper No. 11

In re Application of
Scott Fedor *et al*
Application No. 10/158,197
Filed: May 31, 2002
Attorney Docket No. 049159-0222

DECISION ON PETITION

This is a decision on the petition to make special filed on September 5, 2003. The $130.00 petition fee has been received.

Petitioners request special status on the basis of the existence of an actual infringement. A review of the petition shows that petitioners have met all of the requirements for a petition to make special based upon that grounds. See MPEP § 708.02(II).

Accordingly, the examiner will treat this application as special throughout its prosecution. Prior to the first action on the merits, the examiner will conduct a rigorous search for potentially interfering applications. The interference search will be brought up to date prior to each successive action.

The application is being forwarded to the Supervisory Patent Examiner of Patent Examining Art Unit 3724, who will forward the application to the examiner for action consistent with this Decision.

PETITION GRANTED.

Stephen Marcus, Special Program Examiner
Patent Examining Groups 3710 and 3720

Foley & Lardner
Suite 500
3000 K Street NW
Wshington, DC 20007

UNITED STATES PATENT AND TRADEMARK OFFICE

Commissioner for Patents
United States Patent and Trademark Office
P.O. Box 1450
Alexandria, VA 22313-1450
www.uspto.gov

FISH & RICHARDSON, P.C.
PO BOX 1022
MINNEAPOLIS MN 55440-1022

COPY MAILED

APR 21 2005

OFFICE OF PETITIONS

In re Application of :
Schreck et al. :
Application No. 10/158,215 :
Filed: May 31, 2002 :
Attorney Docket No. 13906-033001 :

ON PETITION

This is a decision on the petition under 37 CFR 1.182, filed January 25, 2005, to change the name of the first named inventor.

The petition is **granted**.

The name of the first inventor will be changed from Stefan Dieter Lang to Stefan Dieter Schreck. The Office records have been corrected to reflect the change of the first inventor's name as noted above.

This matter is being referred to Technology Center Art Unit 2162.

Telephone inquiries concerning this matter may be directed to the undersigned at (571) 272-3211.

Christina Tartera Donnell

Christina Tartera Donnell
Senior Petitions Attorney
Office of Petitions

Enclosure: Corrected Filing Receipt

UNITED STATES PATENT AND TRADEMARK OFFICE

COMMISSIONER FOR PATENTS
UNITED STATES PATENT AND TRADEMARK OFFICE
P.O. BOX 1450
ALEXANDRIA, VA 22313-1450
www.uspto.gov

Gregory D. Leibold
Merchant & Gould (Microsoft)
P.O. Box 2903
Minneapolis, MN 55402-0903

MAILED

JAN 04 2008

Technology Center 2100

In re Application of:
Kamen MOUTAFOV
Appl. No.: 10/158,239
Filed: May 30, 2002
For: METHOD AND SYSTEM FOR LAYERING AN INFINITE REQUEST/REPLY DATA STREAM ON FINITE, UNIDIRECTIONAL, TIME-LIMITED TRANSPORTS

DECISION ON PETITION UNDER 37 CFR § 1.59

This is a decision on the petition under 37 CFR § 1.59(b), filed on 28 December 2007, to expunge information submitted pursuant to MPEP § 724.05.

The petition is **DISMISSED**.

Petitioner requests that the information submitted on 28 December 2007 be expunged from the record if found not to be important to a reasonable examiner in deciding whether to allow the application to issue as a patent. The petition fee set forth in 37 CFR § 1.17(g) has been paid.

The petition is premature because the application has not been allowed or abandoned. Accordingly, it is not appropriate to make a final determination of whether or not the material requested to be expunged is "material," with "materiality" being defined as any information which the examiner considers as being important to a determination of patentability of the claims. Thus, the petition to expunge must be dismissed at this time.

During prosecution on the merits, the examiner will determine whether or not the information submitted on 28 December 2007 is considered to be "material." Once prosecution on the merits is closed, applicant may re-submit a petition to expunge the information. No further fee is required for such a second submission of a petition under 37 CFR § 1.59 to expunge information. If the information is not considered by the examiner to be material, the information will be expunged from the application and may be returned to applicant.

Any inquiry concerning this decision should be directed to the undersigned whose telephone number is (571) 272-3613.

Vincent N. Trans, SPRE/QAS
Technology Center 2100
Computer Architecture, Software, and
Information Security

UNITED STATES PATENT AND TRADEMARK OFFICE

UNITED STATES DEPARTMENT OF COMMERCE
United States Patent and Trademark Office
Address: COMMISSIONER FOR PATENTS
P.O. Box 1450
Alexandria, Virginia 22313-1450
www.uspto.gov

APPLICATION NO.	FILING DATE	FIRST NAMED INVENTOR	ATTORNEY DOCKET NO.	CONFIRMATION NO.
10/158,239	05/30/2002	Kamen K. Moutafov	14917.0453US01/MS300124.0	7833

27488 7590 02/12/2010
MERCHANT & GOULD (MICROSOFT)
P.O. BOX 2903
MINNEAPOLIS, MN 55402-0903

EXAMINER
TRUONG, LAN DAI T

ART UNIT	PAPER NUMBER
2452	

MAIL DATE	DELIVERY MODE
02/12/2010	PAPER

Please find below and/or attached an Office communication concerning this application or proceeding.

The time period for reply, if any, is set in the attached communication.

UNITED STATES PATENT AND TRADEMARK OFFICE

COMMISSIONER FOR PATENTS
UNITED STATES PATENT AND TRADEMARK OFFICE
P.O. BOX 1450
ALEXANDRIA, VA 22313-1450
www.uspto.gov

MAILED

FEB 12 2010

DIRECTOR OFFICE
TECHNOLOGY CENTER 2400

Gregory D. Leibold
MERCHANT & GOULD (MICROSOFT)
P.O. BOX 2903
MINNEAPOLIS MN 55402-0903

In re Application of: MOUTAFOV, K.K.
Application No. **10/158,239**
Filed: May 30, 2002
Atty Docket No. 14917.0453US01/MS300124.0
Title of Invention: METHOD AND SYSTEM FOR LAYERING AN INFINITE REQUEST/REPLY DATA STREAM ON FINITE, UNIDIRECTIONAL TIME-LIMITED TRANSPORTS

DECISION ON PETITION FOR EXPUNGING INFORMATION UNDER UNDER 37 CFR § 1.59

This is a decision on the renew petition under 37 CFR § 1.59(b), filed on January 13, 2010, to expunge information from the above identified application.

The petition is **GRANTED**.

Petitioner requests that the information listed in Exhibit A, submitted on December 28, 2007, be expunged from the record. Petitioner states that the information contains proprietary material and/or material that is subjected to a protective order which has not been made public. The petition fee set forth in 37 CFR 1.17(g) has been paid.

The information in question has been determined by the undersigned to not be material to the examination of the instant application. Applicant is required to retain the expunged material(s) for the life of any patent which issues on the above-identified application. The expunged material has been destroyed, the artifact folder closed and therefore the material will not be returned.

Any inquiry regarding this decision should be directed the undersigned whose telephone number is (571) 272-3902.

/Beatriz Prieto/

Beatriz Prieto, Quality Assurance Specialist
Technology Center 2400
Network, Multiplexing, Cable and Security

UNITED STATES PATENT AND TRADEMARK OFFICE

Commissioner for Patents
United States Patent and Trademark Office
P.O. Box 1450
Alexandria, VA 22313-1450
www.uspto.gov

WOODCOCK WASHBURN KURTZ
MACKIEWICZ & NORRIS
46TH FLOOR
ONE LIBERTY PLACE
PHILADELPHIA, PA 19103

COPY MAILED

JUN 21 2006

OFFICE OF PETITIONS

In re Application of	:	
Ron Grinfeld	:	
Application No. 10/158,240	:	DECISION ON PETITION
Filed: May 30, 2002	:	TO WITHDRAW
Attorney Docket No. COLB-0118	:	FROM RECORD
	:	

This is a decision on the Request to Withdraw as attorney or agent of record under 37 C.F.R. § 1.36(b), filed November 21, 2005.

The request is **NOT APPROVED** as moot.

A review of the file record indicates that the power of attorney to John W. Caldwell and all the attorneys/agents of record associated with customer No. 23377 have been revoked by the assignee of the patent application on April 12, 2006. Accordingly, the request to withdraw under 37 C.F.R. § 1.36(b) is moot.

All future communications from the Office will continue to be directed to the below-listed address until otherwise notified by applicant.

This application is being referred to Technology Center AU 2616.

Telephone inquires concerning this decision should be directed to Wan Laymon at 571-272-3220.

Amelia Au
Petitions Examiner
Office of Petitions

cc: MCANDREWS HELD & MALLOY
500 WEST MADISON STREET
SUITE 3400
CHICAGO, IL 60661

UNITED STATES PATENT AND TRADEMARK OFFICE

COMMISSIONER FOR PATENTS
UNITED STATES PATENT AND TRADEMARK OFFICE
P.O. BOX 1450
ALEXANDRIA, VA 22313-1450
www.uspto.gov

MAILED

JUN 15 2010

OFFICE OF PETITIONS

Michael A. Glenn
3475 EDISON WAY
SUITE L
MENLO PARK, CA 94025

In re Patent No. 6,965,667
Issue Date: November 15, 2005
Application No. 10/158,276
Filed: May 30, 2002
TO: METHOD OF ACCOUNTING
PREPAID ONLINE INTERNET SERVICE
CREDIT VALUES

ON PETITION

This is a decision on the petition under 37 CFR 1.378(c), filed May 26, 2010, to accept the unintentionally delayed payment of a maintenance fee for the above-identified patent.

The petition is GRANTED.

This patent expired on November 15, 2009 for failure to pay the 3.5 year maintenance fee. Since this petition was submitted within twenty-four months after the six-month grace period provided in 37 CFR 1.362(e), the petition was timely filed under the provisions of 37 CFR 1.378(c).

The maintenance fee is hereby accepted and the above-identified patent is reinstated as of the mail date of this decision.

There is no indication that the petition is signed by a registered patent attorney or patent agent of record. However, in accordance with 37 CFR 1.34, the signature of practitioner appearing on the correspondence shall constitute a representation to the United States Patent and Trademark Office that he is authorized to represent the particular party in whose behalf he acts. If practitioner desires to receive correspondence regarding this file, the appropriate power of attorney documents must be submitted. This decision is being mailed to practitioner, the petitioner herein. However, until otherwise instructed, all future correspondence regarding this application file will be directed solely to the above-noted correspondence address of record.

Telephone inquiries concerning this decision should be directed to the undersigned at (571) 272-3205.

The patent file is being forwarded to Files Repository.

/ALESIA M. BROWN/

Alesia M. Brown
Petitions Attorney
Office of Petitions

UNITED STATES PATENT AND TRADEMARK OFFICE

COMMISSIONER FOR PATENTS
UNITED STATES PATENT AND TRADEMARK OFFICE
P.O. BOX 1450
ALEXANDRIA, VA 22313-1450
www.uspto.gov

Samuel H. Dworetsky
AT&T Corporation
P. O. Box 4110
Middletown, NJ 07748-4110

COPY MAILED
AUG 0 2 2004
OFFICE OF PETITIONS

In re Application of	:	
Hossein Eslambolchi, et al.	:	
Application No. 10/158,281	:	ON PETITION
Filed: May 29, 2002	:	
Attorney Docket No. 2002-0072	:	

This is a decision on the petition under 37 CFR 1.137(b), filed May 14, 2004, to revive the above-identified application.

The petition is **GRANTED**.

Telephone inquiries concerning this decision should be directed to the undersigned at (703) 306-3475.

The application file is being referred to the Publishing Division to be processed into a patent.

Marianne E. Jenkins
Petitions Examiner
Office of Petitions
Office of the Deputy Commissioner
for Patent Examination Policy

UNITED STATES PATENT AND TRADEMARK OFFICE

Commissioner for Patents
United States Patent and Trademark Office
P.O. Box 1450
Alexandria, VA 22313-1450
www.uspto.gov

James C. Scott ESQ.
Roetzel & Andress
1375 E. 9th Street
One Cleveland Center 10th Floor
Cleveland OH 44114

COPY MAILED

FEB 0 1 2007

OFFICE OF PETITIONS

In re Application of	:	
Collura	:	
Application No. 10/158,299	:	ON PETITION
Filed: May 30, 2002	:	
Attorney Docket No. 73546/20572	:	

This is a decision on the petition, filed April 12, 2006, under 37 CFR 1.137(b) to revive the above-identified application.

The above-identified application became abandoned for failure to timely submit a proper reply to the October 3, 2005 final Office action. Petitioner obtained a two month extension of time and submitted an amendment after final on March 3, 2006. The March 3, 2006 amendment after final failed to place this application in *prima facie* condition for allowance, as was explained in the April 3, 2006 Advisory action. This application became abandoned on March 4, 2006. A Notice of Abandonment was mailed on April 8, 2006.

Applicant has submitted an amendment in reply to the October 3, 2005 final Office action, an acceptable statement of the unintentional nature of the delay in responding to the October 3, 2005 final Office action, and the petition fee.

The petition is **GRANTED**.

After the mailing of this decision the application will be forwarded to Technology Center A.U. 3735 for consideration of the amendment filed on April 12, 2006.

Telephone inquiries should be directed to the undersigned at (571) 272-3230.

Shirene Willis Brantley
Senior Petitions Attorney
Office of Petitions

UNITED STATES PATENT AND TRADEMARK OFFICE

Commissioner for Patents
United States Patent and Trademark Office
P.O. Box 1450
Alexandria, VA 22313-1450
www.uspto.gov

SIEMENS CORPORATION
INTELLECTUAL PROPERTY DEPT.
186 WOOD AVENUE SOUTH
ISELIN, NJ 08830

COPY MAILED

JUL 1 4 2004

OFFICE OF PETITIONS

In re Application of :
Ramesh Subramanian et al :
Application No. 10/158,305 : DECISION ON PETITION
Filed: May 30, 2002 : UNDER 37 CFR 1.78(a)(3)
Attorney Docket No. 2002P08826US :

This is a decision on the petition under 37 CFR 1.78(a)(3), filed May 27, 2004, to accept an unintentionally delayed claim under 35 U.S.C. § 120 for the benefit of priority to the prior-filed nonprovisional application set forth in the amendment filed September 8, 2003.

The petition is **GRANTED**.

A petition for acceptance of a claim for late priority under 37 CFR 1.78(a)(3) is only applicable to those applications filed on or after November 29, 2000. Further, the petition is appropriate only after the expiration of the period specified in 37 CFR 1.78(a)(2)(ii). In addition, the petition under 37 CFR 1.78(a)(3) must be accompanied by:

> **(1)** the reference required by 35 U.S.C. § 120 and 37 CFR 1.78(a)(2)(i) of the prior-filed application, unless previously submitted;[1]
> **(2)** the surcharge set forth in § 1.17(t); and
> **(3)** a statement that the entire delay between the date the claim was due under 37 CFR 1.78(a)(2)(ii) and the date the claim was filed was unintentional. The Commissioner may require additional information where there is a question whether the delay was unintentional.

---

[1] Any nonprovisional application or international application designating the United States of America claiming the benefit of one or more prior-filed copending applications or international applications designating the United States of America must contain or be amended to contain a reference (amendment to the first line of the specification following the title or in an application data sheet (ADS) to each such prior-filed application, identifying it by application number (consisting of the series code and serial number) or international application number and international filing date filing date and indicating the relationship of the applications. Cross references to other related applications may be made when appropriate (*see* § 1.14).

The instant pending application was filed on May 30, 2002, and was pending at the time of filing of the instant petition. A reference to the prior-filed nonprovisional application has been included in an amendment to the first sentence of the specification following the title, as required by 37 CFR 1.78(a)(2)(iii).

The instant nonprovisional application was filed after November 29, 2000, and the claim herein for the benefit of priority to the prior-filed nonprovisional application is submitted after expiration of the period specified in 37 CFR 1.78(a)(2)(ii). Also, the reference to the prior-filed nonprovisional application was submitted during the pendency of the instant nonprovisional application, for which the claim for benefit of priority is sought. *See* 35 U.S.C. § 120. Accordingly, having found that the instant petition for acceptance of an unintentionally delayed claim for the benefit of priority under 35 U.S.C. § 120 to the prior-filed nonprovisional application satisfies the conditions of 37 CFR 1.78(a)(3), the petition is granted.

The granting of the petition to accept the delayed benefit claim to the prior-filed application under 37 CFR 1.78(a)(3) should not be construed as meaning that the instant application is entitled to the benefit of the prior-filed application. In order for the instant application to be entitled to the benefit of the prior-filed application, all other requirements under 35 U.S.C. § 120 and 37 CFR 1.78(a)(1) and (a)(2) must be met. Similarly, the fact that the corrected Filing Receipt accompanying this decision on petition includes the prior-filed application should not be construed as meaning that applicant is entitled to the claim for benefit of priority to the prior-filed application noted thereon. Accordingly, the examiner will, in due course, consider this benefit claim and determine whether the instant application is entitled to the benefit of the earlier filing date.

A corrected Filing Receipt, which includes the priority claim to the prior-filed nonprovisional application, accompanies this decision on petition.

Any inquiries concerning this decision may be directed to the undersigned at (703) 305-8859.

The examiner of Technology Center Art Unit 1775 will consider applicant's entitlement to claim benefit of priority under 35 U.S.C. § 120 to prior-filed nonprovisional Application No. 09/393,415, filed September 10, 1999.

Karen Creasy

Karen Creasy
Petitions Examiner
Office of Petitions
Office of the Deputy Commissioner
for Patent Examination Policy

ATTACHMENT: Corrected Filing Receipt

UNITED STATES PATENT AND TRADEMARK OFFICE

Commissioner for Patents
United States Patent and Trademark Office
P.O. Box 1450
Alexandria, VA 22313-1450
www.uspto.gov

caj

Mailed: 6-6-07

In re application of	:	
Arne W. Ballantine et al.	:	DECISION ON
Serial No. 10/158,371	:	PETITION
Filed: May 30, 2002	:	

For: METHOD AND APPARATUS FOR CONTROLLING A COMBINED HEAT AND POWER FUEL CELL SYSTEM

This is a decision on the PETITION UNDER 37 CFR 1.144 TRAVERSING THE ELECTION/RESTRICTION REQUIREMENT mailed June 5, 2006.

The instant petition was filed on August 7, 2006. In the petition, it is urged that election requirement with respect to claims 21-24 should be withdrawn and claims 21-24 should be considered on the merits.

DECISION

It is noted that a notice of abandonment was mailed April 19, 2007 thereby making the instant petition moot. Accordingly the petition is **DISMISSED.**

Jacqueline M. Stone

Jacqueline M. Stone, Director
Technology Center 1700
Chemical and Materials Engineering

TROP PRUNER & HU, PC
1616 S. VOSS ROAD, SUITE 750
HOUSTON TX 77057-2631

UNITED STATES PATENT AND TRADEMARK OFFICE

Commissioner for Patents
United States Patent and Trademark Office
P.O. Box 1450
Alexandria, VA 22313-1450
www.uspto.gov

In re Patent No. BIAN ET AL.
Issue Date: January 13, 2004
Appl No.: 10/158,377
Filed: May 29, 2002
For: Correction of Inventorship

: **DECISION GRANTING**
: **PETITION**
: *37 CFR 1.324*

This is a decision on the petition filed January 20, 2010 to correct inventorship under 37 CFR 1.324.

The petition is granted.

The patented file is being forwarded to Certificate of Corrections Branch for issuance of a certificate naming only the actual inventor or inventors.

Jennifer McNeil
Supervisory Patent Examiner
Art Unit 1794
Technology Center 1700

LEWIS L. NUNNELLY
HITACHI GLOBAL STORAGE TECHNOLOGIES
INTELLECTUAL PROPERTY LAW
3403 YERBA BUENA ROAD
SAN JOSE, CA 95135

SPE RESPONSE FOR CERTIFICATE OF CORRECTION

Paper No.:20100315

DATE : March 15, 2010

TO SPE OF : ART UNIT 1794

SUBJECT : Request for Certificate of Correction on Patent No.: 6,677,052

A response is requested with respect to the accompanying request for a certificate of correction.

Please complete this form and return with file, within **7** days to:
Certificates of Correction Branch - ST (South Tower) 9A22
Palm location **7590** - Tel. No. (703) 305-8309

With respect to the change(s) requested, correcting Office and/or Applicant's errors, should the patent read as shown in the certificate of correction? No new matter should be introduced, nor should the scope or meaning of the claims be changed.

Thank You For Your Assistance **Certificates of Correction Branch**

The request for issuing the above-identified correction(s) is hereby:

Note your decision on the appropriated box.

☒ **Approved** All changes apply.

☐ **Approved in Part** Specify below which changes **do not** apply.

☐ **Denied** State the reasons for denial below.

Comments:

change in inventorship approved-

/Jennifer C McNeil/
Supervisory Patent Examiner.Art Unit 1794

UNITED STATES PATENT AND TRADEMARK OFFICE

COMMISSIONER FOR PATENTS
UNITED STATES PATENT AND TRADEMARK OFFICE
P.O. BOX 1450
ALEXANDRIA, VA 22313-1450
www.uspto.gov

DIGIMARC CORPORATION
9405 SW GEMINI DRIVE
BEAVERTON OR 97008

MAILED

MAR 13 2009

OFFICE OF PETITIONS

In re Application :
Bradley, et al. :
Application No. 10/158,385 : PATENT TERM ADJUSTMENT
Filed: May 29, 2002 :
Dkt. No.: P0620 :

This is a decision on the "APPLICATION FOR PATENT TERM ADJUSTMENT (Request for Reconsideration of PTO's Patent Term Adjustment Determination)(37 CFR 1.705(b))," filed December 30, 2008.

The application for patent term adjustment (PTA) under 37 CFR 1.705(b) is **HELD IN ABEYANCE**.

The Determination of Patent Term Adjustment under 35 U.S.C. 154(b) was mailed October 1, 2008. The instant application for PTA was timely filed December 30, 2008 at the time of payment of the issue fee. Applicants argue that application is entitled to an additional adjustment of 1,412 days in accordance with 37 CFR 1.702(b). Applicants contest the adjustment insofar as it relates to the Office's failure to issue the patent within three years of the filing date of the application pursuant to 37 CFR 1.703(b) in view of Wyeth v. Dudas, No. 07-1492 (D.D.C. September 30, 2008).

To the extent that this application for patent term adjustment requests reconsideration of the patent term adjustment as it relates to the Office's failure to issue the patent within 3 years of the filing date, a decision is being **held in abeyance** until after the actual patent date. Knowledge of the actual date the patent issues is ordinarily required to calculate the amount, if any, of additional patent term patentee is entitled to for Office failure to issue the patent within 3 years. See, 37 CFR 1.703(b). It is noted that at the time of this decision, the patent has not issued.

Applicants are given **TWO (2) MONTHS** from the issue date of the patent to file a written request for reconsideration of the patent term adjustment for Office failure to issue the patent

within 3 years. A copy of this decision should accompany the request. Applicants may seek such consideration without payment of an additional fee. However, as to all other bases for seeking reconsideration of the patent term adjustment indicated in the patent, all requirements of § 1.705(d) must be met. Requests for reconsideration on other bases must be timely filed and must include payment of the required fee.

With respect to the over 3 year calculation, rather than file the request for reconsideration of Patent Term Adjustment at the time of the mailing of the notice of allowance, applicants are advised that they may wait until the time of the issuance of the patent and file a request for reconsideration of the patent term pursuant to 37 CFR 1.705(d). The USPTO notes that it does not calculate the amount of time earned pursuant to 37 CFR 1.702(b) until the time of the issuance of the patent and accordingly, the Office will consider any request for reconsideration of the patent term adjustment due to an error in the calculation of 37 CFR 1.702(b) to be timely if the request for reconsideration is filed within two months of the issuance of the patent.

Receipt is hereby acknowledged of the required application fee of $200.00.

The application file is being forwarded to the Office of Data Management for issuance of the patent. The patent term adjustment indicated on the patent (as shown on the Issue Notification mailed about three weeks prior to patent issuance) will include any additional adjustment accrued both for Office delay in issuing the patent more than four months after payment of the issue fee and satisfaction of all outstanding requirements, and for the Office taking in excess of three years to issue the patent (to the extent that the three-year period does not overlap with periods already accorded).

Telephone inquiries specific to this matter should be directed to Petitions Attorney Alesia M. Brown at (571) 272-3205.

Kery Fries

Kery Fries
Senior Legal Advisor
Office of Patent Legal Administration
Office of Deputy Commissioner
for Patent Examination Policy

UNITED STATES PATENT AND TRADEMARK OFFICE

Commissioner for Patents
United States Patent and Trademark Office
P.O. Box 1450
Alexandria, VA 22313-1450
www.uspto.gov

MAILED

MAR 15 2010

OFFICE OF PETITIONS

DIGIMARC CORPORATION
9405 SW GEMINI DRIVE
BEAVERTON OR 97008

In re Patent No. 7,519,819	: DECISION ON APPLICATION FOR
Issued: April 14, 2009	: PATENT TERM ADJUSTMENT and
Application No. 10/158,385	: NOTICE OF INTENT TO ISSUE
Filed: May 29, 2002	: CERTIFICATE OF CORRECTION
Dkt. No.: P0620	:

This is a decision on the petition filed on March 30, 2009, which is being treated as a petition under 37 CFR 1.705(d) requesting that the patent term adjustment indicated on the above-identified patent be corrected to indicate that the term of the above-identified patent is extended or adjusted by 1,722 days.

The petition to correct the patent term adjustment indicated on the above-identified patent is **GRANTED to the extent indicated herein.**

Patentees have correctly set forth the period of adjustment to which the patent is entitled under 37 CFR 1.702(a) (408 days).

Patentees have correctly set forth the period of adjustment to which the patent is entitled under 37 CFR 1.702(b) (1,416 days).

Patentees have correctly determined the number of days by which the periods of adjustment under 37 CFR 1.702(a) and (b) overlap (zero days).

Patentees have correctly set forth the number of days the period of adjustment under 37 CFR 1.702(a)and (b) must be reduced due to applicant delay (102 days).

The net result of patentees' calculation yields an adjustment of 1,722 days (408 days under 37 CFR 1.702(a) + 1,416 days under 37 CFR 1.702(b) – zero overlapping days – 102 days of applicant delay).

However, the "B" delay may not include the number of days in the period beginning on the date on which a Notice of Appeal was filed and ending on the date of mailing of the last decision by the Board of Patent Appeals and Interferences or by a Federal court in an appeal under 35 U.S.C. 141 or a civil action under 35 U.S.C. 145, or on the date of mailing of either an action under 35

U.S.C. 132, or a notice of allowance under 35 U.S.C. 151, whichever occurs first, if the appeal did not result in a decision by the Board of Patent Appeals and Interferences. See, 37 CFR 1.703(b)(4).

Accordingly, as a Notice of Appeal was filed September 29, 2006 and a non-final Office action was mailed in response thereto on September 29, 2006, the adjustment is properly reduced an additional 117 days.

Further, as an additional Notice of Appeal was filed March 20, 2008 and a non-final Office action was mailed in response thereto on June 9, 2008, the adjustment is properly reduced an additional 82 days.

In view thereof, the patent is entitled to an overall adjustment of 1,523 days (408 days under 37 CFR 1.702(a) + 1,416 days under 37 CFR 1.702(b) – zero overlapping days – 199 days pursuant to 37 CFR 1.703(b)(4) – 102 days of applicant delay).

The Office will *sua sponte* issue a certificate of correction. Pursuant to 37 CFR 1.322, the Office will not issue a certificate of correction without first providing assignee or patentee an opportunity to be heard. Accordingly, patentees are given **one (1) month or thirty (30) days**, whichever is longer, from the mail date of this decision to respond. No extensions of time will be granted under § 1.136. See 37 CFR 1.323(a)(4).

The Office acknowledges the previous submission of the $200.00 fee set forth in 37 CFR 1.18(e). No additional fees are required.

The application is being forwarded to the Certificates of Corrections Branch for issuance of a certificate of correction. The Office will issue a certificate of correction indicating that the term of the above-identified patent is extended or adjusted by 1,523 days.

Telephone inquiries specific to this matter should be directed to the undersigned at (571) 272-3205.

/ALESIA M. BROWN/

Alesia M. Brown
Senior Petitions Attorney
Office of Petitions

Enclosure: Copy of DRAFT Certificate of Correction

UNITED STATES PATENT AND TRADEMARK OFFICE

CERTIFICATE OF CORRECTION

PATENT : 7,519,819

DATED : **April 14, 2009** **DRAFT**

INVENTOR(S) : Bradley et al.

It is certified that error appears in the above-identified patent and that said Letters Patent is hereby corrected as shown below:

On the cover page,

[*] Notice: Subject to any disclaimer, the term of this patent is extended or adjusted under 35 USC 154(b) by 1,314 days

Delete the phrase "by 1,314 days" and insert – by 1,523 days--

OIPE JC149
JUL 1 5 2002
PATENT & TRADEMARK OFFICE

L

m/P

COPY OF PAPERS
ORIGINALLY FILED

CERTIFICATE OF MAILING

I hereby certify that this correspondence is being deposited with the United States Postal Service as First Class Mail in an envelope addressed to: "Commissioner for Patents, Washington, D.C. 20231" on July 9, 2002.

Claudia S. Valera

IN THE UNITED STATES PATENT AND TRADEMARK OFFICE

APPLICANT	: Dong-Won SEO, Hyun-Cheol LEE, Kyung-Sik CHOI, Hyung Tae BANG and Byung- Tae KIM
APPLICATION NO.	: 10/158,395
DATE FILED	: May 29, 2002
FOR	: ALTERNATOR HAVING VACUUM PUMP CAPABLE OF IMPROVING COOLING CHARACTERISTIC

Commissioner for Patents
BOX: Initial Patent Examination Division
Washington, D.C. 20231

SUBMISSION OF DECLARATION AND POWER OF ATTORNEY
UNDER 37 C.F.R. §§1.53 AND 1.63

S I R:

Enclosed herewith is a Declaration and Power of Attorney, duly executed by the inventors in the above-identified application, as well as a copy of the Notice to File Missing Parts of Nonprovisional Application.

Also enclosed is a check in the amount of Eight-Hundred-and-Seventy-Dollars ($870.00) in payment of the basic application filing fee and the surcharge for late filing of a Declaration by

a large entity, as in this case.

Please credit any overpayment or charge any additional fees due in connection with this communication to Deposit Account No. 04-0838.

A copy of this Submission is enclosed herewith for deposit account charging purposes.

Respectfully submitted,

COLEMAN SUDOL SAPONE, P.C.

Dated: July 9, 2002

By: R. Neil Sudol

R. Neil Sudol
Reg. No. 31,669

714 Colorado Avenue
Bridgeport, CT 06605-1601
(203) 366-3560

 #3

UNITED STATES PATENT AND TRADEMARK OFFICE

COMMISSIONER FOR PATENTS
UNITED STATES PATENT AND TRADEMARK OFFICE
WASHINGTON, D.C. 20231
www.uspto.gov

OIPE
JUL 15 2002
PATENT & TRADEMARK OFFICE

APPLICATION NUMBER	FILING/RECEIPT DATE	FIRST NAMED APPLICANT	ATTORNEY DOCKET NUMBER
10/158,395	05/29/2002	Dong-Won Seo	Y06-146

CONFIRMATION NO. 5773

FORMALITIES LETTER

OC000000008395839

Neil Sudol
COLEMAN SUDOL SAPONE, P.C.
714 Colorado Avenue
Bridgeport, CT 06605-1601

COPY OF PAPERS ORIGINALLY FILED

Date Mailed: 07/03/2002

NOTICE TO FILE MISSING PARTS OF NONPROVISIONAL APPLICATION

FILED UNDER 37 CFR 1.53(b)

Filing Date Granted

Items Required To Avoid Abandonment:

An application number and filing date have been accorded to this application. The item(s) indicated below, however, are missing. Applicant is given **TWO MONTHS** from the date of this Notice within which to file all required items and pay any fees required below to avoid abandonment. Extensions of time may be obtained by filing a petition accompanied by the extension fee under the provisions of 37 CFR 1.136(a).

- The statutory basic filing fee is missing.
  *Applicant must submit $ **740** to complete the basic filing fee for a non-small entity. If appropriate, applicant may make a written assertion of entitlement to small entity status and pay the small entity filing fee (37 CFR 1.27).*
- The oath or declaration is missing.
  A properly signed oath or declaration in compliance with 37 CFR 1.63, identifying the application by the above Application Number and Filing Date, is required.
- To avoid abandonment, a late filing fee or oath or declaration surcharge as set forth in 37 CFR 1.16(l) of $130 for a non-small entity, must be submitted with the missing items identified in this letter.

Items Required To Avoid Processing Delays:

The item(s) indicated below are also required and should be submitted with any reply to this notice to avoid further processing delays.

SUMMARY OF FEES DUE:

Total additional fee(s) required for this application is **$870** for a Large Entity

- **$740** Statutory basic filing fee.
- **$130** Late oath or declaration Surcharge.

07/18/2002 HMARZI1 00000067 10158395
01 FC:101 740.00 OP
02 FC:105 130.00 OP

A copy of this notice MUST be returned with the reply.

W/Lorne

Customer Service Center
Initial Patent Examination Division (703) 308-1202
PART 1 - ATTORNEY/APPLICANT COPY

UNITED STATES PATENT AND TRADEMARK OFFICE

Commissioner for Patents
United States Patent and Trademark Office
Washington, D.C. 20231
www.uspto.gov

Paper No. 8

WOLF GREENFIELD & SACKS, PC
FEDERAL RESERVE PLAZA
600 ATLANTIC AVENUE
BOSTON, MA 02210-2211

COPY MAILED

FEB 21 2003

OFFICE OF PETITIONS

In re Application of
Andrew Michael Jones
Application No. 10/158,396
Filed: May 30, 2002
Attorney Docket No. S01022/80913

DECISION ON PETITION

This is a decision on the Petition for Filing Date, filed February 3, 2003, requesting the above-identified application be accorded the filing date of May 30, 2002.

Application papers in the above-identified application were filed on May 30, 2002. On July 30, 2002, the Office of Initial Patent Examination mailed a Notice to File Missing Parts of Nonprovisional Application (hereinafter "Notice"), indicating May 30, 2002, as the filing date, but requiring, inter alia, page 17 of the specification. The Notice set a two-month period for reply, with extensions of time available under 37 CFR §1.136(a).

Petitioner subsequently, on November 25, 2002, filed a response to the Notice, by filing, inter alia, page 17 of the Specification.

In response thereto, on December 17, 2002, the Office of Initial Patent Examination mailed Petitioner an Updated Filing Receipt for the above-identified application acknowledging receipt of the application; however, the filing date for the above application was changed to November 25, 2002.

Petitioner files the instant petition requesting correction of the application filing date to May 30, 2002. The petition is supported by a copy of a return-receipt postcard which acknowledges receipt of the application papers, including 17 pages of specification on May 30, 2002.

A review of the return receipt postcard reveals that Petitioner is correct. The postcard acknowledges receipt of the application papers, including 17 pages of specification by this Office on May 30, 2002. Petitioner has also re-submitted page 17 of the specification on November 25, 2002.

Evidence of receipt of any correspondence filed in the Patent and Trademark Office can be obtained by submitting a self-addressed postcard properly itemizing and identifying the paper or papers being filed. Upon receipt of the correspondence, the Patent and Trademark Office will check the listing on the post card against the papers submitted, making sure that all items listed are present and will then stamp the postcard with an Official date stamp and place the postcard in the outgoing mail. "A postcard receipt which itemizes and properly identifies the papers which are being filed serves as *prima facie* evidence of receipt in the PTO of all items listed thereon by the PTO." MPEP § 503.

No petition fee is required. A refund of the petition fee, $130.00, has been scheduled.

The application will be returned to the Office of Initial Patent Examination for further processing as a nonprovisional application with a filing date of May 30, 2002. The copy of page 17 of the specification, supplied on November 25, 2002, will be used for examination purposes.

The corrected filing date of the application is May 30, 2002. A corrected filing receipt, indicating the filing date as May 30, 2002, will be mailed to reflect the correction.

Telephone inquiries concerning this matter should be directed to Petitions Attorney Derek L. Woods at (703) 305-0014.

Christina Tartera Donnell for

Beverly M. Flanagan
Supervisory Petitions Examiner
Office of Petitions

Conferee: Christina Donnell, Esq.

UNITED STATES PATENT AND TRADEMARK OFFICE

COMMISSIONER FOR PATENTS
UNITED STATES PATENT AND TRADEMARK OFFICE
P.O. BOX 1450
ALEXANDRIA, VA 22313-1450
www.uspto.gov

Paper No. 6

Patton Boggs LLP
Attorneys at Law
2550 M Street, N. W.
Washington, DC 20037-1350

COPY MAILED

OCT 14 2003

OFFICE OF PETITIONS

In re Application of :
Thomas C. Appling, III :
Application No. 10/158,472 :
Filed: May 31, 2002 :
Attorney Docket No. 13911.100 :

DECISION GRANTING PETITION
UNDER 37 CFR 1.137(b)

This is a decision on the petition, filed September 23, 2003, which is being treated as a petition under 37 CFR 1.137(b) to revive the instant nonprovisional application for failure to timely notify the U.S. Patent and Trademark (USPTO) of the filing of an application in a foreign country, or under a multinational treaty that requires publication of applications eighteen months after filing. *See* 37 CFR 1.137(f).

The petition is **GRANTED**.

Petitioner states that the instant nonprovisional application is the subject of an application filed in an eighteen-month publication country on May 30, 2003. However, the USPTO was unintentionally not notified of this filing within 45 days subsequent to the filing of the subject application in an eighteen-month publication country.

In view of the above, this application became abandoned pursuant to 35 U.S.C. § 122(b)(2)(B)(iii) and 37 CFR 1.213(c) for failure to timely notify the Office of the filing of an application in a foreign country or under a multilateral international agreement that requires publication of applications 18 months after filing.

A petition to revive an application abandoned pursuant to 35 U.S.C. 122(b)(2)(B)(iii) for failure to notify the USPTO of a foreign filing must be accompanied by:

(1) the required reply which is met by the notification of such filing in a foreign country or under a multinational treaty;
(2) the petition fee as set forth in 37 CFR 1.17(m); and
(3) a statement that the entire delay in filing the required reply from the due date of the reply until the filing of a grantable petition was unintentional.

The instant petition has been found to be in compliance with 37 CFR 1.137(b). Accordingly, the failure to timely notify the USPTO of a foreign or international filing within 45 days after the date of filing of such foreign or international application as provided by 35 U.S.C. § 122(b)(2)(B)(iii) and 37 CFR 1.213(c) is accepted as having been unintentionally delayed.

The previous Request and Certification under 35 U.S.C. § 122(b)(2)(B)(i) has been rescinded. A Notice Regarding Rescission of Nonpublication Request which sets forth the projected publication date of January 22, 2004 accompanies this decision on petition.

Telephone inquiries concerning this decision should be directed to the undersigned at (703) 306-3475.

This application is being forwarded to Technology Center Art Unit 2622 for examination in due course.

Marianne E. Morgan

Marianne E. Morgan
Petitions Examiner
Office of Petitions
Office of the Deputy Commissioner
for Patent Examination Policy

ATTACHMENT: Notice Regarding Rescission of Nonpublication Request

UNITED STATES PATENT AND TRADEMARK OFFICE

Commissioner for Patents
United States Patent and Trademark Office
P.O. Box 1450
Alexandria, VA 22313-1450
www.uspto.gov

MAILED

MAY 19 2005

DIRECTOR'S OFFICE
TECHNOLOGY CENTER 2600

PATTON BOGGS LLP
2550 M STREET NW
WASHINGTON DC 20037-1350

In re Application of
Thomas C. Appling III

Application No. 10/158472
Filed: May 31, 2002
For: METHOD AND APPARATUS FOR EFFECTING A PRESENTATION

DECISION ON REQUEST TO WITHDRAW FROM RECORD

This is a decision on the Request for Withdrawal as attorney or agent and change of address filed on January 14, 2005.

A grantable request to withdraw as attorney/agent of record must:
(1) indicate the present mailing address of the attorney(s)/agent(s) who seek(s) to withdraw, and
(2) be signed by each attorney/agent seeking to withdraw or clearly be signed on their behalf, and
(3) be *approved* at least thirty (30) days prior to the maximum extendable period for response to any outstanding Office Action, and
(4) indicate the address to which future correspondence should be mailed.

Petitioner has met all of the above. Accordingly, the request is **GRANTED**.

All attorneys/agents associated with Customer Number 41434 are withdrawn.

All future communications from the Office will be directed to the address listed below until otherwise notified by applicant. Applicant is reminded of the obligation to promptly notify the Patent and Trademark Office of any change in correspondence address to ensure receipt of all communications from the Office.

Kenneth Wieder
Special Program Examiner
Technology Center 2600
Communications
(703) 305-4710

CC: THOMAS C. APPLING III
75-260 VIA DOMINIGO
PALM DESERT CA 92211

UNITED STATES PATENT AND TRADEMARK OFFICE

COMMISSIONER FOR PATENTS
UNITED STATES PATENT AND TRADEMARK OFFICE
P.O. BOX 1450
ALEXANDRIA, VA 22313-1450
www.uspto.gov

Paper No. 7

PATTON BOGGS
ATTORNEYS AT LAW
2550 M STREET, NW
WASHINGTON, DC 20037-1350

COPY MAILED

FEB 25 2004

OFFICE OF PETITIONS

In re Application of	:	
Thomas C. Appling III	:	
Application No. 10/158,490	:	DECISION GRANTING PETITION
Filed: May 31, 2002	:	UNDER 37 CFR 1.137(b)
Attorney Docket No. 13911.101	:	

This is a decision on the petition, filed September 23, 2003, which is being treated as a petition under 37 CFR 1.137(b) to revive the instant nonprovisional application for failure to timely notify the U.S. Patent and Trademark (USPTO) of the filing of an application in a foreign country, or under a multinational treaty that requires publication of applications eighteen months after filing. *See* 37 CFR 1.137(f).

The petition is **GRANTED**.

Petitioner states that the instant nonprovisional application is the subject of an application filed in an eighteen month publication country on May 30, 2003. However, the USPTO was unintentionally not notified of this filing within 45 days subsequent to the filing of the subject application in an eighteen month publication country.

In view of the above, this application became abandoned pursuant to 35 U.S.C. § 122(b)(2)(B)(iii) and 37 CFR 1.213(c) for failure to timely notify the Office of the filing of an application in a foreign country or under a multilateral international agreement that requires publication of applications 18 months after filing.

A petition to revive an application abandoned pursuant to 35 U.S.C. 122(b)(2)(B)(iii) for failure to notify the USPTO of a foreign filing must be accompanied by:

(1) the required reply which is met by the notification of such filing in a foreign country or under a multinational treaty;
(2) the petition fee as set forth in 37 CFR 1.17(m);

and
(3) a statement that the entire delay in filing the required reply from the due date of the reply until the filing of a grantable petition was unintentional.

The instant petition has been found to be in compliance with 37 CFR 1.137(b). Accordingly, the failure to timely notify the USPTO of a foreign or international filing within 45 days after the date of filing of such foreign or international application as provided by 35 U.S.C. § 122(b)(2)(B)(iii) and 37 CFR 1.213(c) is accepted as having been unintentionally delayed.

The previous Request and Certification under 35 U.S.C. § 122(b)(2)(B)(i) has been rescinded. A Notice Regarding Rescission of Nonpublication Request which sets forth the projected publication date of May 13, 2004 accompanies this decision on petition.

Any inquiries concerning this decision may be directed to Wan Laymon at (703) 306-5685.

This application is being forwarded to Technology Center Art Unit 2613 for examination in due course.

Frances Hicks

Frances Hicks
Lead Petitions Examiner
Office of Petitions
Office of the Deputy Commissioner
for Patent Examination Policy

ATTACHMENT: Notice Regarding Rescission of Nonpublication Request

UNITED STATES PATENT AND TRADEMARK OFFICE

COMMISSIONER FOR PATENTS
UNITED STATES PATENT AND TRADEMARK OFFICE
P.O. BOX 1450
ALEXANDRIA, VA 22313-1450
www.uspto.go

PATTON BOGGS LLP
ATTORNEYS AT LAW
2550 M STREET, N.W.
WASHINGTON, DC 20037-1350

MAIL

APR 26 2005

DIRECTOR OFFICE
TECHNOLOGY CENTER 2600

In re application of:
Thomas C. Appling, III
Application No. 10/158,490
Filed: May 21, 2002
For: METHOD AND APPARATUS FOR EFFECTING A PRESENTATION

DECISION ON REQUEST TO WITHDRAW FROM RECORD

This is a decision on the request for withdrawal as attorney/agent and change of correspondence address filed on January 14, 2005.

A grantable request to withdraw as attorney/agent of record must:
(1) indicate the present mailing address of the attorney(s)/agent(s) who seek(s) to withdraw, and
(2) be signed by each attorney/agent seeking to withdraw or clearly be signed on their behalf, and
(3) be *approved* at least thirty (30) days prior to the maximum extendable period for response to any outstanding Office Action, and
(4) indicate the address to which future correspondence should be mailed.

Petitioner has satisfied the requirements for successfully requesting withdrawal. Accordingly, the request is **GRANTED.**

All of the attorneys/agents listed in the request have been withdrawn.

All future communications from the Office will be directed to the address listed below until otherwise notified by applicant. Applicant is reminded of the obligation to promptly notify the Patent and Trademark Office of any change in correspondence address to ensure receipt of all communications from the Office.

Kenneth A. Wieder
Special Program Examiner
Technology Center 2600
Communications
(571) 272-2986

cc: Thomas C. Appling, III
75-260 Via Domingo
Palm Desert, CA 92211

SPE RESPONSE FOR CERTIFICATE OF CORRECTION

Paper No.: _____

DATE : March 12, 2008

TO SPE OF : ART UNIT 2884

SUBJECT : Request for Certificate of Correction for Appl. No 10/158494 patent no7186985

Please respond to this request for a certificate of correction within 7 days.

Please review the requested changes/corrections as shown in the **COCIN** document(s) in the IFW application image. No new matter should be introduced, nor should the scope or meaning of the claims be changed.

Please complete the response (see below) and forward the completed response to scanning using document code **COCX**.

Magdalene Talley

Certificates of Correction Branch

703-308-9390 ext. 116

Thank You For Your Assistance

The request for issuing the above-identified correction(s) is hereby:

Note your decision on the appropriate box.

- ☒ **Approved** — **All** changes apply.
- ☐ **Approved in Part** — Specify below which changes **do not** apply.
- ☐ **Denied** — State the reasons for denial below.

Comments: _____

DAVID PORTA
~~SUPERVISORY PATENT EXAMINER~~
SPE

2884
Art Unit

UNITED STATES PATENT AND TRADEMARK OFFICE

Commissioner for Patents
United States Patent and Trademark Office
P.O. Box 1450
Alexandria, VA 22313-1450
www.uspto.gov

AIR PRODUCTS AND CHEMICALS, INC.
PATENT DEPARTMENT
7201 HAMILTON BOULEVARD
ALLENTOWN, PA 18195-1501

COPY MAILED

MAR 1 0 2005

OFFICE OF PETITIONS

In re Application of	:
John Francis Kirner et al	:
Application No. 10/158,511	: DECISION GRANTING PETITION
Filed: May 30, 2002	: UNDER 37 CFR 1.313(c)(2)
Attorney Docket No. 06218 USA	:

This is a decision on the petition, filed March 8, 2005, under 37 CFR 1.313(c)(2) to withdraw the above-identified application from issue after payment of the issue fee.

The petition is **GRANTED**.

The above-identified application is withdrawn from issue for consideration of a submission under 37 CFR 1.114 (request for continued examination). See 37 CFR 1.313(c)(2).

Petitioner is advised that the issue fee paid on October 18, 2004 in the above-identified application cannot be refunded. If, however, the above-identified application is again allowed, petitioner may request that it be applied towards the issue fee required by the new Notice of Allowance.[1]

Telephone inquiries should be directed to the undersigned at (571) 272-3218.

This matter is being referred to Technology Center AU 2818 for processing of the request for continued examination under 37 CFR 1.114 and for consideration of the concurrently filed Information Disclosure Statement.

Frances Hicks

Frances Hicks
Petitions Examiner
Office of Petitions
Office of the Deputy Commissioner
for Patent Examination Policy

---

[1] *The request to apply the issue fee to the new Notice may be satisfied by completing and returning the new Issue Fee Transmittal Form PTOL-85(b), which includes the following language thereon: "Commissioner for Patents is requested to apply the Issue Fee and Publication Fee (if any) or re-apply any previously paid issue fee to the application identified above." Petitioner is advised that, whether a fee is indicated as being due or not, the Issue Fee Transmittal Form* ***must*** *be completed and timely submitted to avoid abandonment. Note the language in bold text on the first page of the Notice of Allowance and Fee(s) Due (PTOL-85).*

UNITED STATES PATENT AND TRADEMARK OFFICE

Commissioner for Patents
United States Patent and Trademark Office
P.O. Box 1450
Alexandria, VA 22313-1450
www.uspto.gov

WOODCOCK WASHBURN LLP
ONE LIBERTY PLACE, 46TH FLOOR
1650 MARKET STREET
PHILADELPHIA PA 19103

COPY MAILED

SEP 11 2006

OFFICE OF PETITIONS

In re Application of	:	
Cote, et al	:	
Application No. 10/158,543	:	DECISION ON PETITION
Filed: May 29, 2002	:	TO WITHDRAW
Attorney Docket No. FETH-0005	:	FROM RECORD
	:	

This is a decision on the Request to Withdraw as attorney or agent of record under 37 C.F.R. § 1.36(b), filed May 2, 2006.

The request is **NOT APPROVED**.

A grantable request to withdraw as attorney/agent of record must be signed by every attorney/agent seeking to withdraw or contain a clear indication that one attorney is signing on behalf of another/others. A request to withdraw will not be approved unless at least 30 (thirty) days would remain between the date of approval and the later of the expiration date of a time to file a response or the expiration date of the maximum time period which can be extended under 37 C.F.R. § 1.136(a).

The Office cannot approve the request at this time since the reasons provided do not meet any of the conditions under the mandatory or permissive categories enumerated in 37 CFR 10.40. Section 10.40 of Title 37 of the Code of Federal Regulation states, "[a] practitioner shall not withdraw from employment in a proceeding before the Office without permission from the Office[.]" More specifically, 37 CFR 10.40 states, "[i]f paragraph (b) of this section is not applicable, a practitioner may not request permission to withdraw in matter pending before the Office unless such request or such withdrawal is" for one the permissive reasons listed in 37 CFR 10.40(c). The reasons set forth in the request, "case was previously transferred", does not meet any the conditions set forth in 37 CFR 10.40.

All future communications from the Office will continue to be directed to the above-listed address until otherwise notified by applicant.

There is an outstanding Office action mailed August 9, 2006 that requires a response from the applicant.

Telephone inquiries concerning this decision should be directed to April Wise at 571-272-1642.

April M. Wise
Petitions Examiner
Office of Petitions

cc: BLACK LOWE & GRAHAM, PLLC
701 FIFTH AVENUE
SUITE 4800
SEATTLE, WA 98104

UNITED STATES PATENT AND TRADEMARK OFFICE

COMMISSIONER FOR PATENTS
UNITED STATES PATENT AND TRADEMARK OFFICE
P.O. BOX 1450
ALEXANDRIA, VA 22313-1450
www.uspto.gov

JUN 17 2004

TOWNSEND AND TOWNSEND AND CREW, LLP
TWO EMBARCADERO CENTER
EIGTH FLOOR
SAN FRANCISCO, CA 94111-3834

In re Application of	:
Charles E. Tucker	:
Serial No.: 10/158,560	: PETITION DECISION
Filed: May 21, 2002	:
Attorney Docket No.: 021153-001800US	:

This is in response to the petition under 37 CFR 1.144, filed May 19, 2004, requesting withdrawal of an improper restriction (i.e. election of species) requirement.

BACKGROUND

A review of the file history shows that this application was filed under 35 U.S.C. 111 on May 21, 2002, and contained claims 1-35. In a first Office action, mailed February 19, 2003, the examiner set forth a restriction requirement, as follows:

Group I – Claims 1-17, drawn to a catalyst system; and
Group II – Claims 18-35, drawn to a process of making a chiral alcohol.

The examiner also required an election of species within the elected Group. Applicant replied on May 29, 2003, electing Group I and identifying a species from within each component of the claim and making a *pro forma* traverse of the requirement.

The examiner mailed an *ex parte Quayle* Office action to applicants on June 27, 2003, setting a two month shortened statutory period for reply, noting the election of Group I and the species and the traversal. The examiner replied to the traversal and made the requirement Final. The examiner also determined than claims 1-11 and 15-17 read on the elected species, holding claims 11-14 withdrawn as reading on non-elected species. The examiner then determined that claims 1 –11 and 15-17 were allowable based on the elected species and objected to these claims as containing non-elected subject matter.

Applicant replied on December 29, 2003 including a four month extension of time and fee therefore. Applicants noted the indication of allowability of the elected species and requested that the examiner in accordance with M.P.E.P. 803.02 examine the related species. The

examiner mailed a Final Office action to applicants on March 22, 2004, refusing to expand the examination of the claims to additional species. The examiner relied on the species being independent and distinct as being the basis for a proper restriction. The examiner cites several references on which the claims could be rejected if not limited to the elected species, but made no formal rejection.. The examiner cited FR 2801886 as the closest prior art and how the elected species defined over it.

Applicant then filed an amendment on May 19, 2004, concurrently with this petition, canceling claims 18-35, leaving the Group I claims as originally presented.

DISCUSSION

Restriction practice under 35 U.S.C. 122 can be divided into two distinct parts. In the first an examiner may define independent and distinct inventions claimed by an applicant and require applicant to choose between them for prosecution purposes. In the second an examiner in order to determine a proper starting point for examination of related, but distinct, inventions may require an election of species. In some instances, the two procedures may be cumulative wherein a election between distinct inventions (e.g. – a compound and a method of using the compound) is made and then a election of species required within the elected group because of the plethora of species claimed. Specific guidelines are set forth for each type of requirement as well as guidelines for an examiner's action following election following either type of requirement.

In this instance the examiner has made a proper restriction requirement between compound/composition and method claims and applicant has accepted the requirement. The examiner also required an election of species within whichever group was elected. Applicant complied with this requirement and the examiner examined the elected species finding it allowable. The examiner should then have followed M.P.E.P. 803.02 and expanded the examination to related species. This may have involved searching additional subclasses or classes. Nonetheless, this is what is required. Although the examiner argues that the species are independent and distinct, classifying the group as species indicates they have a relationship to each other. M.P.E.P. 803.02 notes that species may be independent and distinct compounds, but may be related together based on activity, function or other criteria, but still requires that when the elected species is found to avoid the prior art, the examination is expanded to additional related species until one or more is found not to avoid the prior art, in which case a rejection is made. When a representative number of additional species (not necessarily all) has been examined and found to be free of the prior art then the entire genus is considered to be allowable and all claims reading thereon are allowed. Thus the examiner has not complied with the above guidelines but has sought to limit applicant's claims to the initially elected species only. This is incorrect examining procedure.

DECISION

The petition is **GRANTED.**

The application will be forwarded to the examiner for further consideration not inconsistent with this decision.

As a consequence of this decision the last Office action is withdrawn and the examiner directed to issue a new Office action in accordance with the guidelines of M.P.E.P. 803.02.

Should there be any questions about this decision please contact William R. Dixon, Jr., by letter addressed to Director, TC 1600, at the address listed above, or by telephone at 571-272-0519 or by facsimile sent to the general Office facsimile number, 703-.872-9306.

Bruce M. Kisliuk
Director, Technology Center 1600

UNITED STATES PATENT AND TRADEMARK OFFICE

UNITED STATES DEPARTMENT OF COMMERCE
United States Patent and Trademark Office
Address: COMMISSIONER FOR PATENTS
P.O. Box 1450
Alexandria, Virginia 22313-1450
www.uspto.gov

MCDERMOTT, WILL & EMERY
11682 EL CAMINO REAL
SUITE 400
SAN DIEGO, CA 92130-2047

Mail Date: 04/20/2010

Applicant	: Erkki Ruoslahti	: DECISION ON REQUEST FOR
Patent Number	: 7666391	: RECALCULATION of PATENT
Issue Date	: 02/23/2010	: TERM ADJUSTMENT IN VIEW
Appliction No	: 10/158,566	: OF WYETH AND NOTICE OF INTENT TO
Filed	: 05/29/2002	: ISSUE CERTIFICATE OF CORRECTION
		:

The Request for Recalculation is **GRANTED** to the extent indicated.

The patent term adjustment has been determined to be **1035** days. The USPTO will *sua sponte* issue a certificate of correction reflecting the amount of PTA days determined by the recalculation.

Prior to the issuance of the certificate of correction, the USPTO will afford patentee an opportunity to be heard and request reconsideration. Accordingly, patentee has **one month or thirty (30) days**, whichever is longer, to file a request for reconsideration of this patent term adjustment calculation. See 35 U.S.C. 154(b)(3)(B)(ii) and 37 CFR 1.322(a)(4). No extensions of time will be granted under 37 CFR 1.136.

Patentee should use document code PET.OP if electronically filing a request for reconsideration of this patent term adjustment calculation. The patentee must also include the information required by 37 CFR 1.705(b)(2) and the fee required by 37 CFR 1.18(e). If patentee does not file a timely request for reconsideration of this patent term adjustment calculation including the information required by 37 CFR 1.705(b)(2) and the fee required by 37 CFR 1.18(e), the USPTO will issue a certificate of correction reflecting the PTA determination noted above.

Patentee should be aware that in order to preserve the right to review in the United States District Court for the District of Columbia of the USPTO patent term adjustment determination, patentee must ensure that he or she also take the steps required under 35 U.S.C. 154(b)(4)(A) in a timely manner. Nothing in the request for recalculation should be construed as providing an alternative time frame for commencing a civil action under 35 U.S.C. 154(b)(4)(A).

Any questions concerning this decision should be directed to the Office of Patent Legal Administration at 571-272-7702.

UNITED STATES PATENT AND TRADEMARK OFFICE

COMMISSIONER FOR PATENTS
UNITED STATES PATENT AND TRADEMARK OFFICE
P.O. BOX 1450
ALEXANDRIA, VA 22313-1450
www.uspto.gov

MAIL

JAN 2 4 2005

DIRECTOR OFFICE
TECHNOLOGY CENTER 2600

MCDERMOTT WILL & EMERY LLP
600 13TH STREET, N.W.
WASHINGTON DC 20005-3096

In re Application of :
Raymond I. MILLET, et al. :
Application No. 10/158,583 :
Filed: May 31, 2002 :
For: **SOFT NETWORK INTERFACE DEVICE FOR DIGITAL BROADBAND LOCAL CARRIER NETWORKS** :

DECISION ON PETITION TO MAKE SPECIAL

This is a decision on the petition filed November 3, 2004 under Manual of Patent Examination Procedure §708.02, VIII requesting accelerated examination.

The petition under Manual of Patent Examination Procedure §708.02, VIII, must:
(1) be filed prior to receiving any examination by the examiner,
(2) be accompanied by the required fee- $130,
(3) the claims should be directed to a single invention (if it is determined that the claims pertain to more than one invention, then applicant will have to make an election without traverse or forfeit accelerated examination status),
(4) state that a pre-examination search was made, and fully discuss the search method employed, such as classes and subclasses searched, publications, Chemical abstracts, patents, etc. A search made by a foreign patent office satisfies this requirement,
(5) be accompanied by a copy of each of the references most closely related to the subject matter encompassed by the claims if said references are not already of record,
(6) fully discuss the references, pointing out with the particularity required by 37 C.F.R. §1.111 (b) and (c), how the claimed subject matter is patentable over the references.

The petitioner meets all the above-listed requirements. Accordingly, the petition is **GRANTED**.

The application will retain its special status throughout its entire prosecution, including any appeal to the Board of Patent Appeals and Interferences, subject only to diligent prosecution by the applicant. The application file is being forwarded to the examiner for appropriate action in due course.

Kenneth A. Wieder
Special Program Examiner
Technology Center 2600
Communications

UNITED STATES PATENT AND TRADEMARK OFFICE

COMMISSIONER FOR PATENTS
UNITED STATES PATENT AND TRADEMARK OFFICE
P.O. BOX 1450
ALEXANDRIA, VA 22313-1450
www.uspto.gov

MAIL

JAN 26 2005

DIRECTOR OFFICE
TECHNOLOGY CENTER 2600

MCDERMOTT WILL & EMERY LLP
600 13TH STREET, N.W.
WASHINGTON DC 20005-3096

In re Application of
Raymond I. MILLET, et al.
Application No. 10/158,586
Filed: May 31, 2002
For: **MULTI-LAYER RING ARCHITECTURE FOR FIBER-TO-THE-HOME TELCO CARRIER NETWORK**

DECISION ON PETITION TO MAKE SPECIAL

This is a decision on the petition filed November 3, 2004 under Manual of Patent Examination Procedure §708.02, VIII requesting accelerated examination.

The petition under Manual of Patent Examination Procedure §708.02, VIII, must:
(1) be filed prior to receiving any examination by the examiner,
(2) be accompanied by the required fee- $130,
(3) the claims should be directed to a single invention (if it is determined that the claims pertain to more than one invention, then applicant will have to make an election without traverse or forfeit accelerated examination status),
(4) state that a pre-examination search was made, and fully discuss the search method employed, such as classes and subclasses searched, publications, Chemical abstracts, patents, etc. A search made by a foreign patent office satisfies this requirement,
(5) be accompanied by a copy of each of the references most closely related to the subject matter encompassed by the claims if said references are not already of record,
(6) fully discuss the references, pointing out with the particularity required by 37 C.F.R. §1.111 (b) and (c), how the claimed subject matter is patentable over the references.

The petitioner meets all the above-listed requirements. Accordingly, the petition is **GRANTED**.

The application will retain its special status throughout its entire prosecution, including any appeal to the Board of Patent Appeals and Interferences, subject only to diligent prosecution by the applicant. The application file is being forwarded to the examiner for appropriate action in due course.

Kenneth A. Wieder
Special Program Examiner
Technology Center 2600
Communications

UNITED STATES PATENT AND TRADEMARK OFFICE

Commissioner for Patents
United States Patent and Trademark Office
P.O. Box 1450
Alexandria, VA 22313-1450
www.uspto.gov

STEPHEN B MAEBIUS
FOLEY AND LARDNER
3000 K STREET N W SUITE 500
WASHINGTON, DC 20007-5109

COPY MAILED

APR 19 2005

OFFICE OF PETITIONS

In re Application of Angela M. Belcher, et al. Application No. 10/158,596 Filed: May 30, 2002 Attorney Docket No. 119927-1052	: : : :	DECISION ON PETITIONS UNDER 37 CFR 1.78(a)(3) AND UNDER 37 CFR 1.78(a)(6)

This is a decision on the petitions under 37 CFR §§ 1.78(a)(3) and 1.78(a)(6), filed November 19, 2004, to accept an unintentionally delayed claim under 35 U.S.C. §§120 and 119(e) for the benefit of the prior-filed applications set forth in the concurrently filed amendment to the specification.

The petition is **GRANTED.**

A petition for acceptance of a claim for late priority under 37 CFR §§ 1.78(a)(3) and 1.78(a)(6) is only applicable to those applications filed on or after November 29, 2000. Further, the petition is appropriate only after the expiration of the period specified in 37 CFR §§ 1.78(a)(2)(ii) and 1.78(a)(5)(ii). In addition, the petition under 37 CFR §§ 1.78(a)(3) and 1.78(a)(6) must be accompanied by:

(1) the reference required by 35 U.S.C. §§ 120 and 119(e) and 37 CFR §§ 1.78(a)(2)(i) and 1.78(a)(5)(i) of the prior-filed application, unless previously submitted;

(2) the surcharge set forth in § 1.17(t); and

(3) a statement that the entire delay between the date the claim was due under 37 CFR §§ 1.78(a)(2)(ii) and 1.78(a)(5)(ii) and the date the claim was filed was unintentional. The Commissioner may require additional where there is a question whether the delay was unintentional.

The instant application was filed on November 19, 2004 and was pending at the time of filing of the instant petition. A reference to the prior-filed applications has been included in an amendment to the first sentence of the specification following the title, as required by 37 CFR §§ 1.78(a)(2)(iii) and 1.78(a)(5)(iii).

The instant nonprovisional application was filed after November 29, 2000, and the claim for priority herein is submitted after expiration of the period specified in 37 CFR §§ 1.78(a)(2)(ii) and 1.78(a)(5)(ii). *See* 35 U.S.C. §§ 120 and 119(e). Accordingly, having found that the instant petition satisfies the conditions of 37 CFR §§ 1.78(a)(3) and 1.78(a)(6) for acceptance of an unintentionally delayed claim for priority under 35 U.S.C. §§ 120 and 119(e), the petition to accept an unintentionally delayed claim of benefit to the prior-filed applications is granted.

The granting of the petition to accept the delayed benefit claim to the prior-filed applications under 37 CFR §§ 1.78(a)(3) and 1.78(a)(6) should not be construed as meaning that the instant application is entitled to the benefit of the filing date of the prior-filed applications. In order for the instant application to be entitled to the benefit of the prior-filed applications, all other requirements under 35 U.S.C. §120 and 1.78(a)(1) and (a)(2) and under 35 U.S.C. §119(e) and 37 CFR 1.78(a)(4) and (a)(5) must be met. Similarly, the fact that the corrected Filing Receipt accompanying this decision on petition includes the prior-filed applications should not be construed as meaning that applicant is entitled to the claim for benefit of priority to the prior-filed applications noted thereon. Accordingly, the examiner will, in due course, consider this benefit claim and determine whether the instant application is entitled to the benefit of the earlier filing date.

A corrected Filing Receipt, which includes the priority claim to the prior-filed provisional application, accompanies this decision on petition.

Any questions concerning this decision on petition may be directed to Retta Williams at (571) 272-3229. All other inquiries concerning either the examination procedures or status of the application should be directed to the Technology Center.

This application is being forwarded to Technology Center Art Unit 1639 for appropriate action on the amendment submitted on November 19, 2004, including consideration by the examiner of the claim under 35 U.S.C. § 120 and 37 CFR 1.78(a)(2) for the benefit of the prior-filed nonprovisional application, and for consideration of the claim under 35 U.S.C. §119(e) and 37 CFR 1.78(a)(5) for the benefit of the prior-filed provisional application.

Frances Hicks

Frances Hicks
Petitions Examiner
Office of Petitions
Office of the Deputy Commissioner
for Patent Examination Policy

Attachment: Corrected Filing Receipt

UNITED STATES PATENT AND TRADEMARK OFFICE

COMMISSIONER FOR PATENTS
UNITED STATES PATENT AND TRADEMARK OFFICE
P.O. BOX 1450
ALEXANDRIA, VA 22313-1450
www.uspto.gov

Paper No. 5

W. Daniel Swayze III
Texas Instruments Incorporated
7839 Churchill Way, MS 3999
P.O. Box 655474
Dallas TX 75265

COPY MAILED

NOV 1 3 2003

OFFICE OF PETITIONS

In re Application of
Jeffrey David Johnson
Application No.: 10/158,625
Filed May 30, 2002
Attorney Docket No: TI-32742

ON PETITION

This is in response to the petition under 37 CFR 1.137(b) filed June 30, 2003.

The petition under 37 CFR 1.137(b) is **granted**.

On July 8, 2002, a "Notice to File Corrected Application Papers " was mailed by the Office allowing a two month period for reply. Extension of time were available pursuant to 37 CFR 1.136(a). No response was noted as being received within in the allowable period and the application became abandoned on September 9, 2002. A Notice of Abandonment was mailed on October 31, 2003.

It is not apparent whether the person signing the statement of unintentional delay was in a position to have firsthand or direct knowledge of the facts and circumstances of the delay at issue. Nevertheless, such statement is being treated as having been made as the result of a reasonable inquiry into the facts and circumstances of such delay. See 37 CFR 10.18(b) and Changes to Patent Practice and Procedure; Final Rule Notice, 62 Fed. Reg. 53131, 53178 (October 10, 1997), 1203 Off. Gaz. Pat. Office 63, 103 (October 21, 1997). In the event that such an inquiry has not been made, petitioner must make such an inquiry. If such inquiry results in the discovery that it is not correct that the entire delay in filing the required reply from the due date for the reply until the filing of a grantable petition pursuant to 37 CFR 1.137(b) was unintentional, petitioner must notify the Office.

The address as cited on the petition differs from the address of record. Although a courtesy copy of this decision is being mailed to the address as cited on the petition, petitioner is advised that all future correspondence will be mailed solely to the address of record until appropriate written instructions to the contrary are received.

This application is being forwarded to the Office of Initial Patent Examination for further processing.

Telephone inquiries regarding this decision should be directed to the undersigned at (703) 305-0010.

Kenya A. McLaughlin
Petitions Attorney
Office of Petitions

cc:
R. Lee Fraley
Snell & Wilmer, LLP
One Arizona Center
400 East Van Buren
Phoenix, AZ 85004-2202

UNITED STATES PATENT AND TRADEMARK OFFICE

COMMISSIONER FOR PATENTS
UNITED STATES PATENT AND TRADEMARK OFFICE
P.O. BOX 1450
ALEXANDRIA, VA 22313-1450
www.uspto.gov

Paper No. 10

MAIL

APR 15 2004

DIRECTOR OFFICE
TECHNOLOGY CENTER 2600

KAPLAN & GILMAN, L.L.P.
900 ROUTE 9 NORTH
WOODBRIDGE NJ 07095

In re Application of
Trammell, et al.
Application No. 10/158,628
Filed: May 30, 2002
For: **METHODS AND APPARATUS FOR SUB-HARMONIC GENERATION, STEREO EXPANSION AND DISTORTION**

DECISION ON PETITION TO MAKE SPECIAL

This is a decision on the petition filed February 9, 2004 pursuant to Manual of Patent Examination Procedure §708.02, section VIII, requesting accelerated examination (paper No. 9).

The petition under Manual of Patent Examination Procedure §708.02, VIII, must:
(1) be filed prior to receiving any examination by the examiner,
(2) be accompanied by the required fee- $130,
(3) the claims should be directed to a single invention (if it is determined that the claims pertain to more than one invention, then applicant will have to make an election without traverse or forfeit accelerated examination status),
(4) state that a pre-examination search was made, and fully discuss the search method employed, such as classes and subclasses searched, publications, Chemical abstracts, patents, etc. A search made by a foreign patent office satisfies this requirement,
(5) be accompanied by a copy of each of the references most closely related to the subject matter encompassed by the claims if said references are not already of record,
(6) fully discuss the references, pointing out with the particularity required by 37 C.F.R. §1.111 (b) and (c), how the claimed subject matter is patentable over the references.

The petition lacks an acceptable statement that a pre-examination search was made with respect to the claim invention of the instant application. Petitioner states "Applicants submit that pre-examination search(es) of the prior art have been made, based on the Applicant's understanding of the art, and searches conducted by international patent offices since this application has been filed. Information Disclosure Statements setting forth the references discovered during such pre-examination searches have been filed." Regarding the requirement in item (4) above, Applicant is responsible for stating and discussing the search method employed, such as classes and subclasses searched, publications, patents, etc. A search made by a foreign patent office also satisfies the requirement. However, Applicant has not set forth the search method nor provided the search results from the aforementioned foreign patent office.

Therefore, the instant petition lacks a satisfactory statement which satisfies item (4) above.

For the above stated reasons, the petition is **DENIED**.

Should applicant desire reconsideration, he/she should supplement this petition by a declaration or statement under oath giving the information as outlined above. No further petition fee is required.

Any request for reconsideration must be filed within TWO MONTHS of the date of this decision.

The application is being forwarded to the group Central File and will await action in its regular turn.

Dwayne D. Bost
Special Program Examiner
Technology Center 2600
Communications
(703) 305-4778

UNITED STATES PATENT AND TRADEMARK OFFICE

COMMISSIONER FOR PATENTS
UNITED STATES PATENT AND TRADEMARK OFFICE
P.O. BOX 1450
ALEXANDRIA, VA 22313-1450
www.uspto.gov

Paper No. 12
MAIL

AUG 0 2 2004

DIRECTOR OFFICE
TECHNOLOGY CENTER 2600

KAPLAN & GILMAN, L.L.P.
900 ROUTE 9 NORTH
WOODBRIDGE NJ 07095

In re Application of
Trammell, et al.
Application No. 10/158,628
Filed: May 30, 2002
For: **METHODS AND APPARATUS FOR SUB-HARMONIC GENERATION, STEREO EXPANSION AND DISTORTION**

DECISION ON PETITION TO MAKE SPECIAL

This is a decision on the petition filed February 9, 2004 pursuant to Manual of Patent Examination Procedure §708.02, section VIII, requesting accelerated examination (paper No. 9) as supplemented on May 28, 2004 (paper No. 11).

The petition under Manual of Patent Examination Procedure §708.02, VIII, must:
(1) be filed prior to receiving any examination by the examiner,
(2) be accompanied by the required fee- $130,
(3) the claims should be directed to a single invention (if it is determined that the claims pertain to more than one invention, then applicant will have to make an election without traverse or forfeit accelerated examination status),
(4) state that a pre-examination search was made, and fully discuss the search method employed, such as classes and subclasses searched, publications, Chemical abstracts, patents, etc. A search made by a foreign patent office satisfies this requirement,
(5) be accompanied by a copy of each of the references most closely related to the subject matter encompassed by the claims if said references are not already of record,
(6) fully discuss the references, pointing out with the particularity required by 37 C.F.R. §1.111 (b) and (c), how the claimed subject matter is patentable over the references.

The petitioner meets all the above-listed requirements. Accordingly, the petition is **GRANTED**.

The application will retain its special status throughout its entire prosecution, including any appeal to the Board of Patent Appeals and Interferences, subject only to diligent prosecution by the applicant. The application file is being forwarded to the examiner for appropriate action in due course.

Dwayne D. Bost
Special Program Examiner
Technology Center 2600
Communications
(703) 305-4778

UNITED STATES PATENT AND TRADEMARK OFFICE

COMMISSIONER FOR PATENTS
UNITED STATES PATENT AND TRADEMARK OFFICE
P.O. BOX 1450
ALEXANDRIA, VA 22313-1450
www.uspto.gov

KAPLAN & GILMAN, L.L.P.
900 ROUTE 9 NORTH
WOODBRIDGE, NJ 07095

COPY MAILED
AUG 28 2006
OFFICE OF PETITIONS

In re Application of	:	
Coats et al.	:	
Application No. 10/158,628	:	
Filed: May 30, 2002	:	ON PETITION
Attorney Docket Number:	:	
PEAVEY 3.0-005	:	

This is a decision in response to the Petition to Change Order of Inventors Pursuant to M.P.E.P. § 605.04(f) and 37 C.F.R. § 1.182, filed on November 3, 2005. The delay intreating this petition is regretted.

Applicant files the instant petition to change the order of the names of the inventors as follows:

1. Elon Ray Coates
2. Earnest Lloyd Trammell

The petition is **granted**.

The order of inventorship change has been entered and made of record.

Petitioner is advised that the fee for filing a petition under 37 CFR 1.182 increased effective December 8, 2004 to $400.00. Petitioner's deposit account has been charged the difference between the amount submitted, $130.00, and the amount due, $400.00, or $270.00.

Telephone inquiries concerning this matter should be directed to the undersigned at (571) 272-3232.

Derek L. Woods
Attorney
Office of Petitions

SPE RESPONSE FOR CERTIFICATE OF CORRECTION

Paper No.: _____

DATE : 5-18-07

TO SPE OF : ART UNIT 3765

SUBJECT : Request for Certificate of Correction on Patent No.: 6935383 (10/158629

A response is requested with respect to the accompanying request for a certificate of correction.

Please complete this form and return with file, within 7 days to:
Palm location **7580, Certificates of Correction Branch – South Tower – 9A22**
If response is for an IFW, **return to employee (named below) via PUBSCofC Team in MADRAS.**
With respect to the change(s) requested, correcting Office and/or Applicant's errors, should the patent read as shown in the certificate of correction (COCIN)? No new matter should be introduced, nor should the scope or meaning of the claims be changed.

Eva James

Thank You For Your Assistance

Certificates of Correction Branch
Tel. No. 703-305-8309

Please reply A/S/A/P. Applicant want to know the status. Request was sent Jan 2006

The request for issuing the above-identified correction(s) is hereby:
Note your decision on the appropriate box.

- ☒ **Approved** — **All** changes apply.
- ☐ **Approved in Part** — Specify below which changes **do not** apply.
- ☐ **Denied** — State the reasons for denial below.

Comments:

SPE

3765
Art Unit

UNITED STATES PATENT AND TRADEMARK OFFICE

COMMISSIONER FOR PATENTS
UNITED STATES PATENT AND TRADEMARK OFFICE
P.O. BOX 1450
ALEXANDRIA, VA 22313-1450
www.uspto.gov

Paper No. None

MACPHERSON KWOK CHEN & HEID LLP
2033 GATEWAY PLACE
SUITE 400
SAN JOSE CA 95110

COPY MAILED
DEC 0 1 2006
OFFICE OF PETITIONS

In re Application of Robert Marc Zeidman Application No. 10/158,648 Filed: May 31, 2002 Attorney Docket Number: M-16297 US Title: APPARATUS AND METHOD FOR CONNECTING HARDWARE TO A CIRCUIT SIMULATION	DECISION ON PETITION UNDER 37 CFR 1.78(a)(3)

This is a decision on the petition under 37 CFR 1.78(a)(3), filed June 1, 2006, to accept an unintentionally delayed claim under 35 U.S.C. § 120 for the benefit of priority to the prior-filed nonprovisional application set forth in the amendment, filed concurrently with the present petition.

The petition is **GRANTED**.

A petition for acceptance of a claim for late priority under 37 CFR 1.78(a)(3) is only applicable to those applications filed on or after November 29, 2000. Further, the petition is appropriate only after the expiration of the period specified in 37 CFR 1.78(a)(2)(ii). In addition, the petition under 37 CFR 1.78(a)(3) must be accompanied by:

1) the reference required by 35 U.S.C. § 120 and 37 CFR 1.78(a)(2)(i) of the prior-filed application, unless previously submitted;
2) the surcharge set forth in § 1.17(t); and
3) a statement that the entire delay between the date the claim was due under 37 CFR 1.78(a)(2)(ii) and the date the claim was filed was unintentional. The Director may require additional information where there is a question whether the delay was unintentional.

All of the above requirements having been satisfied, the late claim for priority under 35 U.S.C. § 120 is accepted as being unintentionally delayed.

The granting of the petition to accept the delayed benefit claim to the prior-filed application under 37 CFR 1.78(a)(3) should not be construed as meaning that this application is entitled to the benefit of the prior-filed application. In order for this application to be entitled to the benefit of the prior-filed application, all other requirements under 35 U.S.C. § 120 and 37 CFR 1.78(a)(1) and (a)(2) must be met. Similarly, the fact that the corrected Filing Receipt accompanying this decision on petition includes the prior-filed application should not be construed as meaning that applicant is entitled to the claim for benefit of priority to the prior-filed application noted thereon. Accordingly, the examiner will, in due course, consider this benefit claim and determine whether the application is entitled to the benefit of the earlier filing date.

A corrected Filing Receipt, which includes the priority claim to the prior-filed nonprovisional application, accompanies this decision on petition.

Technology Center Art Unit 2128 will be made aware of this decision, so that the Examiner can consider applicant's entitlement to claim benefit of priority under 35 U.S.C. § 120 to the prior-filed application.

The Revocation of Power of Attorney with New Power of Attorney and Change of Correspondence Address has been entered and made of record.

Telephone inquiries regarding this decision should be directed to Senior Attorney Paul Shanoski at (571) 272-3225. All other inquiries concerning either the examination procedures or status of the application should be directed to the Technology Center.

Frances Hicks

Frances Hicks
Petitions Examiner
Office of Petitions
United States Patent and Trademark Office

ATTACHMENT: Corrected Filing Receipt

UNITED STATES PATENT AND TRADEMARK OFFICE

UNITED STATES DEPARTMENT OF COMMERCE
United States Patent and Trademark Office
Address: COMMISSIONER FOR PATENTS
P.O. Box 1450
Alexandria, Virginia 22313-1450
www.uspto.gov

APPL NO.	FILING OR 371 (c) DATE	ART UNIT	FIL FEE REC'D	ATTY.DOCKET NO	DRAWINGS	TOT CLMS	IND CLMS
10/158,648	05/31/2002	2128	678	M-16297 US	4	33	6

CONFIRMATION NO. 8099

CORRECTED FILING RECEIPT

OC000000021435045

32605
MACPHERSON KWOK CHEN & HEID LLP
2033 GATEWAY PLACE
SUITE 400
SAN JOSE, CA 95110

Date Mailed: 12/01/2006

Receipt is acknowledged of this regular Patent Application. It will be considered in its order and you will be notified as to the results of the examination. Be sure to provide the U.S. APPLICATION NUMBER, FILING DATE, NAME OF APPLICANT, and TITLE OF INVENTION when inquiring about this application. Fees transmitted by check or draft are subject to collection. Please verify the accuracy of the data presented on this receipt. **If an error is noted on this Filing Receipt, please mail to the Commissioner for Patents P.O. Box 1450 Alexandria Va 22313-1450. Please provide a copy of this Filing Receipt with the changes noted thereon. If you received a "Notice to File Missing Parts" for this application, please submit any corrections to this Filing Receipt with your reply to the Notice. When the USPTO processes the reply to the Notice, the USPTO will generate another Filing Receipt incorporating the requested corrections (if appropriate).**

Applicant(s)

Robert Marc Zeidman, Cupertino, CA;

Power of Attorney: The patent practitioners associated with Customer Number **32605**.

Domestic Priority data as claimed by applicant

This application is a CIP of 09/751,573 12/28/2000 PAT 7,050,962

Foreign Applications

If Required, Foreign Filing License Granted: 06/27/2002

The country code and number of your priority application, to be used for filing abroad under the Paris Convention, is US10/158,648

Projected Publication Date: Not Applicable

Non-Publication Request: No

Early Publication Request: No

**** SMALL ENTITY ****

Title

Apparatus and method for connecting hardware to a circuit simulation

Preliminary Class

703

PROTECTING YOUR INVENTION OUTSIDE THE UNITED STATES

Since the rights granted by a U.S. patent extend only throughout the territory of the United States and have no effect in a foreign country, an inventor who wishes patent protection in another country must apply for a patent in a specific country or in regional patent offices. Applicants may wish to consider the filing of an international application under the Patent Cooperation Treaty (PCT). An international (PCT) application generally has the same effect as a regular national patent application in each PCT-member country. The PCT process **simplifies** the filing of patent applications on the same invention in member countries, but **does not result** in a grant of "an international patent" and does not eliminate the need of applicants to file additional documents and fees in countries where patent protection is desired.

Almost every country has its own patent law, and a person desiring a patent in a particular country must make an application for patent in that country in accordance with its particular laws. Since the laws of many countries differ in various respects from the patent law of the United States, applicants are advised to seek guidance from specific foreign countries to ensure that patent rights are not lost prematurely.

Applicants also are advised that in the case of inventions made in the United States, the Director of the USPTO must issue a license before applicants can apply for a patent in a foreign country. The filing of a U.S. patent application serves as a request for a foreign filing license. The application's filing receipt contains further information and guidance as to the status of applicant's license for foreign filing.

Applicants may wish to consult the USPTO booklet, "General Information Concerning Patents" (specifically, the section entitled "Treaties and Foreign Patents") for more information on timeframes and deadlines for filing foreign patent applications. The guide is available either by contacting the USPTO Contact Center at 800-786-9199, or it can be viewed on the USPTO website at http://www.uspto.gov/web/offices/pac/doc/general/index.html.

For information on preventing theft of your intellectual property (patents, trademarks and copyrights), you may wish to consult the U.S. Government website, http://www.stopfakes.gov. Part of a Department of Commerce initiative, this website includes self-help "toolkits" giving innovators guidance on how to protect intellectual property in specific countries such as China, Korea and Mexico. For questions regarding patent enforcement issues, applicants may call the U.S. Government hotline at 1-866-999-HALT (1-866-999-4158).

LICENSE FOR FOREIGN FILING UNDER
Title 35, United States Code, Section 184
Title 37, Code of Federal Regulations, 5.11 & 5.15

GRANTED

The applicant has been granted a license under 35 U.S.C. 184, if the phrase "IF REQUIRED, FOREIGN FILING LICENSE GRANTED" followed by a date appears on this form. Such licenses are issued in all applications where the conditions for issuance of a license have been met, regardless of whether or not a license may be required as set forth in 37 CFR 5.15. The scope and limitations of this license are set forth in 37 CFR 5.15(a) unless an earlier license has been issued under 37 CFR 5.15(b). The license is subject to revocation upon written notification. The date indicated is the effective date of the license, unless an earlier license of similar scope has been granted under 37 CFR 5.13 or 5.14.

This license is to be retained by the licensee and may be used at any time on or after the effective date thereof

unless it is revoked. This license is automatically transferred to any related applications(s) filed under 37 CFR 1.53(d). This license is not retroactive.

The grant of a license does not in any way lessen the responsibility of a licensee for the security of the subject matter as imposed by any Government contract or the provisions of existing laws relating to espionage and the national security or the export of technical data. Licensees should apprise themselves of current regulations especially with respect to certain countries, of other agencies, particularly the Office of Defense Trade Controls, Department of State (with respect to Arms, Munitions and Implements of War (22 CFR 121-128)); the Bureau of Industry and Security, Department of Commerce (15 CFR parts 730-774); the Office of Foreign Assets Control, Department of Treasury (31 CFR Parts 500+) and the Department of Energy.

NOT GRANTED

No license under 35 U.S.C. 184 has been granted at this time, if the phrase "IF REQUIRED, FOREIGN FILING LICENSE GRANTED" DOES NOT appear on this form. Applicant may still petition for a license under 37 CFR 5.12, if a license is desired before the expiration of 6 months from the filing date of the application. If 6 months has lapsed from the filing date of this application and the licensee has not received any indication of a secrecy order under 35 U.S.C. 181, the licensee may foreign file the application pursuant to 37 CFR 5.15(b).

UNITED STATES PATENT AND TRADEMARK OFFICE

Commissioner for Patents
United States Patent and Trademark Office
P.O. Box 1450
Alexandria, VA 22313-1450
www.uspto.gov

LYNN M. BLANK
2329 CENTREVIEW TRAIL
MACEDON, NY 14502

COPY MAILED

MAY 14 2007

OFFICE OF PETITIONS

ON PETITION

In re Application of :
Jimmy Challis Gore et al :
Application No. 10/158,652 :
Filed: May 30, 2002 :
Attorney Docket No. :

This is a decision on the petition filed, December 14, 2006 under 37 CFR 1.137(b), to revive the above-identified application.

The petition is **GRANTED.**

The above-identified application became abandoned for failure to reply within the meaning of 37 CFR 1.113 in a timely manner to the final Office action mailed March 31, 2004, which set a shortened statutory period for reply of three (3) months. No extension of time under the provisions of 37 CFR 1.136(a) were obtained. Accordingly, the above-identified application became abandoned on July 1, 2004.
The above-identified application is being revived solely for purposes of continuity with a Request For Continued Examination (RCE) filed on December 14, 2006.

The file does not indicate a change of address has been submitted, although the address given on the petition differs from the address of record. If appropriate, a change of address should be filed in accordance with MPEP 601.03. A courtesy copy of this decision is being mailed to the address given on the petition; however, the Office will mail all future correspondence solely to the address of record.

Telephone inquiries concerning this decision should be directed to Irvin Dingle at (571) 272-3210.
This matters is being referred to Technology Center AU 3714 for further processing.

Irvin Dingle
Petitions Examiner
Office of Petitions

cc: Christopher E. Blank
2000 HSBC Plaza, 100 Chestnut Street
Rochester, NY 14604-2404

Johnson, Rochaun

From: Nguyen, Tuan D. (AU2643)
Sent: Tuesday, March 20, 2007 9:33 AM
To: Johnson, Rochaun
Subject: RE: Outstanding Request for C of C 6,999,595 10/158,663

Approved. Thanks, Tuan.

-----Original Message-----
From: Johnson, Rochaun
Sent: Friday, March 16, 2007 2:34 PM
To: Nguyen, Tuan D. (AU2643)
Subject: Outstanding Request for C of C 6,999,595 10/158,663

Could you please check in E-Dan / MADRAS and answer the PTO 306 IMIS dated 10/30/06. Once you make a decision please have the PTO 306 scanned in as COCOX and forward the application to me ROCHAUN JOHNSON PUBS, followed by an e-mail. I have received several status calls on this application.

Your assistant will be appreciated

Thank You,
RoChaun Johnson
703 308-9390 ext 119

UNITED STATES PATENT AND TRADEMARK OFFICE

Commissioner for Patents
United States Patent and Trademark Office
P.O. Box 1450
Alexandria, VA 22313-1450
www.uspto.gov

PAUL A. LEIPOLD
PATENT LEGAL STAFF
EASTMAN KODAK COMPANY
343 STATE STREET
ROCHESTER, NY 14650-2201

COPY MAILED

MAY 22 2006

OFFICE OF PETITIONS

In re Application of	:
Julie Baker et al	: DECISION ON PETITION
Application No. 10/158,665	: UNDER 37 CFR 1.137(b)
Filed: May 30, 2002	:
Attorney Docket No. 83110HEC	:

This is a decision on the petition under 37 CFR 1.137(b), filed August 29, 2005, to revive the above-identified application.

The petition is **granted**.

This application became abandoned for failure to timely pay the issue and publication fees on or before February 28, 2005 as required by the Notice of Allowance and Fee(s) Due, mailed November 29, 2004. A Notice of Abandonment was mailed on August 5, 2005.

The petition satisfies the requirements for a grantable petition in that the reply in the form of payment of the $1,370 issue fee and $300 publication fee; the petition fee of $1,500; and an adequate statement of unintentional delay have been submitted. Accordingly, the issue and publication fees are accepted as having been unintentionally delayed.

The rule at 37 CFR 1.137(b)(3) requires a statement that "the entire delay in filing the required reply from the due date for the reply until the filing of a grantable petition pursuant to 37 CFR 1.137(b) was unintentional." Since the statement appearing in the petition varies from the language required by 37 CFR 1.137(b)(3), the statement of unintentional delay is being construed as the statement required by 37 CFR 1.137(b)(3). Petitioner must promptly notify the Office if this is **not** a correct interpretation of the statement appearing in the petition.

Inquiries related to this communication should be directed to the undersigned at (571) 272-3218.

This matter is being referred to Publishing Division.

Frances Hicks

Frances Hicks
Petitions Examiner
Office of Petitions

UNITED STATES PATENT AND TRADEMARK OFFICE

Commissioner for Patents
United States Patent and Trademark Office
P.O. Box 1450
Alexandria, VA 22313-1450
www.uspto.gov

THE PROCTER & GAMBLE COMPANY
INTELLECTUAL PROPERTY DIVISION
WINTON HILL TECHNICAL CENTER - BOX 161
6110 CENTER HILL AVENUE
CINCINNATI, OH 45224

COPY MAILED

FEB 2 6 2004

OFFICE OF PETITIONS

In re Application of
Charles P. Miller, et al.
Application No. 10/158,669
Filed: May 30, 2002
Attorney Docket No. AA284MRD

ON PETITION

This is a decision on the petition under 37 CFR 1.313(c)(2), filed February 18, 2004, to withdraw the above-identified application from issue after payment of the issue fee.

The petition is **GRANTED**.

The above-identified application is withdrawn from issue for consideration of a submission under 37 CFR 1.114 (request for continued examination). See 37 CFR 1.313(c)(2).

Petitioner is advised that the issue fee paid on January 26, 2004, in the above-identified application cannot be refunded. If, however, the above-identified application is again allowed, petitioner may request that it be applied towards the issue fee required by the new Notice of Allowance.[1]

Telephone inquiries relating to this decision should be directed to the undersigned at (703) 305-9220.

The application is being forwarded to Technology Center AU 1734 for further processing of the request for continued examination under 37 CFR 1.114.

Sherry D. Brinkley
Petitions Examiner
Office of Petitions
Office of the Deputy Commissioner
for Patent Examination Policy

[1]The request to apply the issue fee to the new Notice may be satisfied by completing and returning the new Issue Fee Transmittal Form PTOL-85(b), which includes the following language thereon: "Commissioner for Patents is requested to apply the Issue Fee and Publication Fee (if any) or re-apply any previously paid issue fee to the application identified above." Petitioner is advised that, whether a fee is indicated as being due or not, the Issue Fee Transmittal Form **must** be completed and timely submitted to avoid abandonment. Note the language in bold text on the first page of the Notice of Allowance and Fee(s) Due (PTOL-85).

Certification of Facsimile Transmission

I hereby certify that this correspondence is being facsimile transmitted to the Commissioner for Patents in the US Patent and Trademark Office on 2/18/04

Jack L. Oney, Jr. 42,964
Name of Attorney/Agent (Registration No.)

Signature of Attorney or Agent

RECEIVED
CENTRAL FAX CENTER
FEB 1 8 2004

SPECIAL PROCEDURES SUBMISSION

P&G Case AA284MRD

IN THE UNITED STATES PATENT AND TRADEMARK OFFICE

OFFICIAL

In the application of	:	
Douglass S. Henry et al.	:	Confirmation No. 2413
Serial No. 10/158,669	:	Group Art Unit 1734
Filed May 30, 2002	:	Examiner Sue A. Purvis

For Registration System For Phasing Simultaneously Advancing Webs Of Material Having Variable Pitch Lengths

PETITION TO WITHDRAW APPLICATION FROM ISSUE PURSUANT TO 37 C.F.R. 1.313

Mail Stop 313(c)
Commissioner for Patents
P.O. Box 1450
Alexandria, VA 22313-1450

Dear Sir:

Pursuant to 37 C.F.R. 1.313(c), Applicant(s) hereby petition the Commissioner to withdraw the above-identified application from issue. Withdrawal is requested so that the application can be abandoned to permit consideration of an Information Disclosure Statement submitted with:

[X] the Request for Continued Examination under 37 C.F.R. 1.114.

OR

[] the Continuation Application under 37 C.F.R. 1.53(b) being filed concurrently with this Petition.

Please charge the petition fee of $130.00, pursuant to 37 C.F.R. 1.17(h), to Deposit Account No. 16-2480.

Applicant(s) also requests that the amount of the issue fee paid on the above-identified application be credited to the above account.

Respectfully submitted,

By _____
Jack L. Oney, Jr.
Attorney for Applicant(s)
Registration No. 42,964
(513) 626-3047

Date: February 18, 2004
Customer No. 27752

02/26/2004 AKELLEY 00000008 162480 10158669
01 FC:1460 130.00 DA

Please type a plus sign (+) inside this box → [+]

PTO/SB/30 (08-03)
U.S. Patent and Trademark Office: U.S. DEPARTMENT OF COMMERCE

Under the Paperwork Reduction Act of 1995, no persons are required to respond to a collection of information unless it displays a valid OMB control number

REQUEST FOR CONTINUED EXAMINATION (RCE) TRANSMITTAL

Address to:
Mail Stop RCE
Commissioner for Patents
P.O. Box 1450
Alexandria, VA 22313-1450

Application Number	10/158,669
Filing Date	May 30, 2002
First Named Inventor	Douglass S. Henry
Group Art Unit	1734
Examiner Name	Sue A. Purvis
Attorney Docket Number	AA284MRD
Confirmation Number	2413

This is a Request for Continued Examination (RCE) under 37 C.F.R. § 1.114 of the above-identified application.

Request for Continued Examination (RCE) practice under 37 CFR 1.114 does not apply to any utility or plant application filed prior to June 8, 1995, or to any design application. See Instruction Sheet for RCEs (not to be submitted to the USPTO) on page 2.

1. **Submission required under 37 C.F.R. § 1.114** Note: If the RCE is proper, any previously filed unentered amendments and amendments enclosed with the RCE will be entered in the order in which they were filed unless applicant instructs otherwise. If applicant does not wish to have any previously filed unentered amendment(s) entered, applicant must request non-entry of such amendment(s).
   a. [ ] Previously submitted. If a final Office action is outstanding, any amendments filed after the final Office action may be considered as a submission even if this box is not checked.
   i. [ ] Consider the arguments in the Appeal Brief or Reply Brief previously filed on _____
   ii. [X] Other: Information Disclosure Statement (IDS) – PREVIOUSLY FILED ON 11/21/2003, BUT NOT YET CONSIDERED

   b. Enclosed
   i. [ ] Amendment/Reply
   ii. [ ] Affidavit(s)/Declaration(s)
   iii. [ ] Information Disclosure Statement (IDS)
   iv. [ ] Other ____

2. **Miscellaneous**
   a. [] Suspension of action on the above-identified application is requested under 37 C.F.R. §1.103(c) for a period of __ months. (Period of suspension shall not exceed 3 months; Fee under 37 C.F.R. § 1.17(i) required)
   b. [] Other ___

3. **Fees** The RCE fee under 37 C.F.R. §1.17(e) is required by 37 C.F.R. §1.114 when the RCE is filed.
   [X] The Director is hereby authorized to charge the following fees, or credit any overpayments, to Deposit Account No. 16-2480.
   i. [X] RCE fee required under 37 C.F.R. §1.17(e)
   ii. [] Extension of time fee (37 C.F.R. §§1.136 and 1.17)
   iii. [] Suspension of action fee under 37 C.F.R. 1.17(i)
   iv. [] Other ____

SIGNATURE OF APPLICANT, ATTORNEY, OR AGENT REQUIRED

NAME (Print/Type)	Jack L. Oney, Jr.	Reg. No. (Attorney/Agent) 42,964
SIGNATURE		DATE 2/18/04

CERTIFICATE OF MAILING OR TRANSMISSION

I hereby certify that this correspondence is being deposited with the United States Postal Service with sufficient postage as first class mail in an envelope addressed to: Mail Stop RCE, Commissioner for Patents, P.O. Box 1450, Alexandria, VA 22313-1450, or facsimile transmitted to the U.S. Patent and Trademark Office on the date shown below:

NAME (Print/Type)	Jack L. Oney, Jr.	
SIGNATURE		DATE 2/18/04

This collection of information is required by 37 CFR 1.114. The information is required to obtain or retain a benefit by the public which is to file (and by the USPTO to process) an application. Confidentiality is governed by 35 U.S.C. 122 and 37 CFR 1.14. This collection is estimated to take 12 minutes to complete, including gathering, preparing and submitting the completed application form to the USPTO. Time will vary depending upon the needs of the individual case. Any comments on the amount of time you require to complete this form and/or suggestions for reducing this burden, should be sent to the Chief Information Officer, U.S. Patent and Trademark Office P.O. Box 1450, Alexandria, VA 22313-1450. DO NOT SEND FEES OR COMPLETED FORMS TO THIS ADDRESS. Send Fees and Completed forms to the following address: Mail Stop RCE, Commissioner for Patents, P.O. Box 1450, Alexandria, VA 22313-1450.

02/26/2004 AKELLEY 00000008 162480 10158669

02 FC:1801 770.00 DA

UNITED STATES PATENT AND TRADEMARK OFFICE

COMMISSIONER FOR PATENTS
UNITED STATES PATENT AND TRADEMARK OFFICE
P.O. BOX 1450
ALEXANDRIA, VA 22313-1450
www.uspto.gov

Paper No. 7

Eric A. Stephenson
Campbell Stephenson Ascolese, LLP
4807 Spicewood Springs Road
Building 4, Suite 201
Austin, TX 78759

COPY MAILED
APR 26 2004
OFFICE OF PETITIONS

In re Application of
Attila Kovacs-Birkas, et. al.
Application No. 10/158,670
Filed: May 30, 2002
Attorney Docket No. NEC0237US

ON PETITION

This is a decision on the petition under 37 CFR 1.137(b), filed April 16, 2004, to revive the above-identified application.

The above-identified application became abandoned for failure to reply in a timely manner to the Notice to File Missing Parts of Application (Notice) mailed July 1, 2002. The Notice set a period for reply of two (2) months from the mail date of the Notice. No extensions of time under the provisions of 37 CFR 1.136(a) were obtained. Accordingly, the above-identified application became abandoned after midnight September 1, 2002.

In response to the Notice to File Missing Parts, petitioner submitted with the instant petition 1,330 for the petition to revive fee, an executed oath/declaration, and $130 for the late filing of the oath/declaration.

Since the requirements for a grantable petition have been met, the petition is **GRANTED**.

The application file is being forwarded to the Office of Initial Patent Examination Unit for further processing.

Telephone inquiries concerning this decision should be directed to Andrea Smith at (703) 308-6711.

Andrea Smith
Petitions Examiner
Office of Petitions
Office of the Deputy Commissioner
for Patent Examination Policy

UNITED STATES PATENT AND TRADEMARK OFFICE

COMMISSIONER FOR PATENTS
UNITED STATES PATENT AND TRADEMARK OFFICE
P.O. BOX 1450
ALEXANDRIA, VA 22313-1450
www.uspto.gov

Paper No. 10

PENNY L. PRATER
CHEVRONTEXACO CORPORATION
P.O. BOX 6006
SAN RAMON, CA 94583-0806

COPY MAILED

MAR 1 1 2004

OFFICE OF PETITIONS

In re Application of :
Robert W. Bachtel, et al. :
Application No. 10/158,682 :
Filed: May 29, 2002 :
Attorney Docket No. T-5488 :

ON PETITION

This is a decision on the petition under 37 CFR 1.137(b), filed March 1, 2004, to revive the above-identified application.

The petition is **GRANTED.**

The above-identified application became abandoned for failure to reply in a timely manner to the non-final Office action mailed June 25, 2003, which set a shortened statutory period for reply of three (3) months. No extensions of time under the provisions of 37 CFR 1.136(a) were obtained. Accordingly, the application became abandoned on September 26, 2003.

37 CFR 1.137(b)(3) requires a statement that the entire delay in filing the required reply from the due date for the reply until the filing of a grantable petition pursuant to 37 CFR 1.137(b) was unintentional. If the statement contained in the instant petition varies from the language required by 37 CFR 1.137(b)(3), it will be interpreted as the required statement. Petitioner must notify the Office if this is **not** a correct interpretation of the statement contained in the instant petition.

The application file is being forwarded to Technology Center 1700, Art Unit 1764 for further processing.

Telephone inquiries concerning this decision should be directed to the undersigned at (703) 306-5594.

Retta Williams

Retta Williams
Petitions Examiner
Office of Petitions
Office of the Deputy Commissioner
for Patent Examination Policy

UNITED STATES PATENT AND TRADEMARK OFFICE

Commissioner for Patents
United States Patent and Trademark Office
P.O. Box 1450
Alexandria, VA 22313-1450
www.uspto.gov

DAVIDSON, DAVIDSON & KAPPEL
14TH FLOOR
485 SEVENTH AVENUE
NEW YORK NY 10018

COPY MAILED
AUG 0 9 2006
OFFICE OF PETITIONS

In re Patent No. 6,905,592	:	
Issue Date: June 14, 2005	:	
Application No. 10/158,703	:	ON PETITION
Filed: May 30, 2002	:	
Attorney Docket No. 346.1003	:	

This is a decision on the petition filed October 25, 2004, and resubmitted on December 12, 2005, which is being treated under 37 CFR 3.81(b)[1] to correct the assignee on the front page of the above-identified patent by way of a Certificate of Correction.

The petition is granted.

Telephone inquiries concerning this matter may be directed to the undersigned at (571) 272-3208. Any questions concerning the issuance of the Certificate of Correction should be directed to the Certificates of Correction Branch at (703) 305-8309.

This matter is being referred to the Certificates of Correction Branch for issuance of the requested Certificate of Correction.

Karen Creasy

Karen Creasy
Petitions Examiner
Office of Petitions

[1]See Official Gazette of June 22, 2004

UNITED STATES PATENT AND TRADEMARK OFFICE

COMMISSIONER FOR PATENTS
UNITED STATES PATENT AND TRADEMARK OFFICE
P.O. BOX 1450
ALEXANDRIA, VA 22313-1450
www.uspto.gov

Paper No. 8

MONTY L. ROSS
LOCKE LIDDELL & SAPP
SUITE 2200
2200 ROSS AVENUE
DALLAS, TX 75201-2748

COPY MAILED
FEB 1 0 2004
OFFICE OF PETITIONS

In re Application of	:	
Don H. Clarke	:	
Application No. 10/158,708	:	ON PETITION
Filed: May 30, 2002	:	
Attorney Docket No. 18635 83005	:	

This is a decision on the petition under 37 CFR 1.137(b), filed February 2, 2004, to revive the above-identified application.

The petition is **GRANTED**.

The above-identified application became abandoned for failure to reply in a timely manner to the Notice to File Missing Parts of Nonprovisional Application (Notice) mailed June 28, 2002. The Notice set a period for reply of two (2) months from the mail date of the Notice. No extensions of time under the provisions of 37 CFR 1.136(a) were obtained. Accordingly, the above-identified application became abandoned on August 29, 2002.

Telephone inquiries concerning this decision should be directed to Wan Laymon at (703) 305-9282.

The application file is being forwarded to the Office of Initial Patent Examination.

Wan Laymon
Wan Laymon
Petitions Examiner
Office of Petitions
Office of the Deputy Commissioner
for Patent Examination Policy

UNITED STATES PATENT AND TRADEMARK OFFICE

UNITED STATES DEPARTMENT OF COMMERCE
United States Patent and Trademark Office
Address: COMMISSIONER FOR PATENTS
P.O. Box 1450
Alexandria, Virginia 22313-1450
www.uspto.gov

APPLICATION NO.	FILING DATE	FIRST NAMED INVENTOR	ATTORNEY DOCKET NO.	CONFIRMATION NO.
10/158,719	05/30/2002	Michael A. Wade	10121-0001	8467

3490 7590 01/27/2008
DOUGLAS T. JOHNSON
MILLER & MARTIN
1000 VOLUNTEER BUILDING
832 GEORGIA AVENUE
CHATTANOOGA, TN 37402-2289

EXAMINER
SHIN, KYUNG H

ART UNIT	PAPER NUMBER
2143	

MAIL DATE	DELIVERY MODE
01/27/2008	PAPER

Please find below and/or attached an Office communication concerning this application or proceeding.

The time period for reply, if any, is set in the attached communication.

UNITED STATES PATENT AND TRADEMARK OFFICE

Commissioner for Patents
United States Patent and Trademark Office
P.O. Box 1450
Alexandria, VA 22313-1450
www.uspto.gov

DOUGLAS T. JOHNSON
MILLER & MARTIN
1000 VOLUNTEER BUILDING
832 GEORGIA AVENUE
CHATTANOOGA TN 37402-2289

MAILED

JAN 27 2008

Technology Center 2100

In re Application of: Michael A. WADE
Application No. 10/158,719
Filed: May 30, 2002
For: **OPTIMIZATION OF NETWORK PERFORMANCE THROUGH UNI-DIRECTIONAL ENCAPSULATION**

DECISION ON PETITION UNDER 37 C.F.R. § 1.181

This is a decision on the petition, filed Sept 26, 2006, under 37 CFR § 1.181 to reconsider and reverse the examiner's premature Final rejection mailed Mar 24, 2006.

The petition is **DISMISSED**.

On Sept 26, 2006, applicant's counsel filed a petition to the Director under 37 CFR § 1.181 to seek relief from actions of the examiner Kyung Shin and SPE David Wiley in relation to the Final office action mailed Mar 24, 2006.

In the petition, applicant's counsel alleged that the examiner "placed a strained interpretation" of the word encapsulation in the Final office action and refused to enter his Amendment after Final with new claims filed on May 24, 2006; thus, rendered the Final office action premature.

MPEP § 1201 states, in part:

> The line of demarcation between appealable matters for the Board of Patent Appeals and Interferences (Board) and petitionable matters for the Director of the U.S. Patent and Trademark Office (Director) should be carefully observed. The Board will not ordinarily hear a question that should be decided by the Director on petition, and the Director will not ordinarily entertain a petition where the question presented is a matter appealable to the Board...

A review of the prosecution history in the instant application and the petition indicates that there is a disagreement between the examiner and applicant's counsel on how to interpret the term "encapsulation" in independent claims 1 and 15. All claims have been rejected under 35 U.S.C. 103(a). Thus, it is apparent that such a disagreement regarding claim interpretation and rejection is appealable, not a petitionable matter.

Furthermore, MPEP 714.13 states that applicant cannot, as a matter of right, amend any finally rejected claims, add new claims after a final rejection; therefore the examiner's refusal of the Amendment after Final is proper.

Pursuant to MPEP § 1201, the petition is **DISMISSED.**

Upon the mailing of this decision, the application will be forward to the examiner for treatment of the Remand from the Board of Appeal on Oct 14, 2007 and consideration of the Reply Appeal Brief filed Sept 10, 2007.

Any inquiry concerning this decision should be directed to Kim Huynh whose telephone number is (571) 242-4147.

Jeffrey Gaffin, Acting Director
Technology Center 2100
Computer Architecture, Software, and
Information Security

UNITED STATES PATENT AND TRADEMARK OFFICE

Commissioner for Patents
United States Patent and Trademark Office
P.O. Box 1450
Alexandria, VA 22313-1450
www.uspto.gov

Hanify & King, P.C.
1875 K Street
Suite 707
WASHINGTON DC 20006

COPY MAILED

DEC 0 5 2008

OFFICE OF PETITIONS

ON PETITION

In re Application of :
Wade :
Application No. 10/158,719 :
Filed: May 30, 2002 :
Attorney Docket No. 5324-001-US01 :
For: OPTIMIZATION OF NETWORK PERFORMANCE THROUGH UNI-DIRECTIONAL ENCAPSULATION

This is a decision on the petition under 37 CFR 1.181, filed October 17, 2008, to withdraw the holding of abandonment of the above-identified application.

The petition under 37 CFR 1.181 is **GRANTED**.

The Office contended that the above-identified application became abandoned for failure to timely submit a reply within one month or thirty days (whichever was longer) of the mailing of the November 29, 2007 Notice of Non-Compliant Appeal Brief (Notice). The filing of the present petition precedes the mailing of a Notice of Abandonment or a notice regarding dismissal of appeal.

Petitioner alleges that the November 29, 2007 Notice was not received at the then-correspondence address of record.

The showing required to establish non-receipt of an Office communication must include:

1. A statement from the practitioner stating that the Office communication was not received by the practitioner and attesting to the fact that a search of the file jacket and docket records indicates that the Office communication was not received.
2. A copy of the docket record where the non-received Office communication would have been entered had it been received and docketed must be attached to and referenced in practitioner's statement.[1]

[1] See notice entitled "Withdrawing the Holding of Abandonment When Office Actions Are Not Received," 1156 O.G. 53 (November 16, 1993).

Petitioner has submitted a copy of the docket records where the requirement would have been entered had the November 29, 2007 Notice been received. In addition, a former attorney of record referenced the records in his declaration and a current attorney of record stated that a review of the file jacket and docket records for the November 29, 2007 Notice was fruitless.

Petitioner has established non-receipt of the Notice. The petition is **granted**. No petition fee has been or will be charged in connection with this matter.

The applicant has filed an RCE under 37 CFR 1.114 after the filing of a Notice of Appeal to the Board of Patent Appeals and Interferences (Board), but prior to a decision on the appeal. Therefore, it will be treated as a request to withdraw the appeal and to reopen prosecution of the application before the examiner. After the mailing of this decision, the application will be returned to the Technology Center AU 2443 for consideration of the RCE and amendment filed with the present petition on October 17, 2008.

Telephone inquiries may be directed to the undersigned at (571) 272-3230.

Shirene Willis Brantley

Shirene Willis Brantley
Senior Petitions Attorney
Office of Petitions

UNITED STATES PATENT AND TRADEMARK OFFICE

Commissioner for Patents
United States Patent and Trademark Office
P.O. Box 1450
Alexandria, VA 22313-1450
www.uspto.gov

COPY MAILED

JUN 3 0 2004

OFFICE OF PETITIONS

FRED PRUNER-TROP, PRUNER, HU P.C.
8554 KATY FREEWAY, SUITE 100
HOUSTON TX 77024

In re Application of
Daniel O. Jones et al
Application No. 10/158,754
Filed: May 30, 2002
Attorney Docket No. Plug-741

: DECISION ON PETITION
: UNDER 37 CFR 1.78(a)(3)

This is a decision on the petition under 37 CFR 1.78(a)(3), filed June 3, 2004, to accept an unintentionally delayed claim under 35 U.S.C. §120 for the benefit of prior-filed nonprovisional Application No. 09/749,297, set forth in the amendment filed concurrently with the instant petition.

The petition is **DISMISSED**.

A petition for acceptance of a claim for late priority under 37 CFR 1.78(a)(3) is only applicable to those applications filed on or after November 29, 2000. Further, the petition is appropriate only after the expiration of the period specified in 37 CFR 1.78(a)(2)(ii). In addition, the petition under 37 CFR 1.78(a)(3) must be accompanied by:

> **(1)** the reference required by 35 U.S.C. § 120 and 37 CFR 1.78(a)(2)(i) of the prior-filed application, unless previously submitted;[1]
> **(2)** the surcharge set forth in § 1.17(t); and
> **(3)** a statement that the entire delay between the date the claim was due under 37 CFR 1.78(a)(2)(ii) and the date the claim was filed was unintentional. The Commissioner may require additional information where there is a question whether the delay was unintentional.

The instant application was filed on May 30, 2002, and was pending at the time of filing of the instant petition.

---

[1] Any nonprovisional application or international application designating the United States of America claiming the benefit of one or more prior-filed copending applications or international applications designating the United States of America must contain or be amended to contain a reference (amendment to the first line of the specification following the title or in an application data sheet (ADS)) to each such prior-filed application, identifying it by application number (consisting of the series code and serial number) or international application number and international filing date filing date and indicating the relationship of the applications. Cross references to other related applications may be made when appropriate (*see* § 1.14).

The reference to the prior-filed application was not included in the manner specified in 37 CFR 1.78(a)(2)(i) (i.e., in an ADS or in an amendment to the first sentence following the title of the specification) or filed within the period specified in 37 CFR 1.78(a)(2)(ii).

The instant petition does not comply with item (1)

37 CFR 1.78(a)(2)(i) requires that any nonprovisional application claiming the benefit of one or more prior-filed copending nonprovisional applications must contain or be amended to contain a reference to each such prior-filed application, identifying it by application number (consisting of the series code and serial number) and indicating the relationship of the applications. The relationship between the applications is whether the subject application is a continuation, divisional, or continuation-in-part of a prior-filed nonprovisional application. An example of a proper benefit claim is: "This application is a continuation of Application No. 10/---, filed---." A benefit claim that merely states: "This application claims the benefit of Application No. 10/---, filed---," does not comply with 37 CFR 1.72(a)(2)(i) since the proper relationship, which includes the type of continuing application, is not stated. Also, the status of each nonprovisional parent application (if it is patented or abandoned) should also be indicated, following the filing date of the parent nonprovisional application. See Manual of Patent Examining Procedure, 8th ed., August 2001), Section 201.11, Reference to First Application. The amendment filed June 3, 2004, do not state the relationship of prior-filed Application No. 09/749,297 to the instant application.

Additionally, the amendment filed with the instant petition did not include the reference to the provisional application. Also, on page one of the petition, Application No. 09/740,297 was referenced instead of Application No. 09/749,297.

Accordingly, before the petition under 37 CFR 1.78(a)(3) can be granted, a renewed petition under 37 CFR 1.78(a)(3) and correction of the above is required.

Further correspondence with respect to this matter should be addressed as follows:

By mail: Mail Stop PETITIONS
Commissioner for Patents
Post Office Box 1450
Alexandria, VA 22313-1450

By hand: Customer Window located at:

2011 South Clark Place
Crystal Plaza Two Lobby
Room 1B03
Arlington, VA 22202

By fax: (703) 872-9306
ATTN: Office of Petitions

Any questions concerning this matter may be directed to Karen Creasy at (703) 305-8859 .

Karen Creasy

Karen Creasy
Petitions Examiner
Office of Petitions
Office of the Deputy Commissioner
for Patent Examination Policy

UNITED STATES PATENT AND TRADEMARK OFFICE

Commissioner for Patents
United States Patent and Trademark Office
P.O. Box 1450
Alexandria, VA 22313-1450
www.uspto.gov

FRED PRUNER - TROP, PRUNER, HU P.C.
8554 KATY FREEWAY, SUITE 100
HOUSTON TX 77024

COPY MAILED

OCT 26 2004

OFFICE OF PETITIONS

In re Application of
Daniel O. Jones et al
Application No. 10/158,754
Filed: May 30, 2002
Attorney Docket No. Plug-741

: DECISION ON PETITION
: UNDER 37 CFR 1.78(a)(3)

This is a decision on the renewed petition under 37 CFR 1.78(a)(3), filed July 26, 2004, to accept an unintentionally delayed claim under 35 U.S.C. § 120 for the benefit of priority to the prior-filed nonprovisional application set forth in the amendment filed with the instant petition.

The petition is **GRANTED**.

A petition for acceptance of a claim for late priority under 37 CFR 1.78(a)(3) is only applicable to those applications filed on or after November 29, 2000. Further, the petition is appropriate only after the expiration of the period specified in 37 CFR 1.78(a)(2)(ii). In addition, the petition under 37 CFR 1.78(a)(3) must be accompanied by:

> **(1)** the reference required by 35 U.S.C. § 120 and 37 CFR 1.78(a)(2)(i) of the prior-filed application, unless previously submitted;[1]
> **(2)** the surcharge set forth in § 1.17(t); and
> **(3)** a statement that the entire delay between the date the claim was due under 37 CFR 1.78(a)(2)(ii) and the date the claim was filed was unintentional. The Commissioner may require additional information where there is a question whether the delay was unintentional.

---

[1] Any nonprovisional application or international application designating the United States of America claiming the benefit of one or more prior-filed copending applications or international applications designating the United States of America must contain or be amended to contain a reference (amendment to the first line of the specification following the title or in an application data sheet (ADS) to each such prior-filed application, identifying it by application number (consisting of the series code and serial number) or international application number and international filing date filing date and indicating the relationship of the applications. Cross references to other related applications may be made when appropriate (*see* § 1.14).

The instant pending application was filed on May 30, 2002, and was pending at the time of filing of the instant petition. A reference to the prior-filed nonprovisional application has been included in an application data sheet as required by 37 CFR 1.78(a)(2)(iii).

The instant nonprovisional application was filed after November 29, 2000, and the claim herein for the benefit of priority to the prior-filed nonprovisional application is submitted after expiration of the period specified in 37 CFR 1.78(a)(2)(ii). Also, the reference to the prior-filed nonprovisional application was submitted during the pendency of the instant nonprovisional application, for which the claim for benefit of priority is sought. *See* 35 U.S.C. § 120. Accordingly, having found that the instant petition for acceptance of an unintentionally delayed claim for the benefit of priority under 35 U.S.C. § 120 to the prior-filed nonprovisional application satisfies the conditions of 37 CFR 1.78(a)(3), the petition is granted.

The granting of the petition to accept the delayed benefit claim to the prior-filed application under 37 CFR 1.78(a)(3) should not be construed as meaning that the instant application is entitled to the benefit of the prior-filed application. In order for the instant application to be entitled to the benefit of the prior-filed application, all other requirements under 35 U.S.C. § 120 and 37 CFR 1.78(a)(1) and (a)(2) must be met. Similarly, the fact that the corrected Filing Receipt accompanying this decision on petition includes the prior-filed application should not be construed as meaning that applicant is entitled to the claim for benefit of priority to the prior-filed application noted thereon. Accordingly, the examiner will, in due course, consider this benefit claim and determine whether the instant application is entitled to the benefit of the earlier filing date.

A corrected Filing Receipt, which includes the priority claim to the prior-filed nonprovisional application, accompanies this decision on petition.

Any inquiries concerning this decision may be directed to the undersigned at (571) 272-3208.

This application is being referred to Technology Center Art Unit 1745 for consideration by the examiner of applicant's entitlement to claim benefit of priority under 35 U.S.C. § 120 to prior-filed nonprovisional Application No. 09/749,297, filed December 27, 2000.

Karen Creasy

Karen Creasy
Petitions Examiner
Office of Petitions
Office of the Deputy Commissioner
for Patent Examination Policy

ATTACHMENT: Corrected Filing Receipt

UNITED STATES PATENT AND TRADEMARK OFFICE

COMMISSIONER FOR PATENTS
UNITED STATES PATENT AND TRADEMARK OFFICE
P.O. BOX 1450
ALEXANDRIA, VA 22313-1450
www.uspto.gov

Paper No. None

MACPHERSON KWOK CHEN & HEID LLP
1762 TECHNOLOGY DRIVE, SUITE 226
SAN JOSE CA 95110

COPY MAILED

SEP 29 2006

OFFICE OF PETITIONS

In re Application of :
Robert Marc Zeidman :
Application No. 10/158,772 : DECISION ON PETITION
Filed: May 31, 2002 : UNDER 37 CFR 1.78(a)(3)
Title: APPARATUS AND METHOD FOR :
CONNECTING A HARDWARE EMULATOR :
TO A COMPUTER PERIPHERAL :

This is a decision on the petition under 37 CFR 1.78(a)(3), filed June 1, 2006, to accept an unintentionally delayed claim under 35 U.S.C. § 120 for the benefit of priority to the prior-filed nonprovisional application set forth in the amendment, filed concurrently with the present petition.

The petition is **GRANTED**.

A petition for acceptance of a claim for late priority under 37 CFR 1.78(a)(3) is only applicable to those applications filed on or after November 29, 2000. Further, the petition is appropriate only after the expiration of the period specified in 37 CFR 1.78(a)(2)(ii). In addition, the petition under 37 CFR 1.78(a)(3) must be accompanied by:

1) the reference required by 35 U.S.C. § 120 and 37 CFR 1.78(a)(2)(i) of the prior-filed application, unless previously submitted;
2) the surcharge set forth in § 1.17(t); and
3) a statement that the entire delay between the date the claim was due under 37 CFR 1.78(a)(2)(ii) and the date the claim was filed was unintentional. The Director may require additional information where there is a question whether the delay was unintentional.

All of the above requirements having been satisfied, the late claim for priority under 35 U.S.C. § 120 is accepted as being unintentionally delayed.

The granting of the petition to accept the delayed benefit claim to the prior-filed application under 37 CFR 1.78(a)(3) should not be construed as meaning that this application is entitled to the benefit of the prior-filed application. In order for this application to be entitled to the benefit of the prior-filed application, all other requirements under 35 U.S.C. § 120 and 37 CFR 1.78(a)(1) and (a)(2) must be met. Similarly, the fact that the corrected Filing Receipt accompanying this decision on petition includes the prior-filed application should not be construed as meaning that applicant is entitled to the claim for benefit of priority to the prior-filed application noted thereon. Accordingly, the examiner will, in due course, consider this benefit claim and determine whether the application is entitled to the benefit of the earlier filing date.

A corrected Filing Receipt, which includes the priority claim to the prior-filed nonprovisional application, accompanies this decision on petition.

This application is being forwarded to Technology Center Art Unit 2128 for consideration by the Examiner of applicant's entitlement to claim benefit of priority under 35 U.S.C. § 120 to the prior-filed application.

The Revocation of Power of Attorney with New Power of Attorney and Change of Correspondence Address has been entered and made of record.

Telephone inquiries regarding this decision should be directed to Senior Attorney Paul Shanoski at (571) 272-3225. All other inquiries concerning either the examination procedures or status of the application should be directed to the Technology Center.

Frances Hicks

Frances Hicks
Petitions Examiner
Office of Petitions
United States Patent and Trademark Office

ATTACHMENT: Corrected Filing Receipt

UNITED STATES PATENT AND TRADEMARK OFFICE

UNITED STATES DEPARTMENT OF COMMERCE
United States Patent and Trademark Office
Address: COMMISSIONER FOR PATENTS
P.O. Box 1450
Alexandria, Virginia 22313-1450
www.uspto.gov

APPL NO.	FILING OR 371 (c) DATE	ART UNIT	FIL FEE REC'D	ATTY.DOCKET NO	DRAWINGS	TOT CLMS	IND CLMS
10/158,772	05/31/2002	2128	671	M-8637-2P US	5	33	5

CONFIRMATION NO. 6703

32605
MACPHERSON KWOK CHEN & HEID LLP
1762 TECHNOLOGY DRIVE, SUITE 226
SAN JOSE, CA 95110

CORRECTED FILING RECEIPT

OC000000020443885

Date Mailed: 09/15/2006

Receipt is acknowledged of this regular Patent Application. It will be considered in its order and you will be notified as to the results of the examination. Be sure to provide the U.S. APPLICATION NUMBER, FILING DATE, NAME OF APPLICANT, and TITLE OF INVENTION when inquiring about this application. Fees transmitted by check or draft are subject to collection. Please verify the accuracy of the data presented on this receipt. **If an error is noted on this Filing Receipt, please mail to the Commissioner for Patents P.O. Box 1450 Alexandria Va 22313-1450. Please provide a copy of this Filing Receipt with the changes noted thereon. If you received a "Notice to File Missing Parts" for this application, please submit any corrections to this Filing Receipt with your reply to the Notice. When the USPTO processes the reply to the Notice, the USPTO will generate another Filing Receipt incorporating the requested corrections (if appropriate).**

Applicant(s)

Robert Marc Zeidman, Cupertino, CA;

Power of Attorney: None

Domestic Priority data as claimed by applicant

This application is a CIP of 09/751,573 12/28/2000 PAT 7,050,962

Foreign Applications

If Required, Foreign Filing License Granted: 07/01/2002

The country code and number of your priority application, to be used for filing abroad under the Paris Convention, is US10/158,772

Projected Publication Date: Not Applicable

Non-Publication Request: No

Early Publication Request: No

**** SMALL ENTITY ****

Title

Apparatus and method for connecting a hardware emulator to a computer peripheral

Preliminary Class
703

PROTECTING YOUR INVENTION OUTSIDE THE UNITED STATES

Since the rights granted by a U.S. patent extend only throughout the territory of the United States and have no effect in a foreign country, an inventor who wishes patent protection in another country must apply for a patent in a specific country or in regional patent offices. Applicants may wish to consider the filing of an international application under the Patent Cooperation Treaty (PCT). An international (PCT) application generally has the same effect as a regular national patent application in each PCT-member country. The PCT process **simplifies** the filing of patent applications on the same invention in member countries, but **does not result** in a grant of "an international patent" and does not eliminate the need of applicants to file additional documents and fees in countries where patent protection is desired.

Almost every country has its own patent law, and a person desiring a patent in a particular country must make an application for patent in that country in accordance with its particular laws. Since the laws of many countries differ in various respects from the patent law of the United States, applicants are advised to seek guidance from specific foreign countries to ensure that patent rights are not lost prematurely.

Applicants also are advised that in the case of inventions made in the United States, the Director of the USPTO must issue a license before applicants can apply for a patent in a foreign country. The filing of a U.S. patent application serves as a request for a foreign filing license. The application's filing receipt contains further information and guidance as to the status of applicant's license for foreign filing.

Applicants may wish to consult the USPTO booklet, "General Information Concerning Patents" (specifically, the section entitled "Treaties and Foreign Patents") for more information on timeframes and deadlines for filing foreign patent applications. The guide is available either by contacting the USPTO Contact Center at 800-786-9199, or it can be viewed on the USPTO website at http://www.uspto.gov/web/offices/pac/doc/general/index.html.

For information on preventing theft of your intellectual property (patents, trademarks and copyrights), you may wish to consult the U.S. Government website, http://www.stopfakes.gov. Part of a Department of Commerce initiative, this website includes self-help "toolkits" giving innovators guidance on how to protect intellectual property in specific countries such as China, Korea and Mexico. For questions regarding patent enforcement issues, applicants may call the U.S. Government hotline at 1-866-999-HALT (1-866-999-4158).

LICENSE FOR FOREIGN FILING UNDER
Title 35, United States Code, Section 184
Title 37, Code of Federal Regulations, 5.11 & 5.15

GRANTED

The applicant has been granted a license under 35 U.S.C. 184, if the phrase "IF REQUIRED, FOREIGN FILING LICENSE GRANTED" followed by a date appears on this form. Such licenses are issued in all applications where the conditions for issuance of a license have been met, regardless of whether or not a license may be required as set forth in 37 CFR 5.15. The scope and limitations of this license are set forth in 37 CFR 5.15(a) unless an earlier license has been issued under 37 CFR 5.15(b). The license is subject to revocation upon written notification. The date indicated is the effective date of the license, unless an earlier license of similar scope has been granted under 37 CFR 5.13 or 5.14.

This license is to be retained by the licensee and may be used at any time on or after the effective date thereof unless it is revoked. This license is automatically transferred to any related applications(s) filed under 37 CFR 1.53(d). This license is not retroactive.

The grant of a license does not in any way lessen the responsibility of a licensee for the security of the subject matter as imposed by any Government contract or the provisions of existing laws relating to espionage and the national security or the export of technical data. Licensees should apprise themselves of current regulations especially with respect to certain countries, of other agencies, particularly the Office of Defense Trade Controls, Department of State (with respect to Arms, Munitions and Implements of War (22 CFR 121-128)); the Bureau of Industry and Security, Department of Commerce (15 CFR parts 730-774); the Office of Foreign Assets Control, Department of Treasury (31 CFR Parts 500+) and the Department of Energy.

NOT GRANTED

No license under 35 U.S.C. 184 has been granted at this time, if the phrase "IF REQUIRED, FOREIGN FILING LICENSE GRANTED" DOES NOT appear on this form. Applicant may still petition for a license under 37 CFR 5.12, if a license is desired before the expiration of 6 months from the filing date of the application. If 6 months has lapsed from the filing date of this application and the licensee has not received any indication of a secrecy order under 35 U.S.C. 181, the licensee may foreign file the application pursuant to 37 CFR 5.15(b).

UNITED STATES PATENT AND TRADEMARK OFFICE

COMMISSIONER FOR PATENTS
UNITED STATES PATENT AND TRADEMARK OFFICE
P.O. BOX 1450
ALEXANDRIA, VA 22313-1450
www.uspto.gov

Louis A. Morris
Akzo Nobel Inc. - Intellectual Property Department
7 Livingstone Avenue
Dobbs Ferry, NY 10522

COPY MAILED

SEP 22 2005

OFFICE OF PETITIONS

In re Patent No. 6,828,153 :
Issued: December 7, 2004 :
Application No. 10/158,795 : PATENT TERM ADJUSTMENT
Filed: May 31, 2002 :
Atty. Dkt. No.: ACH2877US :

This is a decision on the "REQUEST FOR RECONSIDERATION OF PATENT TERM ADJUSTMENT UNDER 37 C.F.R. § 1.705," filed December 17, 2004. This matter is being treated under 37 CFR 1.705(d) as an application for patent term adjustment (PTA).

The application for patent term adjustment ("PTA") under 37 CFR 1.705(d) is **GRANTED**.

The above-identified application matured into U.S. Patent No. 6,828,153 on December 7, 2004. The instant request for reconsideration was timely filed December 17, 2004 in accordance with 37 C.F.R. § 1.705(d). The patent issued with a PTA of 195 days. Applicant argues that the adjustment of 287 days was improperly reduced 92 days.

A review of the application history reveals that in accordance with 37 CFR 1.702(a)(1), an adjustment of 287 days can be attributed to the Office.

On September 7, 2004, applicants submitted an "INTERVIEW SUMMARY" in response to an examiner's interview summary. As the examiner's interview summary, mailed August 25, 2004, permitted applicants one month from the mail date of the interview summary to submit a statement of the summary of the interview, the letter submitted September 28, 2004 is not deemed a failure to engage in reasonable efforts to conclude prosecution (or processing) within the meaning of 37 CFR 1.704.

Thus, at the time of issuance, the patent was entitled to a PTA 287 days, as argued by applicants. The PTA indicated on the patent is to be corrected by issuance of a certificate of correction showing a revised Patent Term Adjustment of 287 days.

This application file will be forwarded to the Certificate of Corrections branch for issuance of a certificate of correction to indicate that the term of this patent is extended or adjusted under 35 U.S.C. 154(b) by 287 days.

The Office acknowledges submission of the required application fee of $200.00.

Telephone inquiries specific to this matter should be directed to Petitions Attorney Alesia M. Brown at (571) 272-3205.

Kery Fries

Kery Fries
Senior Legal Advisor
Office of Patent Legal Administration
Office of Deputy Commissioner
for Patent Examination Policy

Cc: Draft Certificate of Corrected Adjusted Patent Calculation

UNITED STATES PATENT AND TRADEMARK OFFICE

PET DEC

COMMISSIONER FOR PATENTS
UNITED STATES PATENT AND TRADEMARK OFFICE
P.O. BOX 1450
ALEXANDRIA, VA 22313-1450
www.uspto.gov

Mailed: JUN - 9 2004

spg
Paper Number _____

In re application of
Yoshiaki Shimizu et al.
Serial No. 10/158,804
Filed: June 3, 2002
For: OPTICAL FIBER MANUFACTURE METHOD INCLUDING ELONGATING A PREFORM IN A VERTICAL DIRECTION AND A HORIZONTAL DIRECTION

DECISION ON PETITION

This is a response to the PETITION TO WITHDRAW HOLDING OF ABANDONMENT PURSUANT TO 37 C.F.R. § 1.181(a) filed February 17, 2004. The petition requests that the abandonment, as set forth in the Notice of Abandonment of February 4, 2004, be withdrawn since the applicant did timely file a response on December 22, 2003.

DECISION

The instant request has been accepted as a petition to withdraw the holding of abandonment under the provisions of 37 CFR 1.181 (no fee) - no abandonment-in-fact. A review of the USPTO application file reveals that applicant's response, RESPONSE AND AMENDMENT PERSUANT TO 37 C.F.R. § 1.111 and PETITION FOR EXTENSION OF TIME UNDER 37 CFR 1.136(a), were properly filed on December 22, 2003 in view of the fact that the originally filed papers having a Patent and Trademark Office date stamp of December 22, 2003 thereon have been located in the USPTO application file. Accordingly, any holding of abandonment is hereby vacated, and the application has been returned to pending status.

The application shall be forwarded to the examiner for processing and consideration of the papers filed December 22, 2003.

The Petition is **GRANTED**.

Jacqueline Stone, Director
Technology Center 1700
Chemical and Materials Engineering

PILLSBURY WINTHROP LLP
INTELLECTUAL PROPERTY GROUP
1600 TYSONS BOULEVARD
MCLEAN VA 22102

UNITED STATES PATENT AND TRADEMARK OFFICE

COMMISSIONER FOR PATENTS
UNITED STATES PATENT AND TRADEMARK OFFICE
P.O. BOX 1450
ALEXANDRIA, VA 22313-1450
www.uspto.gov

HUMAN GENOME SCIENCES INC
INTELLECTUAL PROPERTY DEPT.
14200 SHADY GROVE ROAD
ROCKVILLE MD 20850

COPY MAILED

MAR 0 5 2004

OFFICE OF PETITIONS

Applicant: Parry et al.
Appl. No.: 10/158,825
Filing Date: June 3, 2002
Title: METHODS AND COMPOSITIONS FOR MODULATING ACE-2 ACTIVITY
Attorney Docket No.: PF555
Pub. No.: US 2003/0138894 A1
Pub. Date: July 24, 2003

This is a decision on the request for corrected patent application publication under 37 CFR 1.221(b), filed on September 22, 2003 for the above-identified application.

The request is granted.

While this request has been granted, Applicant is advised that the error in the publication may have been caused by the poor quality of the text in the application as originally filed. Applicant may want to consider filing applications with cleaner text in the future to prevent errors in the publication of other applications.

The corrected patent application publication will be published in due course.

Inquires concerning this communication should be directed to Mark Polutta at (703) 308-8122 (voice) or (703) 746-3465 (facsimile).

Mark O. Polutta

Mark O. Polutta
Office of Patent Legal Administration
Office of the Deputy Commissioner
for Patent Examination Policy

UNITED STATES PATENT AND TRADEMARK OFFICE

COMMISSIONER FOR PATENTS
UNITED STATES PATENT AND TRADEMARK OFFICE
P.O. BOX 1450
ALEXANDRIA, VA 22313-1450
www.uspto.gov

Paper No. 8

THE MCCALLUM LAW FIRM, LLC
132 KOLAR COURT
ERIE, CO 80516

MAIL

MAR 25 2004

DIRECTOR OFFICE
TECHNOLOGY CENTER 2600

In re Application of
Scaman, et al.

Application No. 10/158,837
Filed: May 31, 2002
For: INCIDENT RECORDING SECURE DATABASE

DECISION ON REQUEST TO WITHDRAW FROM RECORD

This is a decision on the Request for Withdrawal as attorney or agent and change of address filed on February 19, 2004.

A grantable request to withdraw as attorney/agent of record must:
(1) indicate the present mailing address of the attorney(s)/agent(s) who seek(s) to withdraw, and
(2) be signed by each attorney/agent seeking to withdraw or clearly be signed on their behalf, and
(3) be *approved* at least thirty (30) days prior to the maximum extendable period for response to any outstanding Office Action, and
(4) indicate the address to which future correspondence should be mailed.

Petitioner has met all of the above. Accordingly, the request is **GRANTED**.

All attorneys/agents of record are withdrawn.

All future communications from the Office will be directed to the address listed below until otherwise notified by applicant. Applicant is reminded of the obligation to promptly notify the Patent and Trademark Office of any change in correspondence address to ensure receipt of all communications from the Office.

Kenneth Wieder
Special Program Examiner
Technology Center 2600
Communications
(703) 305-4710

CC: Jennifer M. McCallum
The McCallum Law Firm, LLC
132 Kolar Court
Erie, CO 80516

UNITED STATES PATENT AND TRADEMARK OFFICE

COMMISSIONER FOR PATENTS
UNITED STATES PATENT AND TRADEMARK OFFICE
P.O. BOX 1450
ALEXANDRIA, VA 22313-1450
www.uspto.gov

Paper No. 6

MAIL

MAY 1 8 2004

DIRECTOR OFFICE
TECHNOLOGY CENTER 2100

LaCasse & Associates, LLC
1725 Duke Street
Suite 650
Alexandria, Virginia 22314

In re Application of: Steve Wirts et al.	)	**DECISION ON PETITION FOR ACCELERATED EXAMINATION UNDER M.P.E.P. §708.02(VIII)**
Application No.: 10/158,911	)	
Filed: June 3, 2002	)	
For: APPLICATION DEVELOPMENT ACCELERATION EMPLOYING DECLARATIVE USER INTERFACES	)	

This is a decision on the petition, filed February 10, 2004 under 37 C.F.R. §1.102(d) and M.P.E.P. §708.02(VIII): Accelerated Examination, to make the above-identified application special.

M.P.E.P. §708.02, Section VIII which sets out the prerequisites for a grantable petition for Accelerated Examination under 37 C.F.R. §1.102(d) states in relevant part:

A new application (one which has not received any examination by the examiner) may be granted special status provided that applicant (and this term includes applicant's attorney or agent) complies with each of the following items:

(a) Submits a petition to make special accompanied by the fee set forth in 37 CFR 1.17(h);

(b) ***Presents all claims directed to a single invention***, or if the Office determines that all the claims presented are not obviously directed to a single invention, will make an election without traverse as a prerequisite to the grant of special status.

(c) Submits a statement(s) that a pre - examination search was made, listing the field of search by class and subclass, publication, Chemical Abstracts, foreign patents, etc. A search made by a foreign patent office satisfies this requirement;

(d) Submits one copy each of the references deemed most closely related to the subject matter encompassed by the claims if said references are not already of record; and

(e) ***Submits a detailed discussion*** of the references, which discussion points out, with the particularity required by 37 CFR 1.111(b) and (c), how the claimed subject matter is patentable over the references.

> In those instances where the request for this special status does not meet all the prerequisites set forth above, ***applicant will be notified and the defects in the request will be stated***. The application will remain in the status of a new application awaiting action in its regular turn. In those instances where a request is defective in one or more respects, applicant will be given one opportunity to perfect the request in a renewed petition to make special. If perfected, the request will then be granted. If not perfected in the first renewed petition, any additional renewed petitions to make special may or may not be considered at the discretion of the Group Special Program Examiner.

Applicant's submission is deficient in that it does not comply with (b), and (e) above. That is, it does not indicate that Applicant will make an election without traverse if the Office determines that all claims are not obviously directed to a single invention, and it does not contain a detailed discussion of the references as required by section (e) above to the extent required by 37 CFR 1.111(b) and (c). The submission does not satisfy the requirement, as it does not provide a ***detailed discussion*** of the references and it does not point out how the ***claimed subject matter is patentable over the references***

Accordingly, the Petition is **DISMISSED**. The application file is being forwarded to Central Files to await examination in its proper turn based on its effective filing date.

Any request for reconsideration must be filed within two months of the mailing date of this decision.

Pinchus M. Laufer
Special Programs Examiner
Technology Center 2100
Computer Architecture, Software, and Information Security
(703) 306-4160

UNITED STATES PATENT AND TRADEMARK OFFICE

COMMISSIONER FOR PATENTS
UNITED STATES PATENT AND TRADEMARK OFFICE
P.O. BOX 1450
ALEXANDRIA, VA 22313-1450
www.uspto.gov

MAIL

JUL 07 2004

DIRECTOR OFFICE
TECHNOLOGY CENTER 2100

Paper No. 9

LaCasse & Associates, LLC
1725 Duke Street
Suite 650
Alexandria, VA 22314

In re Application of: Wirts et al.
Application No. 10/158,911
Filed: June 3, 2002
For: APPLICATION DEVELOPMENT ACCELERATION EMPLOYING DECLARATIVE USER INTERFACES

DECISION ON PETITION FOR ACCELERATED EXAMINATION UNDER M.P.E.P.§708.02(VIII)

This is a decision on the request for reconsideration filed May 27, 2004, regarding the petition filed on February 10, 2004 under 37 C.F.R. 102(d) and M.P.E.P. § 708.02(VIII): Accelerated Examination, to make the above-identified application special.

The Petition is **GRANTED**.

M.P.E.P. § 708.02, Section VIII which sets out the prerequisites for a grantable petition for Accelerated Examination under 37 C.F.R. § 102(d) states in relevant part:

A new application (one which has not received any examination by the examiner) may be granted special status provided that applicant (and this term includes applicant's attorney or agent) complies with each of the following items:

(a) Submits a petition to make special accompanied by the fee set forth in 37 CFR 1.17(h);

(b) Presents all claims directed to a single invention, or if the Office determines that all the claims presented are not obviously directed to a single invention, will make an election without traverse as a prerequisite to the grant of special status;

(c) Submits a statement(s) that a pre-examination search was made, listing the field of search by class and subclass, publication, Chemical Abstracts, foreign patents, etc. The pre-examination search must be directed to the invention as claimed in the application for which special status is requested. A search made by a foreign patent office satisfies this requirement;

(d) Submits one copy each of the references deemed most closely related to the subject matter encompassed by the claims if said references are not already of record; and

(e) Submits a detailed discussion of the references, which discussion points out, with the particularity required by 37 CFR 1.111 (b) and (c), how the claimed subject matter is patentable over the references.

With respect to section (b) above, applicant has indicated that an election will be made without traverse if a requirement is made on the part of the USPTO.

With respect to section (e) above and in light of petitioner's submissions on February 10, 2004 and May 27, 2004, it is noted that in the submission of February 10, 2004, a total of 14 references (U.S. and foreign patents, U.S. patent publications, literature and an online commercial database) appear to be deemed "related art" highlighted in bold. However, the supplemental submission of May 27, 2004 provided a detailed discussion of only 12 of those highlighted references, omitting the foreign patent to Burd et al. (EP 1156428 A2) and the online commercial database entitled "Build feature-rich world-class Web applications". Such omission appears to be an inadvertent oversight on petitioner's part. Petitioner should ensure that a detailed discussion of **all** references which are deemed most closely related to the subject matter encompassed by the claims are presented in the detailed description, which discussion points out how the claimed subject matter is patentable over the references. Petitioner may wish to submit a detailed discussion of those references (identified above) in order to complete the record.

As Petitioner's submissions filed February 10 and May 27, 2004 substantially meet the criteria set forth above, the petition to Make Special is **GRANTED**.

The application file is being forwarded to the Examiner for accelerated examination in accordance with the procedures set forth in M.P.E.P. §708.02, Section VIII. If the application is subsequently allowed, it will be given priority for printing. See M.P.E.P. §1309.

7/1/04

Brian L. Johnson
Special Program Examiner
Technology Center 2100
Computer Architecture, Software and Information Security
703-308-0885

BLJ: 6/29/04

UNITED STATES PATENT AND TRADEMARK OFFICE

COMMISSIONER FOR PATENTS
UNITED STATES PATENT AND TRADEMARK OFFICE
P.O. BOX 1450
ALEXANDRIA, VA 22313-1450
www.uspto.gov

STAAS & HALSEY LLP
SUITE 700
1201 NEW YORK AVENUE, N.W.
WASHINGTON, DC 20005

COPY MAILED

JUN 2 0 2005

OFFICE OF PETITIONS

In re Application of :
Seung-beom Choi, et al. :
Application No. 10/158,920 : ON PETITION
Filed: June 3, 2002 :
Attorney Docket No. 1572.1016 :

This is a decision on the petition, filed June 13, 2005, under 37 CFR 1.313(c)(2) to withdraw the above-identified application from issue after payment of the issue fee.

The petition is **GRANTED**.

The above-identified application is withdrawn from issue for consideration of a submission under 37 CFR 1.114 (request for continued examination). See 37 CFR 1.313(c)(2).

Petitioner is advised that the issue fee paid on June 1, 2005, in the above-identified application cannot be refunded. If, however, the above-identified application is again allowed, petitioner may request that it be applied towards the issue fee required by the new Notice of Allowance. [1]

Telephone inquiries relating to this decision should be directed to the undersigned at (571) 272-3204.

The application is being referred to Technology Center AU 2182 for further processing of the request for continued examination under 37 CFR 1.114.

Sherry D. Brinkley
Petitions Examiner
Office of Petitions
Office of the Deputy Commissioner
for Patent Examination Policy

[1]The request to apply the issue fee to the new Notice may be satisfied by completing and returning the new Issue Fee Transmittal Form PTOL-85(b), which includes the following language thereon: "Commissioner for Patents is requested to apply the Issue Fee and Publication Fee (if any) or re-apply any previously paid issue fee to the application identified above." Petitioner is advised that, whether a fee is indicated as being due or not, the Issue Fee Transmittal Form **must** be completed and timely submitted to avoid abandonment. Note the language in bold text on the first page of the Notice of Allowance and Fee(s) Due (PTOL-85).

UNITED STATES PATENT AND TRADEMARK OFFICE

Commissioner for Patents
United States Patent and Trademark Office
P.O. Box 1450
Alexandria, VA 22313-1450
www.uspto.gov

LARSON NEWMAN ABEL POLANSKY & WHITE, LLP
5914 WEST COURTYARD DRIVE
SUITE 200
AUSTIN, TX 78730

COPY MAILED
AUG 1 0 2006
OFFICE OF PETITIONS

In re Application of	:	
Alexander Hoefler, et. al.	:	
Application No. 10/158,991	:	ON PETITION
Filed: May 31, 2002	:	
Attorney Docket No. 1280.SC11295TC	:	

This is a decision on the petition under 37 CFR 1.137(b), filed by facsimile transmission on March 29, 2006, to revive the above-identified application.

The application became abandoned for failure to timely respond to the Notice of Allowability mailed September 27, 2005. A Notice of Abandonment was mailed on March 17, 2006.

The petition satisfies the requirements of 37 CFR 1.137(b) in that petitioner has supplied (1) the reply in the form of two (2) sheets of formal drawings containing Figures 1, 2, 6A and 6B; (2) the petition fee of $1,500; and (3) an adequate statement of unintentional delay. Therefore, the petition is **GRANTED**.

This application file is being referred to the Office of Publications to be processed into a patent.

Telephone inquiries concerning this decision should be directed to the undersigned at (571) 272-3226.

Andrea Smith
Petitions Examiner
Office of Petitions

UNITED STATES PATENT AND TRADEMARK OFFICE

Commissioner for Patents
United States Patent and Trademark Office
P.O. Box 1450
Alexandria, VA 22313-1450
www.uspto.gov

BANNER & WITCOFF
1001 G STREET NW
SUITE 1100
WASHINGTON DC 20001

COPY MAILED

JUN 17 2005

OFFICE OF PETITIONS

In re Application of	:	
James Y. Koo	:	
Application No. 10/158,996	:	ON PETITION
Filed: June 3, 2002	:	
Attorney Docket No. 003797.00292	:	

This is a decision on the petition, filed June 14, 2005 and supplemented on June 15, 2005, under 37 CFR 1.313(c)(2) to withdraw the above-identified application from issue after payment of the issue fee.

The petition is **GRANTED.**

The above-identified application is withdrawn from issue for consideration of a submission under 37 CFR 1.114 (request for continued examination). See 37 CFR 1.313(c)(2).

Petitioner is advised that the issue fee paid on October 28, 2004 in the above-identified application cannot be refunded. If, however, the above-identified application is again allowed, petitioner may request that it be applied towards the issue fee required by the new Notice of Allowance.[1]

Telephone inquiries should be directed to the undersigned at (571) 272-3208.

The examiner of Technology Center AU 2673 will consider the request for continued examination under 37 CFR 1.114.

Karen Creasy
Petitions Examiner
Office of Petitions
Office of the Deputy Commissioner
for Patent Examination Policy

---

[1] The request to apply the issue fee to the new Notice may be satisfied by completing and returning the new Issue Fee Transmittal Form PTOL-85(b), which includes the following language thereon: "Commissioner for Patents is requested to apply the Issue Fee and Publication Fee (if any) or re-apply any previously paid issue fee to the application identified above." Petitioner is advised that, whether a fee is indicated as being due or not, the Issue Fee Transmittal Form **must** be completed and timely submitted to avoid abandonment. Note the language in bold text on the first page of the Notice of Allowance and Fee(s) Due (PTOL-85).

SPE RESPONSE FOR CERTIFICATE OF CORRECTION

DATE : 8-28-09 Paper No.: _____

TO SPE OF : ART UNIT 2677

SUBJECT : Request for Certificate of Correction for Appl. No.: 10/158996 Patent No.: 6987585

Please respond to this request for a certificate of correction within 7 days.

FOR IFW FILES: Please check Ref. + Drawings

Please review the requested changes/corrections as shown in the **COCIN** document(s) in the IFW application image. No new matter should be introduced, nor should the scope or meaning of the claims be changed.

Please complete the response (see below) and forward the completed response to scanning using document code **COCX**.

FOR PAPER FILES:

Please review the requested changes/corrections as shown in the attached certificate of correction. Please complete this form (see below) and forward it with the file to:

Certificates of Correction Branch (C of C)
Randolph Square 9C62-D
Palm Location 7580

Ennis Young
Certificates of Correction Branch
703-756-1542

Thank You For Your Assistance

The request for issuing the above-identified correction(s) is hereby:
Note your decision on the appropriate box.

- ☒ **Approved** — All changes apply.
- ☐ **Approved in Part** — Specify below which changes do not apply.
- ☐ **Denied** — State the reasons for denial below.

Comments: _____

RICHARD HJERPE
SUPERVISORY PATENT EXAMINER
TECHNOLOGY CENTER 2600

SPE Art Unit

UNITED STATES PATENT AND TRADEMARK OFFICE

COMMISSIONER FOR PATENTS
UNITED STATES PATENT AND TRADEMARK OFFICE
P.O. BOX 1450
ALEXANDRIA, VA 22313-1450
www.uspto.gov

APR - 9 2004

Paper No. 5

In re Application of
Tung-I Chen
Application No. 10/159,036
Filed: March 10, 2004
Attorney Docket No. FP8545

DECISION ON PETITION

This is a decision on the petition filed by facsimile transmission on March 10, 2004 by which petitioner requests withdrawal of the examiner's holding that this application stands abandoned for failure to file a reply to the Office letter dated July 2, 2003. The petition is being considered pursuant to 37 CFR 1.181, and no fee is required.

The petition is dismissed.

Petitioner alleges that the application is not abandoned because petitioner never received the Office letter in question. Petitioner has not, however, supported this allegation with a showing that the Office letter was not received. Petitioner's attention is directed to Section 711.03(c) of the Manual of Patent Examining Procedure with respect to the requirements for establishing that an Office communication was not received. A copy of MPEP 711.03(c) is attached to this decision.

Petitioner may file a renewed petition, without fee, supplying the required showing. Any renewed petition that is filed must be filed within two months of the date of this decision. See 37 CFR 1.181(f).

PETITION DISMISSED.

E. Rollins-Cross, Director
Technology Center 3700

Chen Tung-I
P.O. Box 82-144 Via Air Mail
Taipei, Taiwan

UNITED STATES PATENT AND TRADEMARK OFFICE

Commissioner for Patents
United States Patent and Trademark Office
P.O. Box 1450
Alexandria, VA 22313-1450
www.uspto.gov

LEONG C LEI
PMB # 1008
1867 YGNACIO VALLEY ROAD
WALNUT CREEK CA 94598

COPY MAILED

JAN 09 2007

OFFICE OF PETITIONS

In re Application of	:	
Chiang, Ming Huang	:	
Application No. 10/159,039	:	ON PETITION
Filed: June 3, 2002	:	
Attorney Docket No. FP8218	:	

This is a decision on the petition under 37 C.F.R. § 1.137(b), filed September 28, 2006, to revive the above-identified application.

The petition is **GRANTED.**

The petition satisfies the conditions for revival pursuant to the provisions of 37 CFR 1.137(b) in that (1) the reply in the form of a Request for Continued Examination (RCE); (2) the petition fee; and (3) the required statement of unintentional delay have been received. Accordingly, the response has been accepted as having been unintentionally delayed.

This matter is being referred to Technology Center 2800 for processing of the Request for Continued Examination under 37 CFR 1.114 filed with the instant petition.

Telephone inquiries regarding this decision should be directed to the undersigned at (571) 272-3206.

Liana Walsh
Petitions Examiner
Office of Petitions

UNITED STATES PATENT AND TRADEMARK OFFICE

COMMISSIONER FOR PATENTS
UNITED STATES PATENT AND TRADEMARK OFFICE
P.O. BOX 1450
ALEXANDRIA, VA 22313-1450
WWW.USPTO.GOV

Paper No. None

AMIN & TUROCY, LLP
1900 EAST 9TH STREET, NATIONAL CITY CENTER
24TH FLOOR,
CLEVELAND OH 44114

COPY MAILED

JUN 01 2004

OFFICE OF PETITIONS

In re Application of
Viatcheslav V. Dombrovski
Application No. 10/159,074
Filed: May 31, 2002
Attorney Docket No.: 02RE089
Title: ROTATING BACK IRON FOR SYNCHRONOUS MOTORS/GENERATORS

DECISION ON PEITTION UNDER 37 C.F.R. §1.137(b)

This is a decision on the petition filed March 8, 2004, pursuant to 37 C.F.R. §1.137(b)[1], to revive the above-identified application.

The above-identified application became abandoned for failure to reply within the meaning of 37 C.F.R §1.113 in a timely manner to the final Office action mailed June 17, 2003, which set a shortened statutory period for reply of three (3) months. On August 15, 2003, an after-final amendment was received. The after-final amendment failed to place the application in condition for allowance, and on October 30, 2003, an advisory action was mailed. On December 10, 2003 a second after-final amendment was received, along with a three-month extension of time, and on February 17, 2004, another advisory action was mailed. No further responses were received, and no further extensions of time pursuant to 37 CFR §1.136 were obtained. Accordingly, the above-identified application became abandoned on December 18, 2003.

1 A grantable petition pursuant to 37 CFR §1.137(b) must be accompanied by:
(1) The reply required to the outstanding Office action or notice, unless previously filed;
(2) The petition fee as set forth in § 1.17(m);
(3) A statement that the entire delay in filing the required reply from the due date for the reply until the filing of a grantable petition pursuant to this paragraph was unintentional. The Commissioner may require additional information where there is a question whether the delay was unintentional, and;
(4) Any terminal disclaimer (and fee as set forth in §1.20(d)) required pursuant to paragraph (d) of this section.

With this petition, the petitioner submitted a response in the form of a Notice of Appeal, along with an Appeal Brief, submitted the appropriate fees for both, paid the petition fee, and made the proper statement of unintentional delay.

Accordingly, the petition is **GRANTED**.

Petitioner has also requested that the petition fee be waived, because he alleges that he submitted the Notice of Appeal on December 10, 2003, but included the wrong inventor name, serial number, title, and filing date. Obviously, there was no way for the Office to determine which application this facsimile transmission was associated with. As such, the petition fee will not be refunded, as this petition was not necessitated by any error on the part of the Office.

The Notice of Appeal filed on March 8, 2004, has been entered and made of record.

The application file is being forwarded to Technology Center 2800 for processing of the Notice of Appeal and the Appeal Brief, although it is noted that the Office incorrectly mailed an Examiner's Answer on May 25, 2004.

Telephone inquiries *concerning this decision* should be directed to the undersigned at (703) 305-0011.

Paul Shanoski
Senior Attorney
Office of Petitions
United States Patent and Trademark Office

UNITED STATES PATENT AND TRADEMARK OFFICE

UNITED STATES DEPARTMENT OF COMMERCE
United States Patent and Trademark Office
Address: COMMISSIONER FOR PATENTS
P.O. Box 1450
Alexandria, Virginia 22313-1450
www.uspto.gov

ROSS D. SNYDER & ASSOCIATES, INC.
PO BOX 164075
AUSTIN, TX 78716-4075

Mail Date: 05/24/2010

Applicant	: Joseph Soetemans	: DECISION ON REQUEST FOR
Patent Number	: 7619886	: RECALCULATION of PATENT
Issue Date	: 11/17/2009	: TERM ADJUSTMENT IN VIEW
Application No	: 10/159,087	: OF WYETH AND NOTICE OF INTENT TO
Filed	: 05/31/2002	: ISSUE CERTIFICATE OF CORRECTION
		:

The Request for Recalculation is **GRANTED** to the extent indicated.

The patent term adjustment has been determined to be **1901** days. The USPTO will *sua sponte* issue a certificate of correction reflecting the amount of PTA days determined by the recalculation.

Prior to the issuance of the certificate of correction, the USPTO will afford patentee an opportunity to be heard and request reconsideration. Accordingly, patentee has **one month or thirty (30) days**, whichever is longer, to file a request for reconsideration of this patent term adjustment calculation. See 35 U.S.C. 154(b)(3)(B)(ii) and 37 CFR 1.322(a)(4). No extensions of time will be granted under 37 CFR 1.136.

Patentee should use document code PET.OP if electronically filing a request for reconsideration of this patent term adjustment calculation. The patentee must also include the information required by 37 CFR 1.705(b)(2) and the fee required by 37 CFR 1.18(e). If patentee does not file a timely request for reconsideration of this patent term adjustment calculation including the information required by 37 CFR 1.705(b)(2) and the fee required by 37 CFR 1.18(e), the USPTO will issue a certificate of correction reflecting the PTA determination noted above.

Patentee should be aware that in order to preserve the right to review in the United States District Court for the District of Columbia of the USPTO patent term adjustment determination, patentee must ensure that he or she also take the steps required under 35 U.S.C. 154(b)(4)(A) in a timely manner. Nothing in the request for recalculation should be construed as providing an alternative time frame for commencing a civil action under 35 U.S.C. 154(b)(4)(A).

Any questions concerning this decision should be directed to the Office of Patent Legal Administration at 571-272-7702.

UNITED STATES PATENT AND TRADEMARK OFFICE

Commissioner for Patents
United States Patent and Trademark Office
P.O. Box 1450
Alexandria, VA 22313-1450
www.uspto.gov

DICKSTEIN SHAPIRO MORIN & OSHINSKY LLP
2101 L Street, NW
Washington DC 20037

COPY MAILED

OCT 18 2005

OFFICE OF PETITIONS

In re Patent No. 6,921,398 :
Issue Date: July 26, 2005 :
Application No. 10/159,115 : ON PETITION
Filed: June 3, 2002 :
Attorney Docket Number: :
A8130.0131/P131

This is a decision regarding your request for acceptance of a fee deficiency submission under 37 CFR 1.28 filed September 22, 2005.

On September 1, 1998, the Court of Appeals for the Federal Circuit held that 37 CFR 1.28(c) is the sole provision governing the time for correction of the erroneous payment of the issue fee as a small entity. See DH Technology v. Synergystex International, Inc.. 154 F.33d 1333, 47 USPQ2d 1865 (Fed. Cir. Sept. 1, 1998).

The Office no longer investigates or rejects original or reissue applications under 37 CFR 1.56. 1098 Off. Gaz. Pat. Office 502 (January 3, 1989). Therefore nothing in this Notice is intended to imply that an investigation was done.

Your fee deficiency submission under 37 CFR 1.28 is hereby accepted and the petition is **GRANTED**.

Inquiries related to this communication should be directed to the Office of Petitions Staff at (571) 272-3282.

This file is being forwarded to the Files Repository.

Patricia Faison-Ball

Patricia Faison-Ball
Senior Petitions Attorney
Office of Petitions

UNITED STATES PATENT AND TRADEMARK OFFICE

COMMISSIONER FOR PATENTS
UNITED STATES PATENT AND TRADEMARK OFFICE
P.O. BOX 1450
ALEXANDRIA, VA 22313-1450
www.uspto.gov

Paper No. 7

LERNER AND GREENBERG, PA
P.O. BOX 2480
HOLLYWOOD, FL 33022-2480

MAIL

MAY 11 2004

DIRECTOR OFFICE
TECHNOLOGY CENTER 2600

In re Application of
Mau

Application No. 10/159116
Filed: May 31, 2002
For: SYSTEM, INTERFACE, AND METHOD FOR TWO-WAY CELLULAR CONTROL OF AUTOMOBILE ELECTRICAL SYSTEMS

DECISION ON REQUEST TO WITHDRAW FROM RECORD

This is a decision on the Request for Withdrawal as attorney or agent and change of address filed on April 19, 2004.

A grantable request to withdraw as attorney/agent of record must:
(1) indicate the present mailing address of the attorney(s)/agent(s) who seek(s) to withdraw, and
(2) be signed by each attorney/agent seeking to withdraw or clearly be signed on their behalf, and
(3) be *approved* at least thirty (30) days prior to the maximum extendable period for response to any outstanding Office Action, and
(4) indicate the address to which future correspondence should be mailed.

Petitioner has met all of the above. Accordingly, the request is **GRANTED**.

All attorneys/agents associated with Customer Number 24131 are withdrawn.

All future communications from the Office will be directed to the address listed below until otherwise notified by applicant. Applicant is reminded of the obligation to promptly notify the Patent and Trademark Office of any change in correspondence address to ensure receipt of all communications from the Office.

Kenneth A. Wieder

Kenneth Wieder
Special Program Examiner
Technology Center 2600
Communications
(703) 305-4710

CC: Kenny Yu
4747 Nob Hill Road Suite 13
Sunrise, Florida 33351

10/159131

SPE RESPONSE FOR CERTIFICATE OF CORRECTION

Paper No.: _____

DATE : 1-12-2005

TO SPE OF : ART UNIT 2855

SUBJECT : Request for Certificate of Correction on Patent No.: 6,786,101

A response is requested with respect to the accompanying request for a certificate of correction.

Please complete this form and return with file, within **7** days to:
Certificates of Correction Branch - PK 3-915
Palm location **7580** - Tel. No. 305-8309

With respect to the change(s) requested, correcting Office and/or Applicant's errors, should the patent read as shown in the certificate of correction? No new matter should be introduced, nor should the scope or meaning of the claims be changed.

Magdalene Talley

Thank You For Your Assistance — **Certificates of Correction Branch**

The request for issuing the above-identified correction(s) is hereby:
Note your decision on the appropriate box.

- ☒ **Approved** — **All** changes apply.
- ☐ **Approved in Part** — Specify below which changes **do not** apply.
- ☐ **Denied** — State the reasons for denial below.

Comments:

2855

UNITED STATES PATENT AND TRADEMARK OFFICE

COMMISSIONER FOR PATEN
UNITED STATES PATENT AND TRADEMARK OFFI
WASHINGTON, D.C. 2023
www.uspto.g

Paper No. 3

Josephine Young
KING & SPALDING
191 Peachtree Street, N.E., 45th Floor
Atlanta, GA 30303

MAILED

NOV - 1 2002

Technology Center 2100

In re Application of:	)	
William Frank Hackenberger	)	
Application No. 10/159,139	)	**DECISION ON REQUEST FOR**
Filed: May 31, 2002	)	**WITHDRAWAL AS ATTORNEY**
For: METHOD AND SYSTEM FOR IMPLEMENTING SECURITY DEVICES IN A NETWORK	)	

This is a decision on the Request To Withdraw from Representation filed September 4, 2002.

A grantable request to withdraw as attorney of record should indicate thereon the present mailing addresses of the attorney(s) who is/are withdrawing from the record and of the applicant. The request for withdrawal must be signed by every attorney seeking to withdraw or contain a clear indication that one attorney is signing on behalf of another/others. A request to withdraw will not be approved unless at least 30 (thirty) days would remain between the date of approval and the later of the expiration date of a time to file a response or the expiration date of the maximum time period which can be extended under 37 C.F.R. § 1. 136(a). The effective date of withdrawal being the date of decision and not the date of request. See M.P.E.P. § 402.06. 37 C.F.R. § 1.36 further requires that the applicant or patent owner be notified of the withdrawal of the attorney or agent.

The request filed September 4, 2002 meets all the requirements. Accordingly the request is **GRANTED**.

All future communications from the Office will be directed to the below-listed address until otherwise notified by applicant. This correspondence address is provided by the withdrawn attorney(s). Applicant is reminded of the obligation to promptly notify the Patent and Trademark Office (Office) of any change in correspondence address to ensure receipt of all communications from the Office.

James R. Matthews

FOR Vincent N. Trans
Special Programs Examiner
Technology Center 2100
Computer Architecture and Software
(703) 305-9750

UNITED STATES PATENT AND TRADEMARK OFFICE

Commissioner for Patents
United States Patent and Trademark Office
P. O. Box 1450
Alexandria, VA 22313-1450
www. uspto. gov

JAE Y. PARK
55 GRIFFIN ROAD SOUTH
BLOOMFIELD, CT 06002

COPY MAILED

JUL 2 7 2007

OFFICE OF PETITIONS

In re Patent No. 6,771,348	:	
Issue Date: August 3, 2004	:	
Application No. 10/159,149	:	ON PETITION
Filed: May 30, 2002	:	
Attorney Docket No. 21C-0022	:	

This is a decision on the petition filed March 23, 2007, which is being treated as a petition under 37 CFR 3.81(b).[1]

The petition is **granted.**

Telephone inquiries concerning this matter may be directed to the undersigned at (571) 272-3210. Any questions concerning the issuance of the Certificate of Correction should be directed to the Certificates of Correction Branch at (703) 305-8309.

This application is being forwarded to the Certificates of Correction Branch for issuance of the requested Certificate of Correction.

Irvin Dingle
Petitions Examiner
Office of Petitions

[1] See Official Gazette of June 22, 2004

10/159,177 Gealow et al.

SPE RESPONSE FOR CERTIFICATE OF CORRECTION

Paper No.: _____

DATE : November 7, 2005

TO SPE OF : ART UNIT 2685

SUBJECT : Request for Certificate of Correction on Patent No.: 6,950,672

A response is requested with respect to the accompanying request for a certificate of correction.

Please complete this form and return with file, within **7** days to:
Palm location **7580, Certificates of Correction Branch – South Tower – 9A22**
If response is for an IFW, **return to employee (named below) via PUBSCofC Team in MADRAS.**
With respect to the change(s) requested, correcting Office and/or Applicant's errors, should the patent read as shown in the certificate of correction (COCIN)? No new matter should be introduced, nor should the scope or meaning of the claims be changed.

Magdalene Talley

Thank You For Your Assistance

Certificates of Correction Branch
Tel. No. 703-308-9309 ext. 116

The request for issuing the above-identified correction(s) is hereby:
Note your decision on the appropriate box.

- ☑ **Approved** — **All** changes apply.
- ☐ **Approved in Part** — Specify below which changes **do not** apply.
- ☐ **Denied** — State the reasons for denial below.

Comments:

The published Fig.1, Fig2 are not according to the replacement Fig1, Fig2 of oct-24-2003.
Please correct them.

EDWARD F. URBAN
SUPERVISORY PATENT EXAMINER
TECHNOLOGY CENTER 2600
SPE

2685
Art Unit

OIPE IAP88
OCT 20 2005
PATENT & TRADEMARK OFFICE

C of C

IANDIORIO & TESKA

INTELLECTUAL PROPERTY LAW ATTORNEYS

Joseph S. Iandiorio
Kirk Teska
Jason D. Shanske
Thomas E. Thompkins, Jr.
Roy J. Coleman
David W. Poirier

260 BEAR HILL ROAD
WALTHAM, MASSACHUSETTS 02451-1018

Tel: (781) 890-5678
Fax: (781) 890-1150
e-mail: admin@iandiorio.com
web: www.iandiorio.com

October 18, 2005

Attn.: Certificate of Correction
Branch of the Patent Issue Division
Commissioner for Patents
P.O. Box 1450
Alexandria, VA 22313-1450

Certificate
OCT 24 2005
of Correction

SUBJECT:	Applicant:	Gealow *et al.*
	Serial No.:	10/159,177
	Filed:	May 30, 2002
	Patent No.:	6,950,672
	Issued:	September 27, 2005
	For:	CLOCK ENABLE SYSTEM
	Examiner:	Chow, Charles Chiang
	Group:	2685
	Docket No:	AD-220J

Dear Sir:

Enclosed is a Request for a Certificate of Correction including attachments, and a Certificate of Correction in duplicate regarding same for the subject application, for mistakes in the patent made by the Patent Office.

If for any reason this REQUEST is found to be INCOMPLETE, or if at any time it appears that a TELEPHONE CONFERENCE with counsel would help advance prosecution, please telephone the undersigned or his associates, collect in Waltham, Massachusetts at (781) 890-5678.

If any payment is found to be incorrect, please charge any deficiency or credit any overpayment to my Deposit Account No. 09-0002. A copy of this letter is enclosed for use by the Finance Branch in the event that it is necessary to make any charge or credit to my deposit account.

Kindly acknowledge receipt of the foregoing by returning the enclosed self-addressed postcard.

Sincerely,

T. Thomk

Thomas E. Thompkins, Jr.
Reg. No. 47,136

TET:ok
Enclosures

CERTIFICATE OF MAILING

I hereby certify that this correspondence is being deposited with the U.S. Postal Service with sufficient postage as first class mail in an envelope addressed to Attn.: Certificate of Correction Branch of the Patent Issue Division, Commissioner for Patents, P.O. Box 1450, Alexandria, VA 22313-1450, on October 18, 2005.

Olga Kadish

Olga Kadish

OCT 25 2005

OIPE IAP88
OCT 2 0 2005
PATENT & TRADEMARK OFFICE

IN THE UNITED STATES PATENT AND TRADEMARK OFFICE

Applicant: Gealow *et al.*
Serial No.: 10/159,177
Patent No.: 6,950,672
Issued: September 27, 2005
For: CLOCK ENABLE SYSTEM
Docket No.: AD-220J

Attn.: Certificate of Corrections Branch
Branch of the Patent Issue Division
Commissioner for Patents
P.O. Box 1450
Alexandria, VA 22313-1450

CERTIFICATE OF MAILING

I hereby certify that this correspondence is being deposited with the U.S. Postal Service with sufficient postage as first class mail in an envelope addressed to Attn.: Certificate of Corrections Branch, Commissioner for Patents, P.O. Box 1450, Alexandria, VA 22313-1450, on October 18, 2005.

Olga Kadish

Olga Kadish

REQUEST FOR CERTIFICATE OF CORRECTION

1. Attached hereto in duplicate is Form PTO/SB/44 with at least one (1) copy being suitable for printing.

2. The errors occurred in the figures of issued patent, namely, Fig. 1 and Fig. 2.

3. On October 22, 2003, the applicant submitted proposed drawing changes as part of a response. The response with the proposed drawing changes were received by the U.S. Patent and Trademark Office on October 24, 2003. A copy of the Replacement Sheets that were submitted are attached hereto.

4. In the Supplemental Notice of Allowance mailed June 9, 2005, the Examiner accepted the drawings filed on October 24, 2003. A copy of the Supplemental Notice of Allowance is attached hereto.

5. Figures 1 and 2 as they appear in the issued patent are not in accord with the accepted drawings of October 24, 2003.

6. The applicants request correction.

7. The mistakes are of a clerical or typographical nature that were made by the Patent Office.

8. Please send the Certificate of Correction to:

Thomas E. Thompkins, Jr.
Iandiorio & Teska
260 Bear Hill Road
Waltham, MA 02451-1018

9. If for any reason this Request is found to be incomplete, or if at any time it appears that a telephone conference with counsel would help advance prosecution, please telephone the undersigned or his associates, collect in Waltham, Massachusetts at (781) 890-5678.

Respectfully submitted,

T. Thomp

Thomas E. Thompkins, Jr.
Reg. No. 47,136

OCT 2 5 2005

PTO/SB/44 (04-04)
Approved for use through 04/30/2007. OMB 0651-0033
U.S. Patent and Trademark Office; U.S. DEPARTMENT OF COMMERCE
Under the Paperwork Reduction Act of '995, no persons are required to respond to a collection of information unless it displays a valid OMB control
(Also Form PTO-1050)

UNITED STATES PATENT AND TRADEMARK OFFICE
CERTIFICATE OF CORRECTION

PATENT NO : 6,950,672

DATED : September 27, 2005

INVENTOR(S) : Gealow *et al.*

It is certified that error appears in the above-identified patent and that said Letters Patent is hereby corrected as shown below:

Figs. 1 and 2 should appear as per the Replacements Sheets received by the U.S. Patent and Trademark Office on October 24, 2003.

MAILING ADDRESS OF SENDER:

Thomas E. Thompkins, Jr.
Iandiorio & Teska
260 Bear Hill Road
Waltham, MA 02451-1018

PATENT NO. 6,950,672

No. of additional copies

→ 1

This collection of information is required by 37 CFR 1.322, 1.323, and 1.324. The Information is required to obtain or retain a benefit by the public which is to file (and by the USPTO to process) an application. Confidentiality is governed by 35 U.S.C. 122 and 37 CFR 1.14. This collection is estimated to take 1.0 hour to complete, including gathering, preparing, and submitting the completed application form to the USPTO. Time will vary depending upon the individual case. Any comments on the amount of time you require to complete this form and/or suggestions for reducing the burden, should be sent to the Chief Information Officer, U.S. Patent and Trademark Office, U.S. Department of Commerce, P.O. Box 1450, Alexandria, VA 22313-1450. DO NOT SEND FEES OR COMPLETED FORMS TO THIS ADDRESS. **SEND TO: Attention Certificate of Corrections Branch, Commissioner for Patents, P.O. Box 1450, Alexandria, VA 22313-1450.**

If you need assistance in completing the form, call 1-800-PTO-9199 and select option 2.

OCT 25 2006

Thomas Thompkins
781-890-5678

AMENDMENTS TO THE DRAWINGS/FIGURES

The attached sheets of drawings include changes to Figs. 1 and 2. Sheets 1 and 2 which include Figs. 1 and 2, replace original sheets 1 and 2. Annotated sheets showing the changes are also attached.

Attachments: Replacement Sheets 1 and 2 and Annotated Sheets 1 and 2 showing changes.

AD-220J
TET:ok

O.I.P.E. JC40
OCT 24 2003
PATENT & TRADEMARK OFFICE

Examiner,
C.C.
1/5/04

10/159,177

ANNOTATED SHEET SHOWING CHANGES

1/11/2006, called attorney, that Fig 1,2 are incorrect, on patent. 6,950,672. C.C.

Fig 1,2 needs to be corrected. C.C.

1/2

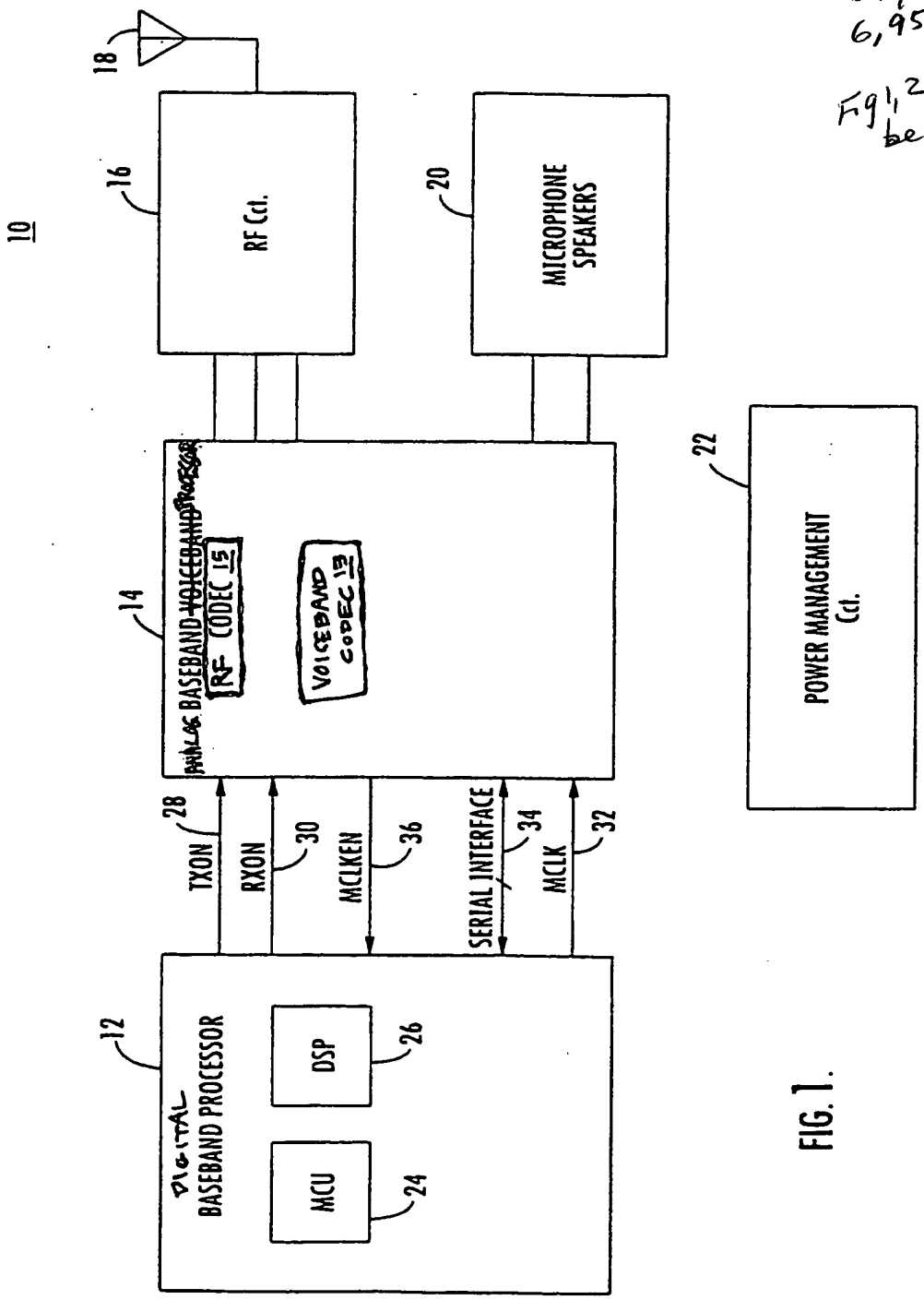

FIG. 1.

O I P E JC90
OCT 24 2003
PATENT & TRADEMARK OFFICE

ANNOTATED SHEET SHOWING CHANGES

C.C. 11/5/04

2/2

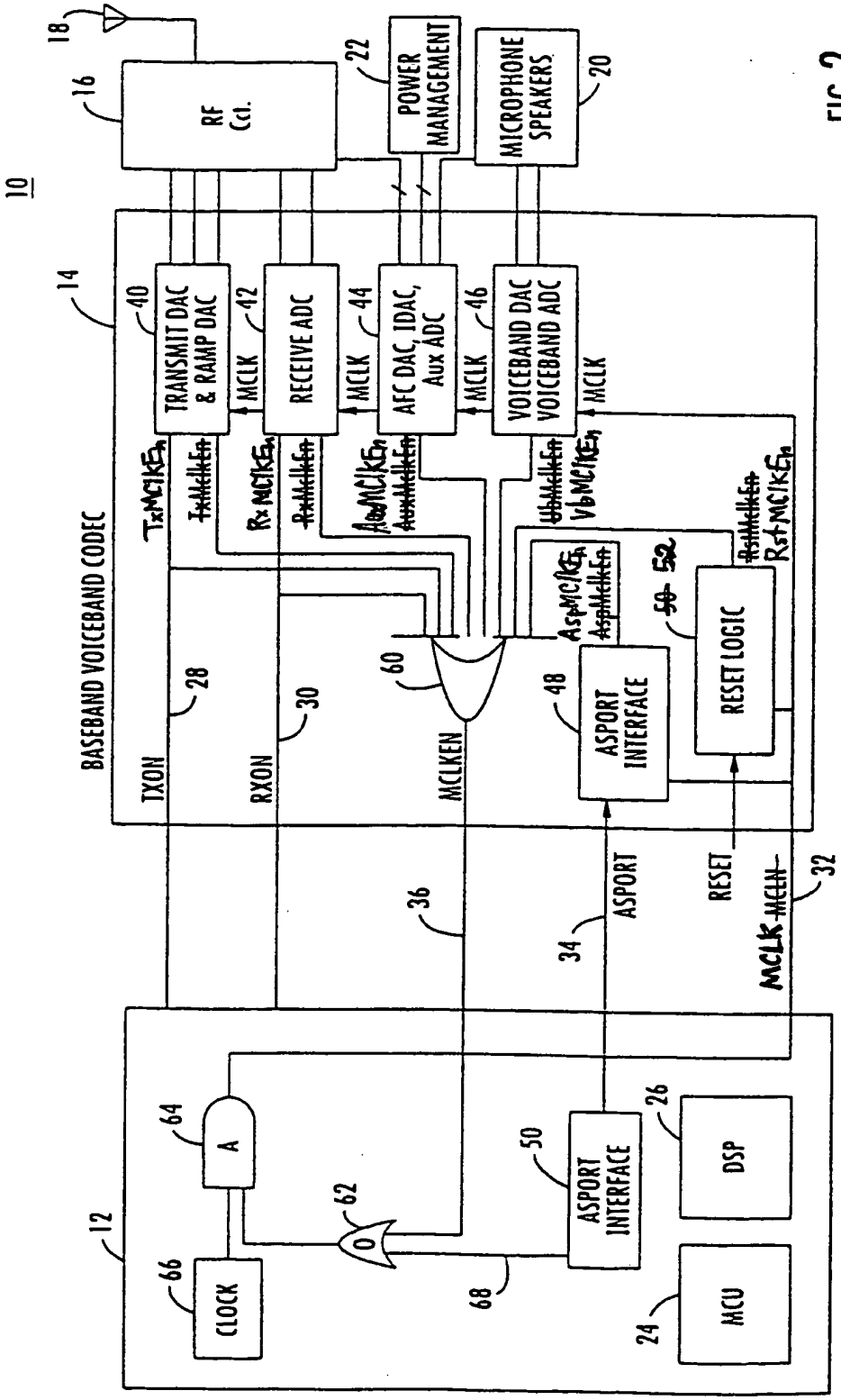

FIG. 2

OIPE JC40
OCT 24 2003
PATENT & TRADEMARK OFFICE

REPLACEMENT SHEET

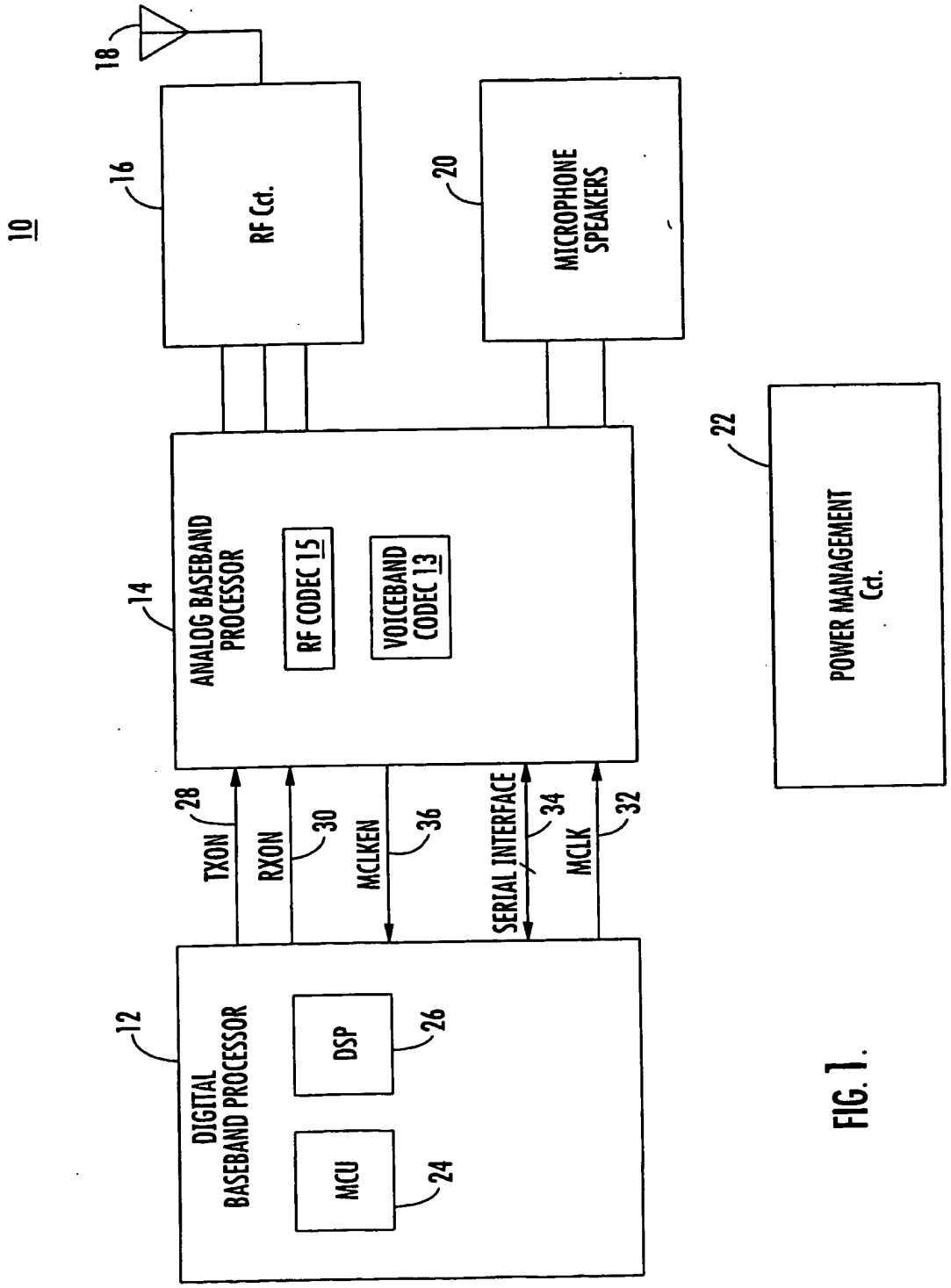

FIG. 1.

O I P E JC40
OCT 2 4 2003
PATENT & TRADEMARK OFFICE

REPLACEMENT SHEET

2/2

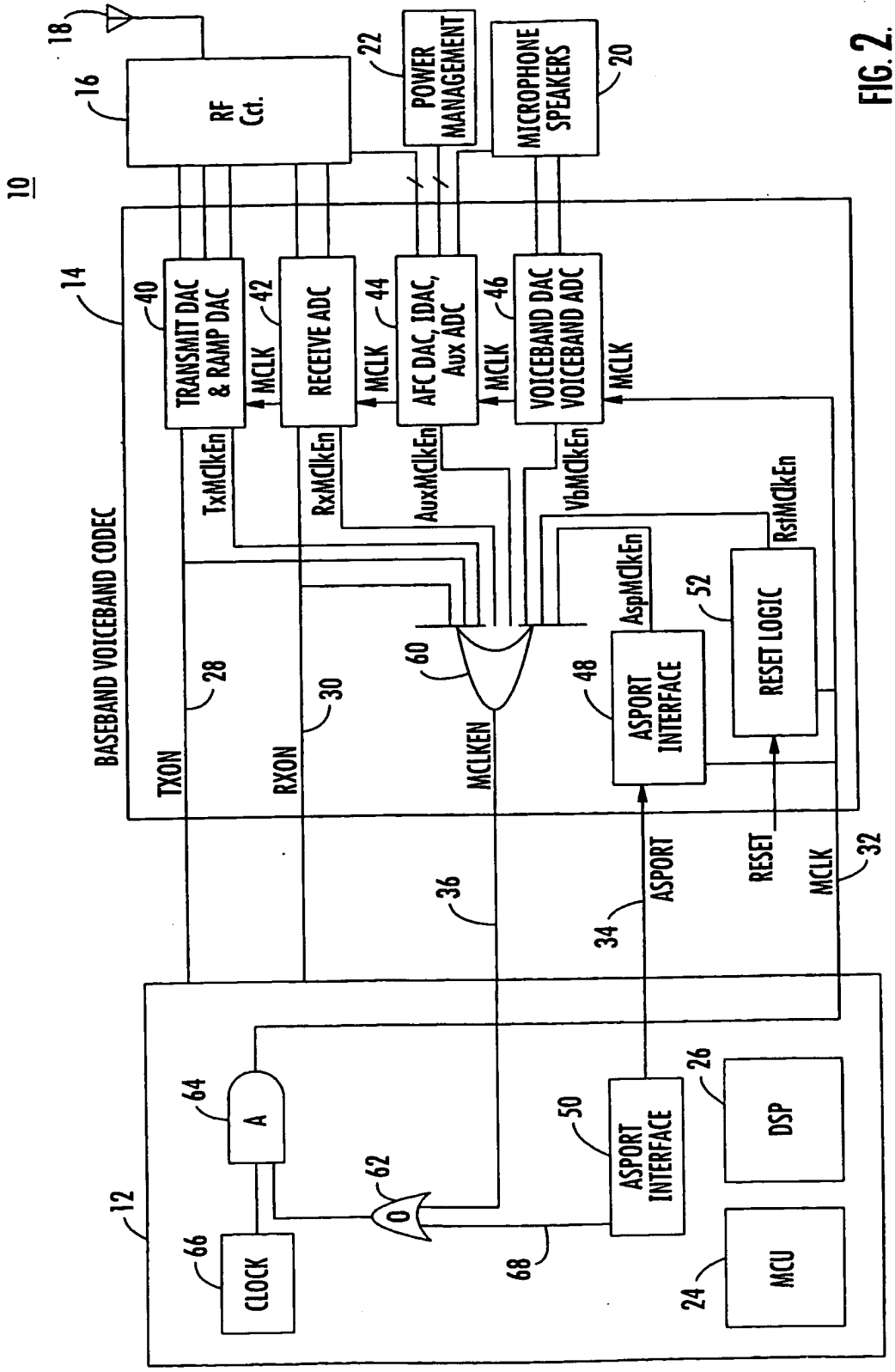

FIG. 2.

US006950672B2

(12) **United States Patent**
Gealow et al.

(10) **Patent No.: US 6,950,672 B2**
(45) **Date of Patent: Sep. 27, 2005**

(54) **CLOCK ENABLE SYSTEM**

(75) Inventors: **Jeffrey C. Gealow**, Andover, MA (US); **Thomas J. Barber, Jr.**, Medford, MA (US); **Palle Birk**, Gistrup (DK); **Joern Soerensen**, Aars (DK)

(73) Assignee: **Analog Devices, Inc.**, Norwood, MA (US)

(*) Notice: Subject to any disclaimer, the term of this patent is extended or adjusted under 35 U.S.C. 154(b) by 86 days.

(21) Appl. No.: **10/159,177**

(22) Filed: **May 30, 2002**

(65) **Prior Publication Data**

US 2003/0224745 A1 Dec. 4, 2003

(51) **Int. Cl.**[7] **H04B 1/38**

(52) **U.S. Cl.** **455/550.1**; 455/574; 327/291; 327/144

(58) **Field of Search** 455/181.1, 574, 455/343.4, 575.1, 183.2, 550.1, 407, 260, 334, 95, 127.1, 231, 556.1, 333, 265, 255, 343.1, 424, 425, 561, 456.5, 456.6; 713/500, 322, 300, 320, 324, 600, 501, 321; 375/316, 376, 219, 214; 327/99, 544, 398, 165, 211, 291, 295, 112, 415, 108, 213, 141, 144, 176, 233, 298; 326/93, 82, 83, 85, 21–28, 86, 87, 95

(56) **References Cited**

U.S. PATENT DOCUMENTS

5,058,203	A	* 10/1991	Inagami	455/89
5,485,127	A	* 1/1996	Bertoluzzi et al.	331/69
5,675,808	A	10/1997	Gulick et al.	
5,677,849	A	* 10/1997	Smith	713/300
5,950,120	A	* 9/1999	Gardner et al.	455/343
6,125,451	A	* 9/2000	Fukunaga	713/500
6,442,407	B1	* 8/2002	Bauer et al.	455/574
6,564,329	B1	* 5/2003	Cheung et al.	731/322
2003/0014682	A1	* 1/2003	Schmidt	713/500

* cited by examiner

Primary Examiner—Edward F. Urban
Assistant Examiner—Charles Chow
(74) *Attorney, Agent, or Firm*—Iandiorio & Teska

(57) **ABSTRACT**

A clock enable system for a multichip device includes a first integrated circuit including a clock signal and at least a second integrated circuit including at least one functional block periodically requiring clock signals from the first integrated circuit; a clock required circuit responsive to each functional block for providing a clock required signal in response to activation of any one or more of the functional blocks; and a clock enable circuit responsive to the clock required signal for enabling the first integrated circuit to provide clock signals to the functional blocks on the second integrated circuit.

7 Claims, 2 Drawing Sheets

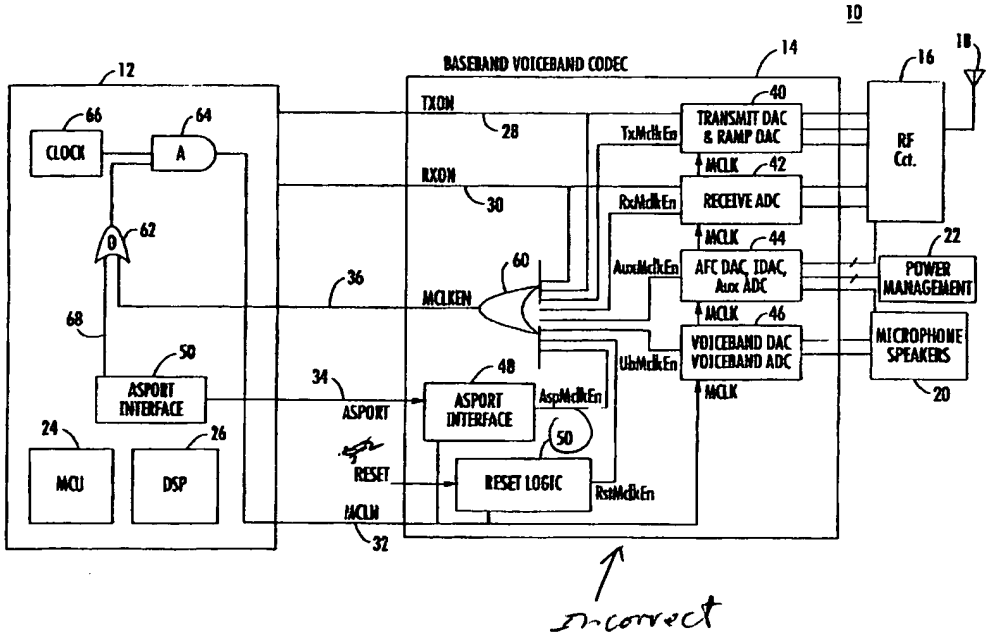

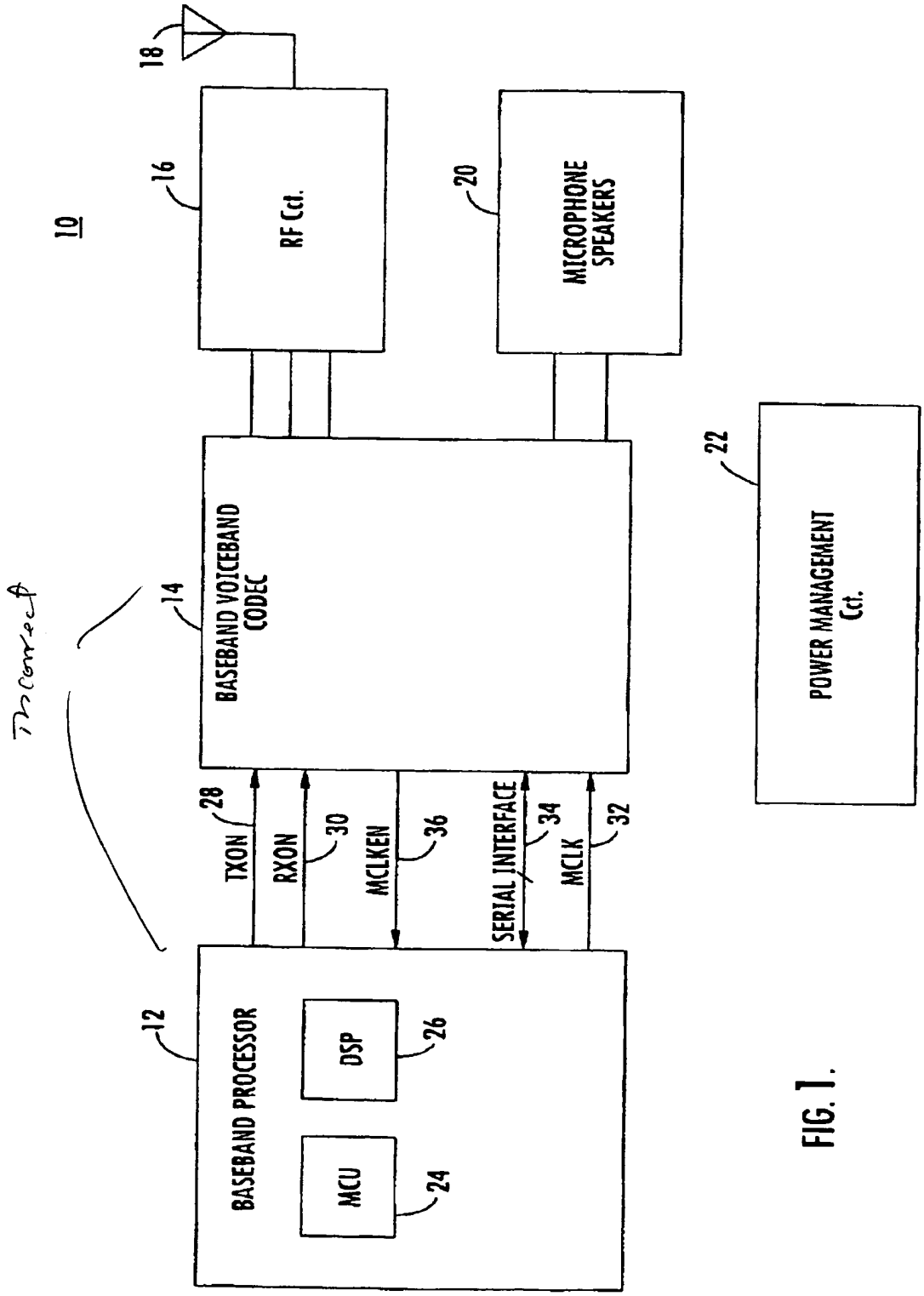
10
18
16
RF Cct.
20
MICROPHONE SPEAKERS
22
POWER MANAGEMENT Cct.
14
BASEBAND VOICEBAND CODEC
28
TXON
30
RXON
36
MCLKEN
34
SERIAL INTERFACE
32
MCLK
12
BASEBAND PROCESSOR
DSP
26
MCU
24

FIG. 1.

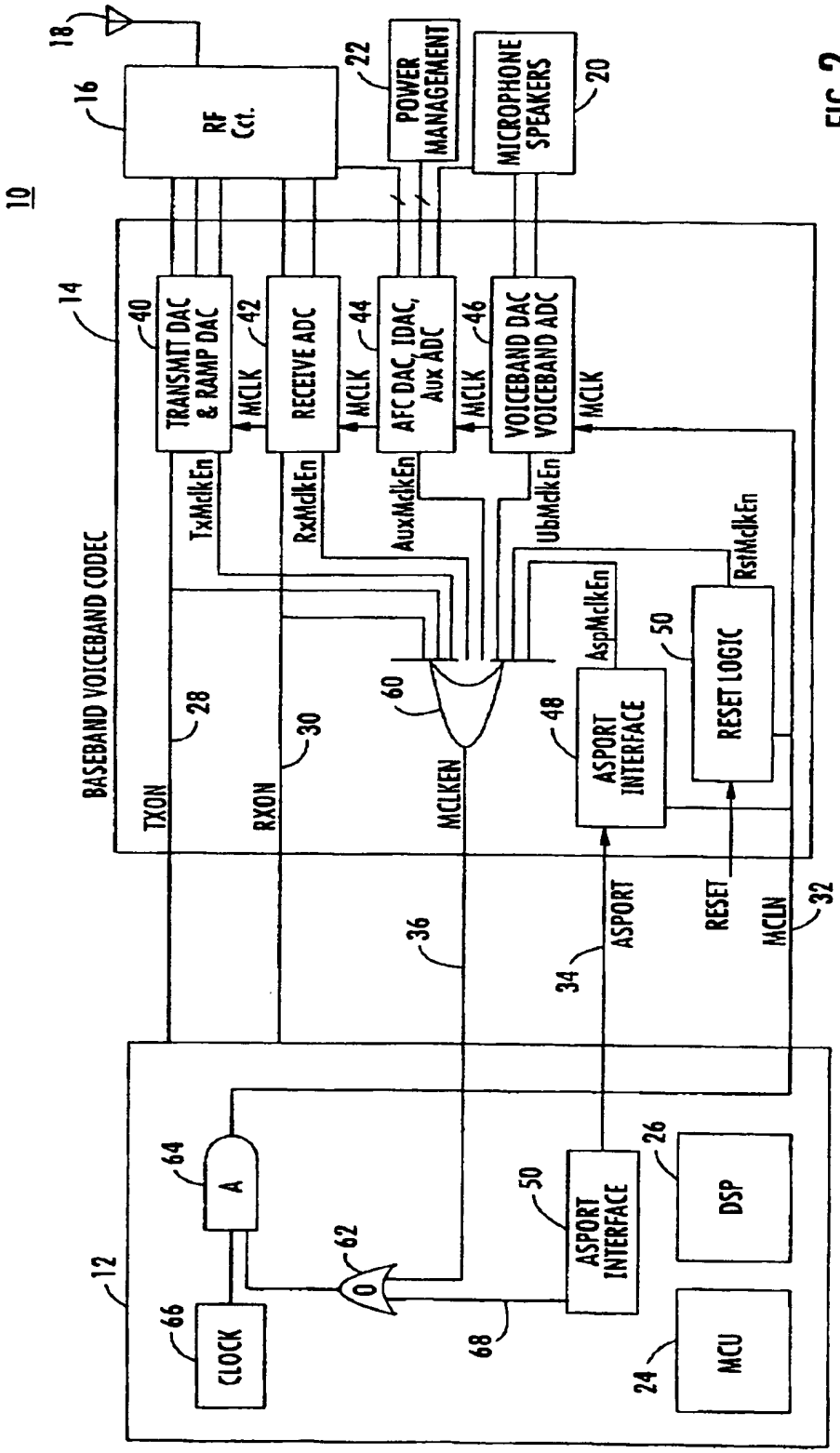
10
18
16
RF Cct.
22
POWER MANAGEMENT
MICROPHONE SPEAKERS
20
14
BASEBAND VOICEBAND CODEC
40
TRANSMIT DAC & RAMP DAC
42
RECEIVE ADC
44
AFC DAC, IDAC, Aux ADC
46
VOICEBAND DAC VOICEBAND ADC
MCLK
TxMclkEn
RxMclkEn
AuxMclkEn
UbMclkEn
RstMclkEn
AspMclkEn
50
RESET LOGIC
48
ASPORT INTERFACE
60
28
30
TXON
RXON
MCLKEN
36
34
ASPORT
RESET
MCLN
32
12
64
A
62
O
66
CLOCK
68
50
ASPORT INTERFACE
26
DSP
24
MCU

FIG. 2.

UNITED STATES PATENT AND TRADEMARK OFFICE

Commissioner for Patents
United States Patent and Trademark Office
P.O. Box 1450
Alexandria, VA 22313-1450
www.uspto.gov

William J. Sapone
714 Colorado Avenue
Bridgeport, CT 06605

COPY MAILED

FEB 07 2005

OFFICE OF PETITIONS

In re Application of	:	
Roberto Valducci	:	
Application No. 10/159,184	:	ON PETITION
Filed: May 31, 2002	:	
Attorney Docket No. 242/9-1693	:	

This is a decision on the petition under 37 CFR 1.137(b), filed by facsimile transmission on December 12, 2004, to revive the above-identified application.

The above-identified application became abandoned as a result of petitioner's failure to file an appeal brief (and fee required by 37 CFR 1.17(c)) within the time period provided in 37 CFR 1.192(a). As an appeal brief (and appeal brief fee) was not filed within two (2) months of the Notice of Appeal filed October 4, 2004, and no extensions of time under the provisions of 37 CFR 1.136(a) were obtained, the appeal was dismissed and the proceedings as to the rejected claims were terminated. See 37 CFR 1.192(b) & 1.197(c). As no claim was allowed, the-above-identified application became abandoned after midnight December 4, 2004. See MPEP 1215.04.

In response, petitioner submitted with the instant petition an authorization to charge, the listed deposit account, $750 for the petition to revive fee, $395 for the filing of a Request for Continued Examination (RCE) under 37 CFR 1.114, and an amendment. As authorized, the above fees have been charged to petitioner's deposit account.

The petition is **GRANTED**.

The application file is being forwarded to Technology Center Art Unit 1616, for processing the Request for Continued Examination under 37 CFR 1.114, and for review of the amendment filed with the instant petition.

Telephone inquiries concerning this decision should be directed to the undersigned at (571) 272-3226.

Andrea Smith
Petitions Examiner
Office of Petitions
Office of the Deputy Commissioner
for Patent Examination Policy

UNITED STATES PATENT AND TRADEMARK OFFICE

SEP 10 2004

Commissioner for Patents
United States Patent and Trademark Office
P.O. Box 1450
Alexandria, VA 22313-1450
www.uspto.gov

Paper No. 15

In re Application of
Gunther Siegel
Application No. 10/159,198
Filed: May 30, 2002
For: Apparatus for Writing in Metal

: DECISION ON PETITION

This is a decision on the petition filed on June 21, 2004 by which petitioner requests supervisory review of the restriction requirement promulgated on November 18, 2003 and made final on March 17, 2004 The petition is being considered pursuant to 37 CFR 1.144 and 37 CFR 1.181, and no fee is required. Petitioner may request a refund of the $130.00 tendered with the petition, and should attach a copy of this decision to the request.

The petition is dismissed.

The record shows that this application was filed with claims 1-20. Claims 21-45 were added by amendment to provoke an interference. The record further shows that the examiner held that claims 1-20 and claims 21-45 were directed to patentably distinct inventions, with claims 1-20 being directed to a machine for writing symbols and claims 21-45 being directed to a marking device for use with a CNC machine. The examiner's rationale for the restriction was that the machine claims did not require the particulars of the marking device and that the marking device had separate utility apart from the machine.

Petitioner argues that claims 1-17 and directed to a marking device, and that this is the same invention to which claims 21-45 are directed. Petitioner appears to base this position on the fact that the combination (machine) claims include the marking device. Petitioner therefore argues that the application discloses only one embodiment, that the claims are directed to a single embodiment, and that restriction is improper because the same essential characteristics of a single disclosed embodiment should not be subject to restriction, citing MPEP § 806.03.

It appears to the undersigned that originally filed claims 1-16 are clearly directed to a machine which includes, in combination a writing device (the "device for impacting a workpiece"), apparatus for mounting a workpiece so that the writing device can write on the workpiece, and an element for moving either the writing device or the mounting apparatus (the "equipment" recited in claim 1). Claims 11-17 are directed solely to the marking device, and not to a machine, and original claims 18-20 are directed to a method for writing symbols on a hard surface. The record shows that the examiner promulgated an Office action treating claims 1-20 on their merits, without requiring restriction therebetween, so it would appear that the examiner in fact held that claims 1-20 as originally filed were directed to the same patentable invention.

However, claims 11-17 are substantially broader than claims 21-45. Following the format of MPEP § 806.05(c) with respect to combination-subcombination practice, claims 1-10 can be described as the combination (machine) AB_{br} while claims 11-17 can be described as the subcombination (writing device) B_{br}. On the other hand, claims 21-45 are directed to the subcombination (writing device) B_{sp}. That is, the definition of the subcombination in claims 21-45 is clearly much more limited than that contained in combination claims 1-10. As set forth in MPEP § 806.05(c), restriction between claims directed to the combination AB_{br} claims directed to the subcombination B_{sp} is perfectly proper procedure. While the examiner should have grouped claims 11-17 with the other subcombination claims 21-45, and indicated that they were considered to link combination claims 1-16 to the subcombination claims (so that if claims 11-17 appeared to be allowable, claims 21-45 would then be examined), his failure to do so is harmless because claims 11-17 have not been indicated as being allowable. Therefore, the failure to designate claims 117-17 as subcombination claims that link combination claims 1-10 and subcombination claims 21-45 is harmless error. This

error does not negate the validity of the examiner's holding that claims 21-45 are properly restricted from claims 1-10 because claims 1-10 are directed to a machine having a writing device as one broadly recited component thereof, while claims 21-45 are directed only to the writing device *per se*, claims 21-45 provide a much more restricted definition of the writing device than is provided by claims 1-10, and claims 11-17 are not presently allowable.

There being no arbitrary or capricious action on the part of the examiner, and no harmful error, there is no basis for granting the requested relief.

Petitioner is entitled to file a request for reconsideration, without fee. Any request for reconsideration must be filed within two months of the date of this decision, and when the application is still pending. The period for filing a reply to the outstanding Office action dated March 17, 2004 continues to run as set therein, and is not tolled by the filing of the instant petition. See 37 CFR 1.181(f).

The application is being returned to storage in the Technology Center 3700 Central Files pending further action by petitioner.

PETITION DISMISSED.

E. Rollins-Cross, Director
Technology Center 3700

Joseph B. Taphorn
Hagan Farms
8 Scenic Drive
Poughkeepsie, NY 12603-5521

UNITED STATES PATENT AND TRADEMARK OFFICE

Commissioner for Patents
United States Patent and Trademark Office
P.O. Box 1450
Alexandria, VA 22313-1450
www.uspto.gov

Joseph B. TAPHORN
HAGAN Farms
8 Scenic Drive
Poughkeepsie, NY 12603-5521

COPY MAILED

FEB 25 2008

OFFICE OF PETITIONS

In re Application of
Gunther Siegel
Application No. 10/159,198
Filed: May 30, 2002
Attorney Docket No. N/A

DECISION ON PETITION

This is a decision on the communication filed on December 29, 2006, which is being treated as a petition requesting reconsideration of the withdrawal of the holding of abandonment in the above-identified application[1].

The above application was held abandoned for failure to timely respond to the non-final Office action mailed March 17, 2004. A Notice of Abandonment was mailed on July 11, 2005.

The petition is **DISMISSED**.

In the present petition, petitioner argues again that the Notice of Abandonment be withdrawn based on his belief that an amendment was timely filed with the petition on June 21, 2004. To support his belief, petitioner submitted a copy of a Certificate of Mailing dated **July 14, 2004**.

Petitioner's argument is not well taken. The evidence submitted shows a Certificate of Mailing dated July 14, 2004. However, petitioner is under the belief that an amendment was timely filed on June 21, 2004. The evidence fails to contain an itemization of the item(s) filed and further fails to contain the correct Certificate of Mailing date to substantiate petitioner's assertion.

A review of the record discloses that on June 21, 2004, petitioner did **not** timely file a response, but filed a petition to set aside the restriction requirement made in the Office action mailed March 17, 2004. Office records further show that the decision mailed on September 10, 2004, which

[1] The present petition is considered untimely as it was not filed within two months from the decision mailed on September 17, 2004.

was within the six month extendable period, informed petitioner that the period for filing a reply to the Office action dated March 17, 2004 continued to run as set in the notice and that the filing of the petition filed on June 21, 2004, did not toll the period for filing a timely response. After receiving the decision dated September 10, 2004, it was petitioner's responsibility to file a three months extension time along with the proper reply that would have continued the prosecution of the above application on or before September 17, 2004. Since no response and no extension of time were received, the application was held abandoned after midnight June 17, 2004.

It is noted that petitioner was aware that a response to the Office action of March 17, 2004 was outstanding and that a request for reconsideration should have been filed within two months from the decision dated September 17, 2004. Instead of timely filing a request for reconsideration and supplying the Office with a copy of the amendment supposedly filed on June 21, 2004, petitioner took no action until April 22, 2005, which was after the application became abandoned.

The Office acknowledges receipt of an amendment filed on April 22, 2005 and July 18, 2005. Unfortunately, those amendments are deemed untimely as they were received after the six months statutory period for reply and were not accompanied by a petition to revive under 37 CFR 1.137(a) or (b).

In view of the above, the application was properly held abandoned and will remain abandoned until petitioner takes some other action in the above application.

It is strongly recommended that petitioner file a petition to revive under 37 CFR 1.137(b) and pay the petition fee of $770. The filing of a petition under 37 CFR 1.137(b) cannot be intentionally delayed and therefore must be filed promptly. A person seeking revival due to unintentional delay cannot make a statement that the delay was unintentional unless the entire delay, including the date it was discovered that the application was abandoned until the filing of the petition to revive under 37 CFR 1.137(b), was unintentional. A statement that the delay was unintentional is not appropriate if petitioner intentionally delayed the filing of a petition for revival under 37 CFR 1.137(b).

Petitioner is cautioned that there is an inordinate delay in the abandonment of the present application. Accordingly, where there is a question as to whether either the abandonment or the delay in filing a petition under 37 CFR 1.137 was unintentional, the Director may require additional information. *See* MPEP 711.03(c)(II)(C) and (D).

Any request for reconsideration of this decision must be submitted within **TWO (2) MONTHS** from the mail date of this decision. Extensions of time under 37 CFR 1.136(a) are permitted. The reconsideration request should include a cover letter entitled "Renewed Petition under 37 CFR 1.137(b)." This is **not** a final agency action within the meaning of 5 U.S.C. § 704.

Further correspondence with respect to this matter should be addressed as follows:

By Mail: Mail Stop PETITION
Commissioner for Patents
P. O. Box 1450
Alexandria, VA 22313-1450

By hand: U. S. Patent and Trademark Office
Customer Service Window, Mail Stop Petitions
Randolph Building
401 Dulany Street
Alexandria, VA 22314

The centralized facsimile number is **(571) 273-8300.**

Telephone inquiries concerning this decision should be directed to the undersigned at (571) 272-3226.

Andrea Smith
Petitions Examiner
Office of Petitions

UNITED STATES PATENT AND TRADEMARK OFFICE

Commissioner for Patents
United States Patent and Trademark Office
P.O. Box 1450
Alexandria, VA 22313-1450
www.uspto.gov

Joseph B. TAPHORN
HAGAN Farms
8 Scenic Drive
Poughkeepsie, NY 12603-5521

COPY MAILED

OCT 21 2008

OFFICE OF PETITIONS

In re Application of	:	
Gunther Siegel	:	
Application No. 10/159,198	:	DECISION ON PETITION
Filed: May 30, 2002	:	
Attorney Docket No. N/A	:	

This is a decision on the petition under 37 CFR 1.137(b), filed March 14, 2008, to revive the above-identified application.

The above-identified application has been abandoned for an extended period of time. The Patent and Trademark Office is relying on petitioner's duty of candor and good faith and accepting the statement that the entire delay in filing the required reply from the due date for the reply until the filing of a grantable petition pursuant to 37 CFR 1.137(b) was unintentional. See Changes to Patent Practice and Procedure, 62 Fed. Reg. at 53160 and 53178; 1203 Off. Gaz. Pat. Office at 88 and 103 (responses to comments 64 and 109) (applicant obligated under 37 CFR 10.18 to inquire into the underlying facts and circumstances when providing the statement required by 37 CFR 1.137(b) to the Patent and Trademark Office).

The petition satisfies the requirements of 37 CFR 1.137(b) in that petitioner has supplied (1) the reply in the form of an amendment; (2) the petition fee of $770; and (3) a proper statement of unintentional delay. Therefore, the petition is **GRANTED**.

This application file is being referred to Technology Center Art Unit 3725 for further processing in accordance with this decision.

Telephone inquiries concerning this decision should be directed to the undersigned at (571) 272-3226.

Andrea Smith
Petitions Examiner
Office of Petitions

SPE RESPONSE FOR CERTIFICATE OF CORRECTION

Paper No.:3

DATE : June 1, 2005

TO SPE OF : ART UNIT 1615

SUBJECT : Request for Certificate of Correction on Patent No.: 6,797,277

A response is requested with respect to the accompanying request for a certificate of correction.

Please complete this form and return with file, within **7** days to:
Certificates of Correction Branch - PK 3-910
Palm location **7590** - Tel. No. 305-8201

With respect to the change(s) requested, correcting Office and/or Applicant's errors, should the patent read as shown in the certificate of correction? No new matter should be introduced, nor should the scope or meaning of the claims be changed.

Thank You For Your Assistance **Certificates of Correction Branch**

The request for issuing the above-identified correction(s) is hereby:
Note your decision on the appropriate box.

☒ **Approved** **All** changes apply.

☐ **Approved in Part** Specify below which changes **do not** apply.

☐ **Denied** State the reasons for denial below.

Comments:

THURMAN K. PAGE
SUPERVISORY PATENT EXAMINER
TECHNOLOGY CENTER 1600

NEIL S. LEVY
PRIMARY EXAMINER

SPE: THURMAN PAGE **Art Unit** 1615

NOTICE RE: CERTIFICATES OF CORRECTION

DATE : 3/3/05 **Paper No.:** _____

TO : **Supervisor, Art Unit** 1616

SUBJECT : Certificate of Correction Request in Patent No.: 6,797,277

A response to the following question is requested with respect to the accompanying request for a certificate of correction.

With respect to the change(s) requested, correcting Office and/or Applicant's errors, should the patent read as shown in the certificate of correction? No new matter should be introduced, nor should the scope or meaning of the claims be changed.

PLEASE COMPLETE THIS FORM AND RETURN WITH FILE, WITHIN 7 DAYS, TO CERTIFICATES OF CORRECTION BRANCH - PK 3-915/922 PALM LOCATION 7580 - TEL. N0. 305-8309

THANK YOU FOR YOUR ASSISTANCE!

Note your decision by placing a check mark in the appropriate box below, indicating whether all changes requested in the Request for Certificate of Correction should be applied. Please specify which changes should not be applied and indicate the reason(s) for denial, in the "Comments" section below.

☒ YES ☐ NO

☐ Comments: _____

THURMAN K. PAGE
SUPERVISORY PATENT EXAMINER
TECHNOLOGY CENTER 1600

Supervisor Art Unit

UNITED STATES PATENT AND TRADEMARK OFFICE

COMMISSIONER FOR PATENTS
UNITED STATES PATENT AND TRADEMARK OFFICE
P.O. BOX 1450
ALEXANDRIA, VA 22313-1450
www.uspto.gov
DIW Sep-06

SONNENSCHEIN NATH & ROSENTHAL
WACKER DRIVE STATION - SEARS TOWER
P.O. BOX #061080
CHICAGO IL 60606-6404

COPY MAILED
SEP 25 2006
OFFICE OF PETITIONS

In re Patent No. 6,815,067	:	
Issued: 30 May, 2002	:	
Application No. 10/159,239	:	ON PETITION
Filed: 21 June, 2000	:	
Atty Dckt No. 09793822-0162	:	

This is a decision on the petition filed on 11 April, 2006, which is being treated as a request under 37 CFR 3.81(b)[1] to correct the assignee on the front page of the above-identified patent by way of a Certificate of Correction.

The petition is **granted**.

Telephone inquires concerning this matter may be directed to the undersigned at 571.272.3231. Any questions concerning the issuance of the Certificate of Correction should be directed to the Certificates of Correction Branch at 703.305.8309.

The file is being referred to the Certificates of Correction Branch for issuance of the requested Certificate of Correction.

D Wood
Douglas I. Wood
Senior Petitions Attorney
Office of Petitions

[1] See Official Gazette of 22 June, 2004.

UNITED STATES PATENT AND TRADEMARK OFFICE

Commissioner for Patents
United States Patent and Trademark Office
P.O. Box 1450
Alexandria, VA 22313-1450
www.uspto.gov

PLANTRONICS, INC.
IP DEPARTMENT/LEGAL
345 ENCINAL STREET
P.O. BOX 635
SANTA CRUZ CA 95060-0635

COPY MAILED

APR 1 0 2008

OFFICE OF PETITIONS

In re Application of	:	
Iain McNeill et al	:	
Application No. 10/159,240	:	DECISION ON PETITION
Filed: May 30, 2002	:	
Attorney Docket No. 01-7020	:	

This is a decision on the petition under the unintentional provisions of 37 CFR 1.137(b), filed August 9, 2007, to revive the above-identified application.

The petition is **GRANTED**.

The application became abandoned for failure to reply in a timely manner to the Final Rejection mailed May 31, 2006.

The petition satisfies the requirements of 37 CFR 1.137(b) in that petitioner has supplied (1) the reply in the form of an RCE and an amendment, (2) the petition fee of $1,500, and (3) an adequate statement of unintentional delay.

Telephone inquiries concerning this decision should be directed to the undersigned at (571) 272-3208.

This application is being referred to Technology Center AU 2626 for appropriate action by the Examiner in the normal course of business on the reply received August 9, 2007.

Karen Creasy

Karen Creasy
Petitions Examiner
Office of Petitions

UNITED STATES PATENT AND TRADEMARK OFFICE

COMMISSIONER FOR PATENTS
UNITED STATES PATENT AND TRADEMARK OFFICE
WASHINGTON, D.C. 20231
www.uspto.gov

Paper No. 4

QUINE INTELLECTUAL PROPERTY LAW GROUP, P.C.
P.O. BOX 458
ALAMEDA, CA 94501

COPY MAILED

APR 2 2 2003

OFFICE OF PETITIONS

In re Application of :
Shen, et al. :
Application No. 10/159,257 :
Filed: May 31, 2002 :
Attorney Docket No. 407T-896020US :

ON PETITION

This is a decision on the petition under 37 C.F.R. § 1.137(b), filed March 20, 2003, to revive the above-identified application.

The petition is **dismissed**.

Any request for reconsideration of this decision must be submitted within TWO (2) MONTHS from the mail date of this decision. Extensions of time under 37 CFR 1.136(a) are permitted. The reconsideration request should include a cover letter entitled "Renewed Petition under 37 CFR 1.137(b)."

The above-identified application became abandoned for failure to reply in a timely manner to the Notice to File Missing Parts of Application (Notice) mailed July 22, 2002. The Notice set a period for reply of two (2) months from the mail date of the Notice. No extensions of time under the provisions of 37 CFR 1.136(a) were obtained. Accordingly, the above-identified application became abandoned on September 23, 2002.

Effective December 1, 1997, the provisions of 37 CFR 1.137(b) now provide that where the delay in reply was unintentional, a petition may be filed to revive an abandoned application or a lapsed patent pursuant to 37 CFR 1.137(b). A grantable petition pursuant to 37 CFR 1.137(b) must be accompanied by:

(1) the required reply, unless previously filed. In a nonprovisional application abandoned for failure to prosecute,

the required reply may be met by the filing of a continuing application. In an application or patent, abandoned or lapsed for failure to pay the issue fee or any portion thereof, the required reply must be the payment of the issue fee or any outstanding balance thereof.

(2) the petition fee as set forth in 37 CFR 1.17(m);

(3) a statement that the **entire** delay in filing the required reply from the due date for the reply until the filing of a grantable petition pursuant to 37 CFR 1.137(b) was unintentional. The Commissioner may require additional information where there is a question whether the delay was unintentional; and

(4) any terminal disclaimer (and fee set forth in 37 CFR 1.20(d)) required pursuant to 37 CFR 1.137(d).

The instant petition does not satisfy requirement (1) above.

An executed declaration has not been submitted. Accordingly, the petition must be dismissed.

Further correspondence with respect to this matter should be addressed as follows:

By mail: Mail Stop Petition
Commissioner for Patents
P.O. Box 1450
Alexandria, VA 22313-1450

By FAX: (703) 308-6916
Attn: Office of Petitions

By hand: Office of Petitions
2201 South Clark Place
Crystal Plaza 4, Suite 3C23
Arlington, VA

Telephone inquiries should be directed to the undersigned at (703) 306-9200.

Edward J. Tannouse
Petitions Attorney
Office of Petitions
United States Patent and Trademark Office

UNITED STATES PATENT AND TRADEMARK OFFICE

COMMISSIONER FOR PATENTS
UNITED STATES PATENT AND TRADEMARK OFFICE
P.O. BOX 1450
ALEXANDRIA, VA 22313-1450
www.uspto.gov

Paper No. 9

QUINE INTELLECTUAL PROPERTY LAW GROUP, P.C.
P.O. BOX 458
ALAMEDA, CA 94501

COPY MAILED

JUL 22 2003

OFFICE OF PETITIONS

In re Application of :
Shen, et al. :
Application No. 10/159,257 :
Filed: May 31, 2002 :
Attorney Docket No. 407T-896020US :

ON PETITION

This is a decision on the renewed petition under 37 CFR 1.137(b), filed July 8, 2003, to revive the above-identified application.

The petition is **GRANTED**.

The above-identified application became abandoned for failure to reply in a timely manner to the Notice to File Missing Parts of Application (Notice) mailed July 22, 2002. The Notice set a period for reply of two (2) months from the mail date of the Notice. No extensions of time under the provisions of 37 CFR 1.136(a) were obtained. Accordingly, the above-identified application became abandoned on September 23, 2002.

The file is being forwarded to the Office of Initial Patent Examination for further processing.

Telephone inquiries concerning this matter may be directed to the undersigned at (703)306-9200.

Edward J. Tannouse
Petitions Attorney
Office of Petitions
United States Patent and Trademark Office

UNITED STATES PATENT AND TRADEMARK OFFICE

COMMISSIONER OF PATENTS

February 24, 2005

Roger S. Thompson
Cohen Pontani Lieberman & Pavane
551 Fifth Avenue
New York, NY 10176

In re Application of:
Mark Pasula et al.
Serial No: 10/159,264 On Petition
Filing Date: May 29, 2002
For: METHOD AND APPARATUS FOR STIMULATING CELLULAR REGENERATION IN A PATIENT

In response to the petitions received by fax on February 23, 2005, to withdraw the holding of abandonment in the above application.

The petition is Granted.

The above-identified application became abandoned for failure to reply with the meaning of 37 C.D.R 1.113 in a timely manner to the Notice to File Missing Parts of Nonprovisional Application mailed July 12, 2002. Which set forth a shortened statutory period for reply of two months. Accordingly, the above-identified application became abandoned September 13, 2002.

The evidence submitted is sufficient to establish that the petitioners responded to the Notice to File Missing Parts of Nonprovisional Application Papers on July 12, 2002 and the Notice to File Corrected Application Papers on February 24, 2003.

The application was abandoned in error. The office regrets any inconvenience this may have caused the client.

Telephone inquiries concerning this application may be directed to Doshie E. Day (703) 308-3640.

Doshie E. Day
Program Management Assistant
Office of Initial Patent Examination

UNITED STATES PATENT AND TRADEMARK OFFICE

COMMISSIONER OF PATENTS

February 24, 2005

Roger S. Thompson
Cohen Pontani Lieberman & Pavane
551 Fifth Avenue
New York, NY 10176

In re Application of:
Mark Pasula et al.
Serial No: 10/159,264 On Petition
Filing Date: May 29, 2002
For: METHOD AND APPARATUS FOR STIMULATING CELLULAR REGENERATION IN A PATIENT

In response to the petitions received by fax on February 23, 2005, to withdraw the holding of abandonment in the above application.

The petition is Granted.

The above-identified application became abandoned for failure to reply with the meaning of 37 C.D.R 1.113 in a timely manner to the Notice to File Missing Parts of Nonprovisional Application mailed July 12, 2002. Which set forth a shortened statutory period for reply of two months. Accordingly, the above-identified application became abandoned September 13, 2002.

The evidence submitted is sufficient to establish that the petitioners responded to the Notice to File Missing Parts of Nonprovisional Application Papers on July 12, 2002 and the Notice to File Corrected Application Papers on February 24, 2003.

The application was abandoned in error. The office regrets any inconvenience this may have caused the client.

Telephone inquiries concerning this application may be directed to Doshie E. Day (703) 308-3640.

Doshie Day

Doshie E. Day
Program Management Assistant
Office of Initial Patent Examination

UNITED STATES PATENT AND TRADEMARK OFFICE

UNITED STATES DEPARTMENT OF COMMERCE
United States Patent and Trademark Office
Address: COMMISSIONER FOR PATENTS
P.O. Box 1450
Alexandria, Virginia 22313-1450
www.uspto.gov

APPLICATION NUMBER	FILING OR 371(c) DATE	FIRST NAMED APPLICANT	ATTY. DOCKET NO./TITLE
10/159,264		Mark Pasula	5263-2

CONFIRMATION NO. 8808

WITHDRAWAL NOTICE

OC000000015256249

COHEN, PONTANI, LIEBERMAN & PAVANE
Suite 1210
551 Fifth Avenue
New York, NY 10176

Date Mailed: 03/03/2005

WITHDRAWAL OF PREVIOUSLY SENT NOTICE

The Notice of Abandonment mailed on 02/02/2004 was sent in error and is hereby withdrawn. A Filing Receipt is enclosed. The Office regrets any inconvenience the error may have caused.

A copy of this notice MUST be returned with the reply.

Customer Service Center
Initial Patent Examination Division (703) 308-1202

PART 3 - OFFICE COPY

UNITED STATES PATENT AND TRADEMARK OFFICE

Commissioner for Patents
United States Patent and Trademark Office
P.O. Box 1450
Alexandria, VA 22313-1450
www.uspto.gov

COPY MAILED

AUG 27 2007

OFFICE OF PETITIONS

COHEN,PONTANI, LIEBERMAN & PAVANE
SUITE 1210
551 FIFTH AVENUE
NEW YORK NY 10176

In re Application of
Mark Pasula et al
Application No. 10/159,264
Filed: May 29, 2002
Attorney Docket No. 5263-2

ON PETITION

This is a decision on the petition filed August 20, 2007, requesting withdrawal of the above-identified application from issue after payment of the issue fee. This application issued into a Patent No. 7,258,658 on August 21, 2007.

The petition is **DISMISSED as moot.**

Unfortunately, the petition did not reach the appropriate official for decision within sufficient time to avert issuance of the application into a patent. Petitioner's attention is directed to 37 CFR 1.313(d), which states:

> A petition under this section will not be effective to withdraw the application from issue unless it is actually received and granted by the appropriate officials **before the date of issue.** Withdrawal of an application from issue after payment of the issue fee may not be effective to avoid publication of application information.

The Request for Continued Examination (RCE) submitted with the petition is not effective and will not be entered since the petition to withdraw from issue is dismissed.

The information disclosure statement (IDS) has been placed in the file of the above-identified application without further consideration. See 37 CFR 1.97(i).

Telephone inquiries should be directed to the undersigned at (571) 272-3208.

Karen Creasy

Karen Creasy
Petitions Examiner
Office of Petitions

UNITED STATES PATENT AND TRADEMARK OFFICE

COMMISSIONER FOR PATENTS
UNITED STATES PATENT AND TRADEMARK OFFICE
P.O. BOX 1450
ALEXANDRIA, VA 22313-1450
www.uspto.gov

NIXON & VANDERHYE, PC
901 NORTH GLEBE ROAD
11TH FLOOR
ARLINGTON, VA 22203

COPY MAILED

OCT 28 2005

OFFICE OF PETITIONS

In re Application of	:	
Jon D. Piganelli et al	:	
Application No. 10/159,280	:	DECISION ON PETITION
Filed: June 3, 2002	:	TO WITHDRAW
Attorney Docket No. 2661-24	:	FROM RECORD
	:	

This is a decision on the Request to Withdraw as attorney or agent of record under 37 C.F.R. § 1.36(b), filed September 14, 2005.

The request is **NOT APPROVED** as being moot.

Office records reflect that Ms. Mary J. Wilson, while acting in a representative capacity under the provisions of 37 CFR 1.34, was never given power of attorney in the above-identified application. As such, Ms. Wilson need not withdraw from representation. Moreover, Ms. Wilson cannot withdraw all the attorneys/agents of record since she was not given power of attorney.

In addition, the request to withdraw fails to provide an address which future correspondence should be mailed. All future communications from the Office will therefore continue to be directed to the above-listed address until otherwise notified by the individuals set forth in 37 CFR 1.33(a)(2).

This matter is being referred to Technology Center AU 1614.

Telephone inquiries concerning this decision should be directed to Wan Laymon at 571-272- 3220.

David Bucci
Petitions Examiner
Office of Petitions

UNITED STATES PATENT AND TRADEMARK OFFICE

Commissioner for Patents
United States Patent and Trademark Office
P.O. Box 1450
Alexandria, VA 22313-1450
www.uspto.gov

WESTERMAN HATTORI DANIELS & ADRIAN
1250 CONNECTICUT AVE NW
SUITE 700
WASHINGTON DC 20036

COPY MAILED

APR 0 5 2005

OFFICE OF PETITIONS

In re Application	:	
Ojima, et al.	:	DECISION REGARDING
Application No. 10/159,287	:	PATENT TERM ADJUSTMENT
Filed: June 3, 2002	:	
Attorney Docket No. 020735	:	

This decision is in response to the paper titled "STATEMENT REGARDING AMENDED TITLE OF INVENTION AND REQUEST FOR NO REDUCTION OF PATENT TERM ADJUSTMENT", filed September 10, 2004.

The request is **DISMISSED**.

On August 10, 2004, the Office mailed the Determination of Patent Term Adjustment under 35 U.S.C. 154(b) in the above identified application. The Notice stated that the patent term adjustment (PTA) to date is thirteen (13) days. On September 10, 2004, Applicants timely[1] submitted the instant application for patent term adjustment, asserting that they should not be assessed any patent term adjustment for the filing of an amendment to the

[1] Applicant filed the application for patent term adjustment on the same date as the issue fee.

title of the invention.

A review of the application confirms that the correct determination of patent term adjustment at the time of mailing of the Notice of Allowance is thirteen (13) days (39 days of PTO delay, reduced by 26 days of applicant delay). Any further applicant delay which may or may not be incurred from the filing of papers after the Notice of Allowance should be reflected in the patent term adjustment as indicated on the Issue Notification. Accordingly, the issue is not ripe at this time.

The application file is being forwarded to the Office of Patent Publication for processing into a patent.

Telephone inquiries specific to this letter should be directed to Cliff Congo, Petitions Attorney, at (571)272-3207.

Kery A Fries
for

Karin Ferriter
Senior Legal Advisor
Office of Patent Legal Administration
Office of Deputy Commissioner
for Patent Examination Policy

UNITED STATES PATENT AND TRADEMARK OFFICE

Commissioner for Patents
United States Patent and Trademark Office
P. O. Box 1450
Alexandria, VA 22313-1450
www. uspto. gov

Paper No. 13

PILLSBURY WINTHROP LLP
2550 HANOVER STREET
PALO ALTO, CA 94304

COPY MAILED
MAY 2 5 2004
OFFICE OF PETITIONS

In re Application of
Jalai Ashjaee et al
Application No. 10/159,295
Filed: May 31, 2002
Attorney Docket No. 042496/0293267

: LETTER

This is in response to the paper filed March 29, 2004 under 37 CFR 1.27(c) seeking status as a small entity.

The Statement Claiming Small Entity Status of March 29, 2004 has been made of record and small entity status has been accorded.

The application file is being forwarded to the Publishing Division.

Irvin Dingle
Petitions Examiner
Office of Petitions
Office of the Deputy Commissioner
for Patent Examination Policy

UNITED STATES PATENT AND TRADEMARK OFFICE

Commissioner for Patents
United States Patent and Trademark Office
P.O. Box 1450
Alexandria, VA 22313-1450
www.uspto.gov

AUG 11 2004

PILLSBURY WINTHROP LLP
2550 HANOVER STREET
PALO ALTO CA 94304

#16

In re Application of	:	
Jalal Ashjaee et al	:	NOTICE OF WITHDRAWAL
Serial No.: 10/159,295	:	FROM ISSUE
Filed: May 31, 2002	:	UNDER 37 CFR 1.313(a)
Atty Docket No. 042496/0293267	:	

The above-identified application is withdrawn from issue after payment of the issue fee due to unpatentability of one or more claims. See 37 CFR 1.313(a).

The above-identified application is hereby withdrawn from issue.

The issue fee is refundable upon written request. If, however, the application is again found allowable, the issue fee can be applied toward payment of the issue fee in the amount identified on the new Notice of Allowance and Issue Fee Due upon written request. This request and any balance due must be received on or before the due date noted in the new Notice of Allowance in order to prevent abandonment of the application.

The application is being forwarded to the Examiner for action.

John E. Kittle
Director
Technology Center 3700/2900

UNITED STATES PATENT AND TRADEMARK OFFICE

COMMISSIONER FOR PATENTS
UNITED STATES PATENT AND TRADEMARK OFFICE
P.O. BOX 1450
ALEXANDRIA, VA 22313-1450
www.uspto.gov

AUG 11 2004

Paper No. 15

In re Application of
Jalal Ashjaee *et al*
Application No. 10/159,295
Filed: May 31, 2002
Attorney Docket No. 042496/0293267

DECISION ON PETITION

This is a decision on the petition to withdraw this application from issue that was filed on <arch 29, 2004. The petition fee of $130.00 has been paid.

The petition is dismissed.

The petition was filed following allowance of this application on March 9, 2004, and prior to payment of the issue fee. The issue fee was subsequently paid.

The petition does not set forth any basis for withdrawing this application from issue, because it fails to contain any showing of good and sufficient reasons why it is necessary that the application should be withdrawn from issue. See 37 CFR 1.313(a) and MPEP § 1308, subsection "I. Withdrawal from Issue at the Initiative of Applicant", part 1, entitled ""Prior to the Payment of Issue Fee." Rather, it appears that this petition was filed in order to obtain consideration of an Information Disclosure Statement (IDS). However, such consideration can be obtained by compliance with 37 CFR 1.97(d), that is, after allowance but prior to payment of the issue fee, without the necessity of withdrawing the application from issue.

Accordingly, the application file was forwarded to the examiner for consideration of whether the IDS is in compliance with 37 CFR 1.97(d), and consideration of the information listed in the IDS if the IDS complies with the regulation. The examiner has reported to the undersigned that consideration of the IDS indicates that one or more claims appears to be unpatentable.

Accordingly, this application will be withdrawn from issue and an Office action regarding the patentability of the claims will be promulgated. The withdrawal from issue will be pursuant to 37 CFR 1.313(b), and will be accomplished in accordance with MPEP § 1308, subsection "II. Withdrawal from Issue at the Initiative of the Office", part 2, entitled "Withdrawal from Issue after Payment of the Issue Fee."

PETITION DISMISSED.

E. Rollins-Cross, Director
Technology Center 3700

Pillsbury Winthrop LLP
2550 Hanover Street
Palo Alto, CA

UNITED STATES PATENT AND TRADEMARK OFFICE

Commissioner for Patents
United States Patent and Trademark Office
P.O. Box 1450
Alexandria, VA 22313-1450
www.uspto.gov

AGILENT TECHNOLOGIES, INC.
Legal Department, DL429
Intellectual Property Administration
P.O. Box 7599
Loveland, CO 80537-0599

COPY MAILED

MAY 27 2008

OFFICE OF PETITIONS

In re Application of Anvar :
Application No. 10/159,301 :
Filing Date: May 31, 2002 :
Attorney Docket No. 10004417-1 :

Decision on Petition

This is a decision on the petition under 37 CFR 1.137(b), filed January 11, 2008, to revive the above-identified application.

The petition is **granted**.

The above-identified application became abandoned for failure to submit the issue fee and publication fee in a timely manner in reply to the Notice of Allowance mailed October 1, 2007, which set a statutory period for reply of three (3) months. Accordingly, the above-identified application became abandoned on Thursday, January 3, 2008.

The instant petition requests revival of the application. Petitioner has submitted the required petition fee of $1,540. Petitioner has submitted a reply to the Notice of Allowance in the form of the issue fee and publication fee. Petitioner has stated the entire delay in filing the required reply from the due date for the reply until the filing of a grantable petition pursuant to 37 CFR 1.137(b) was unintentional.

Petitioner has met the requirements to revive the above-identified application pursuant to 37 CFR 1.137(b). Therefore, the petition is granted and the application is revived.

The Office of Data Management will be informed of the instant decision and the application will be issued as a patent in due course.

Telephone inquiries regarding this communication should be directed to Petitions Attorney Steven Brantley at (571) 272-3203.

Charles Steven Brantley
Senior Petitions Attorney
Office of Petitions

UNITED STATES PATENT AND TRADEMARK OFFICE

COMMISSIONER FOR PATENTS
UNITED STATES PATENT AND TRADEMARK OFFICE
P.O. BOX 1450
ALEXANDRIA, VA 22313-1450
www.uspto.gov

BERRY & ASSOCIATES P.C.
9255 SUNSET BOULEVARD
SUITE 810
LOS ANGELES CA 90069

COPY MAILED

APR 0 2 2007

OFFICE OF PETITIONS

In re Application of	:	
PIVOWAR et al.	:	
Application No.: 10/159,321	:	DECISION ON PETITION
Filing Date: May 31, 2002	:	UNDER 37 CFR 1.137(b)
Attorney Docket No.: PALM-3798	:	

This is a decision on the petition under 37 CFR 1.137(b), filed December 27, 2006, to revive the above-identified application.

The petition is **GRANTED.**

The above-identified application became abandoned for failure to reply in a timely manner to the final Office action mailed April 8, 2005, which set a shortened statutory period for reply of three (3) months. No extensions of time of under the provisions of 37 CFR 1.136(a) were obtained. Accordingly, by operation of law, the above-identified application became abandoned on July 8, 2005.

The petition satisfies the conditions for revival pursuant to the provisions of 37 CFR 1.137(b) in that (1) the reply in the form of a Request for Continued Examination and remarks; (2) the petition fee; and (3) the required statement of unintentional delay have been received. Accordingly, the reply to the final Office action mailed April 8, 2005 is accepted as having been unintentionally delayed.

This application is being referred to Technology Center AU 2162 for appropriate action, if any, on the reply in due course.

Telephone inquiries concerning this decision should be directed to the undersigned at (571) 272-3301.

Daniel Stemmer
Legal Examiner
Office of the Deputy Commissioner
for Patent Examination Policy

UNITED STATES PATENT AND TRADEMARK OFFICE

Commissioner for Patents
United States Patent and Trademark Office
Washington, D.C. 20231
www.uspto.gov

Paper No. 6

E I DU PONT DE NEMOURS AND COMPANY
LEGAL PATENT RECORDS CENTER
BARLEY MILL PLAZA 25/1128
4417 LANCASTER PIKE
WILMINGTON, DE 19805

COPY MAILED

JAN 23 2003

OFFICE OF PETITIONS

In re Application of:
Arthur William Etchals III, Charles
Linfred Henderson, Felix Alfred
Streiff and Andreas Walder
Application No. 10/159,333
Filed: May 31, 2002
Title of Invention: PROCESS FOR BLENDING FLUIDS OF WIDELY DIFFERING VISCOSITIES

DECISION GRANTING STATUS UNDER 37 CFR 1.47(a)

This is in response to the Petition Under 37 C.F.R. 1.47(a), filed December 2, 2002, to allow the other inventor(s) to proceed with the application on behalf of himself or herself and the nonsigning inventor. A four (4) month extension-of-time is requested and is hereby granted.

The petition is **granted**.

The above-identified application and papers have been reviewed and found in compliance with 37 CFR 1.47(a). This application is hereby accorded Rule 1.47(a) status.

Petitioner has shown that the non-signing inventor, Felix Alfred Streiff, refuses to sign the declaration after being presented with the above-identified application and declaration.

As provided in Rule 1.47(a), this Office will forward notice of this application's filing to the non-signing inventor at the addresses given in the Petition. Notice of the filing of this application will also be published in the Official Gazette.

The application file is being forwarded to the Office of Initial Patent Examination for continued processing.

Telephone inquiries related to this decision may be directed to the undersigned at (703) 305-0014.

Derek L. Woods
Petitions Attorney
Office of Petitions
Office of the Deputy Commissioner
for Patent Examination Policy

UNITED STATES PATENT AND TRADEMARK OFFICE

Commissioner for Patents
United States Patent and Trademark Office
Washington, D.C. 20231
www.uspto.gov

Mr. Felix A. Streiff
Oberes Gueetli 1
CH-8457 Humlikon

COPY MAILED

JAN 2 3 2003

OFFICE OF PETITIONS

In re Application of:
Arthur William Etchals III, Charles
Linfred Henderson, Felix Alfred
Streiff and Andreas Walder
Application No. 10/159,333
Filed: May 31, 2002
Title of Invention: PROCESS FOR
BLENDING FLUIDS OF WIDELY DIFFERING
VISCOSITIES

LETTER

Dear Mr. Streiff:

You are named as a joint inventor in the above-identified United States patent application filed under the provisions of 35 U.S.C. 116 (United States Code) and 37 CFR 1.47(a), Rules of Practice in Patent Cases. Should a patent be granted on the application you will be designated therein as a joint inventor.

As a named inventor you are entitled to inspect any paper in the file wrapper of the application, order copies of all or any part thereof (at a prepaid cost per 37 CFR 1.19) or make your position of record in the application. Alternatively, you may arrange to do any of the preceding through a registered patent attorney or agent presenting written authorization from you. If you care to join the application, counsel of record (see below) would presumably assist you. Joining in the application would entail the filing of an appropriate oath or declaration by you pursuant to 37 CFR 1.63.

Telephone inquiries regarding this communication should be directed to Petitions Attorney Derek L. Woods at (703) 305-0014. Requests for information regarding your application should be directed to the File Information Unit at (703) 308-2733. Information regarding how to pay for and order a copy of the application, or a specific paper in the application, should be directed to Certification Division at (703) 308-9726 or 1-800-972-6382 (outside the Washington D.C. area).

Derek L. Woods
Petitions Attorney
Office of Petitions
Office of the Deputy Commissioner
for Patent Examination Policy

cc: E I DU PONT DE NEMOURS AND COMPANY
LEGAL PATENT RECORDS CENTER
BARLEY MILL PLAZA 25/1128
4417 LANCASTER PIKE
WILMINGTON, DE 19805

UNITED STATES PATENT AND TRADEMARK OFFICE

COMMISSIONER FOR PATENTS
UNITED STATES PATENT AND TRADEMARK OFFICE
WASHINGTON, D.C. 20231
www.uspto.gov

Paper No. 6

MCNEES, WALLACE & NURICK
100 PINE STREET
P.O. BOX 1166
HARRISBURG, PA 17108-1166

COPY MAILED

MAY 16 2003

OFFICE OF PETITIONS

In re Application of :
Fine, et al. :
Application No. 10/159,350 : DECISION GRANTING STATUS
Filed: May 31, 2002 : UNDER 37 CFR 1.47(a)
Atty. Dkt. No.: 20808-006 :
For: METHODS AND APPARATUS FOR :
PERSONALIZED, INTERACTIVE SHOPPING :

This is in response to the petition under 37 CFR 1.47(a), filed January 3, 2003.

The petition is **GRANTED**.

Petitioner has shown that inventors Randall A. Fine, Dan Cuetara, Catherine Julie Elder, and Alan Dziejma have refused to join in the filing of the above-identified application after having been presented with the application papers.

The above-identified application and papers have been reviewed and found in compliance with 37 CFR 1.47(a). This application is hereby accorded Rule 1.47(a) status.

As provided in Rule 1.47(c), this Office will forward notice of this application's filing to the non-signing inventor at the address given in the petition. Notice of the filing of this application will also be published in the Official Gazette.

After this decision is mailed, the above-identified application will be returned to the Office of Initial Patent Examination for further processing.

Telephone inquiries related to this decision may be directed to the undersigned at (703) 305-0310.

Alesia M. Brown
Petitions Attorney
Office of Petitions
Office of the Deputy Commissioner
for Patent Examination Policy

UNITED STATES PATENT AND TRADEMARK OFFICE

COMMISSIONER FOR PATENTS
UNITED STATES PATENT AND TRADEMARK OFFICE
WASHINGTON, D.C. 20231
www.uspto.gov

COPY MAILED

MAY 16 2003

OFFICE OF PETITIONS

RANDALL A. FINE
2121 E. WARM SPRINGS ROAD #2116
LAS VEGAS, NV 89119

In re Application of :
Fine, et al. :
Application No. 10/159,350 : LETTER
Filed: May 31, 2002 :
Atty. Dkt. No.: 20808-006 :
For: METHODS AND APPARATUS FOR :
PERSONALIZED, INTERACTIVE SHOPPING :

Dear Sir:

You are named as an inventor in the above-identified United States patent application filed under the provisions of 35 U.S.C. 116 (United States Code) and 37 C.F.R. § 1.47(a), Rules of Practice in Patent Cases. Should a patent be granted on the application you will be designated therein as a joint inventor.

As a named inventor you are entitled to inspect any paper in the file wrapper of the application, order copies of all or any part thereof (at a prepaid cost as per 37 C.F.R. § 1.19) or make your position of record in the application. Alternatively, you may arrange to do any of the preceding through a registered patent attorney or agent presenting written authorization from you. If you care to join the application, counsel of record (see below) would presumably assist you. Joining in the application would entail the filing of an appropriate oath or declaration by you pursuant to 37 C.F.R. § 1.63.

Telephone inquiries regarding this communication should be directed to the undersigned at (703) 305-0310. Requests for information regarding your application should be directed to the File Information Unit at (703) 308-2733. Information regarding how to pay for and order a copy of the application, or a specific paper in the application, should be directed to Certification Division at (703) 308-9726 or 1-800-972-6382 (outside the Washington D.C. area).

Alesia M. Brown
Petitions Attorney
Office of Petitions
Office of the Deputy Commissioner
for Patent Examination Policy

UNITED STATES PATENT AND TRADEMARK OFFICE

Commissioner for Patents
United States Patent and Trademark Office
P.O. Box 1450
Alexandria, VA 22313-1450
www.uspto.gov

SEP 28 2005

DEBRA M. PARRISH, ESQ.
PARRISH LAW OFFICES
SUITE 200
615 WASHINGTON RD.
PITTSBURGH PA 15228

In re Application of	:
Nita J. Maihleet al	:
Serial No.: 10/159,353	: PETITION DECISION
Filed: May 31, 2002	:
Attorney Docket No.: 01-03MAIHLE	:

This is in response to the petition under 37 CFR 1.181, filed August 25, 2005, for withdrawal of abandonment of the above identified application based on non-receipt of an Office action.

A review of the file history shows that the examiner mailed an Office action to applicants on December 15, 2003, setting a three month shortened statutory period for reply. Applicants replied on June 15, 2004, with amendments to the specification and claims and arguments and a three month extension of time request and fee. The amendment was non-compliant with rules for amending applications in effect at that time. A letter of Non-Compliant amendment was mailed to applicants on September 21, 2004. Applicants state, when contacted by the examiner concerning potential abandonment, that they had never received the Non-Compliant letter and filed a "LETTER" to the examiner on May 25, 2005, requesting restarting of the period for reply based on the date of the telephone interview, May 23, 2005. Applicants also obtained a copy of the Notice via public PAIR and filed a response to the letter on June 8, 2005. A Notice of Abandonment was mailed to applicants on August 11, 2005, indicating the petition (letter) filed 2/25/2005 (sic 5/25/2005) was not a proper petition. Applicants filed a proper petition on August 25, 2005.

Initially it should be noted that examiners are without authority to grant a restarting of a period for reply to an Office action, especially when the statutory period for reply thereto has expired. Applicants' letter of May 25, 2005, in the guise of a petition, could not be accepted by the examiner for purposes of restarting the time period for reply. Only a proper petition could effect such an action. The petition filed August 11, 2005, is sufficient for granting withdrawal of abandonment of the application except that the revised amendment submitted June 8, 2005, is not proper with respect to the amendments to the specification. Such amendments must reproduce the entire paragraph in which the amendment is being made and show the changes by underlining and strikethrough. The amendments to the claims, however, appear to be proper.

The Notice of Abandonment in this application is withdrawn conditioned upon applicants submitting a conforming amendment of the specification within ONE MONTH of the mailing date of this decision.

The petition is **GRANTED subject to the condition noted above**.

The application will be forwarded to the examiner for further consideration upon submission and entry of a proper amendment to the specification.

Should there be any questions about this decision please contact William R. Dixon, Jr., by letter addressed to Director, TC 1600, at the address listed above, or by telephone at 571-272-0519 or by facsimile sent to the general Office facsimile number, 571-273-8300.

Jasemine C. Chambers
Director, Technology Center 1600

SPE RESPONSE FOR CERTIFICATE OF CORRECTION

Paper No.: _____

DATE : 11/5/08

TO SPE OF : ART UNIT 1647

SUBJECT : Request for Certificate of Correction for Appl. No.: 10159353 Patent No.: 7390632

Please respond to this request for a certificate of correction within 7 days.

FOR IFW FILES:

Please review the requested changes/corrections as shown in the **COCIN** document(s) in the IFW application image. No new matter should be introduced, nor should the scope or meaning of the claims be changed.

Please complete the response (see below) and forward the completed response to scanning using document code **COCX**.

FOR PAPER FILES:

Please review the requested changes/corrections as shown in the attached certificate of correction. Please complete this form (see below) and forward it with the file to:

Certificates of Correction Branch (CofC)
South Tower - 9A22
Palm Location 7580

Valerie Jackson
Certificates of Correction Branch
703-308-9390 ext. 114

Thank You For Your Assistance

The request for issuing the above-identified correction(s) is hereby:
Note your decision on the appropriate box.

- ☐ **Approved** — **All** changes apply.
- ☐ **Approved in Part** — Specify below which changes **do not** apply.
- ☑ **Denied** — State the reasons for denial below.

Comments: The amendment of Seq.i.d. 1 by inserting 7 nucleic acids at position 1762 is not supported in spec, cannot be considered typographical error and is therefore denied entry.

Applicants need to request cancelling figures 1A to 1Q. Figures cannot be withdrawn.

(M. RAD)
SPE

1647
Art Unit

UNITED STATES PATENT AND TRADEMARK OFFICE

COMMISSIONER FOR PATENTS
UNITED STATES PATENT AND TRADEMARK OFFICE
P.O. BOX 1450
ALEXANDRIA, VA 22313-1450
www.uspto.gov
DIW May-05

RITTER, LANG & KAPLAN
P.O. BOX 2448
SARATOGA CA 95070

COPY MAILED
JUN 0 1 2005
OFFICE OF PETITIONS

In re Patent No. 6,799,253 :
Issued: 28 September, 2004 :
Application No. 10/159,393 : ON PETITION
Filed: 30 May, 2002 :
Atty Docket No. ORACP003 :

This is a decision on the petition filed on 28 March, 2005, which is being treated as a request under 37 CFR 3.81(b)[1] to correct the assignee on the front page of the above-identified patent by way of a Certificate of Correction.

The petition is **granted**.

The address listed on the petition is different than the address contained in Office records. A courtesy copy of this decision will be mailed to petitioner. However, all future correspondence will be directed to the address of record until such time as appropriate instructions are received to the contrary.

Telephone inquires concerning this matter may be directed to the undersigned at 571.272.3231. Any questions concerning the issuance of the Certificate of Correction should be directed to the Certificates of Correction Branch at 703.305.8309.

The file is being forwarded to the Certificates of Correction Branch for issuance of the requested Certificate of Correction.

DWood

Douglas I. Wood
Senior Petitions Attorney
Office of Petitions

cc: Ritter, Lang & Kaplan LLP
12930 Saratoga Ave., Ste. D1
Saratoga CA 95070

[1] See Official Gazette of 22 June, 2004.

UNITED STATES PATENT AND TRADEMARK OFFICE

Commissioner for Patents
United States Patent and Trademark Office
P.O. Box 1450
Alexandria, VA 22313-1450
www.uspto.gov

THE PROCTER & GAMBLE COMPANY
INTELLECTUAL PROPERTY DIVISION - WEST BLDG.
WINTON HILL BUSINESS CENTER - BOX 412
6250 CENTER HILL AVENUE
CINCINNATI OH 45224

COPY MAILED
OCT 15 2007
OFFICE OF PETITIONS

In re Application of	:	
Dean Van Phan et al.	:	
Application No. 10/159,395	:	ON PETITION
Filed: May 30, 2002	:	
Attorney Docket No. 7764D	:	

This is a decision on the petition under the unintentional provisions of 37 CFR 1.137(b), filed January 10, 2007, to revive the above-identified application.

The petition is **GRANTED**.

This application became abandoned as a result of petitioner's failure to take appropriate action in a timely manner after the decision of September 29, 2006 by the Board of Patent Appeals and Interferences. Therefore, the proceedings as to the rejected claims were terminated. See 37 CFR 1.197(b). As no claim was allowed, the application became abandoned on November 30, 2006. See MPEP 1214.06.

The petition satisfies the requirements of 37 CFR 1.137(b) in that petitioner has supplied (1) the reply in the form of a Request for Continued Examination (RCE) and fee of $790, and the submission required by 37 CFR 1.114; (2) the petition fee of $1,500; and (3) a proper statement of unintentional delay.

Telephone inquiries concerning this decision should be directed to Terri Williams at (571) 272-2991.

This application is being referred to Technology Center AU 1731 for processing of the RCE and for appropriate action by the Examiner in the normal course of business on the amendment submitted in accordance with 37 CFR 1.114.

Liana Walsh
Petitions Examiner
Office of Petitions

UNITED STATES PATENT AND TRADEMARK OFFICE

COMMISSIONER FOR PATENTS
UNITED STATES PATENT AND TRADEMARK OFFICE
P.O. BOX 1450
ALEXANDRIA, VA 22313-1450
www.uspto.gov

PAUL HASTINGS JANOFSKY & WALKER LLP
12390 EL CAMINO REAL
SAN DIEGO, CA 92130

COPY MAILED
JUL 25 2006
OFFICE OF PETITIONS

In re Application of	:	
Phillip Felgner et al	:	
Application No. 10/159,428	:	DECISION ON PETITION
Filed: May 29, 2002	:	TO WITHDRAW
Attorney Docket No. 40019-0009	:	FROM RECORD
	:	

This is a decision on the Request to Withdraw as attorney or agent under 37 C.F.R. § 1.36(b) or 37 C.F.R. § 10.40 filed September 12, 2005 and November 18, 2005.

The request is **NOT APPROVED**.

A review of the file record indicates that Jane I. Song and Amy E. Simpson do not have power of attorney in this patent application nor is there any statement or evidence of record of employment in or otherwise being engaged in the proceedings in this patent application. Accordingly, the request to withdraw under 37 C.F.R. § 1.36(b) is not applicable.

All future communications from the Office will continue to be directed to the below-listed address until otherwise properly notified by the applicant.

Telephone inquires concerning this decision should be directed to Irvin Dingle at 571-272-3210.

for Denise Pothier
Petitions Examiner
Office of Petitions

cc: Heller Ehrman LLP
4350 La Jolla Village Drive #700
7th Floor
San Diego, CA 92122

UNITED STATES PATENT AND TRADEMARK OFFICE

UNITED STATES DEPARTMENT OF COMMERCE
United States Patent and Trademark Office
Address: COMMISSIONER FOR PATENTS
P.O. Box 1450
Alexandria, Virginia 22313-1450
www.uspto.gov

APPLICATION NO.	FILING DATE	FIRST NAMED INVENTOR	ATTORNEY DOCKET NO.	CONFIRMATION NO.
10/159,441	05/31/2002	Dennis William Mueller	191314-1040	9373

24504 7590 11/04/2004

THOMAS, KAYDEN, HORSTEMEYER & RISLEY, LLP
100 GALLERIA PARKWAY, NW
STE 1750
ATLANTA, GA 30339-5948

EXAMINER
SAINT SURIN, JACQUES M

ART UNIT	PAPER NUMBER
2856	

DATE MAILED: 11/04/2004

Please find below and/or attached an Office communication concerning this application or proceeding.

UNITED STATES PATENT AND TRADEMARK OFFICE

Commissioner for Patents
United States Patent and Trademark Office
P.O. Box 1450
Alexandria, VA 22313-1450
www.uspto.gov

NOV 1 2004

Paper No. 102604

THOMAS, KAYDEN, HORSTEMEYER & RISLEY, LLP
100 Galleria PAarkway, NW
STE 1750
Atlanta, GA 30339-5948

In re Application of:
Dennis William Mueller
Serial No.: 10/159,441
Filed: May 31, 2002
Attorney Docket No.: **191314-1040**

DECISION ON PETITION TO WITHDRAW HOLDING OF ABANDONMENT

This is a decision on the petition filed July 16, 2004. The petition has been treated as a petition under 37 CFR § 1.181, to withdraw the holding of abandonment in the above-identified application. No petition fee is required.

The petition is **GRANTED**.

The application was held abandoned for the failure to timely file a response to the Office action mailed on June 27, 2003. A Notice of Abandonment was mailed on June 15, 2004.

Petitioner asserts that on September 29, 2003, a response was timely filed in the above-identified application. To support this assertion, petitioner has submitted a copy of the response bearing a certificate under 37 CFR § 1.8(a), signed and dated September 29, 2003, and a copy of a return postcard, which acknowledges receipt in the USPTO of the response on October 02, 2003.

A review of the application file reveals the above noted response was not matched with the application file wrapper at the time of mailing of the Notice of Abandonment. The above-identified response filed September 29, 2003, has since been located and matched with the file wrapper.

For the above stated reason, the petition is granted. The Notice of Abandonment is hereby vacated and the holding of abandonment withdrawn. The application is restored to pending status.

The application file is being forwarded to the examiner of record for consideration of the response and prompt appropriate action.

Inquiries regarding this decision should be directed to Clayton E. LaBalle at (571) 272-1594.

Howard N. Goldberg, Director
Technology Center 2800
Semiconductors, Electrical and Optical
Systems and Components

UNITED STATES PATENT AND TRADEMARK OFFICE

Commissioner for Patents
United States Patent and Trademark Office
P.O. Box 1450
Alexandria, VA 22313-1450
www.uspto.gov

THOMAS, KAYDEN, HORSTEMEYER & RISLEY
100 GALLERIA PARKWAY, NW
STE 1750
ATLANTA, GA 30339-5948

COPY MAILED

MAR 0 7 2005

OFFICE OF PETITIONS

In re Application of	:
Dennis W. Mueller	:
Application No. 10/159,441	: DECISION ON PETITION
Filed: May 31, 2002	: UNDER 37 CFR 1.78(a)(6)
Attorney Docket No. 191314-1040	:

This is a decision on the petition under 37 CFR 1.78(a)(6), filed November 29, 2004, and supplemented on February 10, 2005, to accept an unintentionally delayed claim under 35 U.S.C. §119(e) for the benefit of the prior-filed provisional application set forth in the amendment filed February 10, 2005.

The petition is **GRANTED**.

A petition under 37 CFR 1.78(a)(6) is only applicable to those applications filed on or after November 29, 2000. Further, the petition is appropriate only after expiration of the period specified in 37 CFR 1.78(a)(5)(ii) and must be filed during the pendency of the nonprovisional application. In addition, the petition must be accompanied by:

(1) the reference required by 35 U.S.C. § 119(e) and 37 CFR 1.78(a)(5)(i) to the prior-filed application, unless previously submitted;
(2) the surcharge set forth in § 1.17(t); and
(3) a statement that the entire delay between the date the claim was due under 37 CFR 1.78(a)(5)(ii) and the date the claim was filed was unintentional. The Commissioner may require additional information where there is a question whether the delay was unintentional.

The instant nonprovisional application was filed after November 29, 2000, and the claim herein for the benefit of priority to the prior-filed provisional application is submitted after expiration of the period specified in 37 CFR 1.78(a)(5)(ii). Therefore, this is a proper petition under 37 CFR 1.78(a)(6).

The instant nonprovisional application was pending at the time of filing of the reference to the prior-fiiled provisional application as required by 37 CFR 1.78(a)(5)(iii). Additionally, the instant nonprovisional application was filed within twelve months of the filing date of the prior-filed provisional application, Application No. 60/378,450, which was filed on May 7, 2002, for which priority is claimed.

The petition complies with the requirements for a grantable petition under 37 CFR 1.78(a)(6) in that (1) a reference to the above-noted, prior-filed provisional application has been included in an amendment to the first sentence of the specification following the title, as provided by 37 CFR 1.78(a)(5)(iii); (2) the surcharge fee required by 37 CFR 1.17(t) has been submitted; and (3) the petition contains a proper statement of unintentional delay. Accordingly, having found that the instant petition for acceptance of an unintentionally delayed claim for the benefit of priority under 35 U.S.C. § 119(e) to the above-noted, prior-filed provisional application satisfies the conditions of 37 CFR 1.78(a)(6), the petition is granted.

The granting of the petition to accept the delayed benefit claim to the prior-filed application under 37 CFR 1.78(a)(6) should not be construed as meaning that the instant application is entitled to the benefit of the filing date of the prior-filed application. In order for the instant application to be entitled to the benefit of the prior-filed application, all other requirements under 35 U.S.C. §119(e) and 37 CFR 1.78(a)(4) and (a)(5) must be met. Similarly, the fact that the corrected Filing Receipt accompanying this decision on petition includes the prior-filed application should not be construed as meaning that applicant is entitled to the claim for benefit of priority to the prior-filed application noted thereon. Accordingly, the examiner will, in due course, consider this benefit claim and determine whether the instant application is entitled to the benefit of the earlier filing date.

A corrected Filing Receipt, which includes the priority claim to the prior-filed provisional application, accompanies this decision on petition.

Any inquiries concerning this decision may be directed to the undersigned at (571) 272-3208. All other inquiries concerning either the examination procedures or status of the application should be directed to the Technology Center.

The application is being forwarded to Technology Center AU 2856 for appropriate action on the amendment submitted February 10, 2005, including consideration by the examiner of the claim under 35 U.S.C. §119(e) for the benefit of priority to prior-filed provisional Application No. 60/378,450, filed May 7, 2002.

Karen Creasy

Karen Creasy
Petitions Examiner
Office of Petitions
Office of the Deputy Commissioner
for Patent Examination Policy

ATTACHMENT: Corrected Filing Receipt

UNITED STATES PATENT AND TRADEMARK OFFICE

UNITED STATES DEPARTMENT OF COMMERCE
United States Patent and Trademark Office
Address: COMMISSIONER FOR PATENTS
P.O. Box 1450
Alexandria, Virginia 22313-1450
www.uspto.gov

APPLICATION NO.	FILING DATE	FIRST NAMED INVENTOR	ATTORNEY DOCKET NO.	CONFIRMATION NO.
10/159,449	05/31/2002	Girsh Blumberg	3-3	9350

22046 7590 08/12/2009
Docket Administrator - Room 2F-192
Alcatel-Lucent USA Inc.
600-700 Mountain Avenue
Murray Hill, NJ 07974

EXAMINER
THOMAS, JAISON P

ART UNIT	PAPER NUMBER
1796	

MAIL DATE	DELIVERY MODE
08/12/2009	PAPER

Please find below and/or attached an Office communication concerning this application or proceeding.

The time period for reply, if any, is set in the attached communication.

UNITED STATES PATENT AND TRADEMARK OFFICE

Commissioner for Patents
United States Patent and Trademark Office
P.O. Box 1450
Alexandria, VA 22313-1450
www.uspto.gov

wk

AUG 12 2009

In re application of
Blumberg et al.
Serial No. 10/159,449
Filed: May 31, 2002
For: Voltage Regulators

DECISION ON PETITION

This is a decision on the request filed on May 19, 2009 originally filed as a petition under 73CFR 41.3; 41.4 and is before the Technology Center Director and being considered as a petition under 37 CFR 1.181. The request is to have the Examiner's Answer that was mailed on August 1, 2008 be remailed to the current address of record and that the period for response be restarted from the date of mailing.

DECISION

The Examiner's Answer was mailed on August 1, 2008 to the current address of record on the file. The Answer was returned to the Office by the U.S. Postal Service on August 7, 2008. Applicant filed a new correspondence address that was entered on August 5, 2008.

A review of the petitioner's evidence indicates that the request has merit. MPEP 703.13 discusses returned mail:

> Office actions are sometimes returned to the Office because the United States Postal Service has not been able to deliver them. Upon receipt of the returned Office action, the Technology Center (TC) technical support staff will check the application file record to ensure that the Office action was mailed to the correct correspondence address. If the Office action was not mailed to the correct correspondence address, it should be stamped "remailed" with the remailing date and mailed to the correct correspondence address. The period running against the application begins with the date of remailing.

In the instant application, the answer was mailed before, but returned after, the change of address was filed. It is thus reasonable to simply remail the answer to the new address since the correct new address would have been apparent upon a standard review of the file at the time the answer was returned.

The Petition is **GRANTED**.

The Examiner's Answer will be mailed to the address of record and the period for response restarted.

/Gregory L Mills/
Gregory L. Mills, Acting Director
Technology Center 1700
Chemical and Materials Engineering

John F. McCabe
Docket Administrator - Room 2F-192
Alcatel-Lucent USA Inc.
600-700 Mountain Avenue
Murray Hill NJ 07974

UNITED STATES
PATENT AND
TRADEMARK OFFICE

UNDER SECRETARY OF COMMERCE FOR INTELLECTUAL PROPERTY AND
DIRECTOR OF THE UNITED STATES PATENT AND TRADEMARK OFFICE
WASHINGTON, D.C. 20231
WWW.USPTO.GOV

Paper No. 6

Philip I. Datlow
Patent Department
Boehringer Ingelheim Corp.
900 Ridgebury Road
P.O. Box 368
Ridgefield, CT. 06877

Date: September 25, 2003
Application No. 10/159,451
Filed: October 31, 1997
Subject: **CAPSULES CONTAINING INHALABLE TIOTROPIUM**

ON PETITION
37 CFR 1.48(a)

Receipt is acknowledged of the petitions filed May 5, 2003, under 37 CFR 1.48(a) for correction of inventorship. The petition has been **GRANTED**.

In view of the papers filed , it has been found that this non-provisional application, as filed, through error and without deceptive intent, improperly set forth the Inventorship, and accordingly, this application has been changed by the addition of **MICHAEL TRUNK and MICHAEL WALZ**. The application will be forwarded to the Office of Initial Patent Examination(OIPE) for issuance of a corrected filing receipt, and correction of the file jacket and PTO PALM data to reflect the inventorship as corrected.

THURMAN K. PAGE
SUPERVISORY PATENT EXAMINER
TECHNOLOGY CENTER 1600

THURMAN K. PAGE
United States Patent and Trademark Office
Technology Center 1600
SPE, ART UNITS 1615 & 1616
CM1- 2B01
703-308-2927

UNITED STATES PATENT AND TRADEMARK OFFICE

COMMISSIONER FOR PATENT
UNITED STATES PATENT AND TRADEMARK OFFICE
WASHINGTON, D.C. 20231
www.uspto.go

Paper No. 8

MAILED

MAY 3 0 2003

Technology Center 2100

Nixon Peabody, LLP
8180 Greensboro Drive
Suite 800
McLean, Virginia 22102

In re Application of: Mark McDowell et al.	)	
Application No. 10/159,453	)	**DECISION ON PETITION**
Filed: May 31, 2002	)	**UNDER M.P.E.P. §708.02(II):**
For: SYSTEM AND METHOD FOR RE-	)	**INFRINGEMENT**
ROUTING OF E-MAIL MESSAGES	)	

This is a decision on the petition, filed 8 May 2003, under 37 C.F.R. §1.102(d) and M.P.E.P. §708.02(II): Infringement, to make the above-identified application special.

A grantable petition under 37 C.F.R. §1.102(d), and M.P.E.P. §708.02, Section II, must be accompanied by payment of the fee under 37 C.F.R.§1.117(h) and a statement under 37 C.F.R. §1.102 by the applicant or assignee or statements by an attorney/agent registered to practice before the Patent and Trademark Office that (A) there is an infringing device or product actually on the market or method in use; (B) a rigid comparison of the alleged infringing device, product, or method with the claims of the application has been made, and that, in his or her opinion, some of the claims are unquestionably infringed: and (C) he or she has made or caused to be made a careful and thorough search of the prior art or has a good knowledge of the prior art. A fee under 37 C.F.R. for such a petition is required .

Applicant's submission meets all the criteria set out above, accordingly, the Petition is **GRANTED**. The application file is being forwarded to the Examiner of Record for expedited examination.

Pinchus M. Laufer
Special Programs Examiner
Technology Center 2100
Computer Architecture, Software, and Information Security
(703) 306-4160

UNITED STATES PATENT AND TRADEMARK OFFICE

COMMISSIONER FOR PATENTS
UNITED STATES PATENT AND TRADEMARK OFFICE
P.O. BOX 1450
ALEXANDRIA, VA 22313-1450
www.uspto.gov

WAGNER, MURABITO & HAO LLP
TWO NORTH MARKET STREET, THIRD FLOOR
SAN JOSE, CA 95113

COPY MAILED
FEB 16 2006
OFFICE OF PETITIONS

In re Application of
Radoslav Danilak
Application No. 10/159,460
Filed: May 31, 2002
Attorney Docket No.: NVID-P000425

ON PETITION

This is a decision on the petition, filed February 14, 2006, under 37 CFR 1.313(c)(2) to withdraw the above-identified application from issue after payment of the issue fee.

The petition is **GRANTED**.

The above-identified application is withdrawn from issue for consideration of a submission under 37 CFR 1.114 (request for continued examination). See 37 CFR 1.313(c)(2).

Petitioner is advised that the issue fee paid on December 12, 2005, in the above-identified application cannot be refunded. If, however, the above-identified application is again allowed, petitioner may request that it be applied towards the issue fee required by the new Notice of Allowance. [1]

Telephone inquiries relating to this decision should be directed to the undersigned at (571) 272-3204.

The application is being referred to Technology Center AU 2133 for further processing of the request for continued examination under 37 CFR 1.114.

Sherry D. Brinkley
Petitions Examiner
Office of Petitions

[1]The request to apply the issue fee to the new Notice may be satisfied by completing and returning the new Issue Fee Transmittal Form PTOL-85(b), which includes the following language thereon: "Commissioner for Patents is requested to apply the Issue Fee and Publication Fee (if any) or re-apply any previously paid issue fee to the application identified above." Petitioner is advised that, whether a fee is indicated as being due or not, the Issue Fee Transmittal Form **must** be completed and timely submitted to avoid abandonment. Note the language in bold text on the first page of the Notice of Allowance and Fee(s) Due (PTOL-85).

UNITED STATES PATENT AND TRADEMARK OFFICE

Commissioner for Patents
United States Patent and Trademark Office
P.O. Box 1450
Alexandria, VA 22313-1450
www.uspto.gov

Date : February 15, 2006

TO : Director, Office of Patent Publication

FROM : Office of the Deputy Commissioner for Patent Examination Policy

SUBJECT : Withdrawal from Issue of

Applicant(s) : Radoslav Danilak
Application No. : 10/159,460
Filed : May 31, 2002

The above-identified application has been assigned Patent No. 7,007,224 and an issue date of February 28, 2006.

It is hereby directed that this application be withdrawn from issue at the request of the applicant.

Do not refund the issue fee.

The following erratum should be published in the Official Gazette if the above-identified application is published in the OG of February 28, 2006:

> "All reference to Patent No. 7,007,224 to RADOSLAV DANILAK of CALIFORNIA for TRANSPARENT ERROR CORRECTION CODE MEMORY SYSTEM AND METHOD appearing in the Official Gazette of February 28, 2006, should be deleted since no patent was granted."

Sherry D. Brinkley
Petitions Examiner
Office of Petitions

cc: Paul Harrison, Crystal Park 3-44l (FAX-306-2737)
Deneise Boyd, Crystal Park 2, Suite 1100 (FAX-308-5413)
Mary Louise McAskill, Crystal Park 3-910 (FAX 305-4372)
Niomi Farmer, Crystal Park 3-9l0 (FAX-305-4372)
Mary E. Johnson (Cookie), P/OCS, CM1-6D07
Duane K.Davis, P/OCS, CM1-6A07
Tamara K. Greene, PK3-910

UNITED STATES PATENT AND TRADEMARK OFFICE

COMMISSIONER FOR PATENTS
UNITED STATES PATENT AND TRADEMARK OFFICE
P.O. BOX 1450
ALEXANDRIA, VA 22313-1450
WWW.USPTO.GOV

Paper No. None

SCHNECK & SCHNECK
P.O. BOX 2-E
SAN JOSE CA 95109-0005

COPY MAILED

AUG 1 2 2005

OFFICE OF PETITIONS

In re Application of
Mellen-Thomas Benedict
Application No. 10/159,463
Filed: May 31, 2002
Attorney Docket Number: 7018-002
Title: LIGHT PROCESSING OF SELECTED BODY COMPONENTS

DECSION ON PETITION

This is a decision on the petition filed June 15, 2005, pursuant to 37 C.F.R. §1.137(a)[1], to revive the above-identified application.

The above-identified application became abandoned for failure to submit the issue fee in a timely manner in reply to the Notice of Allowance and Issue Fee Due, mailed September 22, 2004, which set a shortened statutory period for reply of three (3) months. No extensions of time are permitted for transmitting issue fees[2]. Accordingly, the above-identified application became abandoned on December 23, 2004.

With the present petition, Petitioner has submitted a statement of facts, the petition fee, and a copy of the Notice of Acceptance of Power of Attorney, mailed February 8, 2005.

A brief summary of the facts is as follows:

---

1 A grantable petition pursuant to 37 CFR §1.137(a) must be accompanied by:

(1) the required reply (in a nonprovisional application abandoned for failure to prosecute, the required reply may be met by the filing of a continuing application; in an application or patent, abandoned or lapsed for failure to pay the issue fee or any portion thereof, the required reply must be the payment of the issue fee or any outstanding balance thereof);
(2) the petition fee;
(3) a showing to the satisfaction of the Commissioner that the entire delay in filing the required reply from the due date for the reply until the filing of a grantable petition pursuant to this paragraph was unavoidable, and;
(4) a terminal disclaimer (and fee as set forth in §1.20(d)) required pursuant to paragraph (d) of this section.

2 See MPEP §710.02(e).

- On April 7, 2004, a non-final action was mailed to the attorney of record at the address of record, John F. Schipper, Esq., Suite 808, 111 N. Market Street, San Jose, CA, 951133.
- On July 30, 2004, the patentee filed a Revocation of Power of Attorney with New Power of Attorney and Change of Correspondence Address, granting power of attorney to the law firm Schneck & Schneck, and changing the address of record to the same.
- The Power of Attorney Revocation and the Change of Correspondence Address were not entered into the record until February 8, 2005.
- On September 2, 2004, an amendment was filed by Mr. Schipper, along with a two-month extension of time to make timely this response.
- The amendment was deemed to place the claims in condition for allowance, and a Notice of Allowance and Issue Fee Due was mailed to Mr. Schipper on September 22, 2004.
- An amendment was filed by the law firm of Schneck & Schneck on September 30, 2004, which was not entered.

As such, the amendment which placed the claims into a condition for allowance was received from a firm which did not have power of attorney at the time, and these claims were allowed by the Examiner. Petitioner has requested that the Office expunge the amendment of September 2, 2004 from the record, expunge the Notice of Allowance and Issue Fee Due, and enter the amendment of September 30, 2004.

The petition is **GRANTED-IN-PART**.

Petitioner has established that the entire period of delay was unavoidable. The petition under 37 C.F.R. §1.137(a) is granted.

A discussion of the requests to enter the amendment filed by the present firm and to expunge both the amendment filed by the previous firm and the notice of allowance and issue fee due will follow.

The regulations and portion of the MPEP relevant to the abandonment of this application

37 C.F.R. § 1.34, Recognition for representation, sets forth, in part:

(a) When a registered attorney or agent acting in a representative capacity, pursuant to § 1.31, appears in person or signs a paper in practice before the United States Patent and Trademark Office in a patent case, his or her personal appearance or signature shall constitute a representation to the United States Patent and Trademark Office that under the provisions of this subchapter and the law, he or she is authorized to represent the particular party in whose behalf he or she acts. In filing such a paper, the registered attorney or agent should specify his or her registration number with his or her signature. Further proof of authority to act in a representative capacity may be required.

37 C.F.R. § 1.59, Expungement of information or copy of papers in application file, sets forth, *in toto*:

(a)

(1) Information in an application will not be expunged, except as provided in paragraph (b) of this section.

(2) Information forming part of the original disclosure (i.e., written specification including the claims, drawings, and any preliminary amendment specifically incorporated into an executed oath or declaration under §§ 1.63 and 1.175) will not be expunged from the application file.

(b) An applicant may request that the Office expunge information, other than what is excluded by paragraph (a)(2) of this section, by filing a petition under this paragraph. Any petition to expunge information from an application must include the fee set forth in § 1.17(h) and establish to the satisfaction of the Director that the expungement of the information is appropriate in which case a notice granting the petition for expungement will be provided.

(c) Upon request by an applicant and payment of the fee specified in § 1.19(b), the Office will furnish copies of an application, unless the application has been disposed of (see §§ 1.53(e), (f) and (g)). The Office cannot provide or certify copies of an application that has been disposed of.

[48 FR 2710, Jan. 20, 1983, effective Feb. 27, 1983; 49 FR 554, Jan. 4, 1984, effective Apr. 1, 1984; 49 FR 48416, Dec. 12, 1984, effective Feb. 11, 1985; 50 FR 23123, May 31, 1985, effective Feb. 11, 1985; revised, 60 FR 20195, Apr. 25, 1995, effective June 8, 1995; revised, 62 FR 53131, Oct. 10, 1997, effective Dec. 1, 1997; para. (b) revised, 65 FR 54604, Sept. 8, 2000, effective Nov. 7, 2000; para. (b) revised, 68 FR 14332, Mar. 25, 2003, effective May 1, 2003; revised, 68 FR 38611, June 30, 2003, effective July 30, 2003]

37 C.F.R. § 1.316, Application abandoned for failure to pay issue fee, sets forth, *in toto*:

If the issue fee is not paid within three months from the date of the notice of allowance, the application will be regarded as abandoned. Such an abandoned application will not be considered as pending before the Patent and Trademark Office.

[47 FR 41280, Sept. 17, 1982, effective date Oct. 1, 1982; paras. (b)-(d) amended, paras. (e) and (f) added, 58 FR 44277, Aug. 20, 1993, effective Sept. 20, 1993; para. (d) revised, 60 FR 20195, Apr. 25, 1995, effective June 8, 1995; revised, 62 FR 53131, Oct. 10, 1997, effective Dec. 1, 1997]

MPP 402.05, Revocation, sets forth, in part

Revocation of the power of attorney becomes effective on the date that the revocation is RECEIVED in the Office (not on the date of ACCEPTANCE).

MPEP 405, Attorney Not of Record, sets forth, in part:

Papers may be filed in patent applications by registered attorneys or agents not of record under 37 CFR 1.34(a). Filing of such papers is considered to be a representation that the attorney or agent is authorized to act in a representative capacity on behalf of applicant. However, interviews with a registered attorney or agent not of record will be conducted based only on the information and files supplied by the attorney or agent in view of 35 U.S.C. 122. Powers of attorney may not be signed by an attorney or agent not of record.

Application of the standard to the current facts and circumstances

Petitioner has requested that the Office expunge the amendment of September 2, 2004 from the record, expunge the Notice of Allowance and Issue Fee Due, and enter the amendment of September 30, 2004.

Regarding the expungement, no matter will be expunged without the filing of a petition under 37 C.F.R. §1.59.

Regarding the entry of the amendment of September 30, 2004, the amendment will not be entered. Petitioner should note that 37 C.F.R. §1.34(a) and MPEP 405 required both the entry of the amendment of September 2, 2004 and the consideration of this amendment by the Examiner.

Petitioner filed a Power of Attorney Revocation and the Change of Correspondence Address, and the Office failed to timely enter the information contained therein. As such, the Notice of Allowance and Issue Fee due was mailed to the wrong address. For that reason, the entire period of delay has been deemed to have been unavoidable.

However, the entry of the amendment of September 2, 2004, and the consideration of the same which resulted in the mailing of a Notice of Allowance and Issue Fee Due was not improper. Pursuant to 37 C.F.R. §1.34(a) and MPEP 405, reproduced above, the Office properly accepted the amendment of September 2, 2004 since it came from a registered attorney. Therefore, even if the Power of Attorney Revocation and the Change of Correspondence Address had been entered and made of record prior to the receipt of the amendment of September 2, 2004 – the amendment would have been entered and considered, and the Notice of Allowance and Issue Fee Due would have been mailed.

Conclusion

In summary, the petition under 37 C.F.R. §1.137(a) is **GRANTED**. The Technology Center will be notified of this decision, and the Notice of Allowance and Issue Fee Due will be re-mailed to the law firm of Schneck & Schneck.

The amendment of September 30, 2004 will not be expunged from the record.

The Notice of Allowance and Issue Fee Due will not be expunged from the record.

The amendment of September 30, 2004 will not be entered.

Telephone inquiries regarding *this decision* should be directed to the undersigned at (571) 272-3225. All other inquiries concerning examination procedures or status of the application should be directed to the Technology Center.

Paul Shanoski
Senior Attorney
Office of Petitions
United States Patent and Trademark Office

UNITED STATES PATENT AND TRADEMARK OFFICE

COMMISSIONER FOR PATENTS
UNITED STATES PATENT AND TRADEMARK OFFICE
WASHINGTON, D.C. 20231
www.uspto.gov

JOHN STARKEY
27809 APPLE ROAD
WATERFORD

In re Application of
Manteufel, et al.
Application No. 10/159,469
Filed: May 31, 2002
Attorney Docket No. SP-115CIP
For: TAPE FOR USE WITH HIGH-SPEED
WEBS AND METHOD OF USE THEREOF

LETTER

COPY MAILED
FEB 10 2003
OFFICE OF PETITIONS

Dear Sir:

You are named as an inventor in the above-identified United States patent application filed under the provisions of 35 U.S.C. 116 (United States Code) and 37 C.F.R. § 1.47(a), Rules of Practice in Patent Cases. Should a patent be granted on the application you will be designated therein as a joint inventor.

As a named inventor you are entitled to inspect any paper in the file wrapper of the application, order copies of all or any part thereof (at a prepaid cost as per 37 C.F.R. § 1.19) or make your position of record in the application. Alternatively, you may arrange to do any of the preceding through a registered patent attorney or agent presenting written authorization from you. If you care to join the application, counsel of record (see below) would presumably assist you. Joining in the application would entail the filing of an appropriate oath or declaration by you pursuant to 37 C.F.R. § 1.63.

Telephone inquiries regarding this communication should be directed to the undersigned at (703) 305-0310. Requests for information regarding your application should be directed to the File Information Unit at (703) 308-2733. Information regarding how to pay for and order a copy of the application, or a specific paper in the application, should be directed to Certification Division at (703) 308-9726 or 1-800-972-6382 (outside the Washington D.C. area).

Alesia M. Brown
Petitions Attorney
Office of Petitions
Office of the Deputy Commissioner
for Patent Examination Policy

UNITED STATES PATENT AND TRADEMARK OFFICE

COMMISSIONER FOR PATENTS
UNITED STATES PATENT AND TRADEMARK OFFICE
WASHINGTON, D.C. 20231
www.uspto.gov

Paper No. 4

COPY MAILED

FEB 10 2003

OFFICE OF PETITIONS

JANSSON, SHUPE & MUNGER, LTD
245 MAIN STREET
RACINE, WI 53403

In re Application of
Manteufel, et al.
Application No. 10/159,469
Filed: May 31, 2002
Attorney Docket No. SP-115CIP
For: TAPE FOR USE WITH HIGH-SPEED
WEBS AND METHOD OF USE THEREOF

DECISION GRANTING
PETITION UNDER 37 CFR
1.47(a)

This is in response to the petition under 37 CFR 1.47(a), filed September 5, 2002.

The petition is **GRANTED**.

Petitioner has shown that inventor John Starkey has refused to join in the filing of the above-identified application after having been presented with the application papers.

The above-identified application and papers have been reviewed and found in compliance with 37 CFR 1.47(a). This application is hereby accorded Rule 1.47(a) status.

As provided in Rule 1.47(c), this Office will forward notice of this application's filing to the non-signing inventor at the address given in the petition. Notice of the filing of this application will also be published in the Official Gazette.

The required surcharge of $65.00 as been charged to Deposit Account No. 10-0270 as authorized in the instant petition.

After this decision is mailed, the above-identified application will be returned to the Office of Initial Patent Examination for further processing.

Telephone inquiries related to this decision may be directed to the undersigned at (703) 305-0310.

Alesia M. Brown
Petitions Attorney
Office of Petitions
Office of the Deputy Commissioner
for Patent Examination Policy

UNITED STATES PATENT AND TRADEMARK OFFICE

Commissioner for Patents
United States Patent and Trademark Office
P.O. Box 1450
Alexandria, VA 22313-1450
www.uspto.gov
DIW Oct-06

CHA & REITER, LLC
210 ROUTE 4 EAST STE 103
PARAMUS NJ 07652

COPY MAILED

OCT 0 3 2006

OFFICE OF PETITIONS

In re Application of :
Shi-Chang Joong :
Application No. 10/159,472 :
Filed: 31 May, 2002 :
Attorney Docket No. 5002-1-001 :

DECISION ON PETITION TO WITHDRAW HOLDING OF ABANDONMENT

This is a decision on the petition filed on 31 July, 2006, to withdraw the holding of abandonment in the above-identified application.

The petition is **GRANTED**.

The application was held abandoned for failure to timely respond to the non-final Office action mailed on 24 June, 2005, which set a three (3) month shortened statutory period for reply. The filing of this petition precedes the mailing of Notice of Abandonment.

Petitioner asserts that the non-final Office action mailed on 24 June, 2005, was not received because it was not mailed to petitioner's current correspondence address. Specifically, petitioner filed a Request for Customer Number Data Change, however the address for this application was not changed in accordance with the request. In support, petitioner has supplied a copy of the Request along with a postcard showing receipt thereof in the USPTO on 3 February, 2004. Additionally, a review of Office Customer Number Records reveals that the Customer Number is associated with the desired address.

It is noted that the Revocation and Power of Attorney filed on 1 October, 2002, in the instant application directs all correspondence to be sent to: Customer No. 33942, Steven Cha, Esq., Cha & Reiter, 411 Hackensack Avenue, 9th Floor, Hackensack, New Jersey 07601. A review of Office PALM records indicates that petitioner's typed correspondence address was entered, but that the Customer Number was not entered in the correspondence address data. The Office action mailed on 24 June, 2005, was mailed to the above-referenced street address.

MPEP 601.03 states, in pertinent part:

> If more than one correspondence address is specified in a single document, the Office will establish one as the correspondence address and will use the address associated with a Customer Number, if given, over a typed correspondence address.

As such, the showing of record is that the Office action mailed on 24 June, 2005, was mailed to an old correspondence address because the Office erred in not entering the Customer Number as the correspondence address on the Power of Attorney.

As such, the Office action mailed on 24 June, 2005, was not mailed to the correct address due to an Office error.

Additionally, petitioner has submitted a copy of the docket record where the non-received Office action would have been entered had it been received and docketed must be attached to and referenced in practitioner's statement. See "Withdrawing the Holding of Abandonment When Office Actions Are Not Received" 1156 Official Gazette 53 (November 16, 1993) and M.P.E.P. § 711.03(c).

As such, there was an irregularity in the mailing of the Office action mailed on 24 June, 2005.

The Office apologizes for any inconvenience to petitioner.

The correspondence address has been corrected in Office records.

Accordingly, any Notice of Abandonment is hereby vacated and the holding of abandonment withdrawn.

The application file is being referred to Technology Center 2600 technical support staff for remailing of the Office action mailed on 24 June, 2005. The period for reply will be reset from the mailing date thereof.

Telephone inquiries concerning this matter may be directed to the undersigned at (571)272-3231.

DWood

Douglas I. Wood
Senior Petitions Attorney
Office of Petitions

UNITED STATES PATENT AND TRADEMARK OFFICE

Commissioner for Patents
United States Patent and Trademark Office
P.O. Box 1450
Alexandria, VA 22313-1450
www.uspto.gov

JONES DAY
555 WEST FIFTH STREET
SUITE 4600
LOS ANGELES, CA 90013-1025

COPY MAILED

NOV 03 2004

OFFICE OF PETITIONS

ON PETITION

In re Application of	:	
Yi Taolin	:	
Application No. 10/159,473	:	
Filed: May 31, 2002	:	
Attorney Docket No. 082988-100011	:	

This is a decision on the petition under 37 CFR 1.137(b), filed October 22, 2004, to revive the above-identified application.

The petition is **GRANTED**.

The above-identified application became abandoned for failure to reply in a timely manner to the non-final Office action mailed March 18, 2004, which set a shortened statutory period for reply of three (3) months. No extensions of time under the provisions of 37 CFR 1.136(a) were obtained. Accordingly, the above-identified application became abandoned on June 19, 2004.

The Power of Attorney & Revocation of Prior Powers by Assignee has been entered and made of record.

Telephone inquiries concerning this decision should be directed to Wan Laymon at (571) 272-3220.

This matter is being referred to Technology Center AU 1646.

Wan Laymon
Petitions Examiner
Office of Petitions
Office of the Deputy Commissioner
for Patent Examination Policy

Attachment: Notice Regarding Change of Power of Attorney
Notice of Acceptance of Power of Attorney

UNITED STATES PATENT AND TRADEMARK OFFICE

Commissioner for Patents
United States Patent and Trademark Office
P.O. Box 1450
Alexandria, VA 22313-1450
www.uspto.gov

MORGAN LEWIS & BOCKIUS LLP
1111 PENNSYLVANIA AVENUE NW
WASHINGTON, DC 20004

MAILED

APR 2 6 2010

OFFICE OF PETITIONS

In re Application of :
Yi TAOLIN :
Application No. 10/159,473 :
Filed: May 31, 2002 :
Attorney Docket No. **065031-5002-US** :

DECISION ON PETITION
UNDER 37 CFR 1.137(b)

This is a decision on the petition under the unintentional provisions of 37 CFR 1.137(b), filed February 26, 2010, to revive the above-identified application.

The petition is **GRANTED**.

This application became abandoned for failure to timely pay the issue and publication fees on or before January 30, 2009, as required by the Notice of Allowance and Fee(s) Due, mailed October 20, 2008. Accordingly, the date of abandonment of this application is January 31, 2009.

The petition satisfies the requirements of 37 CFR 1.137(b) in that petitioner has supplied (1) the reply in the form of payment of the issue fee of $755 and the publication fee of $300, (2) the petition fee of $810; and (3) an adequate statement of unintentional delay.

It is not apparent whether the person signing the statement of unintentional delay was in a position to have firsthand or direct knowledge of the facts and circumstances of the delay at issue. Nevertheless, such statement is being treated as having been made as the result of a reasonable inquiry into the facts and circumstances of such delay. See 37 CFR 10.18(b) and Changes to Patent Practice and Procedure; Final Rule Notice, 62 Fed. Reg. 53131, 53178 (October 10, 1997), 1203 Off. Gaz. Pat. Office 63, 103 (October 21, 1997). In the event that such an inquiry has not been made, petitioner must make such an inquiry. If such inquiry results in the discovery that it is not correct that the entire delay in filing the required reply from the due date for the reply until the filing of a grantable petition pursuant to 37 CFR 1.137(b) was unintentional, petitioner must notify the Office.

There is no indication that the person signing the petition was ever given a power of attorney to prosecute the application. If the person signing the petition desires to

receive future correspondence regarding this application, the appropriate power of attorney document must be submitted. While a courtesy copy of this decision is being mailed to the person signing the petition, all future correspondence will be directed to the address currently of record until appropriate instructions are received.

Telephone inquiries concerning this decision should be directed to Monica A. Graves at (571) 272-7253.

This application is being referred to the Office of Data Management for processing into a patent.

Thurman K. Page
Petitions Examiner
Office of Petitions

cc: **RICHARD A. SUTKUS**
1300 EAST NINTH STREET, SUITE 1700
CLEVELAND, OH 44114

UNITED STATES PATENT AND TRADEMARK OFFICE

Commissioner for Patents
United States Patent and Trademark Office
P.O. Box 1450
Alexandria, VA 22313-1450
www.uspto.gov

SCULLY SCOTT MURPHY & PRESSER, PC
400 GARDEN CITY PLAZA
SUITE 300
GARDEN CITY NY 11530

COPY MAILED

MAR 0 2 2005

OFFICE OF PETITIONS

In re Application of
Hiroshi Sakai et al :
Application No. 10/159,474 :
Filed: May 31, 2002 :
Attorney Docket No. 15578 :

ON PETITION

This is a decision on the petition filed February 25, 2005, requesting withdrawal of the above-identified application from issue after payment of the issue fee.

The petition is **DISMISSED as moot.**

The instant petition was received in the USPTO on February 25, 2005. The patent issued on February 22, 2005. The petition did not reach the appropriate official for decision within sufficient time to avert issuance of the application into a patent. Petitioner's attention is directed to 37 CFR 1.313(d), which states:

> A petition under this section will not be effective to withdraw the application from issue unless it is actually received and granted by the appropriate officials **before the date of issue.** Withdrawal of an application from issue after payment of the issue fee may not be effective to avoid publication of application information.

Telephone inquiries should be directed to the undersigned at (571) 272-3208.

This matter is being referred to Files Repository.

Karen Creasy

Karen Creasy
Petitions Examiner
Office of Petitions
Office of the Deputy Commissioner
for Patent Examination Policy

UNITED STATES PATENT AND TRADEMARK OFFICE

COMMISSIONER FOR PATENTS
UNITED STATES PATENT AND TRADEMARK OFFICE
WASHINGTON, D.C. 20231
www.uspto.gov

Paper No. 10

DORSEY & WHITNEY, LLP
INTELLECTUAL PROPERTY DEPARTMENT
370 SEVENTEENTH STREET
SUITE 4700
DENVER, CO 80202-5647

COPY MAILED

MAR 2 8 2003

OFFICE OF PETITIONS

In re Application of
Ian Lloyd, Chris Brammer, Joel Horn, Theron Rubley and Rhonda Bower
Application No.10/159,477
Filed: May 30, 2002
Attorney Docket No. 11037.02
Title of Invention: APPARATUS AND METHOD FOR FOCUSED PRESENTATIONS OF STATIC AND DYNAMIC DATA USING LOCAL STORAGE MEDIA AND NETWORKED WEB PAGES

DECISION GRANTING STATUS UNDER 37 CFR 1.47(a)

This is in response to the petition under 37 CFR 1.47(a), filed December 20, 2002 and supplemented on March 26, 2002.

The petition is GRANTED.

Petitioner has shown that non-signing inventors Chris Brammer and Rhonda Bower refused to join in the filing of the above-identified application after having been presented with the application papers. Specifically, the declaration of Gregory P. Durbin attest a copy of the application papers were mailed to inventors Brammer and Bower. Phone calls to both inventors confirmed receipt of the application papers. Inventor Brammer informed petitioner he did not intend to execute the application papers. Inventor Bower's failure to respond to the application papers sufficiently establishes she refuse to execute the application papers.

The above-identified application and papers have been reviewed and found in compliance with 37 CFR 1.47(a). This application is hereby accorded Rule 1.47(a) status.

As provided in Rule 1.47(c), this Office will forward notice of this application's filing to the non-signing inventor at the address given in the petition. Notice of the filing of this application will also be published in the Official Gazette.

Deposit account 04-1415 has been credited with $65.00 because petitioner has submitted a duplicate payment for the late oath/declaration surcharge.

This application is being forwarded to the Office of Initial Patent Examination.

Telephone inquiries related to this decision may be directed to the undersigned at (703) 306-0251.

Charlema R. Grant

Charlema R. Grant
Petitions Attorney
Office of Petitions

DORSEY & WHITNEY LLP

MINNEAPOLIS
SEATTLE
NEW YORK
WASHINGTON, D.C.
DENVER
LONDON
SAN FRANCISCO
ANCHORAGE
DES MOINES
SALT LAKE CITY
FARGO

REPUBLIC PLAZA BUILDING, SUITE 4700
370 SEVENTEENTH STREET
DENVER, COLORADO 80202-5647
TELEPHONE: (303) 629-3400
FAX: (303) 629-3450
www.dorseylaw.com

SOUTHERN CALIFORNIA
BRUSSELS
TOKYO
PALO ALTO
GREAT FALLS
TORONTO
HONG KONG
MISSOULA
SHANGHAI
VANCOUVER

FAX COVER SHEET

The information contained in this facsimile message, if a client of this firm is a named addressee, or the message is otherwise intended for a client, is presumptively legally privileged and confidential information. If you are not a named addressee, or if there is any reason to believe that you may have received this message in error, (1) do not read the message below; (2) do not distribute or copy this facsimile; and (3) please immediately call us collect at the number of the sender below.

DATE: **March 26, 2003** TOTAL # OF PAGES (INCLUDING THIS COVER SHEET): **5**

TO: **Charlema Grant, Attorney, Petitions** FAX #: **703-308-6916**

FIRM NAME: **United States Patent and Trademark Office** TELEPHONE #: **703-306-0251**

FROM: **Gregory P. Durbin** FAX #: **(303) 629-3450**

TELEPHONE #: **(303) 629-3427** EMAIL: **durbin.greg@dorseylaw.com**

COMMENTS:

Re: Attorney Docket No. 11037.02

In re Application of Ian Lloyd et al.

Appn. No.: 10/159,477; Group Art Unit: 2152

Filed: May 30, 2002; For: APPARATUS AND METHOD FOR FOCUSED PRESENTATIONS OF STATIC AND DYNAMIC DATA USING LOCAL STORAGE MEDIA AND NETWORKED WEB PAGES

Attached is the Declaration For Patent Application we discussed by phone today.

Gregory P. Durbin, Atty. Reg. No. 42,503

Originator's Signature

Original will be sent via: ☐ Mail ☐ Messenger ☐ Air Courier ☒ Will not be sent

PLEASE CONTACT GREGORY P. DURBIN AT (303) 629-3427 IF THIS TRANSMISSION IS INCOMPLETE OR CANNOT BE READ.

Reference# 3048/459840-2

UNITED STATES PATENT AND TRADEMARK OFFICE

Commissioner for Patents
United States Patent and Trademark Office
P.O. Box 1450
Alexandria, VA 22313-1450
www.uspto.gov

NIXON PEABODY, LLP
401 9TH STREET, NW
SUITE 900
WASHINGTON DC 20004-2128

COPY MAILED

SEP 2 0 2007

OFFICE OF PETITIONS

In re Application of	:	
Mok et al.	:	
Application No. 10/159489	:	
Filing or 371(c) Date: 05/31/2002	:	ON PETITION
Attorney Docket Number:	:	
038975-001000	:	

This is a decision on the "Petition Under 37 C.F.R. § 1.183 and 37 C.F.R. § 1.59," filed July 24, 2007, requesting removal from public view and expungement of the Amendment, including Exhibits, filed July 23, 2007.

The Petition under 37 C.F.R. § 1.59 is hereby **dismissed.**

Any further petition to revive the above-identified application must be submitted within TWO (2) MONTHS from the mail date of this decision. Extensions of time under 37 CFR 1.136(a) are permitted. The reconsideration request should include a cover letter entitled "Request for Reconsideration of Petition under [insert the applicable code section]". This is **not** final agency action within the meaning of 5 U.S.C. § 704.

Petitioner/Applicant files the present petition to expunge inadvertently submitted information and in support of the petition states that the amendment filed July 23, 2007 contained inadvertently submitted material. Specifically, Applicant states that the Amendment included an inadvertently submitted Exhibit A, which references a company, and was not intended for public viewing. Applicant states that Exhibit A was inadvertently included as a press releaser; however, Applicant states that Exhibit A was not a press release. Applicant files with the petition a replacement Amendment which deletes Exhibit A and related references in the remarks section.

Applicable Law, Rules and MPEP

The MPEP 724.05(II), Information Unintentionally Submitted in Application, provides

> A petition to expunge information unintentionally submitted in an application (other than information forming part of the original disclosure) may be filed under 37 CFR 1.59(b), provided that:

(A) the Office can effect such return prior to the issuance of any patent on the application in issue[1];
(B) it is stated that the information submitted was unintentionally submitted and the failure to obtain its return would cause irreparable harm to the party who submitted the information or to the party in interest on whose behalf the information was submitted;
(C) the information has not otherwise been made public;
(D) there is a commitment on the part of the petitioner to retain such information for the period of any patent with regard to which such information is submitted;
(E) it is established to the satisfaction of the Director that the information to be returned is not material information under 37 CFR 1.56; and
(F) the petition fee as set forth in 37 CFR 1.17(g) is included.

The present petition lacks items (B), (C), and (D). Petitioner has failed to state that the failure to obtain its return would cause irreparable harm to the party who submitted the information or to the party in interest on whose behalf the information was submitted; Petitioner has failed to state that the information has not otherwise been made public, and Petitioner has failed to commit to retain such information for the period of any patent with regard to which the information was submitted.

The petition is dismissed without prejudice. Petitioner should file a request for reconsideration of the petition and include the necessary statements.

Petitioner is advised that the fee for a petition to expunge under 37 CFR 1.59 is $200.00. See 37 CFR 1.17(g). Applicant's deposit account has been charged an additional $70.00 as provided in the Application Transmittal Form.

Further correspondence with respect to this matter should be addressed as follows:

By mail: Director for Patents
PO Box 1450
Alexandria, VA 22313-1450

By FAX: (571) 273-8300
Attn: Office of Petitions

By hand: Customer Service Window
Randolph Building
401 Dulany Street
Alexandria, VA 22314

[1] The Office does not return the documents from the physical file because it is the Office's policy not to remove papers from files that have been scanned. The image of the recorded document will be "closed" from view, but will remain in the records of the Office.

Telephone inquiries concerning this matter should be directed to the undersigned at (571) 272-3232.

Derek L. Woods
Attorney
Office of Petitions

Docket No.: 038975-001000

IN THE UNITED STATES PATENT AND TRADEMARK OFFICE

In re Patent Application of:	)	
Megan W. Mok	)	Group Art Unit: 2162
Serial No.: 10/159,489	)	Examiner: Ehichioya, Fred
Filed: May 31, 2002	)	Confirmation No.: 2848
For: PATIENT DIRECTED SYSTEM AND METHOD FOR MANAGING MEDICAL INFORMATION	)	Date: July 24, 2007

I hereby certify that this correspondence is being filed via EFS-Web with the United States Patent and Trademark Office on July 24, 2007.

NIXON PEABODY LLP

By: Helen Jackson
Helen Jackson

PETITION UNDER 37 C.F.R. § 1.183 AND 37 C.F.R. § 1.59(b)

Office of Petitions
Commissioner for Patents
P.O. Box 1450
Alexandria, VA 22313-1450

Sir:

This is to request removal from public view of the Amendment under 37 C.F.R. § 1.111 that was submitted electronically on July 23, 2007 ("the July 23 amendment") for the above-identified application. Applicant also requests that the July 23 amendment be expunged from the file wrapper. Applicant respectfully submits that the July 23 amendment contained material which was inadvertently submitted. More specifically, the July 23, 2007 submission inadvertently includes an exhibit ("Exhibit A"), references thereto, and to a company, that were incorrect and not intended for public viewing. Exhibit A was inadvertently included as a "press release." The undersigned has been informed by Applicant that Exhibit A was not a "press release", was otherwise in error, should be deleted from the response and was not intended for public view. A corrected/replacement amendment has been submitted herewith that deletes the Exhibit A and related references in the Remarks section.

Accordingly, Applicant respectfully requests that the July 23 amendment be made unavailable for public viewing in its entirety and in any form.

If a telephone conference would expedite prosecution of this application, the Examiner is invited to telephone the undersigned at (415) 984-8200.

Respectfully submitted,

James W. Drapinski
Registration No. 46,242

July 24, 2007

NIXON PEABODY LLP
Suite 900, 401 9th Street, N.W
Washington, D.C. 20004-2128
(415) 984-8200

UNITED STATES PATENT AND TRADEMARK OFFICE

COMMISSIONER FOR PATENTS
UNITED STATES PATENT AND TRADEMARK OFFICE
WASHINGTON, DC 20231
www.uspto.gov

MAIL

Paper No. 7

MAR 0 9 2004

DIRECTOR OFFICE
TECHNOLOGY CENTER 2600

SKYMOON RESEARCH & DEVELOPMENT
3045 PARK BLVD.
PALO ALTO CA 94306

In re Application of
KELLIHER
Application No. 10/159,496
Filed: May 31, 2002
For: **METHOD AND SYSTEM FOR OVERSUBSCRIBING A POOL OF MODEMS**

DECISION ON REQUEST TO WITHDRAW AS ATTORNEY

This is a decision on the Request to Withdraw as Attorney/Agent of record filed on July 7, 2003 (paper # 4).

A grantable request to withdraw as attorney/agent of record must do the following:
(1) indicate the present mailing address of the attorney(s)/agent(s) who seek(s) to withdraw, and
(2) be signed by each attorney/agent seeking to withdraw or clearly be signed on their behalf, and
(3) be *approved* at least thirty (30) days prior to the maximum extendable period for response to any outstanding Office Action, and
(4) indicate the address to which future correspondence should be mailed.

The Request to Withdraw as Attorney is **DISMISSED AS MOOT**.

Attorneys requesting withdraw are not of record due to a Revocation of Power of Attorney executed by the assignee on January 13, 2004.

All future communications from the Office will continue to be directed to the address listed above until otherwise notified by applicant. Applicant is reminded of the obligation to promptly notify the Patent and Trademark Office of any change in correspondence address to ensure receipt of all communications from the Office.

Krista Zele
Special Program Examiner
Technology Center 2600
Communications
(703) 305-4701

cc:
Elliot Furman
SKYMOON Ventures
3045 PARK BLVD.
PALO ALTO CA 94306

UNITED STATES PATENT AND TRADEMARK OFFICE

COMMISSIONER FOR PATENTS
UNITED STATES PATENT AND TRADEMARK OFFICE
P.O. BOX 1450
ALEXANDRIA, VA 22313-1450
WWW.USPTO.GOV

Paper No. 6

BEUSSE, BROWNLEE,
BOWDOIN & WOLTER, P. A.
390 NORTH ORANGE AVENUE
SUITE 2500
ORLANDO, FL 32801

COPY MAILED

SEP 04 2003

OFFICE OF PETITIONS

In re Application of
Abdel-Malek et al.
Application No. 10/159,512
Filed: May 30, 2002
Attorney Docket No.
20-LC-5021/624226-318

DECISION ON PETITION

This is a decision on the "Petition for Revival of an Application for Patent Abandoned Unintentionally Under 37 CFR 1.137(b)," filed May 12, 2003.

The petition is **GRANTED**.

The above-identified application became abandoned for failure to file a timely and proper response to the "Notice to File Corrected Application Papers," mailed July 8, 2002. This Notice set a two-month time limit for reply, with extensions of time obtainable under § 1.136(a). No extensions of time to reply to this Office action pursuant to 37 CFR 1.136(a) were obtained. Accordingly, the above-identified application became abandoned on September 9, 2002. The instant petition precedes the mailing of a Notice of Abandonment.

With the instant petition, the petitioner filed substitute drawings in response to the Notice, and met all other requirements for a grantable petition under 37 CFR § 1.137(b).

The application file is being forwarded to the Office of Initial Patent Examination for processing of the responses (substitute drawings and preliminary amendment) filed May 12, 2003.

Telephone inquiries related to this decision should be directed to the undersigned at (703) 305-0309.

Nancy Johnson

Nancy Johnson
Senior Petitions Attorney
Office of Petitions

UNITED STATES PATENT AND TRADEMARK OFFICE

Commissioner for Patents
United States Patent and Trademark Office
P.O. Box 1450
Alexandria, VA 22313-1450
www.uspto.gov

FISH & RICHARDSON, P.C.
3300 DAIN RAUSCHER PLAZA
60 SOUTH SIXTH STREET
MINNEAPOLIS MN 55402

COPY MAILED

AUG 0 2 2004

OFFICE OF PETITIONS

In re Application of :
Christine Hiller et al :
Application No. 10/159,526 :
Filed: May 31, 2002 :
Attorney Docket No. 13907-017001 :

ON PETITION

This is a decision on the petition, filed July 30, 2004, under 37 CFR 1.313(c)(2) to withdraw the above-identified application from issue after payment of the issue fee.

The petition is **GRANTED.**

The above-identified application is withdrawn from issue for consideration of a submission under 37 CFR 1.114 (request for continued examination). See 37 CFR 1.313(c)(2).

Petitioner is advised that the issue fee paid on June 7, 2004 in the above-identified application cannot be refunded. If, however, the above-identified application is again allowed, petitioner may request that it be applied towards the issue fee required by the new Notice of Allowance.[1]

Telephone inquiries should be directed to the undersigned at (703) 305-8859.

The examiner of Technology Center AU 2863 will consider the request for continued examination under 37 CFR 1.114.

Karen Creasy

Karen Creasy
Petitions Examiner
Office of Petitions
Office of the Deputy Commissioner
for Patent Examination Policy

---

[1] The request to apply the issue fee to the new Notice may be satisfied by completing and returning the new Issue Fee Transmittal Form PTOL-85(b), which includes the following language thereon: "Commissioner for Patents is requested to apply the Issue Fee and Publication Fee (if any) or re-apply any previously paid issue fee to the application identified above." Petitioner is advised that, whether a fee is indicated as being due or not, the Issue Fee Transmittal Form **must** be completed and timely submitted to avoid abandonment. Note the language in bold text on the first page of the Notice of Allowance and Fee(s) Due (PTOL-85).

UNITED STATES PATENT AND TRADEMARK OFFICE

Commissioner for Patents
United States Patent and Trademark Office
P.O. Box 1450
Alexandria, VA 22313-1450
www.uspto.gov

FISH & RICHARDSON PC
PO BOX 1022
MINNEAPOLIS MN 55440

COPY MAILED

NOV 23 2005

OFFICE OF PETITIONS

In re	:
Hiller, et al.	: DECISION REGARDING
Application No. 10/159,526	: PATENT TERM ADJUSTMENT
Filed: May 31, 2002	: AND
Patent No. 6,871,163	: NOTICE OF INTENT TO ISSUE
Issued: March 22, 2005	: CERTIFICATE OF CORRECTION

This decision is in response to the "LETTER REGARDING PATENT TERM ADJUSTMENT", filed March 24, 2005, notifying the Office of an error in Applicant's favor in the patent term adjustment.

The request is **GRANTED**.

The patent term adjustment indicated on the patent is to be corrected by issuance of a certificate of correction showing a revised Patent Term Adjustment of **two hundred five (205) days**.

On March 22, 2005, the above-identified application matured into U.S. Patent No. 6,871,163. The patent issued with a Patent Term Adjustment of two hundred forty-three (243) days. The Office determined a patent term adjustment of two hundred forty-three (243) days based on an adjustment for PTO delay of two hundred thirty-one (231) days pursuant to 35 U.S.C. 154(b)(1)(A)(i) and 37 C.F.R. § 1.703(a)(1), thirty-eight (38) days pursuant to 35 U.S.C. 154(b)(1)(A)(ii) and 37 C.F.R. § 1.703(a)(2), and ten (10) days pursuant to 35 U.S.C. 154(b)(1)(A)(iv) and 37 C.F.R. § 1.703(a)(6), reduced by applicants' delay of thirty-six (36) days under 35 U.S.C. 154(b)(2)(C)(i) and 37 C.F.R. § 1.704(b).

However, as pointed out in the application for patent term adjustment, there was an error in the determination of the PTA.

A review of the file reveals that the second Notice of Allowance was mailed on October 8, 2004, not on January 7, 2005. PTO delay was assessed as thirty-eight (38) days. However, as the Notice of Allowance was timely mailed within four months pursuant to 37 C.F.R. § 1.703(a)(2), no PTO delay should have been assessed.

In view thereof, the correct determination of patent term adjustment is **two hundred five (205) days** (241 (231+10) days of PTO delay, and 36 days of applicant delay).

Accordingly, issuance of a certificate of correction pursuant to 35 U.S.C. 254 and 37 C.F.R. § 1.322 is appropriate.

Give the basis for granting this decision, no fee is required and none has been charged. The Office thanks Patentees for their good faith and candor in bringing this matter to the attention of the Office.

The application file is being forwarded to the Certificates of Correction Branch for issuance of a certificate of correction in order to rectify the error regarding the patent term information. See 35 U.S.C. 254 and 37 C.F.R. §1.322. The certificate of correction will indicate that the term of the above-identified patent is extended or adjusted by **two hundred five (205) days,** subject to any disclaimers.

Telephone inquiries specific to this letter should be directed to Cliff Congo, Petitions Attorney, at (571)272-3207.

Karin Ferriter
Senior Legal Advisor
Office of Patent Legal Administration
Office of Deputy Commissioner
for Patent Examination Policy

Enclosure: draft Certificate of Correction