UNITED STATES PATENT AND TRADEMARK OFFICE

UNITED STATES DEPARTMENT OF COMMERCE
United States Patent and Trademark Office
Address: COMMISSIONER FOR PATENTS
P.O. Box 1450
Alexandria, Virginia 22313-1450
www.uspto.gov

APPLICATION NO.	FILING DATE	FIRST NAMED INVENTOR	ATTORNEY DOCKET NO.	CONFIRMATION NO.
10/318,711	12/14/2002	Friend K. Bechtel		9923

7590 12/22/2005

Friend K. Bechtel
15902 E. Holcomb Rd.
Mead, WA 99021

EXAMINER	
DESTA, ELIAS	

ART UNIT	PAPER NUMBER
2857	

DATE MAILED: 12/22/2005

Please find below and/or attached an Office communication concerning this application or proceeding.

UNITED STATES PATENT AND TRADEMARK OFFICE

COMMISSIONER FOR PATENTS
UNITED STATES PATENT AND TRADEMARK OFFICE
WASHINGTON, D.C. 20231
www.uspto.gov

Paper No. 20051220

Applicant : Friend K. BECHTEL et al.
Appl No.: 10/318,711
Filed: April 3, 2001

DECISION GRANTING PETITION UNDER *37 CFR 1.48*

This decision is in response to the renewed petition filed October 28, 2005 in the above-identified application. Petitioner requests that inventorship be corrected in accordance with 37 C.F.R. 1.48.

Specifically, the petition requests that Chin S. Hsu (deceased) and Timothy C. Hanshaw be added as co-inventors.

The petition complies with 37 CFR 1.48(a) in that: (1) the desired inventorship change was set forth; (2) a statement was provided from the co-inventor(s) to be added that the error occurred without deceptive intention on his or her part; (3) a declaration from each actual inventor was provided; (4) the fee set forth in 37 CFR 1.17(i) has been paid; and (5) written consent of the assignee was submitted.

The papers filed on October 28, 2005 thus fulfill the requirements set forth in 37 C.F.R. 1.48(a), and the petition is GRANTED.

Marc Hoff
Supervisory Patent Examiner, Art Unit 2857
Technology Center 2800

Friend K. Bechtel
15902 E. Holcomb Rd.
Mead , WA
99021

SPE RESPONSE FOR CERTIFICATE OF CORRECTION

Paper No.: _____

DATE : June 30, 2006

TO SPE OF : ART UNIT 2857

SUBJECT : Request for Certificate of Correction for Appl. No.: 10/318711 Patent No.:7,047,156 B1

Please respond to this request for a certificate of correction within 7 days.

Please review the requested changes/corrections as shown in the **COCIN** document(s) in the IFW application image. No new matter should be introduced, nor should the scope or meaning of the claims be changed.

Please complete the response (see below) and forward the completed response to scanning using document code **COCX**.

Elisha Evans

Certificates of Correction Branch

703-308-9390 ext. 110

Thank You For Your Assistance

The request for issuing the above-identified correction(s) is hereby:

Note your decision on the appropriate box.

- ☒ **Approved** — **All** changes apply.
- ☐ **Approved in Part** — Specify below which changes **do not** apply.
- ☐ **Denied** — State the reasons for denial below.

Comments: No new matter is introduced, nor the scope or meaning of the claims is changed by the request for correction due to typographical errors.

MARC S. HOFF
SUPERVISORY PATENT EXAMINER
TECHNOLOGY CENTER 2800

SPE 2857 **Art Unit**

UNITED STATES PATENT AND TRADEMARK OFFICE

Commissioner for Patents
United States Patent and Trademark Office
P.O. Box 1450
Alexandria, VA 22313-1450
www.uspto.gov

MAILED
FROM DIRECTORS OFFICE

APR 04 2005

TECHNOLOGY CENTER 3600

GATES & COOPER LLP
HOWARD HUGHES CENTER
6701 CENTER DRIVE WEST, SUITE 1050
LOS ANGELES CA 90045

IN RE: HANCHING G WANG, ET AL.
SERIAL NO. 10/318715 :PETITION UNDER 37 CFR 1.181
FILED: December 13, 2002 :
DOCKET # PD-01-308

FOR: METHOD AND APPARATUS FOR SOLAR TACKING MOMENTUM MAINTENANCE IN LONG-DURATION DEPLOYMENT OF A LARGE REFLECTOR

This is in response to the petition filed on February 07, 2005 for review of the Advisory Action mailed August 13, 2004

The petition is DISMISSED.

FACTS

On May 17, 2004 a Final Rejection was mailed rejecting claims under 35 USC 112 1st and 2nd paragraphs. No art rejections were made.

On July 19, 2004, applicant submitted an amendment after final in an effort to overcome the rejections under 35 USC 112.

On August 13, 2004 an Advisory action was mailed indicating that the amendments made in the amendment of July 19, 2004 introduced new issues and raised an issue of new matter.

Petitioner requests review of the Advisory Action mailed August 13, 2004 and offers reasons why the amendment submitted July 19, 2004 should be entered.

On February 7, 2005 an interview was conducted between the Supervisory Patent Examiner and the attorney of record. During that interview, agreement was reached to enter the amendment filed July 19, 2004 and forward the case to issue.

In that the matters of this petition had been resolved on the day the petition was filed, the petition is considered Moot.

The petition is **DISMISSED**.

The application is being forwarded to the examiner for disposition of this case in accordance with the Interview Summary of February 7, 2005.

Any question concerning this decision should be referred to SPE Michael Carone at 703 306-4198.

Donald Hajec
Director, TC 3600
(703) 306-4180
/mjc:

UNITED STATES PATENT and TRADEMARK OFFICE
UNDER SECRETARY OF COMMERCE FOR INTELLECTUAL PROPERTY AND
DIRECTOR OF THE UNITED STATES PATENT AND TRADEMARK OFFICE
WASHINGTON, D.C. 20231
WWW.USPTO.GOV

JUN - 4 2003

UR
PAPER NO. 5

In re Application of :
Jian Chen et al. :
Serial No. 10/318,730 :
Filed: December 13, 2002 :
For: POLYMER AND METHOD FOR USING :
THE POLYMER FOR NONCOVALENTLY :
FUNCTIONALIZING NANOTUBES :

DECISION
ON
PETITION
UNDER 708.02, VIII

This is in response to the petition filed February 17, 2003, requesting that the above-identified application be granted Special Status. The petition has been considered under Section 708.02 (VIII) of the MPEP and 37 CFR 1.102(c) (fee paid).

The petition has been found to be deficient for the following reason: Section 708.02, VIII(C) requires that a pre-examination search be made; this search should cover all areas searchable by the examiner. However, our review shows that Class 525, Subclasses 416 and 535; and Class 528 and Subclasses 86, 377, 396 and 397 should have been searched.

Accordingly, the petition is **DENIED.**

JMStone

Jacqueline M. Stone, Director
Technology Center 1700
Chemical and Materials Engineering

Dallas Office of Fulbright & Jaworski L.L.P.
2200 Ross Avenue, Suite 2800
Dallas, TX 75201-2784

UNITED STATES PATENT AND TRADEMARK OFFICE

Commissioner for Patents
United States Patent and Trademark Office
P.O. Box 1450
Alexandria, VA 22313-1450
www.uspto.gov

TUCKER, ELLIS & WEST LLP
1150 HUNTINGTON BUILDING
925 EUCLID AVENUE
CLEVELAND OH 44115-1414

COPY MAILED

JUN 2 9 2006

OFFICE OF PETITIONS

In re Application of	:	
Wang et al.	:	DECISION ON PETITION
Application No. 10/318,737	:	TO WITHDRAW
Filed: December 12, 2002	:	FROM RECORD
Attorney Docket No. 71795/24693	:	

This is a decision on the Request to Withdraw as attorney or agent of record under 37 C.F.R. § 1.36(b), filed June 24, 2005.

The request is **APPROVED**.

A grantable request to withdraw as attorney/agent of record must be signed by every attorney/agent seeking to withdraw or contain a clear indication that one attorney is signing on behalf of another/others. A request to withdraw will not be approved unless at least 30 (thirty) days would remain between the date of approval and the later of the expiration date of a time to file a response or the expiration date of the maximum time period which can be extended under 37 C.F.R. § 1.136(a).

The request was signed by John X. Garred on behalf of all attorneys of record who are associated with Customer Number 23380.

All attorneys/agents associated with Customer Number 23380 have been withdrawn. Applicants are reminded that there is no attorney of record at this time.

The request to change the correspondence of record is not acceptable as the requested correspondence address is not that of: (1) the first named inventor; or (2) the assignee of the entire interest. All future communications from the Office will continue to be directed to the first named inventor at the first below-listed address until otherwise properly notified by the applicants.

Telephone inquires concerning this decision should be directed to Petitions Examiner Liana Chase at (571) 272-3206. All other inquires concerning either the examination or status of the application should be directed to the Technology Center.

David Bucci
Petitions Examiner
Office of Petitions

Cc:

LINGHSAIO WANG
10 MINERS TRAIL
IRVINE, CA 92620

RICHARD MITCHELL
MARKS & CLERK
280 SLATER STREET, SUITE 1800
OTTAWA, ONTARIO K1P 1C2 CANADA

UNITED STATES PATENT AND TRADEMARK OFFICE

OFFICE

SERIAL NUMBER	FILING DATE	FIRST NAMED APPLICANT	ATTORNEY DOCKET NO.
10/318761	12/13/02	Steven Earl Bauer	133634/11841

MCNEES, WALLACE & NURICK
100 PINE STREET
PO BOX 1166
HARRISBURG, PA 17108-1166

EXAMINER	
BARR MICHAEL	
ART UNIT	PAPER NUMBER
1762	

DATE MAILED: 9/2/04

NOTICE OF RESCINDED ABANDONMENT

☐ **In response to your communication filed _____**

☒ **Through inadvertence, a Notice of Abandonment was mailed in the above-identified application. The Notice of Abandonment is hereby rescinded. ~~The issue fee receipt will be mailed within six weeks.~~**

For Cheryl McGinn
Manager, Publishing Division
Office of Patent Publication

UNITED STATES PATENT AND TRADEMARK OFFICE

Commissioner for Patents
United States Patent and Trademark Office
P.O. Box 1450
Alexandria, VA 22313-1450
www.uspto.gov

NE

Mailed: 1-18-06

In re application of Caddell, Jr et al. Serial No. 10/318,764 Filed: December 13, 2002 For: APPRATUS AND METHOD FOR PERFORMING WELDING AT ELEVATED TEMPERATURE	:	DECISION ON PETITION

This is a response to the REQUEST filed February 10, 2005. The request asks that the abandonment, as set forth in the Notice of Abandonment of January 25, 2005, for failure to timely file a proper reply to the Office letter mailed July 2, 2004 be withdrawn since the applicants did timely file a reply on August 2, 2004.

DECISION

The instant request has been accepted as a petition to withdraw the holding of abandonment under the provisions of 37 CFR 1.181 (no fee) - no abandonment-in-fact. A review of the evidence presented reveals that applicant's response, the paper entitled AMENDMENT, was properly filed on August 2, 2004 as evidenced by the properly completed Certificate of Mailing thereon. Accordingly, any holding of abandonment for failure to timely file a proper reply to the Office letter mailed July 2, 2004 is hereby vacated, and the application is returned to pending status.

The application shall be forwarded to the examiner for entry, processing, and consideration of the AMENDMENT originally filed August 2, 2004.

The Petition is **GRANTED**.

Jacqueline M. Stone

Jacqueline Stone, Director
Technology Center 1700
Chemical and Materials Engineering

MCNEES WALLACE & NURICK LLC
100 Pine Street
PO Box 1166
Harrisburg, PA 17108-1166

UNITED STATES PATENT AND TRADEMARK OFFICE

Commissioner for Patents
United States Patent and Trademark Office
P.O. Box 1450
Alexandria, VA 22313-1450
www.uspto.gov

caj

Mailed: 6-19-06

In re Application of : DECISION ON
James Caddell, Jr. et al. : PETITION
Serial No. 10/318,764 :
Filed: December 13, 2002
For: APPARATUS AND METHOD FOR PERFORMING WELDING AT ELEVATED TEMPERATURE

This is a decision on the PETITION UNDER 37 CFR 1.144 TO WITHDRAW THE RESTRICTION REQUIREMENT mailed July 2, 2004 and made final in the office action mailed February 27, 2006.

On July 2, 2004, a two way restriction requirement was made by the examiner. The examiner took the position that the groupings of claims were related as process and apparatus for its practice. Applicants traversed the restriction requirement in a response filed February 10, 2005. The examiner repeated the restriction requirement in an office action mailed February 27, 2006 and made the restriction requirement final. Claims 14-18 were withdrawn from consideration as being drawn to a non-elected invention.

On April 19, 2006, the instant petition under 37 CFR 1.144 was filed to formally request the withdrawal of the restriction requirement.

Applicant's request withdrawal of the restriction requirement for the following four reasons: (1) the examiner has not shown that the separate groups are distinct; (2) the inventions have not acquired separate statuses in the art; (3) the examiner has not shown that there is an undue burden of search; and (4) the examiner has not shown that the separate groups are independent.

DECISION

Sections 803 and 806.05(e) of the MPEP state:

803 Restriction — When Proper
Under the statute, the claims of an application may properly be required to be restricted to one of two or more claimed inventions only if they are able to support separate patents and they are either independent (MPEP § 802.01, § 806.06, and

§ 808.01) or distinct (MPEP § 806.05 - § 806.05(j)).
If the search and examination of all the claims in an application can be made without serious burden, the examiner must examine them on the merits, even though they include claims to independent or distinct inventions.

806.05(e) Process and Apparatus for Its Practice
Process and apparatus for its practice can be shown to be distinct inventions, if either or both of the following can be shown: (A) that the process as claimed can be practiced by another materially different apparatus or by hand; or (B) that the apparatus as claimed can be used to practice another materially different process.

In making the restriction final, the examiner states that the inventions are distinct because the apparatus as claimed can be used to perform another process. The examiner explains that the apparatus could be used in a process in which the apparatus could be used to cut or melt a polymeric film.

Petitioner requests withdrawal of the restriction requirement for the following four reasons: (1) the examiner has not shown that the separate groups are distinct; (2) the inventions have not acquired separate statuses in the art; (3) the examiner has not shown that there is an undue burden of search; and (4) the examiner has not shown that the separate groups are independent.

With respect to (1), Petitioner argues that the material differences argued by the examiner are contrary to the limitations of the device claims. It is argued that the language of claim 14 limits the apparatus to welding applications. Thus the device is for carrying out the claimed method. This argument is not persuasive. It is well settled that method limitations and/or intended use limitations do not distinguish a claimed apparatus over a prior art apparatus. The limitation that the device is for performing welding does not impart any structure to the actual apparatus but is rather an intended use limitation. Because the intended use limitations do not have any bearing on the structure claimed, the examiner has in fact drawn a distinction with the apparatus as claimed. Therefore, the original restriction is proper.

With respect to (2), Petitioner argues that there is no showing that the two inventions have acquired a separate status in the art, other than their differing patent office classification. This argument is not persuasive. The differing classification is more than an administrative convenience; it demonstrates that each invention has attained recognition in the art as a separate subject for inventive effort, and also a separate field of search.

With respect to (3), Petitioner argues that there is no undue burden placed on the patent office by examining all of the claims in one application. This argument is not persuasive. In making the restriction final, the examiner states that a search of the non-elected claims would require searches that are not required for the claims of Group I. Additionally, in the original requirement, the examiner has pointed out that each group is classified in different class and subclasses. The position of the examiner is reasonable. While a search of the two groups of claims would be overlapping, additional searching would be required for the non-elected group. Such a search would be a serious burden on the examiner in that the examiner would have to search prior art methods that would not have anything to do with the instantly claimed apparatus.

With respect to (4), Petitioner argues that the inventions have not been shown to be independent and distinct, as required by 35 U.S.C. 121. This argument is not persuasive. With reference to MPEP section 803 (cited above), restriction may be required when the inventions can be shown to be independent or distinct.

Accordingly, the restriction requirement is proper and the petition to withdraw the restriction requirement is **DENIED**.

Jacqueline M. Stone

Jacqueline M. Stone, Director
Technology Center 1700
Chemical and Materials Engineering

MCNEES WALLACE & NURICK L.L.C.
100 PINE STREET
P.O. BOX 1166
HARRISBURG, PA 17108-1166

UNITED STATES PATENT AND TRADEMARK OFFICE

Commissioner for Patents
United States Patent and Trademark Office
P.O. Box 1450
Alexandria, VA 22313-1450
www.uspto.gov
DRW Aug-08

QUALCOMM INCORPORATED
5775 MOREHOUSE DR.
SAN DIEGO CA 92121

COPY MAILED

AUG 15 2008

In re Application of :
Dyck et al. :
Application Number: 10/318778 :
Filing Date: 12/12/2002 : ON PETITION
Attorney Docket Number: 020631 :

This is a decision on the "PETITION TO WITHDRAW HOLDING OF ABANDONMENT IN ACCORDANCE WITH 37 CFR 1.181," which, in view of petitioner's statement that the abandonment of the application was unintentional and filing of the concurrent petition to revive an unintentionally-abandoned application, both filed on June 26, 2008, is treated under 37 CFR 1.137(b).[1]

The petition is **GRANTED**.

This application became abandoned on September 16, 2007, for failure to timely reply to the non-final Office action mailed on June 15, 2007, which set a three (3) month shortened statutory period for reply. No extensions of the time for reply in accordance with 37 CFR 1.136(a) were obtained. Notice of Abandonment was mailed on March 18, 2008.

---

[1] Effective December 1, 1997, the provisions of 37 CFR 1.137(b) now provide that where the delay in reply was unintentional, a petition may be filed to revive an abandoned application or a lapsed patent pursuant to 37 CFR 1.137(b). A grantable petition filed under the provisions of 37 CFR 1.137(b) must be accompanied by:

(1) the required reply, unless previously filed. In a nonprovisional application abandoned for failure to prosecute, the required reply may be met by the filing of a continuing application. In a nonprovisional application filed on or after June 8, 1995, and abandoned for failure to prosecute, the required reply may also be met by the filing of a request for continued examination in compliance with § 1.114. In an application or patent, abandoned or lapsed for failure to pay the issue fee or any portion thereof, the required reply must be the payment of the issue fee or any outstanding balance thereof. In an application abandoned for failure to pay the publication fee, the required reply must include payment of the publication fee.

(2) the petition fee as set forth in 37 CFR 1.17(m);

(3) a statement that the entire delay in filing the required reply from the due date for the reply until the filing of a grantable petition pursuant to 37 CFR 1.137(b) was unintentional. The Director may required additional information where there is a question whether the delay was unintentional; and

(4) any terminal disclaimer (and fee as set forth in 37 CFR 1.20(d)) required pursuant to 37 CFR 1.137(c)).

Receipt of an amendment filed in response to the non-final Office action is acknowledged.

The application is referred to Technology Center Art Unit 2617 for further processing.

Telephone inquiries concerning this matter may be directed to the undersigned at (571) 272-3231.

Douglas I. Wood
Senior Petitions Attorney
Office of Petitions

UNITED STATES PATENT AND TRADEMARK OFFICE

Commissioner for Patents
United States Patent and Trademark Office
P.O. Box 1450
Alexandria, VA 22313-1450
www.uspto.gov

Paper No. 7

Thomas H. Close
Patent Legal Staff
Eastman Kodak Company
343 State Street
Rochester, NY 14650-2201

COPY MAILED

JAN 3 2005

OFFICE OF PETITIONS

In re Application of
Stephen C. Meissner
Application No. 10/318,789
Filed: December 13, 2002
Attorney Docket No. 85579CEB

ON PETITION

This is a decision on the petition under 37 CFR 1.137(b), filed December 2, 2004, to revive the above-identified application.

The above-identified application became abandoned for failure to reply in a timely manner to the non-final Office action mailed May 12, 2003, which set a shortened statutory period for reply of three (3) months. No extensions of time under the provisions of 37 CFR 1.136(a) were obtained. Accordingly, the above-identified application became abandoned after midnight August 12, 2003.

In response, petitioner submitted with the instant petition an authorization to charge the petition fee to the listed deposit account, and an amendment. In view of the authorization, $1,370 for the petition to revive fee has been charged to petitioner's deposit account.

The petition is **GRANTED**.

The application file is being forwarded to Technology Center Art Unit 3723, for review of the amendment filed with the instant petition.

Telephone inquiries concerning this decision should be directed to the undersigned at (571) 272-3226.

Andrea Smith
Petitions Examiner
Office of Petitions
Office of the Deputy Commissioner
for Patent Examination Policy

UNITED STATES PATENT AND TRADEMARK OFFICE

COMMISSIONER FOR PATENTS
UNITED STATES PATENT AND TRADEMARK OFFICE
P.O. BOX 1450
ALEXANDRIA, VA 22313-1450
www.uspto.gov

HOWARD J. GREENWALD P.C.
349 W. COMMERCIAL STREET SUITE 2490
EAST ROCHESTER, NY 14445-2408

COPY MAILED

JUN 23 2006

OFFICE OF PETITIONS

In re Application of :
Patrick R. Connelly, et al. :
Application No. 10/318,799 : DECISION ON REQUEST
Filed: December 13, 2002 : TO WITHDRAW
Attorney Docket No. PRC-138 : FROM RECORD
:

This is a decision on the Request to Withdraw as attorney or agent of record under 37 CFR §1.36(b), filed September 30, 2005.

The request is **NOT APPROVED** as moot.

A review of the file record indicates that the power of attorney to Howard J. Greenwald and all the attorneys/agents of record associated with Customer No. 37282 was revoked by the assignee of the patent application on December 1, 2005. Accordingly, the request to withdraw under 37 CFR §1.36(b) is moot.

All future communications from the Office will continue to be directed to the below-listed address until otherwise notified by applicant.

There is no outstanding Office action that requires a response by applicant.

Telephone inquires concerning this decision should be directed to Sherry D. Brinkley at 571-272- 3204.

Sherry D. Brinkley
Petitions Examiner
Office of Petitions

Conferee:

cc: BUCHANAN INGERSOLL PC
(INCLUDING BURNS, DOANE, SWECKER & MATHIS)
POST OFFICE BOX 1404
ALEXANDRIA, VA 22313-1404

UNITED STATES PATENT AND TRADEMARK OFFICE

Commissioner for Patents
United States Patent and Trademark Office
P.O. Box 1450
Alexandria, VA 22313-1450
www.uspto.gov

HEWLETT-PACKARD COMPANY
INTELLECTUAL PROPERTY ADMINISTRATION
P.O. BOX 272400
FORT COLLINS, CO 80527-2400

COPY MAILED

FEB 22 2008

OFFICE OF PETITIONS

In re Application of :
Scott Alan RHINE :
Application No. 10/318,822 : DECISION ON PETITION
Filed: December 13, 2002 :
Attorney Docket No. 200205639-1 :

This is a decision on the petition under the unintentional provisions of 37 CFR 1.137(b), filed January 24, 2008, to revive the above-identified application.

The petition is **GRANTED**.

The application became abandoned for failure to timely pay the issue and publication fees on or before May 6, 2007. As required by the Notice of Allowance and Fee(s) Due, mailed February 6, 2007, which set a statutory period for reply of three (3) months. Accordingly, the application became abandoned on May 7, 2007.

The petition satisfies the requirements of 37 CFR 1.137(b) in that petitioner has supplied (1) the reply in the form of payment of the Issue Fee of $1440 and Publication Fee of $300; (2) the petition fee of $1540; and (3) the required statement of unintentional delay.

Telephone inquiries concerning this decision should be directed to Diane Goodwyn at (571) 272-6735.

The application is being referred to the Office of Patent Publication.

April Wise
Petitions Examiner
Office of Petitions

DATE 2/8/08 APPLICATION NUMBER 10/318,822

DOC CODE IFEE DOC DATE 1-24-08

DELIVER THE ATTACHED FIFLE/DOCUMENT TO THE TC SCANNING CENTER

CONTRACTOR: THE ATTACHED FILE/DOCUMENT MUST BE INDEXED AND SCANNED INTO IFW WITHIN **8** WORK HOURS; UPLOADING OF THE SCANNED IMAGES SHOULD OCCUR NO LATER THAN **16** WORK HOURS FOLLOWING RECEIPT OF THIS REQUEST

AFTER SCANNING, ORIGINAL DOCUMENTS SHOULD BE BOXED IN ACCORDANCE WITH INSTRUCTIONS

OIPE
JAN 24 2008
PATENT & TRADEMARK OFFICE

PART B - FEE(S) TRANSMITTAL

Complete and send this form, together with applicable fee(s), to: Mail Mail Stop ISSUE FEE
Commissioner for Patents
P.O. Box 1450
Alexandria, Virginia 22313-1450
or Fax (571)-273-2885

INSTRUCTIONS: This form should be used for transmitting the ISSUE FEE and PUBLICATION FEE (if required). Blocks 1 through 5 should be completed where appropriate. All further correspondence including the Patent, advance orders and notification of maintenance fees will be mailed to the current correspondence address as indicated unless corrected below or directed otherwise in Block 1, by (a) specifying a new correspondence address; and/or (b) indicating a separate "FEE ADDRESS" for maintenance fee notifications.

CURRENT CORRESPONDENCE ADDRESS (Note: Use Block 1 for any change of address)

7590 02/06/2007

HEWLETT-PACKARD COMPANY
Intellectual Property Administration
P.O. Box 272400
Fort Collins, CO 80527-2400

Note: A certificate of mailing can only be used for domestic mailings of the Fee(s) Transmittal. This certificate cannot be used for any other accompanying papers. Each additional paper, such as an assignment or formal drawing, must have its own certificate of mailing or transmission.

Certificate of Mailing or Transmission
I hereby certify that this Fee(s) Transmittal is being deposited with the United States Postal Service with sufficient postage for first class mail in an envelope addressed to the Mail Stop ISSUE FEE address above, or being facsimile transmitted to the USPTO (571) 273-2885, on the date indicated below.

Joseph A. Nguyen	(Depositor's name)
/Joseph A. Nguyen/	(Signature)
01/08/2008	(Date)

APPLICATION NO.	FILING DATE	FIRST NAMED INVENTOR	ATTORNEY DOCKET NO.	CONFIRMATION NO.
10/318,822	12/13/2002	Scott Alan Rhine	200205639-1	8961

TITLE OF INVENTION: SYSTEMS AND METHODS FOR FACILITATING FAIR AND EFFICIENT SCHEDULING OF PROCESSES AMONG MULTIPLE RESOURCES IN A COMPUTER SYSTEM

APPLN. TYPE	SMALL ENTITY	ISSUE FEE DUE	PUBLICATION FEE DUE	PREV. PAID ISSUE FEE	TOTAL FEE(S) DUE	DATE DUE
nonprovisional	NO	$1400	$300	$0	$1700	05/07/2007

EXAMINER	ART UNIT	CLASS-SUBCLASS
TRUONG, CAMQUY	2195	718-104000

1. Change of correspondence address or indication of "Fee Address" (37 CFR 1.363)
- ☐ Change of correspondence address (or Change of Correspondence Address form PTO/SB/122) attached.
- ☐ "Fee Address" indication (or "Fee Address" Indication form PTO/SB/47; Rev 03-02 or more recent) attached. **Use of a Customer Number is required.**

2. For printing on the patent front page, list
(1) the names of up to 3 registered patent attorneys or agents OR, alternatively,
(2) the name of a single firm (having as a member a registered attorney or agent) and the names of up to 2 registered patent attorneys or agents. If no name is listed, no name will be printed.
1 _____
2 _____
3 _____

3. ASSIGNEE NAME AND RESIDENCE DATA TO BE PRINTED ON THE PATENT (print or type)

PLEASE NOTE: Unless an assignee is identified below, no assignee data will appear on the patent. If an assignee is identified below, the document has been filed for recordation as set forth in 37 CFR 3.11. Completion of this form is NOT a substitute for filing an assignment.

(A) NAME OF ASSIGNEE: Hewlett-Packard Development Company, L.P.
(B) RESIDENCE: (CITY and STATE OR COUNTRY): Houston, Texas

Please check the appropriate assignee category or categories (will not be printed on the patent): ☐ Individual ☒ Corporation or other private group entity ☐ Government

4a. The following fee(s) are submitted:
- ☒ Issue Fee
- ☒ Publication Fee (No small entity discount permitted)
- ☐ Advance Order - # of Copies _____

4b. Payment of Fee(s): **(Please first reapply any previously paid issue fee shown above)**
- ☐ A check is enclosed.
- ☐ Payment by credit card. Form PTO-2038 is attached.
- ☒ The Director is hereby authorized to charge the required fee(s), any deficiency, or credit any overpayment, to Deposit Account Number 08-2025 (enclose an extra copy of this form).

5. **Change in Entity Status** (from status indicated above)
- ☐ a. Applicant claims SMALL ENTITY status. See 37 CFR 1.27.
- ☐ b. Applicant is no longer claiming SMALL ENTITY status. See 37 CFR 1.27(g)(2).

NOTE: The Issue Fee and Publication Fee (if required) will not be accepted from anyone other than the applicant; a registered attorney or agent; or the assignee or other party in interest as shown by the records of the United States Patent and Trademark Office.

Authorized Signature /Joseph A. Nguyen/Reg No 37,899 Date 01/08/2008

Typed or printed name Joseph A. Nguyen Registration No. 37,899

This collection of information is required by 37 CFR 1.311. The information is required to obtain or retain a benefit by the public which is to file (and by the USPTO to process) an application. Confidentiality is governed by 35 U.S.C. 122 and 37 CFR 1.14. This collection is estimated to take 12 minutes to complete, including gathering, preparing, and submitting the completed application form to the USPTO. Time will vary depending upon the individual case. Any comments on the amount of time you require to complete this form and/or suggestions for reducing this burden, should be sent to the Chief Information Officer, U.S. Patent and Trademark Office, U.S. Department of Commerce, P.O. Box 1450, Alexandria, Virginia 22313-1450. DO NOT SEND FEES OR COMPLETED FORMS TO THIS ADDRESS. SEND TO: Commissioner for Patents, P.O. Box 1450, Alexandria, Virginia 22313-1450.

Under the Paperwork Reduction Act of 1995, no persons are required to respond to a collection of information unless it displays a valid OMB control number.

02/22/2008 CKHLOK 00000004 082025 10318822
01 FC:1504 300.00 DA
02 FC:1501 1440.00 DA

UNITED STATES PATENT AND TRADEMARK OFFICE

COMMISSIONER FOR PATENTS
UNITED STATES PATENT AND TRADEMARK OFFICE
P.O. BOX 1450
ALEXANDRIA, VA 22313-1450
www.uspto.gov

Paper No.

KNOBLE, YOSHIDA & DUNLEAVY
EIGHT PENN CENTER
SUITE 1350
1628 JOHN F KENNEDY BLVD
PHILADELPHIA, PA 19103

COPY MAILED

SEP 26 2005

OFFICE OF PETITIONS

In re Application of	:	
Mitsumasa Takeda	:	DECISION ON APPLICATION
Application No. 10/318,840	:	FOR
Filed: December 13, 2002	:	PATENT TERM ADJUSTMENT
Atty Docket No. SUNSTAF-10	:	

This is a decision on the "APPLICATION FOR PATENT TERM ADJUSTMENT UNDER 37 CFR § 1.705(b)," filed May 16, 2005. Applicant requests that the initial determination of patent term adjustment under 35 U.S.C. 154(b) be corrected from zero (0) days to eighty-six (86) days, or in the alternative, to sixty-four (64) days.

The application for patent term adjustment is **DISMISSED**.

On April 28, 2005, the Office mailed the Determination of Patent Term Adjustment under 35 U.S.C. 154(b) in the above-identified application. The Notice stated that the patent term adjustment (PTA) to date is 0 days. On May 16, 2005, applicant timely[1] submitted the instant application for patent term adjustment. Applicant disputes the reduction pursuant to 1.704(c)(7) of 22 days, and the reduction pursuant to 1.704(c)(8) of 203 days. Applicant requests removal of the 22-day reduction on the ground that the response filed February 19, 2004 was fully responsive and that the notice of non-compliance was issued in error. Applicant requests removal of the 203-day reduction on the

[1] PALM records indicate that the Issue Fee payment was received in the Office on May 20, 2005.

ground that under the circumstances a penalty for the submission of the IDS is unjust and unreasonable.

Applicant states that the patent issuing from this application is not subject to a terminal disclaimer.

Applicant's arguments have been considered, but not found persuasive. Pursuant to 37 CFR § 1.704(c), circumstances that constitute a failure of the applicant to engage in reasonable efforts to conclude processing or examination of an application also include the following circumstances, which will result in the following reduction of the period of adjustment set forth in § 1.703 to the extent that the periods are not overlapping:

> (7) Submission of a reply having an omission (§1.135(c)), in which case the period of adjustment set forth in § 1.703 shall be reduced by the number of days, if any, beginning on the day after the date the reply having an omission was filed and ending on the date that the reply or other paper correcting the omission was filed;
>
> (8) Submission of a supplemental reply or other paper, other than a supplemental reply or other paper expressly requested by the examiner, after a reply has been filed, is a failure to engage in reasonable efforts to conclude prosecution.

The record has been reviewed and it has been determined that the response filed February 19, 2004 was properly held to be non-responsive. The Office action of January 21, 2004 included two requirements under 35 USC 121 namely:

In paragraph 1:

> Restriction to one of the following inventions is required under 35 U.S.C. 121:
>
> I. Claims 1-12, drawn to a towing device, classified in class 280, subclass 515.
>
> II. Claims 13-20, drawn to a towing tractor, classified in class 180, subclass 14.1.

and in paragraph 4:

This application contains claims directed to the following patentably distinct species of the claimed invention:

I. fig. 1
II. fig. 3
III. fig. 5
IV. fig. 7.

As stated by the examiner in the Notice mailed March 8, 2004, applicant did not elect a single invention as required in paragraphs 1-3 of the previous Office action. By omitting the term "Invention I," applicant did not restrict as required to either Invention "I" or "II." Further, as applicant elected a combination of claims under both Invention I and II, neither invention was clearly elected. As such, the election was properly considered not fully responsive. Thus, the reduction of 22 days for the delay from the filing of the initial response on February 19, 2004, to the filing of the response including a proper election on March 12, 2004, is warranted.

Likewise, the reduction of 203 days is found to be proper. After filing a response to the election requirement, on March 12, 2004, on October 1, 2004, applicant filed an Information Disclosure Statements (IDS). The record does not support a conclusion that the IDS was expressly requested by the examiner. Nor does applicant argue that it was. Furthermore, applicant acknowledges that the IDS was not accompanied by a § 1.704(d) statement. Accordingly, the reduction of 203 days falls squarely within the basis for reduction set forth in 1.704(c)(8).

Application of the rules in this instance is neither unjust nor unreasonable. The rules make clear that the only exception to entry of a reduction for filing an IDS under circumstances that otherwise constitute a failure to engage in reasonable efforts to conclude prosecution is compliance with § 1.704(d). That is, filing of the IDS within 30 days of the date each item of information contained in the information disclosure statement was first cited in any communication from a foreign patent office in a counterpart application and within 30 days of the date such communication was received by an individual designated in § 1.56(c). Just as applicant argues he could have avoided the entry of a reduction by waiting to file the IDS until after the mailing of the next Office action, applicant could have avoided the entry of a reduction by filing the IDS earlier. To

ensure that a period of reduction would not be entered for filing the IDS, applicant could have filed the IDS within the period set forth in 1.704(d) statement and included the 1.704(d) statement.

In view thereof, it is concluded that the determination of patent term adjustment at the time of the mailing of the Notice of Allowance is 0 days.

Receipt of the $200.00 fee set forth in 37 CFR 1.18(e) is acknowledged. No additional fees are required.

The Office of Patent Publication has been advised of this decision. The application is thereby forwarded to the Publishing Division for processing into a patent.

Telephone inquiries specific to this decision should be directed to Nancy Johnson, Senior Petitions Attorney, at (571) 272-3219.

Kery Fries

Kery A. Fries
Senior Legal Advisor
Office of Patent Legal Administration
Office of Deputy Commissioner
for Patent Examination Policy

UNITED STATES PATENT AND TRADEMARK OFFICE

Commissioner for Patents
United States Patent and Trademark Office
P.O. Box 1450
Alexandria, VA 22313-1450
www.uspto.gov

WOMBLE CARLYLE SANDRIDGE & RICE, PLLC
ATTN: PATENT DOCKETING 32ND FLOOR
P.O. BOX 7037
ATLANTA GA 30357-0037

COPY MAILED

MAY 12 2006

OFFICE OF PETITIONS

In re Application of :
BENCHERIF et al. : DECISION ON APPLICATION
Application No. 10/318,842 : FOR
Filed: December 13, 2002 : PATENT TERM ADJUSTMENT
Atty Docket No. T103 1490.1 :

This is a decision on the "APPLICATION FOR PATENT TERM ADJUSTMENT UNDER 37 CFR § 1.705(b)," filed January 3, 2006. Applicant requests that the initial determination of patent term adjustment under 35 U.S.C. 154(b) be corrected from forty-six (46) days to one hundred twenty-six (126) days.

The application for patent term adjustment is **GRANTED TO EXTENT INDICATED HEREIN**.

The Office has updated the PAIR screen to reflect that the correct Patent Term Adjustment (PTA) determination at the time of the mailing of the Notice of Allowance is one hundred seven **(107)** days. A copy of the updated PAIR screen, showing the correct determination, is enclosed.

On December 15, 2005, the Office mailed the Determination of Patent Term Adjustment under 35 U.S.C. 154(b) in the above-identified application. The Notice stated that the patent term adjustment (PTA) to date is 46 days. On January 3, 2006, applicant timely[1] submitted the instant application for patent term adjustment. Applicant disputes the reduction pursuant to 1.704(c)(7) of 61 days. Applicant requests removal of the 61-day reduction on the ground that the response filed July 14, 2004 was fully responsive to the requirement for

[1] PALM records indicate that the Issue Fee payment was received in the Office on March 14, 2006.

restriction/election of species and that the notice that the reply was not fully responsive was issued in error. Applicant requests, in addition, an adjustment of 19 days under 37 CFR 1.703(a)(2) due to the Office's delay in subsequently mailing an action under 35 U.S.C. 132 more than four months after the July 14, 2004 reply was filed.

The record supports a conclusion that the patent issuing from this application is not subject to a terminal disclaimer.

Pursuant to 37 CFR § 1.704(c), circumstances that constitute a failure of the applicant to engage in reasonable efforts to conclude processing or examination of an application also include the following circumstances, which will result in the following reduction of the period of adjustment set forth in § 1.703 to the extent that the periods are not overlapping:

> (7) Submission of a reply having an omission (§1.135(c)), in which case the period of adjustment set forth in § 1.703 shall be reduced by the number of days, if any, beginning on the day after the date the reply having an omission was filed and ending on the date that the reply or other paper correcting the omission was filed[.]

Pursuant to 1.704(c)(7), the filing of a reply or other paper correcting an omission in a paper filed within the three-month period for reply to an Office action or Notice is a proper basis for entry of a period of reduction. The prosecution history has been carefully reviewed, and under the circumstances, it is concluded that the filing of a supplemental reply on September 13, 2004 will not be considered a failure to engage in reasonable efforts to conclude prosecution. The reduction of 61 days will be removed.

Applicants are advised that in the future such reductions may not be removed where applicants have made an election (or submitted a reply) containing an omission because they failed to clarify any relevant discrepancies in the requirement or other Office action (e.g., requirement includes an election of species to a non-existent group).

However, the prosecution history indicates that Applicants did not inquire or request clarification of the discrepancy in the original requirement between the time when the original requirement was mailed (6/16/04) and the filing of the original

election (7/14/04). The mailing of the notice on August 27, 2004 was necessary in order to continue prosecution with respect to the requirement for restriction/election of species. As such, any calculation for the period of adjustment of the patent term due to examination delay of the above-identified application as set forth in 37 CFR 1.703(a)(2) will be calculated from the date the reply of September 13, 2004 was received. The date of mailing an action under 35 U.S.C. 132 was December 3, 2004, less than four months after the date a reply under 37 CFR 1.111 was filed. No period of adjustment shall be granted.

In view thereof, it is concluded that the determination of patent term adjustment at the time of the mailing of the Notice of Allowance is 107 days.

Receipt of the $200.00 fee set forth in 37 CFR 1.18(e) is acknowledged. No additional fees are required.

The Office of Patent Publication has been advised of this decision. The application is thereby forwarded to the Publishing Division for processing into a patent.

Telephone inquiries specific to this decision should be directed to Denise Pothier at (571) 272-4787.

Nancy Johnson
Senior Petitions Attorney
Office of Petitions

Enclosure: Copy of REVISED PAIR Screen

UNITED STATES PATENT AND TRADEMARK OFFICE

COMMISSIONER FOR PATENTS
UNITED STATES PATENT AND TRADEMARK OFFICE
P.O. BOX 1450
ALEXANDRIA, VA 22313-1450
www.uspto.gov

Paper No. 121703

William L. Shaffer
TOWNSEND AND TOWNSEND AND CREW, LLP
Two Embarcadero Center, 8th Floor
San Francisco, CA 94111-3834

DEC 19 2003

In re Application of:
PANGELLY *et al.*
Serial No.: 10/318,849
Filed: December 13, 2002
Attorney Docket No.: **CREEP033/P0273**

DECISION ON REQUEST TO WITHDRAW FROM RECORD

This is a decision on the request to withdraw as attorney of record under 37 C.F.R. § 1.36, filed March 24, 2003.

The request is **DISMISSED** as moot.

A review of the application file record reveals a proper revocation and power of attorney, to the attorneys associated with Customer No. 22434, was filed on May 06, 2003. As such, the power of attorney for the attorneys and agents requesting withdrawal has already been revoked. Accordingly, the present request is moot, and must be dismissed.

All future communications form the Office will continue to be directed to the below-listed address until otherwise notified by applicant.

Inquiries related to this decision should be directed to Clayton E. LaBalle at (703) 308-0519.

Clayton E. LaBalle, Special Programs Examiner
Technology Center 2800
Semiconductors, Electrical and Optical
Systems and Components

cc: Henry K. Woodward
Beyer Weaver & Thomas, LLP, Intellectual Property Law
590 West El Camino Real
Mountain View, CA 94040

UNITED STATES PATENT AND TRADEMARK OFFICE

COMMISSIONER FOR PATENTS
UNITED STATES PATENT AND TRADEMARK OFFICE
P.O. BOX 1450
ALEXANDRIA, VA 22313-1450
www.uspto.gov

FOLEY HOAG, LLP/WYETH
PATENT GROUP, (w/WYS)
155 SEAPORT BLVD.
BOSTON MA 02210-2600

MAILED

MAR 16 2009

OFFICE OF PETITIONS

In re Application :
Ling, et al. :
Application No. 10/318,855 : PATENT TERM ADJUSTMENT
Filed: December 12, 2002 :
Dkt. No.: WYS-010.02 :

This is a decision on the "REQUEST FOR RECONSIDERATION OF PATENT TERM ADJUSTMENT," filed October 15, 2008. This matter is being properly treated as an application for patent term adjustment pursuant to 37 CFR 1.705(b).

The application for patent term adjustment (PTA) under 37 CFR 1.705(b) is **GRANTED IN PART and HELD IN ABEYANCE IN PART**.

The Determination of Patent Term Adjustment under 35 U.S.C. 154(b), mailed July 15, 2008, indicated a patent term adjustment (PTA) to date of zero days. The instant application for PTA was timely filed October 15, 2008, at the time of submission of the issue fee payment. Applicants argue that the application is entitled to an adjustment of either 445 days, 405 days, 71 days, or 31 days. Applicants further argue that the application is entitled to adjustment pursuant to 37 CFR 1.702(b).

Applicants contest the adjustment of 386 days in connection with the mailing of the restriction requirement on March 4, 2005. Applicants argue that the proper adjustment in this regard is 426 days based on the fact that the restriction requirement was re-mailed on April 13, 2005. Applicants further dispute the reduction of 135 days in connection with the reply to the restriction requirement filed October 17, 2005. Applicants argue that the correct reduction in this regard is 96 days.

The correct PTA at the time of the allowance is 71 days, as discussed herein.

A review of the record reveals that a restriction requirement was mailed March 4, 2005, without mailing to the proper address of filing & mailed with address that was illegible. The restriction requirement was re-mailed April 13, 2005. The re-mailed restriction requirement set

a new period of time for reply. In view thereof, the application is entitled to an adjustment of 426 days, as argued by applicants, in accordance with 37 CFR 1.702(a)(1). The adjustment commenced February 13, 2004, the day after the date that is 14 months after the date that the application was filed, and ended April 13, 2005, the date that the restriction requirement was re-mailed.

A reply to the restriction requirement was filed October 17, 2005. In accordance with 37 CFR 1.704(b), the adjustment is reduced 96 days. The reduction commenced July 14, 2005, the day after the date that is three months after the date that the restriction requirement was re-mailed, and ended October 17, 2005, the date that a reply was filed.

As uncontested by applicants, the adjustment is reduced 27 days in accordance with 37 CFR 1.704(b) in connection with the filing of the amendment April 26, 2006.

As uncontested by applicants, the adjustment is reduced 86 days in accordance with 37 CFR 1.704(b) in connection with the filing of an RCE on December 21, 2006.

As uncontested by applicants, the adjustment is further reduced 92 days in accordance with 37 CFR 1.704(b) in connection with the reply to the non-final Office action filed September 14, 2007.

As uncontested by applicants, the adjustment is reduced 72 days in accordance with 37 CFR 1.704(c)(8) in connection with the IDS filed May 9, 2008.

As uncontested by applicants, the application is entitled to an additional adjustment of 18 days in accordance with 37 CFR 1.702(a)(2) in connection with the mailing of the Notice of Allowance on July 15, 2008.

In view thereof, at the time of allowance, the application was entitled to an adjustment of 71 days (adjustments totalling 444 days less reductions totalling 373 days).

In view of the Court's holding in *Wyeth v. Dudas*, No. 07-1492 (D.D.C. Sept. 30, 2007), the instant application for patent term adjustment also requests reconsideration of the patent term adjustment as it relates to the Office's failure to issue the patent within three years of the filing date of the application. A decision is being **held in abeyance** until after the actual

patent date. Knowledge of the actual date the patent issues is required to calculate the amount, if any, of additional patent term for Office failure to issue the patent within three years. *See*, 37 CFR 1.703(b).

Applicants are given **TWO (2) MONTHS** from the issue date of the patent to file a written request for reconsideration of the patent term adjustment for Office failure to issue the patent within three years. A copy of this decision should accompany the request. Applicants may seek such consideration without payment of an additional fee. However, as to all other bases for seeking reconsideration of the patent term adjustment indicated in the patent, all requirements of 37 CFR 1.705(d) must be met. Requests for reconsideration on other bases must be timely filed and must include payment of the required fee.

With respect to the over 3 year calculation, rather than file the request for reconsideration of Patent Term Adjustment at the time of the mailing of the notice of allowance, applicants are advised that they may wait until the time of the issuance of the patent and file a request for reconsideration of the patent term pursuant to 37 CFR 1.705(d). The USPTO notes that it does not calculate the amount of time earned pursuant to 37 CFR 1.702(b) until the time of the issuance of the patent and accordingly, the Office will consider any request for reconsideration of the patent term adjustment due to an error in the calculation of 37 CFR 1.702(b) to be timely if the request for reconsideration is filed within two months of the issuance of the patent.

Applicants are further advised that the patent term adjustment indicated in the patent will include any additional patent term accrued pursuant to §§ 1.702(a)(4) and 1.702(b).

The Office acknowledges receipt of the required application fee of $200.00. No additional fee will be required if applicants are solely requesting reconsideration of additional time related to failing to issue the patent within three years in accordance with 37 CFR 1.702(b).

The application file is being forwarded to the Office of Data Management for issuance of the patent. The patent term adjustment indicated on the patent (as shown on the Issue Notification mailed about three weeks prior to patent issuance) will include any additional adjustment accrued both for Office delay in issuing the patent more than four months after payment of the issue fee and satisfaction of all outstanding requirements, and for the Office taking in excess of three years

to issue the patent (to the extent that the three-year period does not overlap with periods already accorded).

Telephone inquiries specific to this matter should be directed to Petitions Attorney Alesia M. Brown at (571) 272-3205.

Kery A. Fries

Kery Fries
Senior Legal Advisor
Office of Patent Legal Administration
Office of Deputy Commissioner
for Patent Examination Policy

Day : Monday
Date: 3/16/2009

PALM INTRANET

Time: 11:05:03

PTA Calculations for Application: 10/318855			
Application Filing Date:	12/12/2002	PTO Delay (PTO):	404
Issue Date of Patent:		Three Years:	0
Pre-Issue Petitions:	0	Applicant Delay (APPL):	412
Post-Issue Petitions:	0	Total PTA (days):	71
PTO Delay Adjustment:	79		

File Contents History

Number	Date	Contents Description	PTO	APPL	START
93	03/16/2009	ADJUSTMENT OF PTA CALCULATION BY PTO	79		
80	07/15/2008	MAIL NOTICE OF ALLOWANCE	18		62
79	07/14/2008	ISSUE REVISION COMPLETED			
78	07/14/2008	DOCUMENT VERIFICATION			
77	07/14/2008	NOTICE OF ALLOWANCE DATA VERIFICATION COMPLETED			
76	07/14/2008	CASE DOCKETED TO EXAMINER IN GAU			
75	07/07/2008	EXAMINER'S AMENDMENT COMMUNICATION			
74	07/07/2008	NOTICE OF ALLOWABILITY			
70	02/27/2008	INFORMATION DISCLOSURE STATEMENT CONSIDERED			
69	05/09/2008	INFORMATION DISCLOSURE STATEMENT CONSIDERED			
68	05/09/2008	REFERENCE CAPTURE ON IDS			
67	05/09/2008	INFORMATION DISCLOSURE STATEMENT (IDS) FILED		72	62
66	05/09/2008	INFORMATION DISCLOSURE STATEMENT (IDS) FILED			
65	02/27/2008	REFERENCE CAPTURE ON IDS			
64	02/27/2008	INFORMATION DISCLOSURE STATEMENT (IDS) FILED			
63	05/05/2008	DATE FORWARDED TO EXAMINER			
62	02/27/2008	RESPONSE AFTER NON-FINAL ACTION			
61	02/27/2008	INFORMATION DISCLOSURE STATEMENT (IDS) FILED			
60	11/28/2007	MAIL NON-FINAL REJECTION			
59	11/26/2007	NON-FINAL REJECTION			
58	09/18/2007	DATE FORWARDED TO EXAMINER			

57	09/14/2007	RESPONSE AFTER NON-FINAL ACTION		92	55
56	09/14/2007	REQUEST FOR EXTENSION OF TIME - GRANTED			
55	03/14/2007	MAIL NON-FINAL REJECTION			
54	03/09/2007	NON-FINAL REJECTION			
53	01/10/2007	DATE FORWARDED TO EXAMINER			
52	12/21/2006	AMENDMENT SUBMITTED/ENTERED WITH FILING OF CPA/RCE			
51	01/10/2007	DATE FORWARDED TO EXAMINER			
50	12/21/2006	REQUEST FOR CONTINUED EXAMINATION (RCE)		86	40
49	01/10/2007	DISPOSAL FOR A RCE/CPA/129 (EXPRESS ABANDONMENT IF CPA)			
48	12/21/2006	REQUEST FOR EXTENSION OF TIME - GRANTED			
47	12/21/2006	WORKFLOW - REQUEST FOR RCE - BEGIN			
46	11/29/2006	MAIL ADVISORY ACTION (PTOL - 303)			
45	11/27/2006	ADVISORY ACTION (PTOL-303)			
44	11/08/2006	DATE FORWARDED TO EXAMINER			
43	10/31/2006	AMENDMENT AFTER FINAL REJECTION			
42	10/31/2006	REQUEST FOR EXTENSION OF TIME - GRANTED			
41	07/06/2006	CORRESPONDENCE ADDRESS CHANGE			
40	06/26/2006	MAIL FINAL REJECTION (PTOL - 326)			
39	06/21/2006	FINAL REJECTION			
38	05/04/2006	DATE FORWARDED TO EXAMINER			
37	04/26/2006	RESPONSE AFTER NON-FINAL ACTION		27	35
36	04/26/2006	REQUEST FOR EXTENSION OF TIME - GRANTED			
35	12/30/2005	MAIL NON-FINAL REJECTION			
34	12/19/2005	NON-FINAL REJECTION			
33	07/08/2004	INFORMATION DISCLOSURE STATEMENT CONSIDERED			
32	10/06/2003	INFORMATION DISCLOSURE STATEMENT CONSIDERED			
31	11/02/2005	CORRESPONDENCE ADDRESS CHANGE			
30	10/17/2005	MISCELLANEOUS INCOMING LETTER			
29	11/02/2005	DATE FORWARDED TO EXAMINER			
28	10/17/2005	RESPONSE TO ELECTION / RESTRICTION FILED		135	24
		REQUEST FOR EXTENSION OF TIME - GRANTED			

27	10/17/2005				
26	04/13/2005	MAIL NOTICE OF RESTARTED RESPONSE PERIOD			
25	04/12/2005	LETTER RESTARTING PERIOD FOR RESPONSE (I.E. LETTER RE: REFERENCES)			
24	03/04/2005	MAIL RESTRICTION REQUIREMENT	386		-1
23	03/02/2005	REQUIREMENT FOR RESTRICTION / ELECTION			
22	01/31/2005	IFW TSS PROCESSING BY TECH CENTER COMPLETE			
21	12/12/2002	CLAIMS PTO			
20	12/12/2002	PRELIMINARY AMENDMENT			
19	08/16/2004	CASE DOCKETED TO EXAMINER IN GAU			
18.7	07/08/2004	INFORMATION DISCLOSURE STATEMENT (IDS) FILED			
18	07/08/2004	INFORMATION DISCLOSURE STATEMENT (IDS) FILED			
17	12/19/2003	CORRESPONDENCE ADDRESS CHANGE			
16.7	10/06/2003	INFORMATION DISCLOSURE STATEMENT (IDS) FILED			
16	10/06/2003	INFORMATION DISCLOSURE STATEMENT (IDS) FILED			
15	08/21/2003	APPLICATION RETURN FROM OIPE			
14	08/22/2003	APPLICATION IS NOW COMPLETE			
13	08/21/2003	APPLICATION RETURN TO OIPE			
12	08/21/2003	APPLICATION DISPATCHED FROM OIPE			
11	08/21/2003	APPLICATION IS NOW COMPLETE			
10	05/02/2003	ADDITIONAL APPLICATION FILING FEES			
9	05/02/2003	A SET OF SYMBOLS AND PROCEDURES, PROVIDED TO THE PTO ON A SET OF COMPUTER LISTINGS, THAT DESCRIBE IN			
8	05/02/2003	CRF DISK HAS BEEN RECEIVED BY PREEXAM / GROUP / PCT			
7	08/05/2003	CRF IS GOOD TECHNICALLY / ENTERED INTO DATABASE			
6	03/05/2003	SEQUENCE ERRORS			
4	02/20/2003	CLEARED BY L&R (LARS)			
3	01/22/2003	IFW SCAN & PACR AUTO SECURITY REVIEW			
2	12/20/2002	IFW SCAN & PACR AUTO SECURITY REVIEW			
1	12/12/2002	INITIAL EXAM TEAM NN			

Search Another: Application# [ ] Search

EXPLANATION OF PTA CALCULATION

EXPLANATION OF PTE CALCULATION

To go back, right click here and select Back. To go forward, right click here and select Forward. To refresh, right click here and select Refresh.

Back to OASIS | Home page

UNITED STATES PATENT AND TRADEMARK OFFICE

Commissioner for Patents
United States Patent and Trademark Office
P.O. Box 1450
Alexandria, VA 22313-1450
www.uspto.gov

FOLEY HOAG, LLP
PATENT GROUP, (w/WYS)
155 SEAPORT BLVD.
BOSTON MA 02210-2600

MAILED

MAR 2 6 2010

OFFICE OF PETITIONS

In re Patent No. 7,521,532
Issued: April 21, 2009
Application No. 10/318,855
Filed: December 12, 2002
Dkt. No.: WYS-010.02

: DECISION ON APPLICATION FOR
: PATENT TERM ADJUSTMENT and
: NOTICE OF INTENT TO ISSUE
: CERTIFICATE OF CORRECTION
:

This is a decision on the petition filed on June 22, 2009, which is being treated as a petition under 37 CFR 1.705(d) requesting that the patent term adjustment indicated on the above-identified patent be corrected to indicate that the term of the above-identified patent is extended or adjusted by 445 days.

The petition to correct the patent term adjustment indicated on the above-identified patent is **GRANTED to the extent indicated herein**.

As the period from the filing date of the request for continued examination (RCE) to the issue date of the patent is not included in the "B" delay period, the over three year period begins on December 13, 2005 and ends on December 20, 2006, the day before the RCE was filed, and not December 21, 2006 the day of filing of the RCE as calculated by patentees. See, 35 U.S.C. 154(b)(1)(B)(i). Thus, the over 3 year period is 373 days not 374 days. As such, the correct patent term adjustment is 444 days, not 445 days.

The Office will *sua sponte* issue a certificate of correction. Pursuant to 37 CFR 1.322, the Office will not issue a certificate of correction without first providing assignee or patentee an opportunity to be heard. Accordingly, patentees are given **one (1) month or thirty (30) days**, whichever is longer, from the mail date of this decision to respond. No extensions of time will be granted under § 1.136. See, 37 CFR 1.323(a)(4).

The Office acknowledges the previous submission of the $200.00 fee set forth in 37 CFR 1.18(e). No additional fees are required.

The application is being forwarded to the Certificates of Corrections Branch for issuance of a certificate of correction. The Office will issue a certificate of correction indicating that the term of the above-identified patent is extended or adjusted by 444 days.

Telephone inquiries specific to this matter should be directed to the undersigned at (571) 272-3205.

/ALESIA M. BROWN/

Alesia M. Brown
Senior Petitions Attorney
Office of Petitions

Enclosure: Copy of DRAFT Certificate of Correction

UNITED STATES PATENT AND TRADEMARK OFFICE

CERTIFICATE OF CORRECTION

PATENT : 7,521,532 B2

DATED : **April 21, 2009** **DRAFT**

INVENTOR(S) : DUNUSSI-JOANNOPOULOS, et al.

It is certified that error appears in the above-identified patent and that said Letters Patent is hereby corrected as shown below:

On the cover page,

[*] Notice: Subject to any disclaimer, the term of this patent is extended or adjusted under 35 USC 154(b) by 136 days

Delete the phrase "by 136 days" and insert – by 444 days--

UNITED STATES PATENT AND TRADEMARK OFFICE

Commissioner for Patents
United States Patent and Trademark Office
P.O. Box 1450
Alexandria, VA 22313-1450
www.uspto.gov

CESARI AND MCKENNA, LLP
88 BLACK FALCON AVENUE
BOSTON, MA 02210

COPY MAILED

JUL 2 8 2005

OFFICE OF PETITIONS

In re Application of :
Theodore E. Spielberg :
Application No. 10/318,862 :
Filed: December 13, 2002 :
Attorney Docket No. 15343-0033 :

ON PETITION

This is a decision on the petition under 37 C.F.R. 1.137(b), filed April 20, 2005, to revive the above identified application.

The petition is dismissed.

Any request for reconsideration of this decision must be submitted within TWO (2) MONTHS from the mail date of this decision. Extensions of time under 37 CFR 1.136(a) are permitted. The reconsideration request should include a cover letter entitled "Renewed Petition under 37 CFR 1.137(b)."

This application became abandoned for failure to timely reply within three months to the final Office action mailed October 19, 2004. Accordingly, this application became abandoned on January 20, 2005.

Effective December 1, 1997, the provisions of 37 CFR 1.137(b) now provide that where the delay in reply was unintentional, a petition may be filed to revive an abandoned application pursuant to 37 CFR 1.137(b). A grantable petition pursuant to 37 CFR 1.137(b) must be accompanied by:

(1) the required reply, unless previously filed. In a nonprovisional application abandoned for failure to prosecute, the required reply may be met by the filing of a continuing application. In an application, abandoned or lapsed for failure to pay the issue fee or any portion thereof, the required reply must be the payment of the issue fee or any outstanding balance thereof.

(2) the petition fee as set forth in 37 CFR 1.17(m);

(3) a statement that the entire delay in filing the required reply from the due date for the reply until the filing of a grantable petition pursuant to 37 CFR 1.137(b) was

unintentional. The Commissioner may require additional information where there is a question whether the delay was unintentional; and

(4) any terminal disclaimer (and fee set forth in 37 CFR 1.20(d)) required pursuant to 37 CFR 1.137(d).

The instant petition does not satisfy requirement (1) above.

The above-identified application became abandoned for failure to reply within the meaning of 37 CFR 1.113 in a timely manner to the final Office action mailed July 1, 2004. Accordingly, in a nonprovisional application abandoned for failure to reply to a final action, the reply required for consideration of a petition to revive must be one of the following:

-a Notice of Appeal and appeal fee;

-an amendment under 37 CFR 1.116 that cancels all the rejected claims or otherwise prima facie places the application in condition for allowance;

- the filing of an RCE (accompanied by a submission that meets the reply requirements of 37 CFR 1.111 and the requisite fee) under 37 CFR 1.114 for utility or plant applications filed on or after June 8, 1995; or

- the filing of a continuing application under 37 CFR 1.53(b) (or a CPA under 37 CFR 1.53(d) if the application is a design application).

The amendment, filed April 20, 2005, has been reviewed by the Examiner, and it does not place the application in condition for allowance. As such, the required reply has not been submitted and the petition must be dismissed.

A courtesy copy of the PTOL-303 Advisory Action is attached to the instant decision. However, please note, this courtesy copy of the advisory form PTOL 303 merely serves as an advisory notice to the Office of Petitions regarding the decision of the examiner on the amendment after final rejection.

Further correspondence with respect to this matter should be addressed as follows:

By mail: Mail Stop Petition
Commissioner for Patents
Box 1450
Alexandria, VA 22313

By FAX: (571) 273-8300
Attn: Office of Petitions

By hand: Customer Service Window
Randolph Building
401 Dulany Street
Alexandria, VA 22314

Telephone inquiries should be directed to the undersigned at (571) 272-3228.

Edward J. Tannouse
Petitions Attorney
Office of Petitions/Patent
United States Patent and Trademark Office

Attachment:
Courtesy copy of the PTOL-303 Advisory Action

UNITED STATES PATENT AND TRADEMARK OFFICE

Commissioner for Patents
United States Patent and Trademark Office
P.O. Box 1450
Alexandria, VA 22313-1450
www.uspto.gov

CESARI AND MCKENNA, LLP
88 BLACK FALCON AVENUE
BOSTON, MA 02210

COPY MAILED

AUG 17 2005

OFFICE OF PETITIONS

In re Application of :
Theodore E. Spielberg :
Application No. 10/318,862 : ON PETITION
Filed: December 13, 2002 :
Attorney Docket No. 15343-0033 :

This is a decision on the renewed petition under 37 CFR 1.137(b), filed August 5, 2005, to revive the above-identified application.

The petition is **GRANTED**.

This application became abandoned for failure to timely reply within three months to the final Office action mailed October 19, 2004. Accordingly, this application became abandoned on January 20, 2005. A Notice of Abandonment was mailed on August 4, 2005.

The file is being forwarded to Technology Center 3700 for review of the Request for Continued Examination (RCE), filed August 5, 2005, *in due course*.

Telephone inquiries concerning this matter may be directed to the undersigned at (571) 272-3228.

Edward J. Tannouse
Petitions Attorney
Office of Petitions/Patent
Office of the Deputy Commissioner
for Patent Examination Policy

UNITED STATES PATENT AND TRADEMARK OFFICE

Commissioner for Patents
United States Patent and Trademark Office
P.O. Box 1450
Alexandria, VA 22313-1450
www.uspto.gov

Date Mailed : 06/08/06

Patent No. : 7176164 B2
Patent Issued : 02/13/07
Docket No. : 693.005

Re: Request for Certificate of Correction

Consideration has been given your request for the issuance of a certificate of correction for the above-identified patent under the provisions of Rule(s) 1.322.

In the title, it is the practice to exclude words such as "Improvements in", "A", "Novel", etc., from the printed patent. **"Therefore, no correction(s) is in order here under United States Codes (U.S.C.) 254 and the Code of Federal Regulation (C.F.R.) 1322."**

In view of the foregoing, your request in this matter is hereby denied.

Lamonte M. Newsome
For Cecelia Newman, Supervisor
Decisions & Certificates
Of Correction Branch
(703)-308-9390 #112 or (703) 305-8309

BOYLE FREDRICKSON NEWHOLM STEIN & GRATZ, S.C.
250 E. WISCONSIN AVENUE
SUITE 1030
MILWAUKEE WI 53202

LMN

UNITED STATES PATENT AND TRADEMARK OFFICE

Commissioner for Patents
United States Patent and Trademark Office
P.O. Box 1450
Alexandria, VA 22313-1450
www.uspto.gov

WARE FRESSOLA VAN DER SLUYS & ADOLPHSON LLP
BRADFORD GREEN BUILDING 5
755 MAIN STREET, P O BOX 224
MONROE, CT 06468

COPY MAILED

DEC 0 1 2005

OFFICE OF PETITIONS

In re Application of	:	
Ikuo Ohya et al	:	
Application No. 10/318,875	:	DECISION ON PETITION
Filed: December 13, 2002	:	UNDER 37 CFR 1.313(c)(2)
Attorney Docket No. 542-001.2-2-1	:	

This is a decision on the petition filed April 6, 2005, requesting withdrawal of the above-identified application from issue after payment of the issue fee.[1]

The petition is dismissed as moot in view of the Notice of Withdrawal from Issue under 37 CFR 1.313(b), mailed April 7, 2005 by the Director of Technology Center 1700.

Inquiries concerning this decision may be directed to the undersigned at (571) 272-3218.

Frances Hicks
Petitions Examiner
Office of Petitions

[1] The existence of this petition was only recently brought to the attention of the Office of Petitions.

UNITED STATES PATENT AND TRADEMARK OFFICE

Commissioner for Patents
United States Patent and Trademark Office
P.O. Box 1450
Alexandria, VA 22313-1450
www.uspto.gov

FROMMER LAWRENCE & HAUG
745 FIFTH AVENUE- 10TH FL.
NEW YORK, NY 10151

COPY MAILED

MAR 29 2005

OFFICE OF PETITIONS

In re Patent of
Stewart et al.
Patent No. 6,736,989
Issue Date: May 18, 2004
Application No. 10/318,901
Filing Date: December 13, 2002
Attorney Docket No. 930032-2002.1

Decision on Petition

This is a decision on the petition under 37 CFR 1.182, filed September 16, 2004, requesting issuance of duplicate Letters Patent for the above-identified application.

The petition is **granted**.

Facts:

The issue fee was paid on March 15, 2004.

The correspondence address was changed on April 15, 2004. A paper authorizing a change to the address cannot be found in the file. Therefore, the Office assumes this change was the result of a clerical error by an Office employee.

The patent issued on May 18, 2004.

The patent was returned as undelivered to the Office on February 18, 2005.

Analysis:

Petitioner has proven non-receipt of the Letters Patent due to Office error. Therefore, a fee has not been charged to petitioner's deposit account for the instant petition.

The address of record has been changed back to the address associated with customer no. 209999.

Steps to be taken:

If possible, the Office of Publications will mail the original patent to petitioner. If this step cannot be done, then the Office of Publications will issue duplicate Letters Patent.

A copy of this decision is being forwarded to Publishing Division. The patent file is being forwarded to Files Repository.

Telephone inquiries related to the petition should be directed to Petitions Attorney Steven Brantley at (571) 272-3203. Any questions concerning delays in the issuance of the duplicate Letters Patent should be directed to Krystal Paige at (703) 305-8237.

Charles Steven Brantley
Petitions Attorney
Office of Petitions

cc: Krystal Paige, P/OPPD, Crystal Park 3-910 (FAX 703-746-4642)

UNITED STATES PATENT AND TRADEMARK OFFICE

Commissioner for Patents
United States Patent and Trademark Office
P.O. Box 1450
Alexandria, VA 22313-1450
www.uspto.gov

COPY MAILED

MAR 0 1 2007

OFFICE OF PETITIONS

CROMPTON, SEAGER & TUFTE, LLC
1221 NICOLLET AVENUE
SUITE 800
MINNEAPOLIS MN 55403-2420

In re Application of :
Vrba. :
Application No. 10/318,907 : DECISION ON PETITION
Filed: December 13, 2002 :
Attorney Docket No. 1001.1610101 :

This is a decision on the petition under 37 CFR 1.137(b), filed December 12, 2006, to revive the above-identified application.

This above-identified application became abandoned for failure to timely file a response to the final Office Action of June 8, 2006. The final Office Action set a three (3) month shortened statutory period for reply. No extensions of time were obtained under the provisions of 37 CFR §1.136(a). This application became abandoned on September 9, 2006. This decision precedes the mailing of a Notice of Abandonment.

The requirements for the filing of a grantable petition under 37 CFR §1.137(b) have been met. This petition is hereby **Granted**.

This application is being revived for purposes of continuity only and since continuity has been established by this decision reviving the application, the application is again abandoned in favor of the continuing Application No. 11/608,619 filed on December 8, 2006.

This application is being forwarded to the files repository.

Telephone inquiries concerning this matter should be directed to the undersigned at (571) 272-3215.

Charlema R. Grant

Charlema R. Grant
Petitions Attorney
Office of Petitions

UNITED STATES PATENT AND TRADEMARK OFFICE

Commissioner for Patents
United States Patent and Trademark Office
P.O. Box 1450
Alexandria, VA 22313-1450
www.uspto.gov

HARNESS DICKEY & PIERCE PLC
P O BOX 828
BLOOMFIELD HILLS, MI 48303

COPY MAILED
SEP 19 2006
OFFICE OF PETITIONS

In re Application of :
Molly L. Boose et al :
Application No. 10/318,921 : DECISION GRANTING PETITION
Filed: December 13, 2002 : UNDER 37 CFR 1.313(c)(2)
Attorney Docket No. 7784-000583 :

This is a decision on the petition, filed September 14, 2006, under 37 CFR 1.313(c)(2) to withdraw the above-identified application from issue after payment of the issue fee.

The petition is **GRANTED**.

The above-identified application is withdrawn from issue for consideration of a submission under 37 CFR 1.114 (request for continued examination). See 37 CFR 1.313(c)(2).

Petitioner is advised that the issue fee paid on August 30, 2006 in the above-identified application cannot be refunded. If, however, the above-identified application is again allowed, petitioner may request that it be applied towards the issue fee required by the new Notice of Allowance.[1]

Telephone inquiries should be directed to the undersigned at (571) 272-3218.

This matter is being referred to Technology Center AU 2624 for processing of the request for continued examination under 37 CFR 1.114 and for consideration of the Information Disclosure Statement.

Frances Hicks
Petitions Examiner
Office of Petitions

C:\Documents and Settings\FHicks\My Documents\470\Sept9\318921.wpd

[1] *The request to apply the issue fee to the new Notice may be satisfied by completing and returning the new Part B – Fee(s) Transmittal Form (along with any balance due at the time of submission). Petitioner is advised that the Issue Fee Transmittal Form must be completed and timely submitted to avoid abandonment.*

UNITED STATES PATENT AND TRADEMARK OFFICE

COMMISSIONER FOR PATENTS
UNITED STATES PATENT AND TRADEMARK OFFICE
P.O. BOX 1450
ALEXANDRIA, VA 22313-1450
www.uspto.gov

BACHMAN & LAPOINTE, P.C.
900 CHAPEL STREET
SUITE 1201
NEW HAVEN, CT 06510

COPY MAILED

MAY 14 2008

OFFICE OF PETITIONS

In re Application of :
Marcelo Fernando Lamon, et al. :
Application No. 10/318,928 : ON PETITION
Filed: December 13, 2002 :
Attorney Docket No. 02-814 :

This is a decision on the petition under 37 CFR 1.137(b) to revive the above-identified application, filed February 1, 2008.

The petition is **GRANTED**.

The application became abandoned for failure s to timely pay the issue and publication fees on or before December 5, 2007, as required by the Notice of Allowance and Fee(s) Due, mailed September 9, 2007, which set a statutory period for reply of three (3) months. On February 1, 2008, the present petition was filed. A Notice of Abandonment was subsequently mailed on February 8, 2008.

The petition is found to comply with the requirements of 37 CFR 1.137(b) in that petitioner has supplied (1) the reply in the form of the $720 issue fee and the $300 publication fee; (2) the petition fee of $770; and (3) an adequate statement of unintentional delay.

The application is being referred to the Office of Data Management to be processed into a patent.

Telephone inquires related to this decision should be directed to the undersigned at (571) 272-3204. Telephone inquiries related to processing as a patent should be directed to (571) 272-4200.

Sherry D. Brinkley
Petitions Examiner
Office of Petitions

UNITED STATES PATENT AND TRADEMARK OFFICE

Commissioner for Patents
United States Patent and Trademark Office
P.O. Box 1450
Alexandria, VA 22313-1450
www.uspto.gov

J. PETER FASSE
FISH & RICHARDSON P.C.
225 FRANKLIN STREET
BOSTON MA 02110-2804

COPY MAILED

SEP 21 2004

OFFICE OF PETITIONS

In re Application of :
Roland Cherif-Cheikh :
Application No. 10/318,935 : DECISION ON PETITION
Filed: December 13, 2002 : UNDER 37 CFR 1.78(a)(3)
Attorney Docket No. 05339-015004 :

This is a decision on the petition under 37 CFR 1.78(a)(3), filed September 13, 2004, to accept an unintentionally delayed claim under 35 U.S.C. §§ 120 and 365(c) for the benefit of priority to the prior-filed PCT and nonprovisional application set forth in the amendment filed concurrently with the instant petition.

The petition is **GRANTED**.

A petition for acceptance of a claim for late priority under 37 CFR 1.78(a)(3) is only applicable to those applications filed on or after November 29, 2000. Further, the petition is appropriate only after the expiration of the period specified in 37 CFR 1.78(a)(2)(ii). In addition, the petition under 37 CFR 1.78(a)(3) must be accompanied by:

> **(1)** the reference required by 35 U.S.C. § 120 and 37 CFR 1.78(a)(2)(i) of the prior-filed application, unless previously submitted;[1]
> **(2)** the surcharge set forth in § 1.17(t); and
> **(3)** a statement that the entire delay between the date the claim was due under 37 CFR 1.78(a)(2)(ii) and the date the claim was filed was unintentional. The Commissioner may require additional information where there is a question whether the delay was unintentional.

---

[1] Any nonprovisional application or international application designating the United States of America claiming the benefit of one or more prior-filed copending applications or international applications designating the United States of America must contain or be amended to contain a reference (amendment to the first line of the specification following the title or in an application data sheet (ADS) to each such prior-filed application, identifying it by application number (consisting of the series code and serial number) or international application number and international filing date filing date and indicating the relationship of the applications. Cross references to other related applications may be made when appropriate (*see* § 1.14).

The instant pending application was filed on December 13, 2002, and was pending at the time of filing of the instant petition. A reference to the prior-filed PCT application has been included in an amendment to the first sentence of the specification following the title, as required by 37 CFR 1.78(a)(2)(iii).

The instant nonprovisional application was filed after November 29, 2000, and the claim herein for the benefit of priority to the prior-filed applications is submitted after expiration of the period specified in 37 CFR 1.78(a)(2)(ii). Also, the reference to the prior-filed applications was submitted during the pendency of the instant nonprovisional application, for which the claim for benefit of priority is sought. *See* 35 U.S.C. §§ 120 and 365(c). Accordingly, having found that the instant petition for acceptance of an unintentionally delayed claim for the benefit of priority under 35 U.S.C. §§ 120 and (365(c) to the prior-filed applications satisfies the conditions of 37 CFR 1.78(a)(3), the petition is granted.

The granting of the petition to accept the delayed benefit claim to the prior-filed applications under 37 CFR 1.78(a)(3) should not be construed as meaning that the instant application is entitled to the benefit of the prior-filed applications. In order for the instant application to be entitled to the benefit of the prior-filed applications, all other requirements under 35 U.S.C. § 120 and 37 CFR 1.78(a)(1) and (a)(2) must be met. Similarly, the fact that the corrected Filing Receipt accompanying this decision on petition includes the prior-filed applications should not be construed as meaning that applicant is entitled to the claim for benefit of priority to the prior-filed applications noted thereon. Accordingly, the examiner will, in due course, consider this benefit claim and determine whether the instant application is entitled to the benefit of the earlier filing date.

A corrected Filing Receipt, which includes the priority claim to the prior-filed applications, accompanies this decision on petition.

Any inquiries concerning this decision may be directed to Karen Creasy at (703) 305-8859.

The examiner of Technology Center Art Unit 1615 will consider applicant's entitlement to claim benefit of priority under 35 U.S.C. §§ 120 and 365(c) to the prior-filed applications.

Karen Creasy

Karen Creasy
Petitions Examiner
Office of Petitions
Office of the Deputy Commissioner
for Patent Examination Policy

ATTACHMENT: Corrected Filing Receipt

UNITED STATES PATENT AND TRADEMARK OFFICE

Commissioner for Patents
United States Patent and Trademark Office
P.O. Box 1450
Alexandria, VA 22313-1450
www.uspto.gov

J. PETER FASSE
FISH & RICHARDSON P.C.
225 FRANKLIN STREET
BOSTON MA 02110-2804

COPY MAILED

SEP 1 7 2004

OFFICE OF PETITIONS

ON PETITION

In re Application of :
Roland Cherif-Cheikh :
Application No. 10/318,935 :
Filed: December 13, 2002 :
Attorney Docket No. 05339-015004 :

This is a decision on the petition, filed September 13, 2004, under 37 CFR 1.313(c)(2) to withdraw the above-identified application from issue after payment of the issue fee.

The petition is **GRANTED**.

The above-identified application is withdrawn from issue for consideration of a submission under 37 CFR 1.114 (request for continued examination). See 37 CFR 1.313(c)(2).

Petitioner is advised that the issue fee paid on March 24, 2004 in the above-identified application cannot be refunded. If, however, the above-identified application is again allowed, petitioner may request that it be applied towards the issue fee required by the new Notice of Allowance.[1]

Telephone inquiries should be directed to the undersigned at (703) 305-8859.

The application will remain in the Office of Petitions to consider the petiion under 37 CFR 1.78(a)(6) filed with the instant petition.

Karen Creasy

Karen Creasy
Petitions Examiner
Office of Petitions
Office of the Deputy Commissioner
for Patent Examination Policy

---

[1] The request to apply the issue fee to the new Notice may be satisfied by completing and returning the new Issue Fee Transmittal Form PTOL-85(b), which includes the following language thereon: "Commissioner for Patents is requested to apply the Issue Fee and Publication Fee (if any) or re-apply any previously paid issue fee to the application identified above." Petitioner is advised that, whether a fee is indicated as being due or not, the Issue Fee Transmittal Form **must** be completed and timely submitted to avoid abandonment. Note the language in bold text on the first page of the Notice of Allowance and Fee(s) Due (PTOL-85).

UNITED STATES PATENT AND TRADEMARK OFFICE

Commissioner for Patents
United States Patent and Trademark Office
P.O. Box 1450
Alexandria, VA 22313-1450
www.uspto.gov

KIRTON AND MCCONKIE
60 EAST SOUTH TEMPLE,
SUITE 1800
SALT LAKE CITY UT 84111

COPY MAILED

JUL 0 7 2006

OFFICE OF PETITIONS

In re Application of	:	
Badger et al.	:	
Application No. 10/318,936	:	ON PETITION
Filed: December 13, 2002	:	
Attorney Docket No. 10977.3	:	

This is a decision on the petition under 37 C.F.R. § 1.137(b), filed April 3, 2006, to revive the above-identified application.

The petition is **GRANTED.**

The petition satisfies the conditions for revival pursuant to the provisions of 37 CFR 1.137(b) in that (1) the reply in the form of a Request for Continued Examination (RCE), an Amendment and a Terminal Disclaimer; (2) the petition fee; and (3) the required statement of unintentional delay have been received. Accordingly, the response has been accepted as having been unintentionally delayed.

Petitioner stated a check in the amount of $395.00 was submitted with the instant petition for payment of the RCE fee. However, it does not appear said check was received. Accordingly, the $395.00 RCE fee will be charged to petitioner's deposit account as previously authorized.

This matter is being referred to Technology Center 3600 for processing of the Request for Continued Examination under 37 CFR 1.114 filed with the instant petition.

Telephone inquiries regarding this decision should be directed to the undersigned at (571) 272-3282.

Liana Chase
Petitions Examiner
Office of Petitions

NOTICE RE: CERTIFICATES OF CORRECTION

DATE : 3/4/05 **Paper No.:** _____

TO : **Supervisor, Art Unit** 2835

SUBJECT : Certificate of Correction Request in Patent No.: 6,791,847 B2 10/318,949

A response to the following question is requested with respect to the accompanying request for a certificate of correction.

With respect to the change(s) requested, correcting Office and/or Applicant's errors, should the patent read as shown in the certificate of correction? No new matter should be introduced, nor should the scope or meaning of the claims be changed. PET 1.48

PLEASE COMPLETE THIS FORM AND RETURN WITH FILE, WITHIN 7 DAYS, TO CERTIFICATES OF CORRECTION BRANCH - PK 3-915/922 PALM LOCATION 7580 - TEL. NO. 305-8309

THANK YOU FOR YOUR ASSISTANCE!

Note your decision by placing a check mark in the appropriate box below, indicating whether all changes requested in the Request for Certificate of Correction should be applied. Please specify which changes should not be applied and indicate the reason(s) for denial, in the "Comments" section below.

☒ YES ☐ NO

☐ Comments: _____

LYNN FEILD
SUPERVISORY PATENT EXAMINER
TECHNOLOGY CENTER 2800

Supervisor

2835
Art Unit

PTO/SB/44 (07-03)
Approved for use through 01/31/2004. OMB 0651-0033
U.S. Patent and Trademark Office; U.S. DEPARTMENT OF COMMERCE
Under the Paperwork Reduction Act of 1995, no persons are required to respond to a collection of information unless it displays a valid OMB control number.
(Also Form PTO-1050)

UNITED STATES PATENT AND TRADEMARK OFFICE

CERTIFICATE OF CORRECTION

PATENT NO : US 6,791,841 B1

DATED : September 14, 2004

INVENTOR(S) : Paul T. Tirrell, Ralph L. Specht, Jr., and Gary Goulet

It is certified that error appears in the above-identified patent and that said Letters Patent are hereby corrected as shown below:

Front page, Section (75) Inventors, "Paul T. Tirrell, Uxbridge, MA (US); Ralph L. Specht, Jr., Westborough, MA (US)" should read -- Paul T. Tirrell, Uxbridge, MA (US); Ralph L. Specht, Jr., Westborough, MA (US); Gary Goulet, Pascoag, RI (US)--.

MAILING ADDRESS OF SENDER: Chapin & Huang, L.L.C.
Westborough Office Park
1700 West Park Drive
Westborough, MA 01581

PATENT NO. 6,791,841

No. of additional copies

0

This collection of information is required by 37 CFR 1.322, 1.323, and 1.324. The information is required to obtain or retain a benefit by the public which is to file (and by the USPTO to process) an application. Confidentiality is governed by 35 U.S.C. 122 and 37 CFR 1.14. This collection is estimated to take 1.0 hour to complete, including gathering, preparing, and submitting the completed application form to the USPTO. Time will vary depending upon the individual case. Any comments on the amount of time you require to complete this form and/or suggestions for reducing this burden, should be sent to the Chief Information Officer, U.S. Patent and Trademark Office, U.S. Department of Commerce, P.O. Box 1450, Alexandria, VA 22313-1450. DO NOT SEND FEES OR COMPLETED FORMS TO THIS ADDRESS. SEND TO: Attention Certificate of Corrections Branch, Commissioner for Patents, P.O. Box 1450, Alexandria, VA 22313-1450.

If you need assistance in completing the form, call 1-800-PTO-9199 and select option 2.

20 OCT 2004 20 OCT 2004

UNITED STATES PATENT AND TRADEMARK OFFICE

Commissioner for Patents
United States Patent and Trademark Office
P.O. Box 1450
Alexandria, VA 22313-1450
www.uspto.gov

BRIAN M. DINGMAN
MIRICK O'CONNELL DEMALLIE & LOUGEE, LLP
1700 WEST PARK DRIVE
WESTBOROUGH, MA 01581

COPY MAILED

APR 14 2006

OFFICE OF PETITIONS

In re Application of	:	
Charles H. Marsland	:	
Application No. 10/318,950	:	ON PETITION
Filed: December 13, 2002	:	
Attorney Docket No. 16794-00006	:	

This is a decision on the petition under 37 CFR 1.137(b), filed December 2, 2005, to revive the above-identified application.

The petition is **GRANTED**.

The above-identified application became abandoned for failure to reply in a timely manner to the non-final Office action mailed August 30, 2004, which set a shortened statutory period for reply of three (3) months. No extension of time under the provisions of 37 CFR 1.136(a) were obtained. Accordingly, the above-identified application became abandoned on December 1, 2004.

Telephone inquiries concerning this decision should be directed to Irvin Dingle at (571) 272-3210.

This matter is being referred to Technology Center AU 1761 for further processing.

Irvin Dingle
Petitions Examiner
Office of Petitions

UNITED STATES PATENT AND TRADEMARK OFFICE

Commissioner for Patents
United States Patent and Trademark Office
P.O. Box 1450
Alexandria, VA 22313-1450
www.uspto.gov
AMB

Paper No. 6

LaRiviere, Grubman & Payne, LLP
P.O. Box 3140
Monterey, CA 93942

COPY MAILED

JUL 1 4 2003

OFFICE OF PETITIONS

In re Application of :
Lee, et al. :
Application No. 10/318,956 : DECISION GRANTING STATUS
Filed: December 13, 2002 : UNDER 37 CFR 1.47(a)
Atty. Dkt. No.: P1515 :
For: APPARATUS FOR DISPLAYING :
BATTERY PRODUCTS :

This is in response to the petition under 37 CFR 1.47(a), filed May 28, 2003.

The petition is **GRANTED**.

Petitioner has shown that despite diligent effort, Tan Bo Jun cannot be reached or located to execute the declaration for above-identified application.

Accordingly, the above-identified application and papers have been reviewed and found in compliance with 37 CFR 1.47(a). This application is hereby accorded Rule 1.47(a) status.

As provided in Rule 1.47(c), this Office will forward notice of this application's filing to the non-signing inventor at the address given in the petition. Notice of the filing of this application will also be published in the Official Gazette.

After this decision is mailed, the above-identified application will be returned to the Office of Initial Patent Examination for further processing.

Telephone inquiries related to this decision may be directed to the undersigned at (703) 305-0310.

Alesia M. Brown
Senior Petitions Attorney
Office of Petitions

UNITED STATES PATENT AND TRADEMARK OFFICE

Commissioner for Patents
United States Patent and Trademark Office
P. O. Box 1450
Alexandria, VA 22313-1450
www.uspto.gov

MAXYGEN, INC.
INTELLECTUAL PROPERTY DEPARTMENT
515 GALVESTON DRIVE
REDWOOD CITY, CA 94063

MAILED

JUN 14 2010

OFFICE OF PETITIONS

In re Application of :
Torben Lauesgaard Nissen et al :
Application No. 10/318,966 : ON PETITION
Filed: December 13, 2002 :
Attorney Docket No. 0208us620 :

This is a decision on the petition under 37 CFR 1.137(b), filed April 16, 2010, to revive the above-identified application.

The petition is **GRANTED**.

The two-month period for filing an appeal brief in triplicate (accompanied by the fee required by 37 CFR 1.17(c)), runs from the date of this decision.

The above-identified application became abandoned for failure to reply in a timely manner to the final Office action mailed May 19, 2009, which set a shortened statutory period for reply of three (3) months. No extensions of time under the provisions of 37 CFR 1.136(a) was obtained. Accordingly, the above-identified application became abandoned on August 20, 2009.

The file does not indicate a change of address has been submitted, although the address given on the petition differs from the address of record. If appropriate, a change of address should be filed in accordance with MPEP 601.03. A courtesy copy of this decision is being mailed to the address given on the petition; however, the Office will mail all future correspondence solely to the address of record.

Telephone inquiries concerning this decision should be directed to Irvin Dingle at (571) 272-3210.

This matter is being forwarded to Technology Center AU 1648 for further processing.

Irvin Dingle
Petitions Examiner
Office of Petitions

cc: Sharon Crane, Ph.D.
Rothwell et al
1525 K Street, NW, Suite 800
Washington, DC 20005

UNITED STATES PATENT AND TRADEMARK OFFICE

COMMISSIONER FOR PATENTS
UNITED STATES PATENT AND TRADEMARK OFFICE
P.O. BOX 1450
ALEXANDRIA, VA 22313-1450
www.uspto.gov

Paper No.

Jordan M. Becker
BLAKELY SOKOLOFF TAYLOR & ZAFMAN
12400 Wilshire Boulevard
Seventh Floor
Los Angeles, CA 90025-1030

MAIL

APR 1 3 2005

DIRECTOR OFFICE
TECHNOLOGY CENTER 2100

In re Application of:
Jay Farhat
Application No. 10/318,968
Filed: December 13, 2002
For: SERVICE QUALITY MONITORING PROCESS

DECISION ON REQUEST TO WITHDRAW AS ATTORNEY OR AGENT

This is a decision on the Request To Withdraw from Representation filed October 18, 2004.

A grantable request to withdraw as attorney of record should indicate thereon the present mailing addresses of the attorney(s) who is/are withdrawing from the record and of the applicant. The request for withdrawal must be signed by every attorney seeking to withdraw or contain a clear indication that one attorney is signing on behalf of another/others. A request to withdraw will not be approved unless at least 30 (thirty) days would remain between the date of approval and the later of the expiration date of a time to file a response or the expiration date of the maximum time period which can be extended under 37 C.F.R. § 1. 136(a). The effective date of withdrawal being the date of decision and not the date of request. See M.P.E.P. § 402.06. 37 C.F.R. § 1.36 further requires that the applicant or patent owner be notified of the withdrawal of the attorney or agent.

The request filed October 18, 2004 meets all the requirements. Accordingly the request is **GRANTED**.

All future communications from the Office will be directed to the below-listed address until otherwise notified by applicant. This correspondence address is provided by the withdrawn attorney(s). Applicant is reminded of the obligation to promptly notify the Patent and Trademark Office (Office) of any change in correspondence address to ensure receipt of all communications from the Office.

James R. Matthews

for Vincent N. Trans
Special Program Examiner
Technology Center 2100
Computer Architecture, Software, and
Information Security
(571) 272-3613

cc: SCHWEGMAN, LUNDBERG, WOESSNER & KLUTH, P.A.
99 Almaden Blvd., Suite 520
San Jose, CA 95113

UNITED STATES PATENT AND TRADEMARK OFFICE

Commissioner for Patents
United States Patent and Trademark Office
P.O. Box 1450
Alexandria, VA 22313-1450
www.uspto.gov

DAVID R. PRESTON & ASSOCIATES
APC
12625 HIGH BLUFF DRIVE
SUITE 205
SAN DIEGO, CA 92130

COPY MAILED

JAN 27 2006

OFFICE OF PETITIONS

In re Application of	:	
Chi Huynh	:	
Application No. 10/318,986	:	DECISION ON PETITION
Filed: December 13, 2002	:	TO WITHDRAW
Attorney Docket No. CHI-00101.P.1	:	FROM RECORD
	:	

This is a decision on the Request to Withdraw as attorney or agent of record under 37 C.F.R. § 1.36(b), filed November 7, 2005.

The request is **APPROVED**.

A grantable request to withdraw as attorney/agent of record must be signed by every attorney/agent seeking to withdraw or contain a clear indication that one attorney is signing on behalf of another/others. A request to withdraw will not be approved unless at least 30 (thirty) days would remain between the date of approval and the later of the expiration date of a time to file a response or the expiration date of the maximum time period which can be extended under 37 C.F.R. § 1.136(a).

The request was signed by David R. Preston, the sole attorney of record. Applicant is reminded that there is no attorney of record at this time.

The correspondence address of record has been changed and the new correspondence address is the address indicated below.

Telephone inquiries concerning this decision should be directed to Irvin Dingle at 571-272-3210.

Amelia Au
Petitions Examiner
Office of Petitions

cc: Chi Huynh
548 West Bonita Ave.
San Dimas, CA 91773

UNITED STATES PATENT AND TRADEMARK OFFICE

Commissioner for Patents
United States Patent and Trademark Office
P.O. Box 1450
Alexandria, VA 22313-1450
www.uspto.gov

MAR 23 2007

AKIN GUMP STRAUSS HAUER & FELD L.L.P.
ONE COMMERCE SQUARE
2005 MARKET STREET, SUITE 2200
PHILADELPHIA PA 19103

In re Application of	:
Yu-Show Fu et al	:
Serial No.: 10/318,997	: PETITION DECISION
Filed: December 13, 2002	:
Attorney Docket No.: U 014343-4	:

This is a decision on the PETITION FOR ACCEPTANCE OF COLOR DRAWINGS UNDER 37 CFR 1.84(a)(2). The petition was filed April 10,2003. Entry of color drawings requires: 1) three sets of the color drawings, 2) a proper amendment to the specification indicating color photographs or drawings are present in the file, and 3) the required fee under 37 CFR 1.17(h).

A review of the application record indicates that the petition meets all of the requirements for acceptance of color drawings. This is not to be construed that all of the drawings are accepted, only that the color drawings are acceptable.

The petition is **GRANTED**.

Should there be any questions with respect to this decision, please contact William R. Dixon, Jr., by mail addressed to: Director, Technology Center 1600, at the address listed above, or by telephone at 571-272-0519 or by facsimile transmission at 571-273-8300.

William R. Dixon, Jr.
Special Program Examiner
Technology Center 1600

UNITED STATES PATENT AND TRADEMARK OFFICE

Commissioner for Patents
United States Patent and Trademark Office
P.O. Box 1450
Alexandria, VA 22313-1450
www.uspto.gov

March 25, 2007

Patent No. : 6,987,661 B1
Ser. No. : 10/319022
Inventor(s) : Huemoeller, et al.
Issued : January 17, 2006
Title : **INTEGRATED CIRCUIT SUBSTRATE HAVING EMBEDDED PASSIVE COMPONENTS AND METHODS THEREFOR**
Docket No. : W2K2009CIP1

Re: Request for Certificate of Correction

Consideration has been given your request for the issuance of a certificate of correction for the above-identified patent under the provisions of Rules 1.322 and 1.323.

A petition under C.F.R. 1.182 is required to correct errors in spelling or order of inventors names or addresses, since inventor's names or addresses are printed solely in accordance with the type-written names and address and in the order of the type- written names and address on the Declaration, and since the error was the result of applicant's failure to comply with the requirement that the complete and correct names and addresses in correct order be indicated on the Declaration of Oath, no correction is in order here under the provisions of Rules 1.323, unless a petition is granted.

In view of the foregoing, your request is hereby denied.

However, a petition under 37 CFR 1.182 should be directed to the attention of the Assistant Commissioner for Patents using the following mailing address or FAX number.

By Mail: Commissioner of Patents and Trademarks
P.O. Box 1450
Alexandria, VA 22313-1450

By Fax: (571) 273-8300
Attn: Office of Petitions

Further correspondence concerning this matter should be filed and directed to Decisions and Certificates of Correction Branch.

Elisha Evans
Cecelia Newman, Supervisor
Decisions & Certificates
of Correction Branch
703 308- 9390 EXT. 110

WEISS & MOY PC
4204 NORTH BROWN AVENUE
SCOTTSDALE AZ 85251

CBN/eme

UNITED STATES PATENT AND TRADEMARK OFFICE

Commissioner for Patents
United States Patent and Trademark Office
P.O. Box 1450
Alexandria, VA 22313-1450
www.uspto.gov

KONRAD RAYNES & VICTOR, LLP
ATTN: IBM54
315 SOUTH BEVERLY DRIVE, SUITE 210
BEVERLY HILLS CA 90212

MAILED

OCT 30 2009

OFFICE OF PETITIONS

In re Application of :
Craig R. Tomlyn :
Application No. 10/319,056 : DECISION GRANTING PETITION
Filed: December 12, 2002 : UNDER 37 CFR 1.313(c)(2)
Attorney Docket No. SVL920020074US1 :

This is a decision on the petition under 37 CFR 1.313(c)(2), filed October 28, 2009, to withdraw the above-identified application from issue after payment of the issue fee.

The petition is **GRANTED**.

The above-identified application is withdrawn from issue for consideration of a submission under 37 CFR 1.114 (request for continued examination). *See* 37 CFR 1.313(c)(2).

Petitioner is advised that the issue fee paid on September 9, 2009 cannot be refunded. If, however, this application is again allowed, petitioner may request that it be applied towards the issue fee required by the new Notice of Allowance.[1]

Telephone inquiries regarding this decision should be directed to undersigned at (571) 272-1642. All other inquiries regarding the examination or status of this application should be directed to the Technology Center.

This application is being referred to Technology Center AU 2173 for processing of the request for continued examination under 37 CFR 1.114 and for consideration of the concurrently filed information disclosure statement.

/AMW/
April M. Wise
Petitions Examiner
Office of Petitions

[1] *The request to apply the issue fee to the new Notice may be satisfied by completing and returning the new Part B – Fee(s) Transmittal Form (along with any balance due at the time of submission). Petitioner is advised that the Issue Fee Transmittal Form must be completed and timely submitted to avoid abandonment of the application.*

UNITED STATES PATENT AND TRADEMARK OFFICE

Commissioner for Patents
United States Patent and Trademark Office
P.O. Box 1450
Alexandria, VA 22313-1450
www.uspto.gov

TRASK BRITT
P.O. BOX 2550
SALT LAKE CITY, UT 84110

COPY MAILED

SEP 30 2004

OFFICE OF PETITIONS

ON PETITION

In re Application of :
Warren M. Farnworth :
Application No. 10/319,064 :
Filed: December 13, 2002 :
Attorney Docket No. 2269-3924.1US(99-0034.1) :

This is a decision on the petition, filed September 21, 2004, under 37 CFR 1.313(c)(2) to withdraw the above-identified application from issue after payment of the issue fee.

The petition is **GRANTED.**

The above-identified application is withdrawn from issue for consideration of a submission under 37 CFR 1.114 (request for continued examination). See 37 CFR 1.313(c)(2).

Petitioner is advised that the issue fee paid on May 19, 2004 in the above-identified application cannot be refunded. If, however, the above-identified application is again allowed, petitioner may request that it be applied towards the issue fee required by the new Notice of Allowance.[1]

Telephone inquiries should be directed to the undersigned at (703) 305-8859.

The examiner of Technology Center AU 2811 will consider the request for continued examination under 37 CFR 1.114.

Karen Creasy

Karen Creasy
Petitions Examiner
Office of Petitions
Office of the Deputy Commissioner
for Patent Examination Policy

---

[1] The request to apply the issue fee to the new Notice may be satisfied by completing and returning the new Issue Fee Transmittal Form PTOL-85(b), which includes the following language thereon: "Commissioner for Patents is requested to apply the Issue Fee and Publication Fee (if any) or re-apply any previously paid issue fee to the application identified above." Petitioner is advised that, whether a fee is indicated as being due or not, the Issue Fee Transmittal Form **must** be completed and timely submitted to avoid abandonment. Note the language in bold text on the first page of the Notice of Allowance and Fee(s) Due (PTOL-85).

SPE RESPONSE FOR CERTIFICATE OF CORRECTION

Paper No.: X

DATE : October 02,2007

TO SPE OF : ART UNIT 2811

SUBJECT : Request for Certificate of Correction for Appl. No.: 10/319,064 Patent No.: 6833627 B2

A response is requested with respect to a request for a certificate of correction.

With respect to the change(s) requested to correct Office and/or Applicant's errors, should the patent read as shown in the certificate of correction attached herewith or the COCIN document(s), in IFW images for the above-identified patented application? No new matter should be introduced, nor should the scope or meaning of the claims be changed.

If the response is for an IFW, within 7 days, please complete and forward the response, to the employee (named below) via scanning into application images, using document code **COCX**.

DO NOT SENT TO ATTORNEY

If the response is for a paper file wrapper, please complete the response and forward the response with the paper file wrapper, to the employee (named below), within 7 days, to:

Certificates of Correction Branch (CofC)
South Tower - 9A22
Palm Location 7580

LAMONTE NEWSOME
Certificates of Correction Branch
703-308-9390 ext. 112

Thank You For Your Assistance

The request for issuing the above-identifled correction(s) is hereby:
Note your decision on the appropriate box.

☒ **Approved**	**All** changes apply.
☐ **Approved in Part**	Specify below which changes **do not** apply.
☐ **Denied**	State the reasons for denial below.

Comments: _____

LYNNE GURLEY
~~SUPERVISORY PATENT EXAMINER~~

SPE 2811 Art Unit

PAGE 2/2 * RCVD AT 10/29/2007 8:59:03 AM [Eastern Daylight Time] * SVR:USPTO-EFXRF-6/6 * DNIS:2709990 * CSID:7033050725 * DURATION (mm-ss):01-20

UNITED STATES PATENT AND TRADEMARK OFFICE

COMMISSIONER FOR PATENTS
UNITED STATES PATENT AND TRADEMARK OFFICE
P.O. BOX 1450
ALEXANDRIA, VA 22313-1450
WWW.USPTO.GOV

OIPE
JUL 23 2003
PATENT & TRADEMARK OFFICE
2900

Paper No. 5

BUCHANAN INGERSOLL, P.C.
ONE OXFORD CENTRE, 301 GRANT STREET
20TH FLOOR
PITTSBURGH PA 15219

COPY MAILED

MAY 27 2003

OFFICE OF PETITIONS

In re Application of
Ramberg
Application No. 10/319,068
Filed: December 13, 2002
Attorney Docket No. 020832
For: DIAGNOSTIC ASSAYS FOR BCWA

: DECISION REFUSING
: STATUS UNDER
: 37 CFR 1.47(b)

This is in response to the petition under 37 CFR 1.47(b), filed April 22, 2003.

The petition is dismissed.

Any request for reconsideration of this decision must be submitted within TWO (2) MONTHS from the mail date of this decision. Extensions of time under 37 CFR 1.136(a) are permitted. Any response should be entitled "Request for Reconsideration of Petition Under 37 CFR 1.47(b)" and may include an oath or declaration executed by the inventor. **Failure to respond will result in abandonment of the application.**

The above-identified application was filed on December 13, 2002 without an executed oath or declaration. Accordingly, on February 25, 2003, a "Notice to File Missing Parts of Nonprovisional Application" was mailed, requiring an executed oath or declaration and a surcharge for its late filing.

In response, petitioner timely filed a declaration executed on behalf of nonsigning inventor Elliot R. Ramberg by Martin Munzer, president of the sole inventor's former employer, Cygene, Inc., the surcharge, the petition fee, and the instant petition on April 22, 2003 A declaration of facts of Martin Munzer accompanied the petition. Mr. Munzer sets forth the last known address of Inventor Ramberg and states, "A good faith effort was made to present a copy of the application papers, including the declaration, to Elliot R. Ramberg" and that Inventor Ramberg refuses to execute the declaration for patent application.

A grantable petition under 37 CFR 1.47(b) requires:

(1) proof that the non-signing inventor cannot be reached or refuses to sign the oath or declaration;
(2) an acceptable oath or declaration;
(3) the petition fee;
(4) a statement of the last known address of the non-signing inventor;
(5) proof of proprietary interest; and
(6) proof of irreparable damage.

Applicant lacks item (1).

RECEIVED

JUL 28 2003

OFFICE OF PETITIONS

As to item (1), applicant has failed to establish that the inventor has refused to sign the declaration. The proof of the pertinent events should be made by a statement of someone with first hand knowledge of the events. The Office requires that the nonsigning inventor be provided with a complete copy of the application as filed. This includes the specification with claims, drawings, if any, and a declaration. See MPEP 409.03(d). Mr. Munzer's statement of facts does not establish that a complete copy of the application was mailed to Mr. Ramberg's last known address or that Mr. Ramberg was given the application papers. Petitioner must provide details as to the "good faith effort" made to present a copy of the application papers to Elliot R. Ramberg.

On the issue of refusal, the letter dated April 21, 2003 from Cygene, Inc., addressed to Elliot R. Ramberg, shows that the author believes Mr. Ramberg refused to sign the declaration. However, the letter does not explain upon what facts the belief is based.

When petitioner can show that Mr. Ramberg was mailed or received the complete application and that he either refused to sign the declaration or would not respond to the request that he sign the declaration, petitioner will have satisfied this requirement.

Further correspondence with respect to this matter should be addressed as follows:

By mail: Mail Stop PETITION
Commissioner for Patents
Post Office Box 1450
Alexandria, VA 22313-1450

By facsimile: (703) 308-6916
Attn: Office of Petitions/ E. Shirene Willis

By hand: Office of Petitions/ E. Shirene Willis
2201 South Clark Place
Crystal Plaza 4, Suite 3C23
Arlington, VA 22202

Telephone inquiries should be directed to the undersigned at (703 308-6712.

E. Shirene Willis
Senior Petitions Attorney
Office of Petitions

UNITED STATES PATENT AND TRADEMARK OFFICE

Commissioner for Patents
United States Patent and Trademark Office
P.O. Box 1450
Alexandria, VA 22313-1450
www.uspto.gov

BUCHANAN INGERSOLL, P.C.
ONE OXFORD CENTRE,
301 GRANT STREET
20TH FLOOR
PITTSBURG, PA 15219

COPY MAILED

DEC 0 5 2007

OFFICE OF PETITIONS

In re Application of
Elliot R. Ramberg
Application No. 10/319,068
Filed: December 13, 2002
Attorney Docket No. 020832

DECISION ON PETITION
TO WITHDRAW
FROM RECORD

This is a decision on the Request to Withdraw as attorney or agent under 37 C.F.R. § 1.36(b) or 37 C.F.R. § 10.40 filed June 22, 2007.

The request is **APPROVED**.

A grantable request to withdraw as attorney/agent of record must be signed by every attorney/agent seeking to withdraw or contain a clear indication that one attorney is signing on behalf of another/others. A request to withdraw will not be approved unless at least 30 (thirty) days would remain between the date of approval and the later of the expiration date of a time to file a response or the expiration date of the maximum time period which can be extended under 37 C.F.R. § 1.136(a).

The request was signed by Duane A. Stewart, III on behalf of all attorneys/agents of record. All attorneys/agents of record have been withdrawn.

The request to change the correspondence of record is not acceptable as the requested correspondence address is not that of (1) the first named signing inventor; or (2) an intervening assignee of the entire interest under 37 C.F.R. 3.71. Accordingly, all correspondence will be mailed to the sole inventor. A courtesy copy of this decision will be mailed to the address noted on the request to withdraw. If this firm desires to receive future correspondence regarding this application, the proper power of attorney documents must be submitted.
Applicant is reminded that there is no attorney of record at this time.

A Notice of Appeal was filed on June 19, 2007. Failure to file an appeal brief timely will result in the abandonment of this application.

Telephone inquires concerning this decision should be directed to Kimberly Inabinet at 571-272-4618.

Kimberly Inabinet
Petitions Examiner
Office of Petitions

cc: Elliot R. Ramberg
1310 N.W. 64th Avenue
Hollywood, FL 33024

cc: Martin Munzer
Cygene Laboratories, Inc.
7786 Wiles Road
Coral Springs, FL 33067

UNITED STATES PATENT AND TRADEMARK OFFICE

UNITED STATES DEPARTMENT OF COMMERCE
United States Patent and Trademark Office
Address: COMMISSIONER FOR PATENTS
P.O. Box 1450
Alexandria, Virginia 22313-1450
www.uspto.gov

APPLICATION NUMBER	FILING OR 371(C) DATE	FIRST NAMED APPLICANT	ATTY. DOCKET NO./TITLE
10/319,068	12/13/2002	Elliot R. Ramberg	020832

CONFIRMATION NO. 1297

23464
BUCHANAN INGERSOLL & ROONEY PC
P.O. BOX 1404
ALEXANDRIA, VA 22313-1404

POWER OF ATTORNEY NOTICE

OC000000027086878

Date Mailed: 12/05/2007

NOTICE REGARDING CHANGE OF POWER OF ATTORNEY

This is in response to the Power of Attorney filed 06/22/2007.

- The withdrawal as attorney in this application has been accepted. Future correspondence will be mailed to the new address of record. 37 CFR 1.33.

/kainabinet/

Office of Initial Patent Examination (571) 272-4000 or 1-800-PTO-9199

UNITED STATES PATENT AND TRADEMARK OFFICE

Commissioner for Patents
United States Patent and Trademark Office
P.O. Box 1450
Alexandria, VA 22313-1450
www.uspto.gov

BAKER & DANIELS LLP
300 NORTH MERIDIAN STREET
SUITE 2700
INDIANAPOLIS, IN 46204

COPY MAILED

JUL 17 2009

OFFICE OF PETITIONS

In re Application of :
Nigam ARORA :
Application No. 10/319,083 : DECISION ON PETITION
Filed: December 13, 2002 : TO WITHDRAW
Attorney Docket No. KCM001 FROM RECORD
:

This is a decision on the Request to Withdraw as attorney or agent of record under 37 C.F.R. § 1.36(b), filed June 24, 2009.

The request is **NOT APPROVED**.

A grantable request to withdraw as attorney/agent of record must be signed by every attorney/agent seeking to withdraw or contain a clear indication that one attorney is signing on behalf of another/others. The Office requires the practitioner(s) requesting withdrawal to certify that he, she, or they have: (1) given reasonable notice to the client, prior to the expiration of the response period, that the practitioner(s) intends to withdraw from employment; (2) delivered to the client or a duly authorized representative of the client all papers and property (including funds) to which the client is entitled; and (3) notified the client of any responses that may be due and the time frame within which the client must respond, pursuant 37 CFR 10.40(c).

The request cannot be approved because the attorneys of record were not appointed by registration numbers, as indicated.

All future communications from the Office will continue to be directed to the above-listed address until otherwise notified by applicant.

Telephone inquiries concerning this decision should be directed to the undersigned at 571-272-6735.

Diane Goodwyn
Petitions Examiner
Office of Petitions

cc: MR. NIGAM AROR,
KNOWLEDGE CM, INC.
9652 BAYVIEW COURT
INDIANAPOLIS, IN 46256

UNITED STATES PATENT AND TRADEMARK OFFICE

Commissioner for Patents
United States Patent and Trademark Office
P.O. Box 1450
Alexandria, VA 22313-1450
www.uspto.gov

BAKER & DANIELS LLP
300 NORTH MERIDIAN STREET
SUITE 2700
INDIANAPOLIS, IN 46204

COPY MAILED

AUG 0 4 2009

OFFICE OF PETITIONS

In re Application of	:	
Nigam ARORA	:	
Application No. 10/319,083	:	DECISION ON PETITION
Filed: December 13, 2002	:	TO WITHDRAW
Attorney Docket No. KCM001	:	FROM RECORD
	:	

This is a decision on the Request to Withdraw as attorney or agent of record under 37 C.F.R. § 1.36(b), filed July 23, 2009.

The request is **APPROVED**.

A grantable request to withdraw as attorney/agent of record must be signed by every attorney/agent seeking to withdraw or contain a clear indication that one attorney is signing on behalf of another/others. The Office requires the practitioner(s) requesting withdrawal to certify that he, she, or they have: (1) given reasonable notice to the client, prior to the expiration of the response period, that the practitioner(s) intends to withdraw from employment; (2) delivered to the client or a duly authorized representative of the client all papers and property (including funds) to which the client is entitled; and (3) notified the client of any responses that may be due and the time frame within which the client must respond, pursuant 37 CFR 10.40(c).

The request was signed by Kevin R. Erdman on behalf of all attorneys of record.

All attorneys of record have been withdrawn.

Applicant is reminded that there is no attorney of record at this time.

The correspondence address of record has been changed and the new correspondence address is the address indicated below, until otherwise properly notified by the applicant.

Telephone inquiries concerning this decision should be directed to the undersigned at 571-272-6735.

/Diane Goodwyn/
Petitions Examiner
Office of Petitions

cc: NIGAM ARORA
KNOWLEDGE CM, INC.
9652 BAYVIEW COURT
INDIANAPOLIS, IN 46256

UNITED STATES PATENT AND TRADEMARK OFFICE

UNITED STATES DEPARTMENT OF COMMERCE
United States Patent and Trademark Office
Address: COMMISSIONER FOR PATENTS
P.O. Box 1450
Alexandria, Virginia 22313-1450
www.uspto.gov

APPLICATION NUMBER	FILING OR 371(C) DATE	FIRST NAMED APPLICANT	ATTY. DOCKET NO./TITLE
10/319,083	12/13/2002	Nigam Arora	KCM001

CONFIRMATION NO. 1164

POWER OF ATTORNEY NOTICE

27268
BAKER & DANIELS LLP
300 NORTH MERIDIAN STREET
SUITE 2700
INDIANAPOLIS, IN 46204

OC000000037201200

Date Mailed: 08/04/2009

NOTICE REGARDING CHANGE OF POWER OF ATTORNEY

This is in response to the Power of Attorney filed 07/23/2009.

- The withdrawal as attorney in this application has been accepted. Future correspondence will be mailed to the new address of record. 37 CFR 1.33.

/dcgoodwyn/

Office of Data Management, Application Assistance Unit (571) 272-4000, or (571) 272-4200, or 1-888-786-0101

UNITED STATES PATENT AND TRADEMARK OFFICE

Commissioner for Patents
United States Patent and Trademark Office
P.O. Box 1450
Alexandria, VA 22313-1450
www.uspto.gov

HAYNES AND BOONE, LLP
901 MAIN STREET, SUITE 3100
DALLAS, TX 75202

COPY MAILED

MAY 25 2004

OFFICE OF PETITIONS

In re Application of

Lee, et al.

Application No. 10/319,112

Filed: December 13, 2002

Attorney Docket No: 24061.12/TSMC2002-1008

DECISION ON PETITION

This is a decision on the petition under 37 CFR 1.10 filed, May 3, 2004.

The petition is **dismissed.**

Any request for reconsideration of this decision must be submitted within TWO (2) MONTHS from the mail date of this decision. Extensions of time under 37 CFR 1.136(a) are permitted. The reconsideration request should include a cover letter entitled "Renewed Petition" under 37 CFR 1.10."

The instant petition was filed to correct what petitioner believed was an incorrect filing date accorded the above-cited application. Petitioner maintains that the correct filing date for the application should be December 12, 2002, not the currently accorded date of December 13, 2002.

Section 1.10(a) of the Title 37 of the Code of Federal Regulations indicates that correspondence received by the Patent and Trademark Office that was delivered by Express Mail will be considered filed in the Office on the date of deposit with the United States Postal Service. Where there is a discrepancy between the date of deposit as shown on the Express Mail label and the filing date accorded the correspondence by the Office, 37 CFR 1.10(c) provides that an applicant may petition to have the Commissioner accord the correspondence a filing date as of the "date in" on Express Mail label. In accordance with 37 CFR 1.10(c), a successful petition must:

> (1) . . . be filed promptly after the person becomes aware that the Office has accorded or will accord a filing date other than the USPS deposit date;

2) [provide] the number on the Express Mail mailing label was placed on a paper(s) or fee(s) that constituted the correspondence prior to the original mailing by Express Mail; and

(3) . . . include a true copy of the Express Mail mailing label showing the date-in and of any other official notation by the USPS relied upon to show the date of deposit.

The instant petition does not satisfy the requirements of item (3) above.

Relative to item (3) above, a true copy of Express Mail label EV177607948US was not found with the petition papers. An Express Mail certificate as prepared by petitioner was found, but does satisfy the requirement of item (3) above that specifically requires a true copy of the Express Mail label. A copy of the Express Mail certificate must accompany any renewed petition filed.

Deposit account 08-1394 will be charged $130.00 for the instant petition fee.

Further correspondence with respect to this matter should be addressed as follows:

By mail: Mail Stop Petitions
Commissioner for Patents
Box 1450
Alexandria, VA 22313-1450

By facsimile: (703) 872-9306
Attn: Office of Petitions

Telephone inquiries concerning this decision should be directed to the undersigned at (703) 305-0010.

Kenya A. McLaughlin

Kenya A. McLaughlin
Petitions Attorney
Office of Petitions

UNITED STATES PATENT AND TRADEMARK OFFICE

COMMISSIONER FOR PATENT
UNITED STATES PATENT AND TRADEMARK OFFIC
P.O. BOX 1450
ALEXANDRIA, VA 22313-1450
WWW.USPTO.GO

Paper No. 5

JOAN PENNINGTON
UNIT 1804
535 NORTH MICHIGAN AVENUE
CHICAGO, IL 60611

COPY MAILED

JUN 1 1 2003

OFFICE OF PETITIONS

In re Application of :
Thomas Barnes et al :
Application No. 10/319,143 :
Filed: December 13, 2002 :
Attorney Docket No. LX24D2 :

NOTICE

This is a notice regarding your request for acceptance of a fee deficiency submission under 37 CFR 1.28. On September 1, 1998, the Court of Appeals for the Federal Circuit held that 37 CFR 1.28(c) is the sole provision governing the time for correction of the erroneous payment of the issue fee as a small entity. **See DH Technology v. Synergystex International, Inc. 154 F.3d 1333, 47 USPQ2d 1865 (Fed. Cir. Sept. 1, 1998).**

The Office no longer investigates or rejects original or reissue applications under 37 CFR 1.56. **1098 Off. Gaz. Pat. Office 502 (January 3, 1989).** Therefore, nothing in this Notice is intended to imply that an investigation was done.

Your fee deficiency submission under 37 CFR 1.28 is hereby **ACCEPTED**.

Inquiries related to this communication should be directed to the Office of Petitions Staff at (703) 305-9285.

This file is being forwarded to Technology Center 1700.

Irvin Dingle
Petitions Examiner
Office of Petitions
Office of the Deputy Commissioner
for Patent Examination Policy

UNITED STATES PATENT AND TRADEMARK OFFICE

Commissioner for Patents
United States Patent and Trademark Office
P.O. Box 1450
Alexandria, VA 22313-1450
www.uspto.gov

COPY MAILED

OCT 0 2 2006

OFFICE OF PETITIONS

MARINA PORTNOVA
BLAKELY, SOKOLOFF, TAYLOR &
ZAFMAN LLP
SEVENTH FLOOR
12400 WILSHIRE BOULEVARD
LOS ANGELES CA 90025-1026

In re Application of :
Xun Xu :DECISION GRANTING FILING
Application No. 10/319,145 :DATE OF DECEMBER 12, 2002
Filed: December 12, 2002 :
Attorney Docket No. 080398.P537 :

This is a decision on the petition filed April 27, 2006, requesting that the above-identified application be accorded a filing date of December 12, 2002 rather than the presently accorded date of December 13, 2002.

Petitioner requests the earlier filing date on the basis that the application was purportedly deposited with the U.S. Postal Service (USPS) as Express Mail on December 12, 2002 pursuant to 37 CFR 1.10. In support, petitioner has submitted a copy of Express Mail label No. EL867634245US showing a stamped date of December 12, 2002. The same Express Mail receipt number appears on the original "Utility Patent Application Transmittal."

In view of the above, it is concluded that the application was deposited as "Express Mail" with the USPS on December 12, 2002.

The petition is **granted**.

Telephone inquiries specific to this decision on petition should be directed to Karen Creasy at (571) 272-3208.

This matter is being referred to the Office of Initial Patent Examination for processing with a filing date of **December 12, 2002** and for mailing of a corrected filing receipt.

Karen Creasy
Petitions Examiner
Office of Petitions

UNITED STATES PATENT AND TRADEMARK OFFICE

UNITED STATES DEPARTMENT OF COMMERCE
United States Patent and Trademark Office
Address: COMMISSIONER FOR PATENTS
P.O. Box 1450
Alexandria, Virginia 22313-1450
www.uspto.gov

APPL NO.	FILING OR 371 (c) DATE	ART UNIT	FIL FEE REC'D	ATTY.DOCKET NO	DRAWINGS	TOT CLMS	IND CLMS
10/319,145	12/12/2002	2624	1142	080398.P537	16	33	5

CONFIRMATION NO. 9447

CORRECTED FILING RECEIPT

OC000000020745549

Marina Portnova
BLAKELY, SOKOLOFF, TAYLOR & ZAFMAN LLP
Seventh Floor
12400 Wilshire Boulevard
Los Angeles, CA 90025-1026

Date Mailed: 10/10/2006

Receipt is acknowledged of this regular Patent Application. It will be considered in its order and you will be notified as to the results of the examination. Be sure to provide the U.S. APPLICATION NUMBER, FILING DATE, NAME OF APPLICANT, and TITLE OF INVENTION when inquiring about this application. Fees transmitted by check or draft are subject to collection. Please verify the accuracy of the data presented on this receipt. **If an error is noted on this Filing Receipt, please mail to the Commissioner for Patents P.O. Box 1450 Alexandria Va 22313-1450. Please provide a copy of this Filing Receipt with the changes noted thereon. If you received a "Notice to File Missing Parts" for this application, please submit any corrections to this Filing Receipt with your reply to the Notice. When the USPTO processes the reply to the Notice, the USPTO will generate another Filing Receipt incorporating the requested corrections (if appropriate).**

Applicant(s)

Xun Xu, San Jose, CA;

Power of Attorney:

Robert Cogan--25049
Roger Blakely Jr--25831
Norman Zafman--26250
Eric Hyman--30139
James Scheller Jr--31195
Lester Vincent--31460
William Kidd--31772
George Hoover II--32992
Gordon Lindeen III--33192
James Salter--35668

Domestic Priority data as claimed by applicant

Foreign Applications

If Required, Foreign Filing License Granted: 01/29/2003

The country code and number of your priority application, to be used for filing abroad under the Paris Convention, is US10/319,145

Projected Publication Date: Not Applicable

Non-Publication Request: No

Early Publication Request: No

Title

Multiple thresholding for video frame segmentation

Preliminary Class

382

PROTECTING YOUR INVENTION OUTSIDE THE UNITED STATES

Since the rights granted by a U.S. patent extend only throughout the territory of the United States and have no effect in a foreign country, an inventor who wishes patent protection in another country must apply for a patent in a specific country or in regional patent offices. Applicants may wish to consider the filing of an international application under the Patent Cooperation Treaty (PCT). An international (PCT) application generally has the same effect as a regular national patent application in each PCT-member country. The PCT process **simplifies** the filing of patent applications on the same invention in member countries, but **does not result** in a grant of "an international patent" and does not eliminate the need of applicants to file additional documents and fees in countries where patent protection is desired.

Almost every country has its own patent law, and a person desiring a patent in a particular country must make an application for patent in that country in accordance with its particular laws. Since the laws of many countries differ in various respects from the patent law of the United States, applicants are advised to seek guidance from specific foreign countries to ensure that patent rights are not lost prematurely.

Applicants also are advised that in the case of inventions made in the United States, the Director of the USPTO must issue a license before applicants can apply for a patent in a foreign country. The filing of a U.S. patent application serves as a request for a foreign filing license. The application's filing receipt contains further information and guidance as to the status of applicant's license for foreign filing.

Applicants may wish to consult the USPTO booklet, "General Information Concerning Patents" (specifically, the section entitled "Treaties and Foreign Patents") for more information on timeframes and deadlines for filing foreign patent applications. The guide is available either by contacting the USPTO Contact Center at 800-786-9199, or it can be viewed on the USPTO website at http://www.uspto.gov/web/offices/pac/doc/general/index.html.

For information on preventing theft of your intellectual property (patents, trademarks and copyrights), you may wish to consult the U.S. Government website, http://www.stopfakes.gov. Part of a Department of Commerce initiative, this website includes self-help "toolkits" giving innovators guidance on how to protect intellectual property in specific countries such as China, Korea and Mexico. For questions regarding patent enforcement issues, applicants may call the U.S. Government hotline at 1-866-999-HALT (1-866-999-4158).

LICENSE FOR FOREIGN FILING UNDER
Title 35, United States Code, Section 184
Title 37, Code of Federal Regulations, 5.11 & 5.15

GRANTED

The applicant has been granted a license under 35 U.S.C. 184, if the phrase "IF REQUIRED, FOREIGN FILING LICENSE GRANTED" followed by a date appears on this form. Such licenses are issued in all applications where the conditions for issuance of a license have been met, regardless of whether or not a license may be required as set forth in 37 CFR 5.15. The scope and limitations of this license are set forth in 37 CFR 5.15(a) unless an earlier license has been issued under 37 CFR 5.15(b). The license is subject to revocation upon written notification. The date indicated is the effective date of the license, unless an earlier license of similar scope has been granted under 37 CFR 5.13 or 5.14.

This license is to be retained by the licensee and may be used at any time on or after the effective date thereof unless it is revoked. This license is automatically transferred to any related applications(s) filed under 37 CFR 1.53(d). This license is not retroactive.

The grant of a license does not in any way lessen the responsibility of a licensee for the security of the subject matter as imposed by any Government contract or the provisions of existing laws relating to espionage and the national security or the export of technical data. Licensees should apprise themselves of current regulations especially with respect to certain countries, of other agencies, particularly the Office of Defense Trade Controls, Department of State (with respect to Arms, Munitions and Implements of War (22 CFR 121-128)); the Bureau of Industry and Security, Department of Commerce (15 CFR parts 730-774); the Office of Foreign Assets Control, Department of Treasury (31 CFR Parts 500+) and the Department of Energy.

NOT GRANTED

No license under 35 U.S.C. 184 has been granted at this time, if the phrase "IF REQUIRED, FOREIGN FILING LICENSE GRANTED" DOES NOT appear on this form. Applicant may still petition for a license under 37 CFR 5.12, if a license is desired before the expiration of 6 months from the filing date of the application. If 6 months has lapsed from the filing date of this application and the licensee has not received any indication of a secrecy order under 35 U.S.C. 181, the licensee may foreign file the application pursuant to 37 CFR 5.15(b).

UNITED STATES PATENT AND TRADEMARK OFFICE

Commissioner for Patents
United States Patent and Trademark Office
P.O. Box 1450
Alexandria, VA 22313-1450
www.uspto.gov

Paper No.

GKN DRIVELINE
NORTH AMERICA, INC
3300 UNIVERSITY DRIVE
AUBURN HILLS MI 48326

COPY MAILED
JUN 26 2006
OFFICE OF PETITIONS

In re Application of :
Lyon et al. : DECISION ON PETITION
Application No. 10/319,153 :
Filed: December 14, 2002 :
Attorney Docket No. G-00341/US:

This is a decision on the PETITION TO WITHDRAW HOLDING OF ABANDONMENT filed February 2, 2006.

The petition under § 1.181 is **GRANTED**.

The above-identified application became abandoned for failure to file a reply to the final Office action mailed June 6, 2005. This Office action set a shortened statutory period for reply of three (3) months, with extensions of time obtainable under § 1.136(a). No reply considered timely filed and no extension of time considered obtained, the application became abandoned effective September 7, 2005. A courtesy Notice of Abandonment was mailed on January 9, 2006.

Applicants contend that a timely response was filed by facsimile transmission on August 3, 2005. In support thereof, applicants submit a copy of the response as filed, a copy of their facsimile confirmation sheet confirming successful transmission, and a copy of the USPTO auto-reply acknowledging receipt of a facsimile transmission sent to the Office's Centralized Facsimile number.

Petitioner's evidence and arguments have been considered and it is concluded that the requirements of 37 CFR § 1.8(b) have been

met. The response is considered timely filed by facsimile transmission on August 3, 2005.

In view thereof, the Notice of Abandonment mailed January 9, 2006 is hereby **vacated**, and the holding of abandonment is **withdrawn**.

No fee is required on petition under § 1.181.

Technology Center AU 3617 has been advised of this decision. The application file is, thereby, forwarded to the Technology Center's technical support staff to withdraw the holding of abandonment and for consideration by the examiner of the response previously filed on August 3, 2005 and resubmitted on petition filed February 2, 2006.

Telephone inquiries specific to this matter should be directed to the undersigned at (571) 272-3219.

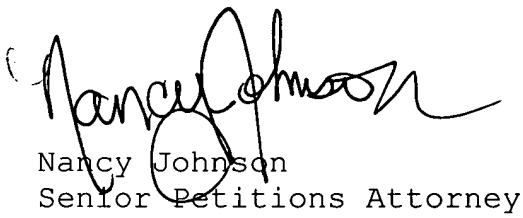

Nancy Johnson
Senior Petitions Attorney
Office of Petitions

UNITED STATES PATENT AND TRADEMARK OFFICE

Commissioner for Patents
United States Patent and Trademark Office
P.O. Box 1450
Alexandria, VA 22313-1450
www.uspto.gov

Eugene E. Renz, Jr.
205 North Monroe Street
Media, PA 19063

COPY MAILED

JUN 13 2008

OFFICE OF PETITIONS

In re Application of :
Thomas K. Mason :
Application No. 10/319,159 : ON PETITION
Filed: December 13, 2002 :
Attorney Docket No. :

This is a decision on the petition under the unintentional provisions of 37 CFR 1.137(b), filed January 23, 2008, to revive the above-identified application.

The petition is **GRANTED**.

The application became abandoned for failure to properly reply in a timely manner to the final Office action mailed, February 22, 2006, which set a shortened statutory period for reply of three (3) months. No extensions of time under the provisions of 37 CFR 1.136(a) were obtained. Accordingly, the application became abandoned on May 23, 2006. A Notice of Abandonment was mailed on September 14, 2006.

The petition satisfies the requirements of 37 CFR 1.137(b) in that petitioner has supplied (1) the reply in the form of a Notice of Appeal and fee of $255 (2) the petition fee of $770 and (3) a proper statement of unintentional delay. Accordingly the Notice of Appeal is accepted as being unintentionally delayed.

The two-month period for filing an appeal brief under 37 CFR 41.37 (accompanied by the fee required by 37 CFR 41.20(b)(2)), runs from the date of this decision.

Telephone inquiries concerning this decision should be directed to Kimberly Inabinet at (571) 272-4618.

This application is being referred to Technology Center AU 1743 to await the filing of an appeal brief or for such other appropriate reply as may be submitted to continue prosecution of the application.

Carl Friedman
Petitions Examiner
Office of Petitions

UNITED STATES PATENT AND TRADEMARK OFFICE

UNITED STATES DEPARTMENT OF COMMERCE
United States Patent and Trademark Office
Address: COMMISSIONER FOR PATENTS
P.O. Box 1450
Alexandria, Virginia 22313-1450
www.uspto.gov

APPLICATION NUMBER	FILING OR 371(C) DATE	FIRST NAMED APPLICANT	ATTY. DOCKET NO./TITLE
10/319,159	12/13/2002	Thomas K. Mason	

CONFIRMATION NO. 9570

POWER OF ATTORNEY NOTICE

J. Andrew McKinney , Jr.
Suite 600
2 Hopkins Plaza
Baltimore, MD 21201

OC000000029490220

Date Mailed: 04/21/2008

NOTICE REGARDING CHANGE OF POWER OF ATTORNEY

This is in response to the Power of Attorney filed 01/23/2008.

- The Power of Attorney to you in this application has been revoked by the assignee who has intervened as provided by 37 CFR 3.71. Future correspondence will be mailed to the new address of record(37 CFR 1.33).

/kainabinet/

Office of Data Management, Application Assistance Unit (571) 272-4000, or (571) 272-4200, or 1-888-786-0101

SPE RESPONSE FOR CERTIFICATE OF CORRECTION

Paper No.: _____

DATE : 10/12/06

TO SPE OF : ART UNIT 1713

SUBJECT : Request for Certificate of Correction for Appl. No.: **10/319162** Patent No.: **6849695**

Please respond to this request for a certificate of correction within 7 days.

Please review the requested changes/corrections as shown in the **COCIN** document(s) in the IFW application image. No new matter should be introduced, nor should the scope or meaning of the claims be changed.

Please complete the response (see below) and forward the completed response to scanning using document code **COCX**.

Angela Green
Certificates of Correction Branch
703.308.9380 ext. 123

Thank You For Your Assistance

The request for issuing the above-identified correction(s) is hereby:
Note your decision on the appropriate box.

- [X] **Approved** — **All** changes apply.
- [ ] **Approved in Part** — Specify below which changes **do not** apply.
- [ ] **Denied** — State the reasons for denial below.

Comments: _____

_____

_____

_____

_____

_____ 1713
SPE **Art Unit**

UNITED STATES PATENT AND TRADEMARK OFFICE

COMMISSIONER FOR PATENTS
UNITED STATES PATENT AND TRADEMARK OFFICE
P.O. BOX 1450
ALEXANDRIA, VA 22313-1450
WWW.USPTO.GOV

Paper No. 7

TOWNSEND AND TOWNSEND AND CREW
TWO EMBARCADERO CENTER
8TH FLOOR
SAN FRANCISCO CA 94111-3834

COPY MAILED

JUL 15 2003

OFFICE OF PETITIONS

In re Application of
Arti Arora et al
Application No. 10/319,182
Filed: December 13, 2002
Attorney Docket No. 020512-000210US

: DECISION ON PETITION
: UNDER 37 CFR 1.78(a)(6)

This is a decision on the petition under 37 CFR 1.78(a)(6), filed June 10, 2003, to accept an unintentionally delayed claim under 35 U.S.C. §119(e) for the benefit of prior-filed provisional Application No. 60/341,129, filed December 13, 2001.

The petition is **Granted.**

A petition under 37 CFR 1.78(a)(6) is only applicable to those applications filed on or after November 29, 2000. Further, the petition is appropriate only after expiration of the period specified in 37 CFR 1.78(a)(5)(ii) and must be filed during the pendency of the nonprovisional application. In addition, the petition must be accompanied by:

(1) the surcharge set forth in 37 CFR 1.17(t);

(2) a statement that the entire delay between the date the claim was due under 37 CFR 1.78(a)(5)(ii) and the date the claim was filed was unintentional; and

(3) the reference to the prior-filed provisional application supplied in an application data sheet (ADS)(37 CFR 1.76) or as an amendment in the first sentence of the specification following the title. *See* 35 U.S.C. 119(e) and 37 CFR 1.78(a)(5)(iii). The Commissioner may require additional information where there is a question whether the delay was unintentional.

The instant pending nonprovisional application was filed on December 13, 2002, within twelve months of the filing date of the prior-filed provisional application, Application No. 60/341,129, which was filed on December 13, 2001, for which priority is claimed. A reference to the prior-filed provisional application has been included in an application data sheet.

The instant nonprovisional application was filed after November 29, 2000, and the claim for priority herein is submitted after expiration of the period specified in 37 CFR 1.78(a)(5)(ii). Also, the reference to the prior-filed provisional application was submitted during the pendency of the nonprovisional application for which the benefit is sought. *See* 35 U.S.C. §119(e). Accordingly, having found that the instant petition satisfies the conditions of 37 CFR 1.78(a)(6) for acceptance of an unintentionally delayed claim for priority under 35 U.S.C. §119(e), the petition to accept an unintentionally delayed claim of benefit to prior-filed provisional Application No. 60/341,129 is granted.

The granting of the petition to accept the delayed benefit claim to the prior application under 37 CFR 1.78(a)(6) should not be construed as meaning that the instant application is entitled to the benefit of the filing date of the prior application. In order for the instant application to be entitled to the benefit of the prior application, all other requirements under 35 U.S.C. §119(e) and 37 CFR 1.78(a)(4) and (a)(5) must be met. Accordingly, the examiner will, in due course, consider this benefit claim and determine whether the instant application is entitled to the benefit of the earlier filing date.

A corrected Filing Receipt, which includes the priority claim to the prior-filed provisional application, accompanies this decision on petition.

Any inquiries concerning this decision may be directed to Karen Creasy at (703) 305-8859.

The application is being forwarded to Technology Center AU 3623 for consideration by the examiner of the claim under 35 U.S.C. §119(e) for the benefit of priority to prior-filed provisional Application No. 60/341,129, filed December 13, 2001.

Frances Hicks
Lead Petitions Examiner
Office of Petitions
Office of the Deputy Commissioner
for Patent Examination Policy

ATTACHMENT: Corrected Filing Receipt

UNITED STATES PATENT AND TRADEMARK OFFICE

Commissioner for Patents
United States Patent and Trademark Office
P.O. Box 1450
Alexandria, VA 22313-1450
www.uspto.gov

TOWNSEND AND TOWNSEND AND CREW, LLP
TWO EMBARCADERO CENTER, EIGHTH FLOOR
SAN FRANCISCO CA 94111-3834

COPY MAILED
DEC 22 2008

In re Application of :
Arti **ARORA, et al.** :
Application No. 10/319,182 :
Filed: December 13, 2002 :
Attorney Docket No. **020512-000210US** :

DECISION ON PETITION TO
WITHDRAW FROM RECORD

This is a decision on the Request to Withdraw as attorney or agent of record under 37 C.F.R. § 1.36(b), filed October 1, 2008.

The request is **APPROVED**.

A grantable request to withdraw as attorney/agent of record must be signed by every attorney/agent seeking to withdraw or contain a clear indication that one attorney is signing on behalf of another/others. A request to withdraw will not be approved unless at least 30 (thirty) days would remain between the date of approval and the later of the expiration date of a time to file a response or the expiration date of the maximum time period which can be extended under 37 C.F.R. § 1.136(a).

The request was signed by Gerald T. Gray on behalf of all attorneys of record. All attorneys/agents associated have been withdrawn. Applicant is reminded that there is no attorney of record at this time.

The request to change the correspondence of record is not acceptable as the requested correspondence address is not that of: (1) the first named signing inventor; or (2) an intervening assignee of the entire interest under 37 C.F.R 3.71. All future communications from the Office will be directed to the first named signing inventor Arti Arora at the first copied address below until otherwise properly notified by the applicant.

There is an outstanding non-final Office action mailed July 18, 2008 that requires a reply from the applicant.

Telephone inquiries concerning this decision should be directed to the undersigned at 571-272-7253.

/Monica A. Graves/
Petitions Examiner
Office of Petitions

cc: **ARTI ARORA**
20118 FOREST AVENUE
CUPERTINO, CA 95014

cc: **VALENTI HANLEY & ROBINSON, PLLC**
ONE RIVERFRONT PLAZA
401 W. MAIN STREET
LOUISVILLE, KY 40202

UNITED STATES PATENT AND TRADEMARK OFFICE

Commissioner for Patents
United States Patent and Trademark Office
P.O. Box 1450
Alexandria, VA 22313-1450
www.uspto.gov

COPY MAILED

MAY 27 2008

OFFICE OF PETITIONS

STALLMAN & POLLOCK, LLP
353 SACRAMENTO STREET
SUITE 2200
SAN FRANCISCO, CA 94111

In re Patent No. 6,982,791 :
Issue Date: January 3, 2006 :
Application No. 10/319,189 : NOTICE
Filed: December 13, 2002 :
Patentee(s): Jon Opsal :

This is a notice regarding your request for acceptance of a fee deficiency submission under 37 CFR 1.28, filed February 25, 2008. On September 1, 1998, the Court of Appeals for the Federal Circuit held that 37 CFR 1.28(c) is the sole provision governing the time for correction of the erroneous payment of the issue fee as a small entity. **See DH Technology v. Synergystex International, Inc. 154 F.3d 1333, 47 USPQ2d 1865 (Fed. Cir. Sept. 1, 1998).**

The Office no longer investigates or rejects original or reissue applications under 37 CFR 1.56. **1098 Off. Gaz. Pat. Office 502 (January 3, 1989).** Therefore, nothing in this Notice is intended to imply that an investigation was done.

Your fee deficiency submission under 37 CFR 1.28 is hereby **ACCEPTED**. Therefore, status as a small entity has been removed and all future fees paid must be paid at the large entity rate.

Inquiries related to this communication should be directed to the undersigned at (571) 272-3226.

Andrea Smith
Petitions Examiner
Office of Petitions

UNITED STATES PATENT AND TRADEMARK OFFICE

Commissioner for Patents
United States Patent and Trademark Office
P.O. Box 1450
Alexandria, VA 22313-1450
www.uspto.gov

EXXONMOBIL CHEMICAL COMPANY
P O BOX 2149
BAYTOWN, TX 77522-2149

COPY MAILED

AUG 1 0 2004

OFFICE OF PETITIONS

In re Application of	:	
Dan-Cheng Kong	:	
Application No. 10/319,202	:	DECISION GRANTING PETITION
Filed: December 13, 2002	:	UNDER 37 CFR 1.313(c)(2)
Attorney Docket No. 2002B178	:	

This is a decision on the petition, filed August 9, 2004, under 37 CFR 1.313(c)(2) to withdraw the above-identified application from issue after payment of the issue fee.

The petition is **GRANTED**.

The above-identified application is withdrawn from issue for consideration of a submission under 37 CFR 1.114 (request for continued examination). See 37 CFR 1.313(c)(2).

Petitioner is advised that the issue fee paid on May 25, 2004 in the above-identified application cannot be refunded. If, however, the above-identified application is again allowed, petitioner may request that it be applied towards the issue fee required by the new Notice of Allowance.[1]

Telephone inquiries should be directed to the undersigned at (703) 305-8680.

This matter is being referred to Technology Center AU 1773 for processing of the request for continued examination under 37 CFR 1.114 and for consideration of the concurrently filed Information Disclosure Statement.

Frances Hicks
Petitions Examiner
Office of Petitions
Office of the Deputy Commissioner
for Patent Examination Policy

[1] The request to apply the issue fee to the new Notice may be satisfied by completing and returning the new Issue Fee Transmittal Form PTOL-85(b), which includes the following language thereon: "Commissioner for Patents is requested to apply the Issue Fee and Publication Fee (if any) or re-apply any previously paid issue fee to the application identified above." Petitioner is advised that, whether a fee is indicated as being due or not, the Issue Fee Transmittal Form **must** be completed and timely submitted to avoid abandonment. Note the language in bold text on the first page of the Notice of Allowance and Fee(s) Due (PTOL-85).

PTO/SB/66 (03-09)
Approved for use through 03/31/2012. OMB 0651-0016
U.S. Patent and Trademark Office: U.S. DEPARTMENT OF COMMERCE
Under the Paperwork Reduction Act of 1995, no persons are required to respond to a collection of information unless it displays valid OMB control number.

PETITION TO ACCEPT UNINTENTIONALLY DELAYED PAYMENT OF MAINTENANCE FEE IN AN EXPIRED PATENT (37 CFR 1.378(c))

Patent Number	Issue Date (YYYY-MM-DD)	Application Number	Filing Date (YYYY-MM-DD)	Docket Number (if applicable)
6869883	2005-03-22	10319214	2002-12-13	P14741

CAUTION: Maintenance fee (and surcharge, if any) payment must correctly identify: (1) the patent number and (2) the application number of the actual U.S. application leading to issuance of that patent to ensure the fee(s) is/are associated with the correct patent. 37 CFR 1.366(c) and (d).

SMALL ENTITY

☐ Patentee claims, or has previously claimed, small entity status. See 37 CFR 1.27.

LOSS OF ENTITLEMENT TO SMALL ENTITY STATUS

☐ Patentee is no longer entitled to small entity status. See 37 CFR 1.27(g)

NOT Small Entity

	Fee	Code
◉	3 ½ year	(1551)
○	7 ½ year	(1552)
○	11 ½ year	(1553)

Small Entity

	Fee	Code
○	3 ½ year	(2551)
○	7 ½ year	(2552)
○	11 ½ year	(2553)

SURCHARGE

The surcharge required by 37 CFR 1.20(i)(2) (Fee Code 1558) must be paid as a condition of accepting unintentionally delayed payment of the maintenance fee.

MAINTENANCE FEE (37 CFR 1.20(e)-(g))

The appropriate maintenance fee must be submitted with this petition.

STATEMENT

THE UNDERSIGNED CERTIFIES THAT THE DELAY IN PAYMENT OF THE MAINTENANCE FEE TO THIS PATENT WAS UNINTENTIONAL

PETITIONER(S) REQUEST THAT THE DELAYED PAYMENT OF THE MAINTENANCE FEE BE ACCEPTED AND THE PATENT REINSTATED

THIS PORTION MUST BE COMPLETED BY THE SIGNATORY OR SIGNATORIES

37 CFR 1.378(d) states: "Any petition under this section must be signed by an attorney or agent registered to practice before the Patent and Trademark Office, or by the patentee, the assignee, or other party in interest."

I certify, in accordance with 37 CFR 1.4(d)(4) that I am

◉ An attorney or agent registered to practice before the Patent and Trademark Office

○ A sole patentee

○ A joint patentee; I certify that I am authorized to sign this submission on behalf of all the other patentees.

○ A joint patentee; all of whom are signing this e-petition

○ The assignee of record of the entire interest

Patent Practitioner			
A signature of the applicant or representative is required in accordance with 37 CFR 1.33 and 10.18. Please see 37 CFR 1.4(d) for the form of the signature			
Signature	/Jeffrey S. Draeger/	Date (YYYY-MM-DD)	2009-11-02
Name	/Jeffrey S. Draeger/	Registration Number	41000

This collection of information is required by 37 CFR 1.378(c). The information is required to obtain or retain a benefit by the public which is to file (and by the USPTO to process) an application. Confidentiality is governed by 35 U.S.C. 122 and 37 CFR 1.11 and 1.14. This collection is estimated to take 1 hour to complete, including gathering, preparing, and submitting the completed application form to the USPTO. Time will vary depending upon the individual case. Any comments on the amount of time you require to complete this form and/ or suggestions for reducing this burden, should be sent to the Chief Information Officer, U.S. Patent and Trademark Office, U.S. Department of Commerce, P.O. Box 1450, Alexandria, VA 22313-1450. DO NOT SEND FEES OR COMPLETED FORMS TO THIS ADDRESS. **This form can only be used when in conjunction with EFS-Web. If this form is mailed to the USPTO, it may cause delays in reinstating the patent.**

Privacy Act Statement

The Privacy Act of 1974 (P.L. 93-579) requires that you be given certain information in connection with your submission of the attached form related to a patent application or patent. Accordingly, pursuant to the requirements of the Act, please be advised that: (1) the general authority for the collection of this information is 35 U.S.C. 2(b)(2); (2) furnishing of the information solicited is voluntary; and (3) the principal purpose for which the information is used by the U.S. Patent and Trademark Office is to process and/or examine your submission related to a patent application or patent. If you do not furnish the requested information, the U.S. Patent and Trademark Office may not be able to process and/or examine your submission, which may result in termination of proceedings or abandonment of the application or expiration of the patent.

The information provided by you in this form will be subject to the following routine uses:

1. The information on this form will be treated confidentially to the extent allowed under the Freedom of Information Act (5 U.S.C. 552) and the Privacy Act (5 U.S.C. 552a). Records from this system of records may be disclosed to the Department of Justice to determine whether the Freedom of Information Act requires disclosure of these records.

2. A record from this system of records may be disclosed, as a routine use, in the course of presenting evidence to a court, magistrate, or administrative tribunal, including disclosures to opposing counsel in the course of settlement negotiations.

3. A record in this system of records may be disclosed, as a routine use, to a Member of Congress submitting a request involving an individual, to whom the record pertains, when the individual has requested assistance from the Member with respect to the subject matter of the record.

4. A record in this system of records may be disclosed, as a routine use, to a contractor of the Agency having need for the information in order to perform a contract. Recipients of information shall be required to comply with the requirements of the Privacy Act of 1974, as amended, pursuant to 5 U.S.C. 552a(m).

5. A record related to an International Application filed under the Patent Cooperation Treaty in this system of records may be disclosed, as a routine use, to the International Bureau of the World Intellectual Property Organization, pursuant to the Patent Cooperation Treaty.

6. A record in this system of records may be disclosed, as a routine use, to another federal agency for purposes of National Security review (35 U.S.C. 181) and for review pursuant to the Atomic Energy Act (42 U.S.C. 218(c)).

7. A record from this system of records may be disclosed, as a routine use, to the Administrator, General Services, or his/her designee, during an inspection of records conducted by GSA as part of that agency's responsibility to recommend improvements in records management practices and programs, under authority of 44 U.S.C. 2904 and 2906. Such disclosure shall be made in accordance with the GSA regulations governing inspection of records for this purpose, and any other relevant (i.e., GSA or Commerce) directive. Such disclosure shall not be used to make determinations about individuals.

8. A record from this system of records may be disclosed, as a routine use, to the public after either publication of the application pursuant to 35 U.S.C. 122(b) or issuance of a patent pursuant to 35 U.S.C. 151. Further, a record may be disclosed, subject to the limitations of 37 CFR 1.14, as a routine use, to the public if the record was filed in an application which became abandoned or in which the proceedings were terminated and which application is referenced by either a published application, an application open to public inspections or an issued patent.

9. A record from this system of records may be disclosed, as a routine use, to a Federal, State, or local law enforcement agency, if the USPTO becomes aware of a violation or potential violation of law or regulation.

UNITED STATES PATENT AND TRADEMARK OFFICE

Commissioner for Patents
United States Patent and Trademark Office
P.O. Box 1450
Alexandria, VA 22313-1450
www.uspto.gov

In re Patent No. 6869883
Issue Date: March 22,2005
Application No. 10319214
Filed: December 13,2002
Attorney Docket No. ITO.0523US (P14741)

:
:DECISION GRANTING PETITION
:UNDER 37 CFR 1.378(c)
:

This is a decision on the electronic petition, filed November 3,2009 ,under 37 CFR 1.378(c) to accept the unintentionally delayed payment of the 3.5 year maintenance fee for the above-identified patent.

The petition is **GRANTED**.

The maintenance fee is accepted, and the above-identified patent reinstated as of November 3,2009 . This decision also constitutes notice that the fee has been accepted. An electronic copy of the petition and this decision has been created as an entry in the Image File Wrapper. Nevertheless, petitioner should print and retain an independent copy.

Telephone inquiries related to this electronic decision should be directed to the Electronic Business Center at 1-866-217-9197.

UNITED STATES PATENT AND TRADEMARK OFFICE

Commissioner for Patents
United States Patent and Trademark Office
P.O. Box 1450
Alexandria, VA 22313-1450
www.uspto.gov

JEFFREY PEARCE
34825 SULTAN-STARTUP ROAD
SULTAN, WA 98294

COPY MAILED

NOV 0 8 2007

OFFICE OF PETITIONS

In re Application of
NELSON, Michael
Application No. 10/319,217
Filed: December 12, 2002
Attorney Docket No. **VMWARE21**

DECISION ON REQUEST FOR REVOCATION OF POWER OF ATTORNEY

This is a decision on the Request to Revoke the attorney or agent of record under 37 C.F.R. § 1.36(a), filed June 4, 2007.

The request is **APPROVED.**

A power of attorney, pursuant to § 1.32(b), may be revoked at any stage in the proceeding of a case by an applicant for patent (§ 1.41(b)) or an assignee of the entire interest of the applicant under § 3.71(b). Fewer than all of the applicants (or by fewer than the assignee of the entire interest of the applicant) may only revoke the power of attorney upon a showing of sufficient cause, and payment of the petition fee set forth § 1.17(h). For the assignee to take action a proper statement under § 3.73(b) is required.

The correspondence address of record has been changed and the new correspondence address is the address indicated below.

Telephone inquiries concerning this decision should be directed to the undersigned at (571) 272-7253.

Monica A. Graves
Petitions Examiner
Office of Petitions

cc: **VMWARE / JEFFREY PEARCE**
DARRYL SMITH
3401 HILLVIEW AVENUE
PALO ALTO, CA 94304

UNITED STATES PATENT AND TRADEMARK OFFICE

Commissioner for Patents
United States Patent and Trademark Office
P.O. Box 1450
Alexandria, VA 22313-1450
www.uspto.gov

VMWARE
JEFFREY PEARCE/DARRYL SMITH
3401 HILLVIEW AVENUE
PALO ALTO, CA 94304

COPY MAILED

NOV 2 0 2007

OFFICE OF PETITIONS

In re Application of :
NELSON, Michael :
Application No. 10/319,217 :
Filed: December 12, 2002 :
Attorney Docket No. VMware21 :

DECISION ON PETITION

This is a decision on the petition under 37 CFR 1.137(b), filed June 4, 2007, to revive the above-identified application.

The petition is **GRANTED.**

The application became abandoned for failure to reply in a timely manner to the non-final Office action mailed, December 21, 2005, which set a shortened statutory period for reply of three (3) months. No extensions of time under the provisions of 37 CFR 1.136(a) were obtained. Accordingly, the application became abandoned on March 22, 2006.

The petition satisfies the requirements of 37 CFR 1.137(b) in that petitioner has supplied (1) the reply in the form of an amendment; (2) the petition fee of $1500; and (3) an adequate statement of unintentional delay.

It is noted that the address given on the petition differs from the address of record. If appropriate, a change of address should be filed in accordance with MPEP 601.03. A courtesy copy of this decision is being mailed to the address given on the petition; however, the Office will mail all future correspondence solely to the address of record.

Telephone inquiries concerning this decision should be directed to Monica A. Graves at (571) 272-7253.

The application file is being referred to Technology Center Art Unit 2194 for consideration of the amendment filed June 4, 2007

Sherry D. Brinkley
Petitions Examiner
Office of Petitions

cc: DARRYL A. SMITH
3145 PORTER DRIVE
PALO ALTO, CA 94304

UNITED STATES PATENT AND TRADEMARK OFFICE

Commissioner for Patents
United States Patent and Trademark Office
P.O. Box 1450
Alexandria, VA 22313-1450
www.uspto.gov

DONGXIAO YUE
30324 MERIDIEN CIR
UNION CITY, CA 94587

COPY MAILED

JAN 14 2010

In re Application of	:	
Dongxiao Yue	:	
Application No. 10/319,226	:	DECISION ON PETITION
Filed: December 12, 2002	:	
Attorney Docket No. None	:	

This is a decision on the petition, filed August 17, 2009, which is being treated as a petition under 37 CFR 1.8(b), requesting withdrawal of the holding of abandonment in the above-identified application.

The petition is **GRANTED**.

This application was held abandoned for failure to timely respond to the Office action of January 9, 2008, which set a three (3) month shortened statutory period for reply. Accordingly, a reply was due on or before April 9, 2008.

Petitioner states that a timely reply was mailed via certificate of mailing on May 9, 2008, which included the following papers: an amendment. Petitioner has submitted a copy of the previously mailed certificate which bears a certificate of mailing dated May 9, 2008, which would render the reply timely.

A review of the file record indicates that a one (1) month extension of time was filed on April 9, 2008 which makes the response filed May 9, 2008, via certificate of mailing timely.

The file record does include the originally submitted response, however it does not include the certificate of mailing. Failure to receive correspondence which includes a certificate of mailing or certificate of facsimile transmission is addressed in 37 CFR 1.8(b), reproduced below:

> In the event that correspondence is considered timely filed by being mailed or transmitted in accordance with paragraph (a) of this section, but not received in the U.S. Patent and Trademark Office after a reasonable amount of time has elapsed from the time of mailing or transmitting of the correspondence, or after the application is held to be abandoned, or after the proceeding is dismissed, terminated, or decided with prejudice, the correspondence will be considered timely if the party who forwarded such correspondence:

(1) Informs the Office of the previous mailing or transmission of the correspondence promptly after becoming aware that the Office has no evidence of receipt of the correspondence;

(2) Supplies an additional copy of the previously mailed or transmitted correspondence and certificate; and

(3) Includes a statement which attests on a personal knowledge basis or to the satisfaction of the Director to the previous timely mailing or transmission. If the correspondence was sent by facsimile transmission, a copy of the sending unit's report confirming transmission may be used to support this statement.

The petition satisfies the above requirements of 37 CFR 1.8(b). Accordingly, the holding of abandonment for failure to timely file a reply to the Office action of January 9, 2008, is hereby withdrawn and the application restored to pending status.

This application is being referred to Technology Center AU 2445 for appropriate action in the normal course of business on the reply received with petition.

Telephone inquiries concerning this decision should be directed to Alicia Kelley at (571) 272 6059.

Chris Bottorff
Petitions Examiner
Office of Petitions

UNITED STATES PATENT AND TRADEMARK OFFICE

COMMISSIONER FOR PATENTS
UNITED STATES PATENT AND TRADEMARK OFFICE
P.O. BOX 1450
ALEXANDRIA, VA 22313-1450
www.uspto.gov

Paper No. 11

WADDEY & PATTERSON
414 UNION STREET, SUITE 2020
BANK OF AMERICA PLAZA
NASHVILLE, TN 37219-

COPY MAILED

NOV 2 1 2003

OFFICE OF PETITIONS

In re Application of :
Lindbo :
Application No. 10/319,227 : ON PETITION
Filed: December 13, 2002 :
Attorney Docket No. 34309 :

This decision concerns the November 5, 2003 "Petition to Correct Filing Date on Updated Filing Receipt" which is being properly treated as a petition under 37 CFR 1.53 that the above-referenced application be accorded a filing date of December 13, 2002.

The petition is **GRANTED.**

Background

On December 13, 2002, the application was filed.

On March 4, 2003, the Office of Initial Patent Examination (OIPE) mailed a "Notice to Comply with Requirements for Patent Applications Containing Nucleotide Sequence and/or Amino Acid Sequence Disclosure" ("3/4/03 Notice"), stating, *inter alia*,[1] that a Figure 8A described in the specification appeared to have been omitted from the application as filed.

In response, on April 28, 2003, Applicant submitted a drawing labeled "Figure 8A," along with a "Preliminary Amendment" adding the drawing to the application. Rather than disputing the 3/4/03 Notice with respect to the omitted drawing, the April 28, 2003 submission indicated that the content of the omitted Figure 8A had been incorporated by reference into the instant application. The April 28, 2003 submission did not request a later filing date.

On May 29, 2003, an Updated Filing Receipt was mailed, changing the filing date to April 28, 2003.

The instant petition requests that the original filing date of December 13, 2002 be restored.

---

[1] The notice also indicated non-compliance with sequence listing requirements under 37 CFR 1.821-1.825, which has no bearing on the application filing date.

Discussion

Upon review of the file, the Office agrees that the application papers filed on December 13, 2002, **which did not include a drawing of Figure 8A**, is entitled to that filing date.

In addition, the instant application is a continuation-in-part of Application No. 10/286,549. The December 13, 2003 application transmittal and the first sentence of the specification both incorporate Application No. 10/286,549 in its entirety into the instant application.

Under MPEP 201.06(c) (Rev. 1, Feb. 2003), " . . . an applicant may incorporate by reference the prior application by including, in the application-as-filed, a statement that such specifically enumerated prior application or applications are "hereby incorporated herein by reference." The statement may appear in the specification or in the application transmittal letter . . . The inclusion of this incorporation by reference of the prior application(s) will permit an applicant to amend the continuation . . . application to include any subject matter in such prior application(s), without the need for a petition provided the continuation application is entitled to a filing date notwithstanding the incorporation by reference." (emphasis added)

Therefore, the drawing of Figure 8A may be entered into the instant application through an amendment, which Applicant properly did on April 28, 2003.

In view of the above, the petition is granted.

The April 28, 2003 Preliminary Amendment will be considered by the primary examiner to ensure that Figure 8A does not constitute new matter with respect to the parent application.

Given that the instant petition is not necessitated by Applicant's mistake, the $130 petition fee has been credited to Deposit Account No. 23-0035 as authorized in the petition.

The application is being returned to OIPE for further processing with a filing date of December 13, 2002; for mailing a corrected Filing Receipt reflecting that filing date; and for indication in the USPTO records that 25 sheets of drawings (**not including the drawing for Figure 8A**) were present on filing. Upon completion of pre-examination, the application will be forwarded to Technology Center 1600 for examination in due course.

Telephone inquiries should be directed to Petitions Attorney RC Tang at (703) 308-0763.

Christina T. Donnell

Christina T. Donnell
Senior Attorney
Office of Petitions
Office of the Commissioner for Patents

OIPE JC17
MAY 16 2005
PATENT & TRADEMARK OFFICE

3761

PTO/SB/83 (09-04)
Approved for use through 11/30/2005. OMB 0651-0035
U.S. Patent and Trademark Office; U.S. DEPARTMENT OF COMMERCE
Under the Paperwork Reduction Act of 1995, no persons are required to respond to a collection of information unless it displays a valid OMB control number.

REQUEST FOR WITHDRAWAL AS ATTORNEY OR AGENT AND CHANGE OF CORRESPONDENCE ADDRESS

Application Number	10/319,260
Filing Date	12/13/02
First Named Inventor	Andrew Cragg
Art Unit	3761
Examiner Name	Kidwell, Michele M.
Attorney Docket Number	034298-151

To: Commissioner for Patents
P.O. Box 1450
Alexandria, VA 22313-1450

Please withdraw me as attorney or agent for the above identified patent application, and

☒ all the attorneys/agents of record.

☐ all the attorneys/agents (with registration numbers) listed on the attached paper(s), or

☐ all the attorneys/agents associated with Customer Number

NOTE: This box can only be checked when the power of attorney of record in the application is to all the practitioners associated with a customer number.

The reasons for this request are: client transfer

CORRESPONDENCE ADDRESS

1. ☐ The correspondence address is NOT affected by this withdrawal.

2. ☒ Change the correspondence address and direct all future correspondence to:

☐ The address associated with Customer Number:

OR

☒ Firm or Individual Name	Thomas Miller, Esq. Marshall, Gerstein & Borun				
Address	233 South Wacker Drive 6300 Sears Tower				
City	Chicago	State	IL	ZIP	60606-6402
Country	USA				
Telephone	312.474.6300	Fax	312.474.0448		
Signature					
Name	Adrienne Yeung	Registration No.	44,000		
Date	5/12/05	Telephone No.	408-292-5800		

NOTE: Withdrawal is effective when approved rather than when received. Unless there are at least 30 days between approval of withdrawal and the expiration date of a time period for response or possible extension period, the request to withdraw is normally disapproved.

This collection of information is required by 37 CFR 1.36. The information is required to obtain or retain a benefit by the public which is to file (and by the USPTO to process) an application. Confidentiality is governed by 35 U.S.C. 122 and 37 CFR 1.11 and 1.14. This collection is estimated to take 12 minutes to complete, including gathering, preparing, and submitting the completed application form to the USPTO. Time will vary depending upon the individual case. Any comments on the amount of time you require to complete this form and/or suggestions for reducing this burden, should be sent to the Chief Information Officer, U.S. Patent and Trademark Office, U.S. Department of Commerce, P.O. Box 1450, Alexandria, VA 22313-1450. DO NOT SEND FEES OR COMPLETED FORMS TO THIS ADDRESS. SEND TO: **Commissioner for Patents, P.O. Box 1450, Alexandria, VA 22313-1450.**

6/16/05 DMC
APPROVED MCS

UNITED STATES PATENT AND TRADEMARK OFFICE

UNITED STATES DEPARTMENT OF COMMERCE
United States Patent and Trademark Office
Address: COMMISSIONER FOR PATENTS
P.O. Box 1450
Alexandria, Virginia 22313-1450
www.uspto.gov

CROMPTON, SEAGER & TUFTE, LLC
1221 NICOLLET AVENUE
SUITE 800
MINNEAPOLIS, MN 55403-2420

Mail Date: 04/21/2010

Applicant	: Andrew H. Cragg	: DECISION ON REQUEST FOR
Patent Number	: 7611479	: RECALCULATION of PATENT
Issue Date	: 11/03/2009	: TERM ADJUSTMENT IN VIEW
Appliction No	: 10/319,260	: OF WYETH AND NOTICE OF INTENT TO
Filed	: 12/13/2002	: ISSUE CERTIFICATE OF CORRECTION
		:

The Request for Recalculation is **GRANTED** to the extent indicated.

The patent term adjustment has been determined to be **368** days. The USPTO will *sua sponte* issue a certificate of correction reflecting the amount of PTA days determined by the recalculation.

Prior to the issuance of the certificate of correction, the USPTO will afford patentee an opportunity to be heard and request reconsideration. Accordingly, patentee has **one month or thirty (30) days**, whichever is longer, to file a request for reconsideration of this patent term adjustment calculation. See 35 U.S.C. 154(b)(3)(B)(ii) and 37 CFR 1.322(a)(4). No extensions of time will be granted under 37 CFR 1.136.

Patentee should use document code PET.OP if electronically filing a request for reconsideration of this patent term adjustment calculation. The patentee must also include the information required by 37 CFR 1.705(b)(2) and the fee required by 37 CFR 1.18(e). If patentee does not file a timely request for reconsideration of this patent term adjustment calculation including the information required by 37 CFR 1.705(b)(2) and the fee required by 37 CFR 1.18(e), the USPTO will issue a certificate of correction reflecting the PTA determination noted above.

Patentee should be aware that in order to preserve the right to review in the United States District Court for the District of Columbia of the USPTO patent term adjustment determination, patentee must ensure that he or she also take the steps required under 35 U.S.C. 154(b)(4)(A) in a timely manner. Nothing in the request for recalculation should be construed as providing an alternative time frame for commencing a civil action under 35 U.S.C. 154(b)(4)(A).

Any questions concerning this decision should be directed to the Office of Patent Legal Administration at 571-272-7702.

UNITED STATES PATENT AND TRADEMARK OFFICE

UNITED STATES DEPARTMENT OF COMMERCE
United States Patent and Trademark Office
Address: COMMISSIONER FOR PATENTS
P.O. Box 1450
Alexandria, Virginia 22313-1450
www.uspto.gov

IBM CORPORATION
3039 CORNWALLIS RD.
DEPT. T81 / B503, PO BOX 12195
RESEARCH TRIANGLE PARK, NC 27709

Mail Date: 04/20/2010

Applicant	: Dermot Flaherty	: DECISION ON REQUEST FOR
Patent Number	: 7580979	: RECALCULATION of PATENT
Issue Date	: 08/25/2009	: TERM ADJUSTMENT IN VIEW
Appliction No	: 10/319,268	: OF WYETH AND NOTICE OF INTENT TO
Filed	: 12/13/2002	: ISSUE CERTIFICATE OF CORRECTION
		:

The Request for Recalculation is **GRANTED** to the extent indicated.

The patent term adjustment has been determined to be **1061** days. The USPTO will *sua sponte* issue a certificate of correction reflecting the amount of PTA days determined by the recalculation.

Prior to the issuance of the certificate of correction, the USPTO will afford patentee an opportunity to be heard and request reconsideration. Accordingly, patentee has **one month or thirty (30) days**, whichever is longer, to file a request for reconsideration of this patent term adjustment calculation. See 35 U.S.C. 154(b)(3)(B)(ii) and 37 CFR 1.322(a)(4). No extensions of time will be granted under 37 CFR 1.136.

Patentee should use document code PET.OP if electronically filing a request for reconsideration of this patent term adjustment calculation. The patentee must also include the information required by 37 CFR 1.705(b)(2) and the fee required by 37 CFR 1.18(e). If patentee does not file a timely request for reconsideration of this patent term adjustment calculation including the information required by 37 CFR 1.705(b)(2) and the fee required by 37 CFR 1.18(e), the USPTO will issue a certificate of correction reflecting the PTA determination noted above.

Patentee should be aware that in order to preserve the right to review in the United States District Court for the District of Columbia of the USPTO patent term adjustment determination, patentee must ensure that he or she also take the steps required under 35 U.S.C. 154(b)(4)(A) in a timely manner. Nothing in the request for recalculation should be construed as providing an alternative time frame for commencing a civil action under 35 U.S.C. 154(b)(4)(A).

Any questions concerning this decision should be directed to the Office of Patent Legal Administration at 571-272-7702.

UNITED STATES PATENT AND TRADEMARK OFFICE

Commissioner for Patents
United States Patent and Trademark Office
P.O. Box 1450
Alexandria, VA 22313-1450
www.uspto.gov

CNH AMERICA, LLC
INTELLECTUAL PROPERTY LAW DEPARTMENT
PO BOX 1895, M.S. 641
NEW HOLLAND, PA 17557

COPY MAILED

SEP 0 9 2005

OFFICE OF PETITIONS

In re Application of :
Edward A. Blakeslee, et. al. :
Application No. 10/319,291 : ON PETITION
Filed: December 14, 2002 :
Attorney Docket No. 17168 :

This is a decision on the petition under 37 CFR 1.137(b), filed June 28, 2005, to revive the above-identified application.

The Office hereby acknowledges receipt of an authorization to charge $1,500 for the petition to revive fee, five (5) sheets of formal drawings containing Figures 1-10, and the statement of unintentional delay.

As authorized, the above petition fee has been charged to petitioner's deposit account.

Since petitioner has met the requirements to revive this application, pursuant to 37 CFR 1.137(b), the petition is **GRANTED**.

The file does not indicate a change of address has been submitted, although the address given on the petition differs from the address of record. If appropriate, a change of address should be filed in accordance with MPEP 601.03. A courtesy copy of this decision is being mailed to the address given on the petition; however, the Office will mail all future correspondence solely to the address of record.

This application is being referred to the Office of Publications for further processing into a patent.

Telephone inquiries concerning this decision should be directed to the undersigned at (571) 272-3226.

Andrea Smith
Petitions Examiner
Office of Petitions
Office of the Deputy Commissioner
for Patent Examination Policy

cc: John B. Mitchell
324 Harvest Drive
Lititz, PA 17543

UNITED STATES PATENT AND TRADEMARK OFFICE

COMMISSIONER FOR PATENTS
UNITED STATES PATENT AND TRADEMARK OFFICE
P.O. BOX 1450
ALEXANDRIA, VA 22313-1450
www.uspto.gov

GIBBONS, DEL DEO, DOLAN, GRIFFINGER & VECCHIONE
1 RIVERFRONT PLAZA
NEWARK, NJ 07102-5497

COPY MAILED

JUN 27 2005

OFFICE OF PETITIONS

In re Application of :
Richard J. Mackool :
Application No. 10/319,302 :
Filed: December 13, 2002 :
Attorney Docket No. 103471-48093 :

ON PETITION

This is a decision on the petition, filed June 20, 2005, under 37 CFR 1.313(c)(2) to withdraw the above-identified application from issue after payment of the issue fee.

The petition is **GRANTED**.

The above-identified application is withdrawn from issue for consideration of a submission under 37 CFR 1.114 (request for continued examination). See 37 CFR 1.313(c)(2).

Petitioner is advised that the issue fee paid on March 21, 2005, in the above-identified application, cannot be refunded. If, however, the above-identified application is again allowed, petitioner may request that it be applied towards the issue fee required by the new Notice of Allowance. [1]

Telephone inquiries relating to this decision should be directed to the undersigned at (571) 272-3204.

The application is being referred to Technology Center AU 3762 for further processing of the request for continued examination under 37 CFR 1.114.

Sherry D. Brinkley
Petitions Examiner
Office of Petitions

[1]The request to apply the issue fee to the new Notice may be satisfied by completing and returning the new Issue Fee Transmittal Form PTOL-85(b), which includes the following language thereon: "Commissioner for Patents is requested to apply the Issue Fee and Publication Fee (if any) or re-apply any previously paid issue fee to the application identified above." Petitioner is advised that, whether a fee is indicated as being due or not, the Issue Fee Transmittal Form **must** be completed and timely submitted to avoid abandonment. Note the language in bold text on the first page of the Notice of Allowance and Fee(s) Due (PTOL-85).

UNITED STATES PATENT AND TRADEMARK OFFICE

Commissioner for Patents
United States Patent and Trademark Office
P.O. Box 1450
Alexandria, VA 22313-1450
www.uspto.gov

MAIL

JUN 0 3 2005

DIRECTOR OFFICE
TECHNOLOGY CENTER 2600

MICHAEL D. STEIN
WOODCOCK, WASHBURN, KURTZ, MACKIEWICZ & NORRIS
ONE LIBERTY PLACE
46TH FLOOR
PHILADELPHIA, PA 19103

In re Application of :
YANEY, et al. :
Application No. 10/319,317 : DECISION ON REQUEST TO
Filed: December 13, 2002 : WITHDRAW AS ATTORNEY
For: A POWER LINE COMMUNICATIONS :
SYSTEM AND METHOD OF USING THE SAME

This is a decision on the request for withdrawal as attorney/agent and change of correspondence address filed on April 8, 2005.

A grantable request to withdraw as attorney/agent of record must do the following:
(1) indicate the present mailing address of the attorney(s)/agent(s) who seek(s) to withdraw, and
(2) be signed by each attorney/agent seeking to withdraw or clearly be signed on their behalf, and
(3) be *approved* at least thirty (30) days prior to the maximum extendable period for response to any outstanding Office Action, and
(4) indicate the address to which future correspondence should be mailed.

Requester meets the condition set forth above. Accordingly, the request is **GRANTED**.
All attorney/agents listed in the withdrawal have been withdrawn.

All future communications from the Office will be directed to the address listed below until otherwise notified by applicant. Applicant is reminded of the obligation to promptly notify the Patent and Trademark Office of any change in correspondence address to ensure receipt of all communications from the Office.

Kenneth Wieder
Special Program Examiner
Technology Center 2600
Communications
(571) 272-2986

cc: MANELLI DENISON & SELTER
2000 M STREET, N.W.
SUITE 700
WASHINGTON, D.C. 20036-3307

UNITED STATES PATENT AND TRADEMARK OFFICE

NOV 14 2005

Commissioner for Patents
United States Patent and Trademark Office
P.O. Box 1450
Alexandria, VA 22313-1450
www.uspto.gov

LERNER, DAVID, LITTENBERG,
KRUMHOLZ & MENTLIK
600 SOUTH AVENUE WEST
WESTFIELD, NJ 07090

In re Application of
BULLEN, ANDREW G.
Appl No.: 10/319,336
Filed: December 13, 2002
For: COMBINATION ADVERTISING CARD AND COLLAR STAY
Attorney Docket Number: BULLEN 3.0-001

DECISION GRANTING PETITION
37 CFR 1.181

This is a decision on petitioner's request filed February 2, 2005 to review the holding of abandonment, mailed January 21, 2005 for failure to timely reply to the office action mailed December 23, 2003. In view of petitioner's comments, the petition is considered pursuant to 37 CFR 1.181. No fee is required for this petition.

The petition is granted.

In support of the request, petitioner has submitted a copy of a response (including a petition for a three-month extension of time) and a copy of a PTO stamped post card receipt dated June 1, 2004.

In view of the above, the Notice of Abandonment mailed January 21, 2005 is in error and is hereby vacated. The holding of abandonment is withdrawn. The application will be forwarded to the Technical Support Staff to return the application to an active status and to enter the amendment. The application will then be forwarded to the examiner for consideration of the amendment dated June 1, 2004.

Richard A. Bertsch, Director
Technology Center 3700

SPE RESPONSE FOR CERTIFICATE OF CORRECTION

DATE : 8/27/08

Paper No.: —

TO SPE OF : ART UNIT 1635

SUBJECT : Request for Certificate of Correction for Appl. No.: 10/319341 Patent No.: 7195916 B2

Please respond to this request for a certificate of correction within 7 days.

FOR IFW FILES:

Please review the requested changes/corrections as shown in the **COCIN** document(s) in the IFW application image. No new matter should be introduced, nor should the scope or meaning of the claims be changed.

Please complete the response (see below) and forward the completed response to scanning using document code **COCX**.

FOR PAPER FILES:

Please review the requested changes/corrections as shown in the attached certificate of correction. Please complete this form (see below) and forward it with the file to:

Certificates of Correction Branch (CofC)
South Tower - 9A22
Palm Location 7580

Virginia Tolbert
Certificates of Correction Branch
703-308-9390 ext. 113

Thank You For Your Assistance

The request for issuing the above-identified correction(s) is hereby:
Note your decision on the appropriate box.

- ☒ **Approved** — **All** changes apply.
- ☐ **Approved in Part** — Specify below which changes **do not** apply.
- ☐ **Denied** — State the reasons for denial below.

Comments: _____

/James Douglas Schultz/ — **SPE**

1635 — **Art Unit**

UNITED STATES PATENT AND TRADEMARK OFFICE

Commissioner for Patents
United States Patent and Trademark Office
P.O. Box 1450
Alexandria, VA 22313-1450
www.uspto.gov

MAILED
FROM DIRECTORS OFFICE

APR 15 2005

TECHNOLOGY CENTER 3600

LERNER AND GREENBERG, PA
P O BOX 2480
HOLLYWOOD FL 33022-2480

In re application of: :
Benedikt Wintermann :
Application No. 10/319,345 :
Filed: December 13, 2002 :
For: CONTROL ROD DRIVE FOR A NUCLEAR REACTOR AND METHOD FOR MOVING A CONTROL ROD INTO A NUCLEAR REACTOR CORE OF A NUCLEAR REACTOR

DECISION ON PETITION
FILED UNDER
37 CFR 1.181

This is in response to the petition filed on January 28, 2005 for entry of evidence in an Appeal Brief.

The petition is **GRANTED**.

The summary of events leading to this petition is clearly set forth on pages 2-4 of applicant's petition.

Applicant has provided sufficient reasoning as to why the Schőb reference could not have been earlier presented.

The application is currently with the examiner for consideration of the Appeal Brief filed on January 18, 2005 and will be acted on in turn.

Any question concerning this decision should be referred to SPE Michael Carone at (571) 272-6873.

Donald Hajec, Director
Technology Center 3600
(571) 272-5150
/mjc:

UNITED STATES PATENT AND TRADEMARK OFFICE

COMMISSIONER FOR PATENTS
UNITED STATES PATENT AND TRADEMARK OFFICE
WASHINGTON, D.C. 20231
www.uspto.gov

Paper No. 6

William M. Lee, Jr.
Barnes & Thornburg
PO Box 2786
Chicago, IL 60690-2786

COPY MAILED

APR 0 1 2003

OFFICE OF PETITIONS

In re Application of :
Vandensande :
Application No. 10/319,347 : ON PETITION
Filed: December 13, 2002 :
Attorney Docket No. 522-1823 :

This is a decision on the petition filed February 24, 2003, to accord the above-identified application a filing date of December 13, 2002, instead of December 16, 2002.

The petition is **granted**.

37 CFR 1.10(d) states:

> Any person filing correspondence under this section that was received by the Office and delivered by the "Express Mail Post Office to Addressee" service of the USPS, who can show that the "date-in" on the "Express Mail" mailing label or other official notation entered by the USPS was incorrectly entered or omitted by the USPS, may petition the Commissioner to accord the correspondence a filing date as of the date the correspondence is shown to have been deposited with the USPS, provided that:
>
> (1) The petition is filed promptly after the person becomes aware that the Office has accorded, or will accord, a filing date based upon an incorrect entry by the USPS;
>
> (2) The number of the "Express Mail" mailing label was placed on the paper(s) or fee(s) that constitute the correspondence prior to the original mailing by "Express Mail"; and
>
> (3) The petition includes a showing which establishes, to the satisfaction of the Commissioner, that the requested filing date was the date the correspondence was deposited in the "Express Mail Post Office to Addressee" service prior to the last scheduled pickup for that day. Any showing pursuant to this paragraph must be corroborated by evidence from the USPS or that came into being after deposit and within one business day of the deposit of the correspondence in the "Express Mail Post Office to Addressee" service of the USPS.

All of the above requirements have been met.

Petitioner has submitted a cash register receipt from the post office indicating the application was mailed on December 13, 2002. In addition, a search of an USPS database by the Patent Office indicates the application was mailed on December 13, 2002. A copy of the search result is attached. For these reasons, the application will be accorded a filing date of December 13, 2002.

The file is now being forwarded to the Office of Initial Patent Examination to accord the application a filing date of December 13, 2002.

Telephone inquiries should be directed to Petitions Attorney Steven Brantley at (703) 306-5683.

Charles Steven Brantley
Petitions Attorney
Office of Petitions

Attached: Result of search of an USPS database

UNITED STATES PATENT AND TRADEMARK OFFICE

COMMISSIONER FOR PATENTS
UNITED STATES PATENT AND TRADEMARK OFFICE
P.O. BOX 1450
ALEXANDRIA, VA 22313-1450
www.uspto.gov

Paper No. 8

William M. Lee, Jr.
Barnes & Thornburg
PO Box 2786
Chicago, IL 60690-2786

COPY MAILED

MAY 27 2003

OFFICE OF PETITIONS

In re Application of :
Vandensande :
Application No. 10/319,347 : ON PETITION
Filed: December 13, 2002 :
Attorney Docket No. 522-1823 :

This is a decision on the petition filed April 14, 2003 (Certificate of Mailing Date of April 7, 2003), to accord the above-identified application a filing date of December 13, 2002, instead of December 16, 2002.

The petition is **dismissed as moot**.

Petitioner filed a petition under 37 CFR 1.10 on February 24, 2003. The petition requested a filing date of December 13, 2002. The petition was granted and a decision was mailed to petitioner on April 1, 2003.

A copy of the April 1, 2003 decision is attached.

The file is now being forwarded to the Office of Initial Patent Examination for further processing.

Telephone inquiries should be directed to Petitions Attorney Steven Brantley at (703) 306-5683.

Charles Steven Brantley
Petitions Attorney
Office of Petitions

Attached: Copy of previous decision mailed on April 1, 2003

UNITED STATES PATENT AND TRADEMARK OFFICE

Commissioner for Patents
United States Patent and Trademark Office
P.O. Box 1450
Alexandria, VA 22313-1450
www.uspto.gov

ATHENIA YVONNE WRIGHT'CAMPBELL
2022 S. LARRY ST.
PHILADELPHIA PA 19142

COPY MAILED

JUN 21 2006

OFFICE OF PETITIONS

In re Application of
Athenia Yvonne King
Application No. 10/319,350
Filed: March 28, 2003
Title of Invention: **DISPOSABLE PAMPER WITH A DETACHABLE PLASTIC FECES CONTAINER**

DECISION ON PETITION

This is a decision on the petition to withdraw the holding of abandonment, filed March 7, 2005, which is treated under 37 CFR in accordance with the reasoning of the decision in Delgar Inc. v. Schuyler, 172 USPQ 513.

The petition under 37 CFR 1.181 is **DISMISSED**.

Any request for reconsideration of this decision must be submitted within **TWO (2) MONTHS** from the mail date of this decision. Extensions of time under 37 CFR 1.136(a) are permitted. The reconsideration request should include a cover letter entitled "Renewed Petition under 37 CFR 1.181," or, as explained in more detail below, "...under 37 CFR 1.137(a)" or (b). This is not a final agency decision.

This application became abandoned for failure to reply to the non-Final Office Action mailed August 3, 2005, which set a three (3) month period for reply. The instant petition and this decision precede the mailing of the Notice of Abandonment.

A non-Final Office Action was mailed December 13, 2004. The non-Final Office Action was re-mailed on August 3, 2005 however, petitioner asserts that it was not received. Petitioner argues that she has previously experienced problems with the mail service, that mail is sometimes placed in other peoples mail boxes. Since no response was timely filed, the application became abandoned November 4, 2005.

A review of the record indicates no irregularity in the mailing of the Office action, and in the absence of any irregularity in the mailing, there is a strong presumption that the Office action was properly mailed to the address of record. This presumption may be overcome by a showing that the Office action was not in fact received.

The showing required to establish the failure to receive an Office action must include a statement from the inventor that the Office communication was not received and attesting to the fact that a search of the docket records indicates that the Office communication was not received. A copy of the docket record where the non-received

Office communication would have been entered had it been received and docketed must be attached to and referenced in petitioner's statement.[1]

It is understood that petitioner is prosecuting this application as a *pro se* inventor and that *pro se* applicants may not have as elaborate a docketing system as a law firm. This does not warrant a total waiver of the requirement of a showing that includes copies of docket records or an adequate proxy for such copies. A *pro se* applicant should have some written records evidencing receipt of communications from and mailing of communications to the Office available to provide proof of nonreceipt. It is suggested that pro se applicants maintain a log of communications from and to the Office, with dates of receipt, due dates and mailing dates of responses and other papers filed noted. Furthermore, applicants may maintain entries on the file jackets noting these important dates. Absent such evidence, applicants may not be able to overcome the presumption that the correspondence was properly mailed and received at the correspondence address of record and thereafter, misplaced by applicants.

Neither the office action mailed December 13, 2004 nor the office action mailed August 3, 2005 were returned by the United States Postal Service. Petitioner must show that she is without fault in not receiving the communication and, a probability that the failure to receive mail properly addressed was that of the United States Postal Service, without additional proof, is insufficient.

ALTERNATIVE VENUE

Petitioner may wish to consider filing a renewed petition under 37 CFR 1.137(b),[2] which now provides that where the delay in reply was unintentional, a petition may be filed to revive an abandoned application or a lapsed patent pursuant to 37 CFR 1.137(b).

---

[1]M.P.E.P. § 711.03(c); See Notice entitled "Withdrawing the Holding of Abandonment When Office Actions Are Not Received," 1156 O.G. 53 (November 16, 1993).

[2]Effective December 1, 1997, the provisions of 37 CFR 1.137(b) now provide that where the delay in reply was unintentional, a petition may be filed to revive an abandoned application or a lapsed patent pursuant to 37 CFR 1.137(b). A grantable petition filed under the provisions of 37 CFR 1.137(b) must be accompanied by:

(1) the required reply, unless previously filed. In a nonprovisional application abandoned for failure to prosecute, the required reply may be met by the filing of a continuing application. In a nonprovisional application filed on or after June 8, 1995, and abandoned for failure to prosecute, the required reply may also be met by the filing of a request for continued examination in compliance with § 1.114. In an application or patent, abandoned or lapsed for failure to pay the issue fee or any portion thereof, the required reply must be the payment of the issue fee or any outstanding balance thereof. In an application abandoned for failure to pay the publication fee, the required reply must include payment of the publication fee.

(2) the petition fee as set forth in 37 CFR 1.17(m);

(3) a statement that the entire delay in filing the required reply from the due date for the reply until the filing of a grantable petition pursuant to 37 CFR 1.137(b) was unintentional. The Commissioner may required additional information where there is a question whether the delay was unintentional; and

(4) any terminal disclaimer (and fee as set forth in 37 CFR 1.20(d)) required pursuant to 37 CFR 1.137(c)).

The filing of a petition under the unintentional standard cannot be intentionally delayed and therefore should be filed promptly. A person seeking revival due to unintentional delay cannot make a statement that the delay was unintentional unless the entire delay, including the delay from the date it was discovered that the application was abandoned until the filing of the petition to revive under 37 CFR 1.137(b), was unintentional. A statement that the delay was unintentional is not appropriate if petitioner intentionally delayed the filing of a petition for revival under 37 CFR 1.137(b).

Please note that the petition fee for a small entity under 37 CFR 1.137(b) is $750.00 and $1,500.00 for a large entity.

Finally, a review of USPTO records does reveal that there are in fact three applications filed by the instant petitioner. Provisional application 60/336,056 filed December 5, 2001 expired December 5, 2002. Non-provisional design application 29/173,544 was deposited December 31, 2002 but has never received a filing date and is now abandoned for failure to respond to the Notice of Incomplete Application mailed January 30, 2003. The instant application, 10/319,350 filed March 28, 2003, as is indicated above, will remain in an abandoned status until petitioner can prove that the office action was not received or that the failure to file a timely response was unintentional. There does not appear to be any confusion between the three applications other than the name of the inventor on the 10/319,350 application is listed as ATHENIA YVONNE KING but on the other two applications the name of the inventor is listed as ATHENIA YVONNE WRIGHT CAMPBELL. Additionally, the address of record on all three applications is listed as ATHENIA WRIGHT CAMPBELL 2022 S. LARRY STREET, PHILADELPHIA, PA 19142. Nonetheless, whether or not any of this has had any impact on petitioner's failure of receipt or failure to reply to the non-Final Office Action will have to be argued by petitioner. We will base any conclusions on arguments not proffered by the petitioner.

Further correspondence with respect to this matter should be addressed as follows:

By mail: Mail Stop Petitions
Commissioner for Patents
P.O. Box 1450
Alexandria VA 22313-1450

By FAX: (571) 273-8300
Attn: Office of Petitions

Telephone inquiries concerning this matter may be directed to the undersigned Petitions Attorney at (571) 272-3212.

Patricia Faison-Ball

Patricia Faison-Ball
Senior Petitions Attorney
Office of Petitions

UNITED STATES PATENT AND TRADEMARK OFFICE

Commissioner for Patents
United States Patent and Trademark Office
P.O. Box 1450
Alexandria, VA 22313-1450
www.uspto.gov

Paper No. 6

Hollis-Eden Pharmaceuticals, Inc.
4435 Eastgate Mall
Suite 400
San Diego, CA 92121

COPY MAILED

JUL 2 2 2003

OFFICE OF PETITIONS

In re Application of	:	
Ahlem et al.	:	
Application No. 10/319,356	:	DECISION GRANTING PETITION
Filed: December 13, 2002	:	
Attorney Docket No. 202.2C	:	

This is a decision on the petition filed June 30, 2003, requesting that the above-identified application be accorded a filing date of December 13, 2002, with Figures 1-6 as part of the original disclosure.

On December 13, 2002, applicants deposited the above-identified application. However, on May 27, 2003, the Office of Initial Patent Examination mailed a "Notice Of Incomplete Nonprovisional Application," requiring drawings of applicants' invention and stating that the filing date would be the date of receipt of the omitted drawings.

In response, on June 30, 2003, applicants filed, inter alia, the present petition, a copy of Figures 1-6, and paid the $130.00 petition fee. Applicants requested that the application, including Figures 1-6, be accorded a filing date of December 13, 2002. In the present petition, applicants stated that the above-referenced application is a continuation application of application No. 09/535,675. Applicants further stated that in the cross-reference to related applications at page 1 of the above-referenced application, application No. 09/535,675 was incorporated by reference. Applicants asserted that application No. 09/535,675 contained the same drawings that the above-identified application described in the brief description in paragraph 10 at pages 5-6.

It is noted that the specification indicated that this application is a continuation application of application No. 09/535,675, filed March 23, 2000, which is incorporated by reference.

Section 201.06(c) of the Manual of Patent Examining Procedure states that:

> . . . an applicant may incorporate by reference the prior application by including, in the application-as-filed, a statement that such specifically enumerated prior application or applications are "hereby incorporated herein by reference." The statement may appear in the specification or in the application transmittal letter. The inclusion of this incorporation by reference of the prior application(s) will permit an applicant to amend the continuing application to include any subject matter in such prior application(s), without the need for a petition. (emphasis supplied)

Obviously, in view of the incorporation by reference of application No. 09/535,675, Figures 1-6 are not new matter if they were part of the disclosure of the nonprovisional application.

Accordingly, the petition is granted.

The application file is being returned to the Office of Initial Patent Examination for further processing with a filing date of December 13, 2002, using Figures 1-6 submitted with the present petition.

Any inquiries related to this decision should be directed to the undersigned at (703) 306-5589.

Christina Tartera Donnell

Christina Tartera Donnell
Senior Petitions Attorney
Office of Petitions

UNITED STATES PATENT AND TRADEMARK OFFICE

Commissioner for Patents
United States Patent and Trademark Office
P.O. Box 1450
Alexandria, VA 22313-1450
www.uspto.gov

HOLLIS-EDEN PHARMACEUTICALS, INC.
4435 EASTGATE MALL
SUITE 400
SAN DIEGO CA 92121

COPY MAILED
MAY 0 1 2006
OFFICE OF PETITIONS

In re Application of :
Clarence N. Ahlem et al. :
Application No. 10/319,356 : ON PETITION
Filed: December 13, 2002 :
Attorney Docket No.: 202.2C

This is a decision on the petition filed February 27, 2006 under 37 CFR 1.137(b),[1] to revive the above-identified application.

The petition is **GRANTED**.

This application became abandoned for failure to timely reply to the non-Final Office Action mailed June 2, 2004. A shortened statutory period of three months was set for replying to the non-Final Office Action. No extensions of time having been requested, this application became abandoned September 3, 2004. Accordingly, a Notice of Abandonment was mailed February 27, 2006.

This matter is being referred to Technology Center 1616 for appropriate action on the amendment filed February 27, 2006.

Telephone inquiries concerning this matter should be directed to the undersigned Petitions Attorney at (571) 272-3212.

Patricia Faison-Ball
Senior Petitions Attorney
Office of Petitions

---

[1] Effective December 1, 1997, the provisions of 37 CFR 1.137(b) now provide that where the delay in reply was unintentional, a petition may be filed to revive an abandoned application or a lapsed patent pursuant to 37 CFR 1.137(b). A grantable petition filed under the provisions of 37 CFR 1.137(b) must be accompanied by:

(1) the required reply, unless previously filed. In a nonprovisional application abandoned for failure to prosecute, the required reply may be met by the filing of a continuing application. In a nonprovisional application filed on or after June 8, 1995, and abandoned for failure to prosecute, the required reply may also be met by the filing of a request for continued examination in compliance with § 1.114. In an application or patent, abandoned or lapsed for failure to pay the issue fee or any portion thereof, the required reply must be the payment of the issue fee or any outstanding balance thereof. In an application abandoned for failure to pay the publication fee, the required reply must include payment of the publication fee.

(2) the petition fee as set forth in 37 CFR 1.17(m);

(3) a statement that the entire delay in filing the required reply from the due date for the reply until the filing of a grantable petition pursuant to 37 CFR 1.137(b) was unintentional. The Commissioner may required additional information where there is a question whether the delay was unintentional; and

(4) any terminal disclaimer (and fee as set forth in 37 CFR 1.20(d)) required pursuant to 37 CFR 1.137(c)).

UNITED STATES PATENT AND TRADEMARK OFFICE

Commissioner for Patents
United States Patent and Trademark Office
P.O. Box 1450
Alexandria, VA 22313-1450
www.uspto.gov

Reising, Ethington, Barnes, Kisselle,
Learman & McCulloch, P.C.
5291 Colony Drive North
Saginaw, MI 48603

COPY MAILED

FEB 20 2007

OFFICE OF PETITIONS

In re Application of

Seaman, et al.

Application No. 10/319,367

Filed: December 13, 2002

Attorney Docket No.

DECISION ON PETITION

This is a decision on the petition under 37 CFR 1.137(b), filed August 11, 2006, to revive the above-identified application.

The petition is **GRANTED**.

The above-cited application became abandoned for failure to reply in a timely manner to the restriction/election requirement mailed July 15, 2004, which set a shortened period for reply of one (1) month from its mailing date. No extension of time pursuant to 37 CFR 1.136(a) was obtained within the statutory period. Accordingly, the application became abandoned on August 16, 2004.

The above-identified application has been abandoned for an extended period of time. The Patent and Trademark Office is relying on petitioner's duty of candor and good faith and accepting the statement that the entire delay in filing the required reply form the due date for the reply until the filing of a grantable petition pursuant to 37 CFR 1.137(b) was unintentional. See Changes to Patent Practice and Procedure, 62 Fed. Reg. at 53160 and 53178; 1203 Off. Gaz. Pat. Office at 88 and 103 (responses to comments 64 and 109) (applicant obligated under 37 CFR 10.18 to inquire into the underlying facts and circumstances when providing the statement required by 37 CFR 1.137(b) to the Patent and Trademark Office.

The restriction filed August 11, 2006, is noted.

The address as cited on the petition differs from the address of record. Although a courtesy copy of this decision is being mailed to the address cited on the petition, all future correspondence will be mailed solely to the address of record until appropriate written instructions to the contrary are received.

The application is being forwarded to Technology Center 3700, GAU 3725 for further processing.

Telephone inquiries concerning this decision should be directed to the undersigned at (571) 272-3222.

Kenya A. McLaughlin
Petitions Attorney
Office of Petitions

cc:
Eric T. Jones
Reising, Ethington, Barnes, Kisselle, PC
PO Box 4390
Troy, Michigan 48099-4390

United States Patent and Trademark Office

Commissioner for Patents
United States Patent and Trademark Office
P.O. Box 1450
Alexandria, VA 22313-1450
www.uspto.gov

John W. Eldredge
MYERS DAWES ANDRAS & SHERMAN
19900 MacArthur Boulevard, Suite 1150
Irvine, CA 92612

COPY MAILED

JUL 22 2005

OFFICE OF PETITIONS

ON PETITION

In re Application of
ROBERT H. SELZER ET AL.
Application No.: 10/319,382
Filed: 13 December 2003
Attorney Docket No.: CIT2.PAU.03

This is a decision on the petition under 37 CFR 1.137(b), filed March 30, 2005 to revive the application identified above.

The petition is **GRANTED.**

The above-identified application became abandoned for failure to reply to the Office Action mailed 03 June 2004, which set a shortened statutory period for reply of three (3) months. No extensions of time under the provisions of 37 CFR 1.136(a) were obtained. Accordingly, the above identified application became abandoned after midnight 03 September 2004.

An extension of time under 37 CFR 1.136 must be filed prior to the expiration of the maximum extendable period for reply. See In re Application of S., 8 USPQ2d 1630, 1631 (Comm'r Pats. 1988). Accordingly, since the $510 extension of time fee submitted with the petition on 30 March 2005 was subsequent to the maximum extendable period for reply, this fee is unnecessary and will be credited to petitioner's deposit account.

The application file is being referred to Technology Center Art Unit 3737, for review of the amendment filed with the instant application.

Telephone inquiries concerning this decision should be directed to Jeremy Fleming, at 571-272-3284.

Andrea Smith
Petitions Examiner
Office of Petitions
Office of the Deputy Commissioner
for Patent Examination Policy

Jeremy Fleming
Paralegal Specialist
Office of PCT Legal Administration

UNITED STATES PATENT AND TRADEMARK OFFICE

Commissioner for Patents
United States Patent and Trademark Office
P.O. Box 1450
Alexandria, VA 22313-1450
www.uspto.gov

JAN 27 2005

In re Application of	:	
Mark W. Publicover	:	
Serial No. 10/319,390	:	DECISION ON PETITION
Filed: December 13, 2002	:	TO WITHDRAW AS ATTORNEY
For: SPORTS EQUIPMENT USAGE AIDS	:	

By papers filed on July 19, 2004, counsel has petitioned to withdraw as attorney of record in this application.

The petition is GRANTED.

Applicant is advised that the correspondence address for this application is:

Mr. Mark W. Publicover
18505 Marshall Lane
Saratoga, CA 95070

E.R. Kazenske, Director
Technology Center 3700

Michael P. Girard
One World Trade Center, Suite 1600
121 S.W. Salmon Street
Portland, OR 97204

UNITED STATES PATENT AND TRADEMARK OFFICE

COMMISSIONER FOR PATENTS
UNITED STATES PATENT AND TRADEMARK OFFICE
P.O. BOX 1450
ALEXANDRIA, VA 22313-1450
www.uspto.gov

Paper No. 8

MERCHANT & GOULD P.C.
P.O. BOX 2903
MINNEAPOLIS, MN 55402-0903

COPY MAILED

JAN 13 2004

OFFICE OF PETITIONS

ON PETITION

In re Application of :
Michael C. Byram et al. :
Application No. 10/319,392 :
Filed: December 12, 2002 :
Attorney Docket No. 10646.383US01 :

This is in response to the petition under 37 CFR 1.47(a), filed July 28, 2003.

The petition is dismissed.

Rule 47 applicant is given TWO MONTHS from the mailing date of this decision to reply, correcting the below-noted deficiencies. Any reply should be entitled "Request for Reconsideration of Petition Under 37 CFR 1.47(a)," and should only address the deficiencies noted below, except that the reply may include an oath or declaration executed by the non-signing inventor. **FAILURE TO RESPOND WILL RESULT IN ABANDONMENT OF THE APPLICATION.** Any extensions of time will be governed by 37 CFR 1.136(a).

A grantable petition under 37 CFR 1.47(a) requires: (1) proof that the non-signing inventor cannot be reached or refuses to sign the oath or declaration after having been presented with the application papers (specification, claims and drawings); (2) an acceptable oath or declaration in compliance with 35 U.S.C. §§ 115 and 116; (3) the petition fee; and (4) a statement of the last known address of the non-signing inventor. Applicant lacks item (1) set forth above.

As to item (1), Scott Rempe states in his statement of facts that "[t]he Combined Declaration and Power of Attorney was sent via Certified U.S. First Class mail to Mr. Carlson on March 12, 2003 by Lois Slings of Vermeer Manufacturing Company." Petitioner has failed to adequately show or provide proof that nonsigning inventor John Carlson refuses to join in the application after having been presented with the application papers (specification, claims, and drawings). There is no indication in the present case whether joint inventor Mr. Carlson was presented with a copy of the

complete application papers. If joint inventor Mr. Carlson was not presented with a copy of the application papers, then Mr. Carlson could not attest that he has "reviewed and understands the application papers" and therefore could not sign the declaration which he was given. Did joint inventor Mr. Carlson receive the application papers? See MPEP 409.03(d). Unless petitioner can show that a copy of the application papers was presented to joint inventor Mr. Carlson, then petitioner will have to mail a copy of the complete application papers to Mr. Carlson's last known address, return receipt requested. A cover letter of instructions should accompany the mailing of the application papers setting a deadline or a statement that no response will constitute a refusal. This sort of ultimatum lends support to a finding of refusal by conduct. The proof of the pertinent events should be made by a statement of someone with firsthand knowledge of the events and should include documentary evidence, such as certified mail return receipt, cover letter of instructions, telegrams, E-mail, etc., to support a showing that joint inventor Mr. Carlson has refused to sign the declaration after having been presented with the application papers. See MPEP 409.03(d).

Further correspondence with respect to this matter should be addressed as follows:

By mail: Mail Stop PETITION
Commissioner for Patents
Post Office Box 1450
Alexandria, VA 22313-1450

By hand: Crystal Plaza Two, Lobby
2011 South Clark Place
Room 1B03
Arlington, VA 22202

By fax: (703) 872-9306

Telephone inquiries related to this decision should be directed to at Wan Laymon(703) 306-5685.

Frances Hicks
Lead Petitions Examiner
Office of Petitions
Office of the Deputy Commissioner
for Patent Examination Policy

UNITED STATES PATENT AND TRADEMARK OFFICE

COMMISSIONER FOR PATENTS
UNITED STATES PATENT AND TRADEMARK OFFICE
P.O. BOX 1450
ALEXANDRIA, VA 22313-1450
www.uspto.gov

Paper No. 10

MERCHANT & GOULD P.C.
P.O. BOX 2903
MINNEAPOLIS, MN 55402-0903

COPY MAILED

MAR 0 4 2004

OFFICE OF PETITIONS

ON PETITION

In re Application of
Michael C. Byram et al
Application No. 10/319,392
Filed: December 12, 2002
Attorney Docket No. 10646.383US01

This is a decision on the petitioner filed February 25, 2004, requesting reconsideration of a decision mailed January 13, 2004, which refused to accord 37 CFR 1.47(a) status to the above-identified application.

The petition is granted.

Petitioner has shown that the non-signing inventor has refused to join in the filing of the above-identified application.

The above-identified application and papers have been reviewed and found in compliance with 37 CFR 1.47(a). This application is hereby accorded Rule 1.47(a) status. As provided in Rule 1.47(c), this Office will forward notice of this application's filing to the non-signing inventor at the address given in the petition. Notice of the filing of this application will also be published in the Official Gazette.

This application is being forwarded to Technology Center AU 3725 for examination in due course.

Telephone inquiries concerning this decision should be directed to Wan Laymon at (703) 306-5685.

Frances Hicks
Lead Petitions Examiner
Office of Petitions
Office of the Deputy Commissioner
for Patent Examination Policy

UNITED STATES PATENT AND TRADEMARK OFFICE

COMMISSIONER FOR PATENTS
UNITED STATES PATENT AND TRADEMARK OFFICE
P.O. BOX 1450
ALEXANDRIA, VA 22313-1450
www.uspto.gov

JOHN A. CARLSON
2427 107TH
NEW SHARON, IA 50207

COPY MAILED
MAR 0 4 2004
OFFICE OF PETITIONS

In re Application of
Byram; Gabler; and Carlson
Application No. 10/319,392
Filed: December 12, 2002
For: CONTROL OF A FEED SYSTEM OF A GRINDING MACHINE

Dear Mr. Carlson:

You are named as a joint inventor in the above identified United States patent application, filed under the provisions of 35 U.S.C. 116 (United States Code), and 37 CFR 1.47(a), Rules of Practice in Patent Cases. Should a patent be granted on the application you will be designated therein as a joint inventor.

As a named inventor you are entitled to inspect any paper in the file wrapper of the application, order copies of all or any part thereof (at a prepaid cost per 37 CFR 1.19) or make your position of record in the application. Alternatively, you may arrange to do any of the preceding through a registered patent attorney or agent presenting written authorization from you. If you care to join in the application, counsel of record (see below) would presumably assist you. Joining in the application would entail the filing of an appropriate oath or declaration by you pursuant to 37 CFR 1.63.

Telephone inquiries regarding this communication should be directed to Wan Laymon at (703) 306-5685. Requests for information regarding your application should be directed to the File Information Unit at (703) 308-2733. Information regarding how to pay for and order a copy of the application, or a specific paper in the application, should be directed to Certification Division at (703) 308-9726 or 1 (800) 972-6382 (outside the Washington D.C. area).

Frances Hicks
Lead Petitions Examiner
Office of Petitions
Office of the Deputy Commissioner
for Patent Examination Policy

CC:
MERCHANT & GOULD P.C.
P.O. BOX 2903
MINNEAPOLIS, MN 55402-0903

UNITED STATES PATENT AND TRADEMARK OFFICE

COMMISSIONER FOR PATENTS
UNITED STATES PATENT AND TRADEMARK OFFICE
P.O. BOX 1450
ALEXANDRIA, VA 22313-1450
www.uspto.gov
DW 10-03

Paper No. 6

SEED INTELLECTUAL PROPERTY LAW GROUP PLLC
701 FIFTH AVE
SUITE 6300
SEATTLE WA 98104-7092

COPY MAILED

OCT 2 1 2003

OFFICE OF PETITIONS

In re Application of	:	
Garlick et al.	:	
Application No. 10/319,400	:	DECISION GRANTING PETITION
Filed: 13 December, 2002	:	
Att'y Docket No. 380050.407C1	:	

This is a decision on the petition filed on 23 May, 2003, requesting that the above-identified application be accorded a filing date of 13 December, 2002, with one sheet (1) of drawings containing Figure 4 as a part of the original disclosure.

The petition is **granted**.

On 13 December, 2002, the application was filed.

On 7 February, 2003, Initial Patent Examination Division mailed a "Notice to File Missing Parts of Nonprovisional Application" stating that the application had been accorded a filing date of 13 December, 2002, but that, *inter alia*, Figure 4 described in the specification appeared to have been omitted.

In response, on 23 May, 2003, the present petition, and, *inter alia*, one sheet of drawings containing Figure 4 were filed, accompanied by a two (2) month extension of time. Petitioners argue that the sheet of drawings containing Figure 4 was filed with the other application papers on 13 December, 2002, and that the one (1) sheet of drawings was misplaced in the U.S. Patent and Trademark Office (Office). In support of the petition, a copy of petitioner's postcard receipt, which contains an Office-date stamp dated 12/13/02 and the above-identified application number, and acknowledges receipt of, *inter alia*, 11 sheets of drawings (Figs. 1-11) was supplied with the present petition. Petitioners request that the application, including one (1) sheet of drawings containing Figure 4, be accorded a filing date of 13 December, 2002.

Upon review of the record, 10 sheets of drawings containing Figures 1-3, 5A-B, 6A-B, and 7-11 deposited on 13 December, 2002, have been located among the application papers located in the Official file. However, the evidence is convincing that the application papers deposited on 13 December, 2002, included one (1) sheet of drawings containing Figure 4, which was subsequently misplaced in the USPTO. Therefore, the application, including the one (1) sheet of drawings containing Figure 4, was complete on filing and entitled to a filing date of 13 December, 2002.

In view of the above, the petition is granted.

The Notice to File Missing Parts of Nonprovisional Application mailed on 7 February, 2003, is vacated to the extent that it states that Figure 4 appears to have been omitted. The petition fee of $130.00 will be credited to counsel's deposit account, No. 19-1090, as authorized on the fee transmittal form submitted with the present petition.

The application will be processed and examined with a filing date of 13 December, 2002, using the application papers filed on that date and the one (1) sheet of drawings containing Figure 4 supplied on 23 May, 2003.

The application is being returned to Initial Patent Examination Division for reprocessing with a filing date of **13 December, 2002**, using the application papers filed on 13 December, 2002, and the one sheet of drawings containing Figure 4 supplied with the present petition.

Telephone inquiries specific to this matter should be directed to the undersigned at 703 308-6918.

D Wood

Douglas I. Wood
Senior Petitions Attorney
Office of Petitions

UNITED STATES PATENT AND TRADEMARK OFFICE

Commissioner for Patents
United States Patent and Trademark Office
P.O. Box 1450
Alexandria, VA 22313-1450
www.uspto.gov

DIGIMARC CORPORATION
9405 SW GEMINI DRIVE
BEAVERTON OR 97008

COPY MAILED

SEP 0 2 2008

OFFICE OF PETITIONS

In re Application of :
Tian, et al. :
Application No. 10/319,404 : DECISION ON PETITION
Filed: December 12, 2002 : UNDER 37 CFR 1.78(a)(6)
Attorney Docket No. P0752 :

This is a decision on the "PETITION FOR ACCEPTANCE OF UNINTENTIONALLY DELAYED CLAIM OF PRIORITY", filed October 4, 2007, which is being treated as a petition under 37 CFR 1.78(a)(6), to accept an unintentionally delayed claim under 35 U.S.C. §119(e) for the benefit of the prior-filed provisional application no. 60/430,511 set forth in the concurrently filed amendment.

The petition is **DISMISSED AS MOOT.**

Applicant filed the instant application on December 12, 2002, and claimed benefit to priority of a provisional application filed on December 2, 2002. The provisional application was identified by the title, the name of the inventors, and its filing date. However, the provisional application number was not identified, as the provisional application had not yet been assigned an application number.

Applicant is correct in his understanding that a proper priority claim to provisional application no. 60/430,511 was made. Identifying the provisional application by its title and filing date was a sufficient disclosure. See In re Fouche 169 USPQ 429 (CCPA 1971).

The surcharge of $1,410 has been charged to Deposit Account No. 50-1071, as authorized.

Any questions concerning this decision of petition may be directed to Petitions Attorney Cliff Congo at (571)272-3207. All other inquiries concerning either the examination procedures or status of the application should be directed to the Technology Center.

This application is being forwarded to Technology Center Art Unit 2624 for examination.

Anthony Knight
Supervisor
Office of Petitions

Enc: Corrected Filing Receipt (3 pages)

UNITED STATES PATENT AND TRADEMARK OFFICE

UNITED STATES DEPARTMENT OF COMMERCE
United States Patent and Trademark Office
Address: COMMISSIONER FOR PATENTS
P.O. Box 1450
Alexandria, Virginia 22313-1450
www.uspto.gov

APPLICATION NUMBER	FILING or 371(c) DATE	GRP ART UNIT	FIL FEE REC'D	ATTY.DOCKET.NO	TOT CLAIMS	IND CLAIMS
10/319,404	12/12/2002	2624	2456	P0752	38	6

CONFIRMATION NO. 7968

CORRECTED FILING RECEIPT

23735
DIGIMARC CORPORATION
9405 SW GEMINI DRIVE
BEAVERTON, OR 97008

OC000000030990099

Date Mailed: 07/16/2008

Receipt is acknowledged of this non-provisional patent application. The application will be taken up for examination in due course. Applicant will be notified as to the results of the examination. Any correspondence concerning the application must include the following identification information: the U.S. APPLICATION NUMBER, FILING DATE, NAME OF APPLICANT, and TITLE OF INVENTION. Fees transmitted by check or draft are subject to collection. Please verify the accuracy of the data presented on this receipt. **If an error is noted on this Filing Receipt, please submit a written request for a Filing Receipt Correction. Please provide a copy of this Filing Receipt with the changes noted thereon. If you received a "Notice to File Missing Parts" for this application, please submit any corrections to this Filing Receipt with your reply to the Notice. When the USPTO processes the reply to the Notice, the USPTO will generate another Filing Receipt incorporating the requested corrections**

Applicant(s)

Jun Tian, Tualatin, OR;
Stephen K. Decker, Lake Oswego, OR;

Power of Attorney: The patent practitioners associated with Customer Number 23735

Domestic Priority data as claimed by applicant

This appln claims benefit of 60/404,181 08/16/2002
and claims benefit of 60/340,651 12/13/2001
and claims benefit of 60/430,511 12/02/2002

Foreign Applications

If Required, Foreign Filing License Granted: 01/29/2003

The country code and number of your priority application, to be used for filing abroad under the Paris Convention, is **US 10/319,404**

Projected Publication Date: Not Applicable

Non-Publication Request: No

Early Publication Request: No

Title

Reversible watermarking

Preliminary Class

382

PROTECTING YOUR INVENTION OUTSIDE THE UNITED STATES

Since the rights granted by a U.S. patent extend only throughout the territory of the United States and have no effect in a foreign country, an inventor who wishes patent protection in another country must apply for a patent in a specific country or in regional patent offices. Applicants may wish to consider the filing of an international application under the Patent Cooperation Treaty (PCT). An international (PCT) application generally has the same effect as a regular national patent application in each PCT-member country. The PCT process **simplifies** the filing of patent applications on the same invention in member countries, but **does not result** in a grant of "an international patent" and does not eliminate the need of applicants to file additional documents and fees in countries where patent protection is desired.

Almost every country has its own patent law, and a person desiring a patent in a particular country must make an application for patent in that country in accordance with its particular laws. Since the laws of many countries differ in various respects from the patent law of the United States, applicants are advised to seek guidance from specific foreign countries to ensure that patent rights are not lost prematurely.

Applicants also are advised that in the case of inventions made in the United States, the Director of the USPTO must issue a license before applicants can apply for a patent in a foreign country. The filing of a U.S. patent application serves as a request for a foreign filing license. The application's filing receipt contains further information and guidance as to the status of applicant's license for foreign filing.

Applicants may wish to consult the USPTO booklet, "General Information Concerning Patents" (specifically, the section entitled "Treaties and Foreign Patents") for more information on timeframes and deadlines for filing foreign patent applications. The guide is available either by contacting the USPTO Contact Center at 800-786-9199, or it can be viewed on the USPTO website at http://www.uspto.gov/web/offices/pac/doc/general/index.html.

For information on preventing theft of your intellectual property (patents, trademarks and copyrights), you may wish to consult the U.S. Government website, http://www.stopfakes.gov. Part of a Department of Commerce initiative, this website includes self-help "toolkits" giving innovators guidance on how to protect intellectual property in specific countries such as China, Korea and Mexico. For questions regarding patent enforcement issues, applicants may call the U.S. Government hotline at 1-866-999-HALT (1-866-999-4158).

LICENSE FOR FOREIGN FILING UNDER

Title 35, United States Code, Section 184

Title 37, Code of Federal Regulations, 5.11 & 5.15

GRANTED

The applicant has been granted a license under 35 U.S.C. 184, if the phrase "IF REQUIRED, FOREIGN FILING LICENSE GRANTED" followed by a date appears on this form. Such licenses are issued in all applications where the conditions for issuance of a license have been met, regardless of whether or not a license may be required as

set forth in 37 CFR 5.15. The scope and limitations of this license are set forth in 37 CFR 5.15(a) unless an earlier license has been issued under 37 CFR 5.15(b). The license is subject to revocation upon written notification. The date indicated is the effective date of the license, unless an earlier license of similar scope has been granted under 37 CFR 5.13 or 5.14.

This license is to be retained by the licensee and may be used at any time on or after the effective date thereof unless it is revoked. This license is automatically transferred to any related applications(s) filed under 37 CFR 1.53(d). This license is not retroactive.

The grant of a license does not in any way lessen the responsibility of a licensee for the security of the subject matter as imposed by any Government contract or the provisions of existing laws relating to espionage and the national security or the export of technical data. Licensees should apprise themselves of current regulations especially with respect to certain countries, of other agencies, particularly the Office of Defense Trade Controls, Department of State (with respect to Arms, Munitions and Implements of War (22 CFR 121-128)); the Bureau of Industry and Security, Department of Commerce (15 CFR parts 730-774); the Office of Foreign AssetsControl, Department of Treasury (31 CFR Parts 500+) and the Department of Energy.

NOT GRANTED

No license under 35 U.S.C. 184 has been granted at this time, if the phrase "IF REQUIRED, FOREIGN FILING LICENSE GRANTED" DOES NOT appear on this form. Applicant may still petition for a license under 37 CFR 5.12, if a license is desired before the expiration of 6 months from the filing date of the application. If 6 months has lapsed from the filing date of this application and the licensee has not received any indication of a secrecy order under 35 U.S.C. 181, the licensee may foreign file the application pursuant to 37 CFR 5.15(b).

UNITED STATES PATENT AND TRADEMARK OFFICE

Commissioner for Patents
United States Patent and Trademark Office
P.O. Box 1450
Alexandria, VA 22313-1450
www.uspto.gov

DIGIMARC CORPORATION
9405 SW GEMINI DRIVE
BEAVERTON OR 97008

COPY MAILED

SEP 2 8 2009

OFFICE OF PETITIONS

In re Patent No. 7,561,714
Issued: July 14, 2009
Application No. 10/319,404
Filed: December 12, 2002
Attorney Docket No. P0752

: DECISION ON APPLICATION
: FOR PATENT TERM ADJUSTMENT

This is a decision on the "APPLICATION FOR PATENT TERM ADJUSTMENT (Request for Reconsideration of PTO's Patent Term Adjustment Determination) (37 CFR 1.705(d))" filed July 28, 2009, requesting that the patent term adjustment determination for the above-identified patent be changed from one thousand eighty-six (1086) days to one thousand seven hundred fifty-five (1755) days.

The request for reconsideration of patent term adjustment is **DISMISSED**.

On July 14, 2009, the above-identified application matured into US Patent No. 7,561,714 with a patent term adjustment of 1086 days. This request for reconsideration of patent term adjustment was timely filed within two months of the issue date of the patent. See 37 CFR 1.705(d).

The Office acknowledges submission of the $200.00 fee set forth in 37 CFR 1.18(e). No additional fees are required.

Patentees request recalculation of the patent term adjustment based on the decision in Wyeth v. Dudas, 580 F. Supp. 2d 138, 88 U.S.P.Q. 2d 1538 (D.D.C. 2008). Patentees assert that in view of the decision in Wyeth, they are entitled to a total patent term adjustment of 1,755 days (923 days pursuant to 37 CFR 1.702(a) + 1,310 days pursuant to 37 CFR 1.702(b) - 254 overlapping days - 224 days of applicant delay).

The 1,310-day period is calculated based on the application having been filed under 35 U.S.C. 111(a) on December 12, 2002 and the patent having been issued on July 14, 2009, three years and 1,310 days later. Patentees assert that in addition to this 1,310 day period, they are entitled to a period of adjustment due to examination delay pursuant to 37 CFR 1.702(a), of 923 days for the failure by the Office to mail at least one of a notification under 35 U.S.C. 132, pursuant to 37 CFR 1.702(a)(1).

Under 37 CFR 1.703(f), patentees are entitled to a period of patent term adjustment equal to the period of delays based on the grounds set forth in 37 CFR 1.702 reduced by the period of time equal to the period of time during which patentees failed to engage in reasonable efforts to conclude prosecution pursuant to 37 CFR 1.704. In other words, it is the period of Office delay reduced by the period of applicant delay. Patentees do not dispute the period of reduction of 224 days for applicant delay.

Patentees do not dispute that the total period of Office delay is the sum of the period of Three Years Delay and the period of Examination Delay to the extent that these periods of delay are not overlapping. However, in effect, Patentees contend that only a portion of the Three Year Delay period overlaps with the period of examination delay. Accordingly, Patentees submit that the total period of adjustment for Office delay is 1,979 days, which is the sum of the period of Three Year Delay (1310 days) and the period of Examination Delay (923 days), reduced by the period of overlap (254 days). As such, Patentees assert entitlement to a patent term adjustment of 1755 days (923 + 1310 reduced by 254 overlap – 224 (applicant delay)).

As of the issuance of the patent on July 14, 2009, the application was pending three years and 1,310 days after its filing date. The Office asserts that certain action was not taken within the specified time frame, and thus, the entry of a period of adjustment due to examination delay of 1,172 days is correct. At issue is whether patentees should accrue 1,310 days of patent term adjustment for the Office taking in excess of three years to Issue the patent, as well as 1,172 days for Office failure to take a certain action within a specified time frame (or examination delay).

The Office contends that the period of 1,172 days due to examination delay and the period of 1,310 days of delay in issuance of the patent overlap. Patentees' calculation of the period of overlap is inconsistent with the Office's interpretation of this provision. 35 U.S.C. 154(b)(2)(A) limits the adjustment of patent term, as follows:

> To the extent that the periods of delay attributable to grounds specified in paragraph (1) overlap, the period of any adjustment granted under this subsection shall not exceed the actual number of days the issuance of the patent was delayed.

Likewise, 35 CFR 1.703(f) provides that:

> To the extent that periods of delay attributable to the grounds specified in § 1.702 overlap, the period of adjustment granted under this section shall not exceed the actual number of days the issuance of the patent was delayed.

As explained in *Explanation of 37 CFR 1.703(f) and of the United States Patent and Trademark Office Interpretation of 35 U.S.C. 154(b)(2)(A)*, 69 Fed. Reg. 34283 (June

21, 2004), the Office interprets 35 U.S.C. 154(b)(2)(A) as permitting either patent term adjustment under 35 U.S.C. 154(b)(1)(A)(i)-(iv), or patent term adjustment under 35 U.S.C. 154(b)(1)(B), but not as permitting patent term adjustment under both 35 U.S.C. 154(b)(1)(A)(i)-(iv) and 154(b)(1)(B). Accordingly, the Office implements the overlap provision as follows:

> If an application is entitled to an adjustment under 35 U.S.C. 154(b)(1)(B), the entire period during which the application was pending (except for periods excluded under 35 U.S.C. 154(b)(1)(B)(i)-(iii)), and not just the period beginning three years after the actual filing date of the application, is the period of delay under 35 U.S.C. 154(b)(1)(B) in determining whether periods of delay overlap under 35 U.S.C. 154(b)(2)(A). Thus, any days of delay for Office issuance of the patent more than 3 years after the filing date of the application, which overlap with the days of patent term adjustment accorded prior to the issuance of the patent will not result in any additional patent term adjustment. See 35 U.S.C. 154(b)(1)(B), 35 U.S.C. 154(b)(2)(A), and 37 CFR § 1.703(f). See *Changes to Implement Patent Term Adjustment Under Twenty Year Term; Final Rule*, 65 Fed. Reg. 56366 (Sept. 18, 2000). See also *Revision of Patent Term Extension and Patent Term Adjustment Provisions; Final Rule*, 69 Fed. Reg. 21704 (April 22, 2004), 1282 Off. Gaz. Pat. Office 100 (May 18, 2004). See also *Explanation of 37 CFR 1.703(f) and of the United States Patent and Trademark Office Interpretation of 35 U.S.C. 154(b)(2)(A),* 69 Fed. Reg. 34283 (June 21, 2004).

The current wording of § 1.703(f) was revised in response to the misinterpretation of this provision by a number of Patentees. The rule was slightly revised to more closely track the corresponding language of 35 U.S.C. 154(b)(2)(A). The relevant portion differs only to the extent that the statute refers back to provisions of the statute whereas the rule refers back to sections of the rule. This was not a substantive change to the rule nor did it reflect a change of the Office's interpretation of 35 U.S.C. 154(b)(2)(A). As stated in the *Explanation of 37 CFR 1.703(f) and of the United States Patent and Trademark Office Interpretation of 35 U.S.C. 154(b)(2)(A)*, the Office has consistently taken the position that if an application is entitled to an adjustment under the three-year pendency provision of 35 U.S.C. 154(b)(1)(B), the entire period during which the application was pending before the Office (except for periods excluded under 35 U.S.C. 154(b)(1)(B)(i)-(iii)), and not just the period beginning three years after the actual filing date of the application, is the relevant period under 35 U.S.C. 154(b)(1)(B) in determining whether periods of delay "overlap" under 35 U.S.C. 154(b)(2)(A).

This interpretation is consistent with the statute. Taken together the statute and rule provide that to the extent that periods of delay attributable to grounds specified in 35 U.S.C. 154(b)(1) and in corresponding § 1.702 overlap, the period of adjustment granted shall not exceed the actual number of days the issuance of the patent was delayed. The grounds specified in these sections cover the A) guarantee of prompt

Patent and Trademark Office responses, B) guarantee of no more than 3-year application pendency, and C) guarantee or adjustments for delays due to interference, secrecy orders and appeals. A section by section analysis of 35 U.S.C. 154(b)(2)(A) specifically provides that:

> Section 4402 imposes limitations on restoration of term. In general, pursuant to [35 U.S.C.] 154(b)(2)(A)-©), total adjustments granted for restorations under [35 U.S.C. 154](b)(1) are reduced as follows: (1) To the extent that there are multiple grounds for extending the term of a patent that may exist simultaneously (e.g., delay due to a secrecy order under [35 U.S.C.] 181 and administrative delay under [35 U.S.C.] 154(b)(1)(A)), the term should not be extended for each ground of delay but only for the actual number of days that the issuance of a patent was delayed; See 145 Cong. Rec. S14,718[1]

As such, the period for over three-year pendency does not overlap only to the extent that the actual dates in the period beginning three years after the date on which the application was filed overlap with the actual dates in the periods for failure of the Office to take action within specified time frames. In other words, consideration of the overlap does not begin three years after the filing date of the application.

In this instance, the relevant period under 35 U.S.C. 154(b)(1)(B) in determining whether periods of delay "overlap" under 35 U.S.C. 154(b)(2)(A) is the entire period during which the application was pending before the Office, December 12, 2002, to the date the patent issued on July 14, 2009. Prior to the issuance of the patent, 1,172 days of patent term adjustment were accorded for the Office failing to respond within a specified time frame during the pendency of the application. All of the 1,172 days of examination delay overlap with the 1,310 days of Office delay in issuance of the patent. During that time, the issuance of the patent was delayed by 1,310 days, not 1,172 days plus 1,310 days. The Office experienced 1,172 days of examination delay. Otherwise, the Office took all actions set forth in 37 CFR 1.702(a) within the prescribed time frames. Nonetheless, given the 1,172 days of examination delay and the time allowed within the time frames for processing and examination, as of the date the patent issued, the application was pending three years and 1,310 days. The Office did not delay 1,172 days and also delay an additional 1,310 days. Accordingly, 1,310 days of patent term adjustment (not 1,172 days and 1,310 days) was properly entered given the overlapping periods of delay under 37 CFR 1.702(a) and 1.702(b) overlap. Entry of both periods is not warranted.

---

[1] The AIPA is title IV of the Intellectual Property and Communications Omnibus Reform Act of 1999 (S. 1948), which was incorporated and enacted as law as part of Pub. L. 106-113. The Conference Report for H.R. 3194, 106th Cong. 1st Sess. (1999), which resulted in Pub. L. 106-113, does not contain any discussion (other than the incorporated language) of S. 1948. A section-by-section analysis of S. 1948, however, was printed in the Congressional Record at the request of Senator Lott, See 145 Cong. Rec. S14,708-26 (1999)(daily ed. Nov. 17, 1999).

In view thereof, no adjustment to the patent term will be made.

Telephone inquiries specific to this decision should be directed to Senior Petitions Attorney Patricia Faison-Ball at (571) 272-3212.

Alesia Brown
Senior Petitions Attorney
Office of Petitions

UNITED STATES PATENT AND TRADEMARK OFFICE

COMMISSIONER FOR PATENTS
UNITED STATES PATENT AND TRADEMARK OFFICE
P.O. BOX 1450
ALEXANDRIA, VA 22313-1450
www.uspto.gov

APR - 2 2004

MAILED

APR - 2 2004

OFFICE OF THE DIRECTOR
TC 3600

KNOBBE MARTENS OLSON & BEAR LLP
2040 MAIN STREET
FOURTEENTH FLOOR
IRVINE CA 92614

In re application of
Dan Hissam
Application No. 10/319,408
Filed: December 12, 2002
For: MOTORCYCLE HANDLEBAR WITH SHOCK ABSORBER

DECISION ON PETITION TO MAKE SPECIAL (INFRINGEMENT)

This is a decision on the petition under 37 C.F.R § 1.102(d) filed September 19, 2003 to make the above-identified application special. The delay in deciding this petition is regretted.

The petition requests that the above-identified application be made special under the procedure set forth in M.P.E.P. § 708.02, item II: Infringement.

MPEP 708.02 states that a Petition to Make Special based on Infringement must have the following: (1) the appropriate petition fee under 37 CFR 1.17(i); (2) a statement by the assignee, applicant, or attorney alleging: (A) that there is an infringing device or product actually on the market or method in use; (B) that a rigid comparison of the alleged infringing device, product or method with the claims of the application has been made, and that, in his or her opinion, some of the claims are unquestionably infringed; and (C) that he or she has made a careful and thorough search of the prior art, or has good knowledge of the prior art, and has sent a copy of the references deemed most closely related to the subject matter encompassed by the claims.

The petition filed September 19, 2003 meets all of the requirements above and, therefore, the petition is **GRANTED**.

The examiner is directed (1) to make an interference search for possible interfering applications; (2) to promptly examine this application out of turn; and (3) if any interfering application is discovered, to examine such application simultaneously and state in the first official letter of such application that it is being taken out of turn because of a possible interference.

Petitioner is advised that this application will continue to be special, throughout its entire prosecution and pendency, including interference and appeal, if any, only if petitioner makes a prompt *bona fide* effort, in response to each Office action, to place the application in condition for allowance, even if it is necessary to conduct an interview with the examiner to accomplish this purpose.

Kenneth J. Dorner
Special Programs Examiner
Technology Center 3600
(703) 308-0866

KJD/mjz: 3/30/04

UNITED STATES PATENT AND TRADEMARK OFFICE

Commissioner for Patents
United States Patent and Trademark Office
P.O. Box 1450
Alexandria, VA 22313-1450
www.uspto.gov

APR 06 2006

In re Patent No. STERLING ET AL.
Issue Date: March 07, 2006
Appl. No.: 10/319,409
Filed: December 12, 2002
For: Pathlength-independent methods for optically determining material composition

DECISION DISMISSING PETITION
37 CFR 1.324

This is a decision on the petition under 37 CFR 1.48, filed March 9, 2006. In view of the fact that the patent has already issued, the request under 37 CFR 1.48 has been treated as a petition to correct inventorship under 37 CFR 1.324.

The petition is dismissed.

A petition to correct inventorship as provided by 37 CFR 1.324 requires (1) a statement from each person who is being added as an inventor that the inventorship error occurred without any deceptive intention on their part, (2) a statement from the current named inventors (including any "inventor" being deleted) who have not submitted a statement as per "(1)" either agreeing to the change of inventorship or stating that they have no disagreement in regard to the requested change, (3) a statement from all assignees of the parties submitting a statement under "(1)" and "(2)" agreeing to the change of inventorship in the patent; such statement must comply with the requirements of 37 CFR 3.73(b); and (4) the fee set forth in 37 CFR 1.20(b). This petition lacks item (2), a statement from the current named inventors either agreeing to the change of inventorship or stating that they have no disagreement with regard to the requested change.

David P. Porta
Supervisory Patent Examiner
Art Unit 2884
Patent Examining Group 2800

KNOBBE MARTENS OLSON & BEAR LLP
2040 MAIN STREET
FOURTEENTH FLOOR
IRVINE, CA 92614

UNITED STATES PATENT AND TRADEMARK OFFICE

UNITED STATES DEPARTMENT OF COMMERCE
United States Patent and Trademark Office
Address: COMMISSIONER FOR PATENTS
P.O. Box 1450
Alexandria, Virginia 22313-1450
www.uspto.gov

APPLICATION NO.	FILING DATE	FIRST NAMED INVENTOR	ATTORNEY DOCKET NO.	CONFIRMATION NO.
10/319,409	12/12/2002	Bernhard B. Sterling	OPTIS.060A	7953

20995 7590 11/21/2008
KNOBBE MARTENS OLSON & BEAR LLP
2040 MAIN STREET
FOURTEENTH FLOOR
IRVINE, CA 92614

EXAMINER	
GAGLIARDI, ALBERT J	

ART UNIT	PAPER NUMBER
2878	

NOTIFICATION DATE	DELIVERY MODE
11/21/2008	ELECTRONIC

Please find below and/or attached an Office communication concerning this application or proceeding.

The time period for reply, if any, is set in the attached communication.

Notice of the Office communication was sent electronically on above-indicated "Notification Date" to the following e-mail address(es):

jcartee@kmob.com
eOAPilot@kmob.com

UNITED STATES PATENT AND TRADEMARK OFFICE

COMMISSIONER FOR PATENTS
UNITED STATES PATENT AND TRADEMARK OFFICE
P.O. BOX 1450
ALEXANDRIA, VA 22313-1450
www.uspto.gov

In re Patent No. STERLING ET AL.
Issue Date: 07 March 2006
Appl No.: 10/319,409
Filed: December 12, 2002
For: Pathlength-Independent Methods For Optically Determining Material Composition

DECISION GRANTING PETITION
37 CFR 1.324

This is a decision on the petition filed 07 August 2006 to correct inventorship under 37 CFR 1.324.

The petition is granted.

The patented file is being forwarded to Certificate of Corrections Branch for issuance of a certificate naming only the actual inventor or inventors.

/David P. Porta/
Supervisory Patent Examiner, Art Unit 2884

David P. Porta
Supervisory Patent Examiner
Art Unit 2884
Technology Center 2800

KNOBBE MARTENS OLSON & BEAR LLP
2040 MAIN STREET
FOURTEENTH FLOOR
IRVINE, CA 92614

UNITED STATES PATENT AND TRADEMARK OFFICE

Commissioner for Patents
United States Patent and Trademark Office
P.O. Box 1450
Alexandria, VA 22313-1450
www.uspto.gov

Paper No.

DIGIMARC CORPORATION
9405 SW GEMINI DRIVE
BEAVERTON OR 97008

MAILED

FEB 27 2009

OFFICE OF PETITIONS

In re Application of	:	
Tian et al.	:	
Application No. 10/319,413	:	ON APPLICATION FOR
Filed: December 13, 2002	:	PATENT TERM ADJUSTMENT
Attorney Docket No. P0755	:	

This is in response to the APPLICATION FOR PATENT TERM ADJUSTMENT (Request for Reconsideration of PTO's Patent Term Adjustment Determination)(37 CFR 1.705(b) filed February 6, 2009. Applicants request that the determination of patent term adjustment should be increased from eight hundred sixty-two (862) days to two thousand one hundred fifteen (2115) days[1]. Applicants request this correction on the basis that the Office will take in excess of three years to issue this patent and in light of the recent court decision in Wyeth v. Dudas, No. 07-1492 (D.D.C. September 30, 2008).

As the instant application for patent term adjustment requests reconsideration of the patent term adjustment as it relates to the Office's failure to issue the patent within 3 years of the filing date, a decision is being **held in abeyance** until after the actual patent date. Knowledge of the actual date the patent issues is required to calculate the amount, if any, of additional patent term patentee is entitled to for Office failure to issue the patent within 3 years. See § 1.703(b). (This is true even in this instance where a request for continued examination (RCE) was filed. The computer will not undertake the § 1.703(b) calculation until the actual date of issuance of the patent has been determined.).

[1] This calculation is based on the patent issuing on May 19, 2009.

Applicant is given TWO (2) MONTHS from the issue date of the patent to file a written request for reconsideration of the patent term adjustment for Office failure to issue the patent within 3 years. A copy of this decision should accompany the request. Applicant may seek such consideration without payment of an additional fee. However, as to all other bases for seeking reconsideration of the patent term adjustment indicated in the patent, all requirements of § 1.705(d) must be met. Requests for reconsideration on other bases must be timely filed and must include payment of the required fee.

Rather than file the request for reconsideration of Patent Term Adjustment at the time of the mailing of the notice of allowance, applicant is advised that they may wait until the time of the issuance of the patent and file a request for reconsideration of the patent term pursuant to 37 CFR 1.705(d). The USPTO notes that it does not calculate the amount of time earned pursuant to 37 CFR 1.702(b) until the time of the issuance of the patent and accordingly, the Office will consider any request for reconsideration of the patent term adjustment due to an error in the calculation of 37 CFR 1.702(b) to be timely if the request for reconsideration is filed within two months of the issuance of the patent.

The Office acknowledges submission of the $200.00 fee set forth in 37 CFR 1.18(e). No additional fees are required.

The application is being forwarded to the Office of Data Management for issuance of the patent. The patent term adjustment indicated on the patent (as shown on the Issue Notification mailed about three weeks prior to patent issuance) will include any additional adjustment accrued both for Office delay in issuing the patent more than four months after payment of the issue fee and satisfaction of all outstanding requirements, and for the Office taking in excess of three years to issue the patent (to the extent that the three-year period does not overlap with periods already accorded).

Telephone inquiries specific to this decision should be directed to the undersigned at (571) 272-3219.

Nancy Johnson
Senior Petitions Attorney
Office of Petitions

UNITED STATES PATENT AND TRADEMARK OFFICE

COMMISSIONER FOR PATENTS
UNITED STATES PATENT AND TRADEMARK OFFICE
P.O. BOX 1450
ALEXANDRIA, VA 22313-1450
www.uspto.gov

Paper No.

DIGIMARC CORPORATION
9405 SW GEMINI DRIVE
BEAVERTON OR 97008

MAILED

MAR 10 2010

OFFICE OF PETITIONS

In re Patent No. 7,515,730	:	DECISION ON REQUEST
Tian et al.	:	FOR RECONSIDERATION OF
Issue Date: April 7, 2009	:	PATENT TERM ADJUSTMENT
Application No. 10/319,413	:	and
Filed: December 13, 2002	:	NOTICE OF INTENT TO ISSUE
Atty Docket No. P0755	:	CERTIFICATE OF CORRECTION
	:	

This is a decision on the petition filed on May 28, 2009, which is being treated as a petition under 37 CFR 1.705(d) requesting that the patent term adjustment indicated on the above-identified patent be corrected to indicate that the term of the above-identified patent is extended or adjusted by two thousand seventy-three (2,073) days.

The petition to correct the patent term adjustment indicated on the above-identified patent is **GRANTED to the extent indicated herein.** The patent term adjustment is corrected to indicate that the term of the above-identified patent is extended or adjusted by **one thousand eight hundred seventy-eight (1,878)** days.

Patentee is incorrect in stating "the 14 month delay" and "the Three Year Delay" do not overlap. 195 calendar days of the "A" delay beginning on December 14, 2005 and ending on June 26, 2006 occur on calendar days during the over three-year period, which began on December 14, 2005 and ended on April 7, 2009, the date of issuance of the patent. Considering this overlap, the 1,211 days of Three Year Delay (B delay) is properly reduced to 1016 (1,211 - 195) days. Further, patentee is advised that the 347 days accorded at issuance was for B delay. The 347 days is being removed and corrected to 1,016 days. In view thereof, the patent term adjustment is 1,878 (864 + 1211 - 195 - 2), not 2073 days.

The Office will *sua sponte* issue a certificate of correction. Pursuant to 37 CFR 1.322, the Office will not issue a certificate of correction without first providing assignee or patentee an opportunity to be heard. Accordingly, patentees are given **one (1) month or thirty (30) days**, whichever is longer, from the mail date of this decision to respond. No extensions of time will be granted under § 1.136.

The Office acknowledges submission of the $200.00 fee set forth in 37 CFR 1.18(e) on February 6, 2009. No additional fees are required.

The application is being forwarded to the Certificates of Branch for issuance of a certificate of correction. The Office will issue a certificate of correction indicating that the term of the above-identified patent is extended or adjusted by one thousand eight hundred seventy-eight (1,878) days.

Telephone inquiries specific to this matter should be directed to the undersigned at (571) 272-3219.

Nancy Johnson
Senior Petitions Attorney
Office of Petitions

Enclosure: Copy of DRAFT Certificate of Correction

UNITED STATES PATENT AND TRADEMARK OFFICE

CERTIFICATE OF CORRECTION

PATENT : 7,515,730 B2

DATED : **April 7, 2009** **DRAFT**

INVENTOR(S) : Tian et al.

It is certified that error appears in the above-identified patent and that said Letters Patent is hereby corrected as shown below:

On the cover page,

[*] Notice: Subject to any disclaimer, the term of this patent is extended or adjusted under 35 USC 154(b) by 1209 days

Delete the phrase "by 1209 days" and insert – by 1878 days--

UNITED STATES PATENT AND TRADEMARK OFFICE

Commissioner for Patents
United States Patent and Trademark Office
P.O. Box 1450
Alexandria, VA 22313-1450
www.uspto.gov

COPY MAILED
SEP 22 2008
OFFICE OF PETITIONS

TOWNSEND and TOWNSEND and CREW LLP
Two Embarcadero Center, 8th Floor,
San Francisco, California 94111-3834

In re Application of	:	
Gallant et al.	:	
Application No. 10/319,423	:	DECISION ON PETITION
Filed: December 12, 2002	:	TO WITHDRAW
Attorney Docket No. 10.1034	:	FROM RECORD
	:	

This is a decision on the Request to Withdraw as attorney or agent of record under 37 C.F.R. § 1.36(b), filed September 27, 2004.

The request is **MOOT**.

A review of the file record indicates that the power of attorney to TOWNSEND and TOWNSEND and CREW LLP has been revoked by the assignee of the patent application on March 7, 2006. Accordingly, the request to withdraw under 37 C.F.R. § 1.36(b) is moot.

All future communications from the Office will continue to be directed to the correspondence address of record until otherwise notified by applicant.

Telephone inquires concerning this decision should be directed to the undersigned at 571-272-4914.

Ramesh Krishnamurthy
Petitions Examiner
Office of Petitions

UNITED STATES PATENT AND TRADEMARK OFFICE

COMMISSIONER FOR PATENTS
UNITED STATES PATENT AND TRADEMARK OFFICE
P.O. BOX 1450
ALEXANDRIA, VA 22313-1450
www.uspto.gov

PATTON BOGGS LLP
8484 WESTPARK DRIVE
SUITE 900
MCLEAN, VA 22102

COPY MAILED

JAN 12 2006

OFFICE OF PETITIONS

In re Application of :
Stephen J. Brown :
Application No. 10/319,427 : ON PETITION
Filed: December 12, 2002 :
Attorney Docket No. 014030.0145N1US :

This is a decision on the petition, filed August 3, 2005, under 37 CFR 1.137(b) to revive the above-identified application.

The petition is GRANTED.

The application became abandoned for failure to pay the issue fee on or before October 14, 2004. Receipt is acknowledged of the requisite issue fee on August 3, 2005.

The application is being referred to Technology Center AU 3736 for consideration of the amendment under 37 CFR 1.312 filed August 3, 2005.

Telephone inquiries concerning this decision should be directed to the undersigned at (571) 272-3204. Inquiries relating to further prosecution should be directed to the Technology Center.

Sherry D. Brinkley
Petitions Examiner
Office of Petitions
Office of the Deputy Commissioner
for Patent Examination Policy

UNITED STATES PATENT AND TRADEMARK OFFICE

Commissioner for Patents
United States Patent and Trademark Office
P.O. Box 1450
Alexandria, VA 22313-1450
www.uspto.gov

DAVID I. ROCHE
BAKER & MCKENZIE
130 E. RANDOLPH DRIVE
CHICAGO IL 60601

COPY MAILED

JAN 19 2007

OFFICE OF PETITIONS

In re Application of	:	
Johnson et al.	:	
Application No. 10/319,434	:	ON PETITION
Filed: December 13, 2002	:	
Attorney Docket No. 217 P 873	:	

This is a decision on the petition under 37 C.F.R. § 1.137(b), filed October 21, 2005, to revive the above-identified application.

The petition is **GRANTED.**

The petition satisfies the conditions for revival pursuant to the provisions of 37 CFR 1.137(b) in that (1) the reply in the form of a Request for Continued Examination and an Amendment; (2) the petition fee; and (3) the required statement of unintentional delay have been received. Accordingly, the response has been accepted as having been unintentionally delayed.

This matter is being referred to Technology Center 3700 for processing of the Request for Continued Examination under 37 CFR 1.114 filed with the instant petition.

Telephone inquiries regarding this decision should be directed to the undersigned at (571) 272-3282.

Liana Walsh
Petitions Examiner
Office of Petitions

UNITED STATES PATENT AND TRADEMARK OFFICE

COMMISSIONER FOR PATENTS
UNITED STATES PATENT AND TRADEMARK OFFICE
P.O. BOX 1450
ALEXANDRIA, VA 22313-1450
www.uspto.gov

Paper No. 7

FISH & RICHARDSON PC
225 FRANKLIN ST
BOSTON MA 02110

COPY MAILED

APR 0 2 2004

OFFICE OF PETITIONS

In re Application of	:
Mannick et al.	: DECISION ON PETITION
Application No. 10/319,457	: UNDER 37 CFR 1.78(a)(6)
Filed: 12 December, 2002	:
Atty Docket No. 883934.0005	:

This is a decision on the petition under 37 CFR 1.78(a)(6), filed on 12 September, 2003, to accept an unintentionally delayed claim under 35 U.S.C. § 119(e) for the benefit of a prior-filed provisional application.

The petition is **GRANTED**.

A petition under 37 CFR 1.78(a)(6) is only applicable to those applications filed on or after 29 November, 2000. Further, the petition is appropriate only after the expiration of the period specified in 37 CFR 1.78(a)(5) and must be filed during the pendency of the nonprovisional application. In addition, the petition must be accompanied by:

(1) the reference required by 35 U.S.C. § 119(e) and 37 CFR 1.78(a)(5) of the prior-filed application, unless previously submitted;[1]

(2) the surcharge set forth in § 1.17(t); and

(3) a statement that the entire delay between the date the claim was due under 37 CFR 1.78(a)(2) and the date the claim was filed was

[1]Any nonprovisional application or international application designating the United States of America claiming the benefit of one or more prior-filed provisional applications must contain or be amended to contain a reference (amendment to the first line of the specification following the title or in an application data sheet (ADS)) to each such prior-filed application, identifying it by application number (consisting of the series code and serial number).

> unintentional. The Commissioner may require additional information where there is a question whether the delay was unintentional.

The present pending nonprovisional application was filed on 12 December, 2002, within twelve months of the filing date of the prior provisional application No. 60/339,268, and for which benefit is claimed. A reference to the prior provisional application has been included in an amendment to the first sentence of the specification following the title.

The present nonprovisional application was filed after 29 November, 2000, and the claim for priority herein is submitted after the expiration of the period specified in 37 CFR 1.78(a)(5). Also, the reference to the prior-filed provisional application was submitted during the pendency of the nonprovisional application for which the benefit is sought.[2] Accordingly, having found that the present petition satisfies the conditions of 37 CFR 1.78(a)(6) for acceptance of an unintentionally delayed claim for priority under 35 U.S.C. § 119(e), the petition to accept an unintentionally delayed claim to benefit to prior-filed provisional Application No. 60/339,268 is granted as of the date of filing the petition.

A corrected filing receipt which includes the prior claim to provisional Application No. 60/339,268, filed on 12 December, 2001, accompanies this decision on petition.

The $1,300.00 fee required by 37 CFR 1.78(a)(6) has been received.

The granting of the petition to accept the delayed benefit claim to the prior-filed application under 37 CFR 1.78(a)(6) should not be construed as meaning that the instant application is entitled to the benefit of the prior-filed application. In order for the instant application to be entitled to the benefit of the prior-filed application, all other requirements under 35 U.S.C. § 119(e) and 37 CFR 1.78(a)(5) and (a)(6) must be met. Similarly, the fact that the corrected Filing Receipt accompanying this decision on petition includes the prior-filed application should not be construed as meaning that applicant is entitled to the claim for benefit to the prior-filed application noted thereon. Accordingly, the examiner will, in due course, consider this benefit claim and determine whether the instant application is

---

[2] See 35 U.S.C. § 119(e).

entitled to the benefit of the earlier-filed provisional application.

The application is being forwarded to the Office of Initial Patent Examination for further processing.

Telephone inquiries related to this decision should be directed to Senior Petitions Attorney Douglas I. Wood at 703-308-6918.

Charles A. Pearson
Director, Office of Petitions

Encl: Corrected Filing Receipt

UNITED STATES PATENT AND TRADEMARK OFFICE

Commissioner for Patents
United States Patent and Trademark Office
P.O. Box 1450
Alexandria, VA 22313-1450
www.uspto.gov

FISH & RICHARDSON PC
P.O. BOX 1022
MINNEAPOLIS MN 55440-1022

COPY MAILED

JUL 3 1 2008

In re Application of :
Mannick et al. : DECISION ON APPLICATION
Application No. 10/319,457 : FOR
Filed: December 12, 2002 : PATENT TERM ADJUSTMENT
Atty Docket No. 07917-226001 :

This is a decision on the "APPLICATION FOR PATENT TERM ADJUSTMENT UNDER § 1.705(B)," filed on January 18, 2008. Applicants request that the patent term adjustment at the time of the mailing of the Notice of Allowance be corrected from one hundred fifty-six (156) days to three hundred forty-nine (349) days.

The application for patent term adjustment is **GRANTED.**

The Office has updated the PAIR screen to reflect that the correct Patent Term Adjustment (PTA) determination at the time of the mailing of the Notice of Allowance is THREE HUNDRED FORTY-NINE (349) days. A copy of the updated PAIR screen, showing the correct determination, is enclosed.

On October 18, 2007, the Office mailed the Determination of Patent Term Adjustment under 35 U.S.C. 154(b) in the above-identified application. The Notice stated that the patent term adjustment (PTA) to date is 156 days. The instant application for patent term adjustment was timely filed.[1]

[1] PALM records show that the issue fee payment was also received on January 18, 2008.

The sole matter in dispute is a reduction of 304 days for applicant delay in responding to a Notice to File Missing Parts of Nonprovisional Application.

Specifically, applicants assert that the PTA adjustment for applicant delay should be reduced by 193 days, from 304 days to 111 days, for the filing, on September 22, 2003, of a response to the Notice to File Missing Parts of Nonprovisional Application, filed three (3) months and 111 days after the Notice to File Missing Parts of Nonprovisional Application was mailed on March 3, 2003. Applicants assert that the response was incorrectly entered in Office records as having been filed on April 2, 2004.

Applicant's argument is correct in that a review of the Office Image File Wrapper reveals that the response to the Notice to File Missing Parts of Nonprovisional Application mailed on March 3, 2003, was indeed stamped as received in the USPTO on September 22, 2003, but was incorrectly entered in PAIR with a receipt date of April 2, 2004. Accordingly, the patent term adjustment should be reduced by one hundred eleven (111) days, rather than three hundred four (304) days, of applicant delay for filing the response three (3) months and one hundred eleven (111) days after the mailing of the Notice to File Missing Parts of Nonprovisional Application.

In view thereof, the correct determination of patent term adjustment at the time of the mailing of the notice of allowance is THREE HUNDRED FORTY-NINE (349) days (657 days of PTO delay, reduced by 308 (111+91+15+91) days of Applicant delay).

Receipt of the $200.00 fee set forth in 37 CFR 1.18(e) is acknowledged. No additional fees are required.

The application is being forwarded to the Office of Data Management for issuance of a patent. The patent term adjustment indicated on the patent (as shown on the Issue Notification mailed about three weeks prior to patent issuance) will include any additional adjustment accrued both for Office delay in issuing the patent more than four months after payment of the issue fee and satisfaction of all outstanding requirements, and for the Office taking in excess of three years to issue the patent (to the extent that the three-year period does not overlap with periods already accorded).

Telephone inquiries specific to this matter should be directed to Douglas I. Wood, Senior Petitions Attorney, at (571) 272-3231.

Nancy Johnson
Senior Petitions Attorney
Office of Petitions

Enclosure: Copy of adjusted PAIR calculation

Day : Wednesday

PALM INTRANET

Date: 7/30/2008
Time: 17:17:23

PTA Calculations for Application: 10/319457			
Application Filing Date:	12/12/2002	PTO Delay (PTO):	657
Issue Date of Patent:		Three Years:	0
Pre-Issue Petitions:	0	Applicant Delay (APPL):	501
Post-Issue Petitions:	0	Total PTA (days):	349
PTO Delay Adjustment:	193		

File Contents History

Number	Date	Contents Description	PTO	APPL	START
68	07/28/2008	ADJUSTMENT OF PTA CALCULATION BY PTO		111	
67	07/28/2008	ADJUSTMENT OF PTA CALCULATION BY PTO	304		
55	10/18/2007	MAIL NOTICE OF ALLOWANCE			
54	10/18/2007	MAIL EXAMINER'S AMENDMENT			
53	10/15/2007	ISSUE REVISION COMPLETED			
52	10/15/2007	NOTICE OF ALLOWANCE DATA VERIFICATION COMPLETED			
51	10/15/2007	DOCUMENT VERIFICATION			
50	10/02/2007	EXAMINER INTERVIEW SUMMARY RECORD (PTOL - 413)			
49	10/11/2007	EXAMINER'S AMENDMENT COMMUNICATION			
48	10/11/2007	NOTICE OF ALLOWABILITY			
47	10/05/2007	CASE DOCKETED TO EXAMINER IN GAU			
46	08/13/2007	INFORMATION DISCLOSURE STATEMENT CONSIDERED			
45	08/13/2007	INFORMATION DISCLOSURE STATEMENT (IDS) FILED			
44	08/13/2007	ELECTRONIC INFORMATION DISCLOSURE STATEMENT		0	42
43	08/14/2007	DATE FORWARDED TO EXAMINER			
42	08/13/2007	RESPONSE AFTER NON-FINAL ACTION		91	40
41	08/13/2007	REQUEST FOR EXTENSION OF TIME - GRANTED			
40	02/14/2007	MAIL NON-FINAL REJECTION			
39	02/12/2007	NON-FINAL REJECTION			
38	12/19/2006	CASE DOCKETED TO EXAMINER IN GAU			
37	12/15/2006	DATE FORWARDED TO EXAMINER			
36	12/07/2006	RESPONSE AFTER NON-FINAL ACTION			

35	11/28/2006	CASE DOCKETED TO EXAMINER IN GAU			
34	09/08/2006	MAIL NON-FINAL REJECTION			
33	09/05/2006	NON-FINAL REJECTION			
32	11/12/2004	INFORMATION DISCLOSURE STATEMENT CONSIDERED			
31	06/20/2006	DATE FORWARDED TO EXAMINER			
30	06/14/2006	RESPONSE AFTER NON-FINAL ACTION		15	27
29	06/09/2006	MAIL NOTICE OF INFORMAL OR NON-RESPONSIVE AMENDMENT			
28	06/07/2006	DATE FORWARDED TO EXAMINER			
27.1	05/30/2006	INFORMAL OR NON-RESPONSIVE AMENDMENT AFTER EXAMINER ACTION			
27	05/30/2006	RESPONSE AFTER NON-FINAL ACTION		91	25
26	05/30/2006	REQUEST FOR EXTENSION OF TIME - GRANTED			
25	11/30/2005	MAIL NON-FINAL REJECTION	657		-1
24	11/28/2005	NON-FINAL REJECTION			
23	08/10/2005	PRELIMINARY AMENDMENT			
22	11/12/2004	REFERENCE CAPTURE ON IDS			
21.7	11/12/2004	INFORMATION DISCLOSURE STATEMENT (IDS) FILED			
21	11/12/2004	INFORMATION DISCLOSURE STATEMENT (IDS) FILED			
20	12/29/2003	MISCELLANEOUS INCOMING LETTER			
19	09/12/2003	PRELIMINARY AMENDMENT			
18	09/12/2003	MISCELLANEOUS INCOMING LETTER			
17	09/16/2004	CASE DOCKETED TO EXAMINER IN GAU			
16	09/16/2004	IFW TSS PROCESSING BY TECH CENTER COMPLETE			
15	07/08/2004	TRANSFER INQUIRY TO GAU			
14	07/03/2004	APPLICATION DISPATCHED FROM OIPE			
13	07/06/2004	APPLICATION IS NOW COMPLETE			
12	04/02/2004	PAYMENT OF ADDITIONAL FILING FEE/PREEXAM		304	5
10	04/02/2004	A STATEMENT BY ONE OR MORE INVENTORS SATISFYING THE REQUIREMENT UNDER 35 USC 115, OATH OF THE APPLIC			
9	04/02/2004	MAIL-PETITION DECISION - GRANTED			
8	12/02/2003	CORRESPONDENCE ADDRESS CHANGE			
7	12/02/2003	CHANGE IN POWER OF ATTORNEY (MAY			

		INCLUDE ASSOCIATE POA)			
6	09/12/2003	PETITION ENTERED			
5	03/03/2003	NOTICE MAILED--APPLICATION INCOMPLETE--FILING DATE ASSIGNED			
4	02/20/2003	CLEARED BY L&R (LARS)			
3	01/22/2003	IFW SCAN & PACR AUTO SECURITY REVIEW			
2	12/18/2002	IFW SCAN & PACR AUTO SECURITY REVIEW			
1	12/12/2002	INITIAL EXAM TEAM NN			

Search Another: Application# Search

EXPLANATION OF PTA CALCULATION

EXPLANATION OF PTE CALCULATION

To go back, right click here and select Back. To go forward, right click here and select Forward. To refresh, right click here and select Refresh.

Back to OASIS | Home page

UNITED STATES PATENT AND TRADEMARK OFFICE

COMMISSIONER FOR PATENTS
UNITED STATES PATENT AND TRADEMARK OFFICE
P.O. BOX 1450
ALEXANDRIA, VA 22313-1450
www.uspto.gov

FISH & RICHARDSON PC
P.O. BOX 1022
MINNEAPOLIS MN 55440-1022

COPY MAILED

AUG 05 2009

OFFICE OF PETITIONS

In re Patent No. 7,419,834	:	
Mannick et al.	:	DECISION ON
Issue Date: September 2, 2008	:	REQUEST FOR
Application No. 10/319,457	:	RECONSIDERATION OF
Filed: December 12, 2002	:	PATENT TERM ADJUSTMENT
Attorney Docket No. 07917-226001	:	

This is a decision on the "REQUEST FOR RECONSIDERATION OF PATENT TERM ADJUSTMENT UNDER 37 C.F.R. § 1.705," filed on November 3, 2008, requesting that the patent term adjustment determination for the above-identified patent be changed from five hundred sixty-seven (567) days to one thousand two hundred twenty-four (1224) days.

The request for reconsideration of patent term adjustment is **DISMISSED** with respect to making any change in the patent term adjustment determination under 35 U.S.C. § 154(b) of 567 days.

BACKGROUND

This application was filed on December 12, 2002. On October 18, 2007, the Office mailed a notice that the initial determination of patent term adjustment under 35 U.S.C. 154(b) to date is 156 days[1]. On September 2, 2008, the application matured into U.S. Patent No. 7,419,834, with a revised patent term adjustment of 567 days. The Office determined that the 995 days of Office delay pursuant to 35 U.S.C. 154(b)(1)(B) and 37 CFR 1.702(b)[2,3]

[1] On January 18, 2008, an application for patent term adjustment was filed. On July 31, 2008, the application was granted. In the decision mailed on July 31, 2008, on the initial application for patent term adjustment, 657 days of Office delay was reduced by 308 days of applicant delay for a patent term adjustment of 349 days.

[2] Pursuant to 35 U.S.C. 154(b)(1)(B), 37 CFR 1.702(b) provides, in pertinent part, that:

overlaps with the 764 days of Office delay pursuant to 35 U.S.C. 154(b)(1)(A) and 37 CFR 1.702(a)(1)[4,5] accorded prior to the issuance of the application. As such, 231 additional days of patent term adjustment were entered at issuance under the three-year pendency provision. Given the applicant delay of 428 days, the patent issued with a revised patent term adjustment of 567 (764 + 231 - 428) days.

On November 3, 2008, patentee timely submitted this request for reconsideration of patent term adjustment (with required fee), asserting that the correct number of days of Patent Term Adjustment is 1224 days under the courts interpretation of the overlap provision as set forth in Wyeth v. Dudas, 580 F. Supp.

Failure to issue a patent within three years of the actual filing date of the application. Subject to the provisions of 35 U.S.C. 154(b) and this subpart, the term of an original patent shall be adjusted if the issuance of the patent was delayed due to the failure of the Office to issue a patent within three years after the date on which the application was filed under 35 U.S.C. 111(a) or the national stage commenced under 35 U.S.C. 371(b) or (f) in an international application, but not including:

(i) any time consumed by continued examination of the application requested by the applicant under section 132(b).

[3] As of the issuance of the patent on September 2, 2008, the application was pending three years and 995 days.

[4] 37 CFR § 1.702, provides grounds for adjustment of patent term due to examination delay under the Patent Term Guarantee Act of 1999 (original applications, other than designs, filed on or after May 29, 2000).

> (a) Failure to take certain actions within specified time frames. Subject to the provisions of 35 U.S.C. 154(b) and this subpart, the term of an original patent shall be adjusted if the issuance of the patent was delayed due to the failure of the Office to:
>
> (1) Mail at least one of a notification under 35 U.S.C. 132 or a notice of allowance under 35 U.S.C. 151 not later than fourteen months after the date on which the application was filed under 35 U.S.C. 111(a) or fulfilled the requirements of 35 U.S.C. 371 in an international application;
>
> ...
>
> (6) Issue the patent within for months after the date the issue fee was paid.

[5] A first Office action was not mailed until November 30, 2005, fourteen months and 657 days after the application filing date, December 12, 2002.

2d 138, 88 U.S.P.Q. 2d 1538 (D.D.C. 2008). Patentee asserts that pursuant to Wyeth, a PTO delay under §154(b)(1)(A) overlaps with a delay under §154(b)(1)(B) only if the delays "occur on the same day." Patentee maintains that the 107 day period accorded pursuant to 37 CFR 1.702(a)(6) overlaps with the period under § 1.702(b). Patentee asserts that the total non-overlapping PTO delay under §154(b)(1)(A) & (B) is 1652 (764 + 995 - 107) days as these periods do not occur on the same day. Further, given the applicant delay of 428 days, patentee asserts entitlement to 1224 (1652 - 428) days of patent term adjustment.

OPINION

Patentee's interpretation of the period of overlap has been considered, but found inconsistent with the Office's interpretation of the overlap provision, 35 U.S.C. 154(b)(2)(A). 35 U.S.C. 154(b)(2)(A) limits the adjustment of patent term, as follows:

> to the extent that the periods of delay attributable to grounds specified in paragraph (1) overlap, the period of any adjustment granted under this subsection shall not exceed the actual number of days the issuance of the patent was delayed.

As explained in *Explanation of 37 CFR 1.703(f)*[6] *and of the United States Patent and Trademark Office Interpretation of 35 U.S.C. 154(b)(2)(A)*, 69 Fed. Reg. 34283 (June 21, 2004), the Office interprets 35 U.S.C. 154(b)(2)(A) as permitting either patent term adjustment under 35 U.S.C. 154(b)(1)(A)(i)-(iv), or patent term adjustment under 35 U.S.C. 154(b)(1)(B), but not as permitting patent term adjustment under both 35 U.S.C. 154(b)(1)(A)(i)-(iv) and 154(b)(1)(B). Accordingly, the Office implements the overlap provision as follows:

> If an application is entitled to an adjustment under 35 U.S.C. 154(b)(1)(B), the entire period during which the

---

[6] Likewise, 37 CFR 1.703(f) provides that:

> To the extent that periods of delay attributable to the grounds specified in §1.702 overlap, the period of adjustment granted under this section shall not exceed the actual number of days the issuance of the patent was delayed.

application was pending (except for periods excluded under 35 U.S.C. 154(b)(1)(B)(i)-(iii)), and not just the period beginning three years after the actual filing date of the application, is the period of delay under 35 U.S.C. 154(b)(1)(B) in determining whether periods of delay overlap under 35 U.S.C. 154(b)(2)(A). Thus, any days of delay for Office issuance of the patent more than 3 years after the filing date of the application, which overlap with the days of patent term adjustment accorded prior to the issuance of the patent will not result in any additional patent term adjustment. See 35 U.S.C. 154(b)(1)(B), 35 U.S.C. 154(b)(2)(A), and 37 CFR § 1.703(f). See *Changes to Implement Patent Term Adjustment Under Twenty Year Term; Final Rule*, 65 Fed. Reg. 54366 (Sept. 18, 2000). See also *Revision of Patent Term Extension and Patent Term Adjustment Provisions; Final Rule*, 69 Fed. Reg. 21704 (April 22, 2004), 1282 Off. Gaz. Pat. Office 100 (May 18, 2004). See also *Explanation of 37 CFR 1.703(f) and of the United States Patent and Trademark Office Interpretation of 35 U.S.C. 154(b)(2)(A)*, 69 Fed. Reg. 34283 (June 21, 2004).

Further, as stated in the *Explanation of 37 CFR 1.703(f) and of the United States Patent and Trademark Office Interpretation of 35 U.S.C. 154(b)(2)(A)*, the Office has consistently taken the position that if an application is entitled to an adjustment under the three-year pendency provision of 35 U.S.C. 154(b)(1)(B), the entire period during which the application was pending before the Office (except for periods excluded under 35 U.S.C. 154(b)(1)(B)(i)-(iii)), and not just the period beginning three years after the actual filing date of the application, is the relevant period under 35 U.S.C. 154(b)(1)(B) in determining whether periods of delay "overlap" under 35 U.S.C. 154(b)(2)(A).

This interpretation is consistent with the statute. Taken together the statute and rule provide that to the extent that periods of delay attributable to grounds specified in 35 U.S.C. 154(b)(1) and in corresponding §1.702 overlap, the period of adjustment granted shall not exceed the actual number of days the issuance of the patent was delayed.

In this instance, the relevant period under 35 U.S.C. 154(b)(1)(B) in determining whether periods of delay "overlap" under 35 U.S.C. 154(b)(2)(A) is the period during which the

application was pending before the Office beginning on the application filing date under 35 U.S.C. 111(a), December 12, 2002, and ending on the date of issuance of the patent, September 2, 2008 (not including any other periods excluded under 35 U.S.C. 154(b)(1)(B)(i)-(iii)).

Pursuant to 35 U.S.C. 154(b)(1)(A) and 37 CFR 1.702(a)(1) and (a)(4), (764) 657 + 107 days of patent term adjustment were accorded during the pendency of the application. Pursuant to 35 U.S.C. 154(b)(1)(B) and 37 CFR 1.702(b), 995 days of patent term adjustment accrued for Office issuance of the patent more than 3 years after the filing date of the application.

The 995 days of patent term adjustment under 37 CFR 1.702(b) overlap with the 764 days of patent term adjustment under 37 CFR 1.702(a)(1) and (a)(4). Entry of both the 995 days and the 764 days is neither permitted nor warranted. 995 days is the actual number of days issuance of the patent was delayed.

Accordingly, at issuance, the Office properly entered 231 days of adjustment pursuant to 37 CFR 1.702(b) for a total of the greater period of 995 days for Office delay.

CONCLUSION

In view thereof, the Office affirms that the revised determination of patent term adjustment at the time of the issuance of the patent is 567 days (995 days of Office delay - 428 days of applicant delay).

The Office acknowledges submission of the $200.00 fee set forth in 37 CFR 1.18(e). No additional fees are required.

Telephone inquiries specific to this matter should be directed to Attorney Douglas I. Wood, at (571) 272-3231.

Nancy Johnson
Senior Petitions Attorney
Office of Petitions

UNITED STATES PATENT AND TRADEMARK OFFICE

COMMISSIONER FOR PATENTS
UNITED STATES PATENT AND TRADEMARK OFFICE
P.O. BOX 1450
ALEXANDRIA, VA 22313-1450
www.uspto.gov
dw 10-03

Paper No. 5

NIXON & VANDERHYE P.C.
8TH FLOOR
1100 NORTH GLEBE RD.
ARLINGTON VA 22201-4714

COPY MAILED

OCT 21 2003

OFFICE OF PETITIONS

In re Application of
Arinci et al.
Application No. 10/319,462
Filed: 28 March, 2003
Attorney Docket No. 3816-39

: DECISION GRANTING PETITION

This is a decision in reference to the communication entitled "Submission of Priority Document and Substitute Drawings" filed on 28 March, 2003, which is treated as a petition under 37 CFR 1.182, requesting that the above-referenced application be accorded a filing date of 28 March, 2003 with Figure 1-6 containing in an Italian priority document as a part of the original disclosure.

The petition is **GRANTED**

The application was filed on 16 December, 2002. On 31 January, 2003, Initial Patent Examination Division mailed a "Notice of Omitted Items in a Nonprovisional Application," stating that the application had been accorded a filing date of 16 December, 2002, but that Figures 5 & 6 described in the specification appeared to have been omitted from the application.

In response, on 28 March, 2003, the present petition was filed, accompanied by a copy of Italian Patent Application No. M12001A002783. Petitioners now assert that the drawings filed with the original application papers were not the correct drawing figures for the present application, but that the correct drawing figures are containing in the Italian application, which was incorporated by reference on the transmittal letter for the present application. It is noted that petitioners additionally supplied five (5) sheets of substitute drawings containing six (6) drawing figures and a supplemental declaration.

It is noted that the application transmittal sheet filed with the original application papers states that the present application claims priority to Italian application No. M12001A002783, filed 21 December, 2001, "the entire content of which is hereby incorporated by reference in this application."

Pursuant to MPEP 608.01(p), the petition is granted. Petitioner has supplied a copy of the material incorporated by reference.

The application will be processed and examined using the five (5) sheets of drawings containing six (6) figures containing in the Italian application. For administrative convenience, the Office will prepare a copy of the five (5) sheets of drawings containing six drawing (6) figures present in the Italian patent application. Petitioners are not entitled to a filing date of 28 March, 2003, using the five sheets of substitute drawings, however, because only the Italian application, not the five (5) sheets of substitute drawings, were incorporated by reference in the original application papers filed on 16 December, 2002. Additionally, the three (3) sheets of drawings present on filing will not be used for processing or examination, but will be retained in the application file.

The five (5) sheets of substitute drawings will not be used for filing date purposes, but will be considered replacement drawings.

The replacement drawings filed on 28 March, 2003, are not part of the original disclosure and must be reviewed by the examiner for new matter.

As this petition resulted from applicants' error, a petition of $130.00 is due and will be charged to counsel's deposit account, No. 14-1140, as authorized on the transmittal letter filed on 16 December, 2002.

The application is being returned to the Office of Initial Patent Examination for reprocessing using the application papers filed on 16 December, 2002, and the five (5) sheets of drawings contained in the Italian priority document supplied with the present petition, and for an indication in Office records that five (5) sheets of drawings were present on filing.

Telephone inquiries specific to this matter should be directed to the undersigned at (703) 308-6918.

DWood

Douglas I. Wood
Senior Petitions Attorney
Office of Petitions

UNITED STATES PATENT AND TRADEMARK OFFICE

COMMISSIONER FOR PATENTS
UNITED STATES PATENT AND TRADEMARK OFFICE
P.O. BOX 1450
ALEXANDRIA, VA 22313-1450
www.uspto.gov

Paper No. 8

ARTHUR WU
No. 22, Alley 28 Lane 360
Chung Shan Road
She Kou Village, Shen Kang Hsiang
Taichung TW TAIWAN

COPY MAILED

FEB 08 2006

OFFICE OF PETITIONS

In re Application of :
Arthur Wu :
Application No. 10/319,480 : ON PETITION
Filed: December 16, 2002 :
Attorney Docket No. PR-04-US :

This is a decision on the petition under 37 CFR 1.137(b), filed July 5, 2005, to revive the above-identified application.

The petition is **DISMISSED**.

Any request for reconsideration of this decision must be submitted within TWO (2) MONTHS from the mail date of this decision. Extensions of time under 37 CFR 1.136(a) are permitted. The reconsideration request should include a cover letter entitled "Renewed Petition under 37 CFR 1.137(b)." This is **not** a final agency action within the meaning of 5 U.S.C. § 704.

The above-identified application became abandoned for failure to reply in a timely manner to the Notice to File Missing Parts of Nonprovisional Application (Notice) mailed January 31, 2003. The Notice set a period for reply of two(2) months from the mail date of the Notice. No extension of time under the provisions of 37 CFR 1.136(a) were obtained. Accordingly, the above-identified application became abandoned on April 1, 2003.

A grantable petition under 37 CFR 1.137(b) must be accompanied by: (1) the required reply, unless previously filed; (2) the petition fee as set forth in 37 CFR 1.17(m); (3) a statement that the entire delay in filing the required reply from the due date for the reply until the filing of a grantable petition pursuant to 37 CFR 1.137(b) was unintentional; and (4) any terminal disclaimer (and fee as set forth in 37 CFR 1.20(d)) required by 37 CFR 1.137(d). Where there is a question as to whether either the abandonment or the delay in filing a petition under 37 CFR 1.137 was unintentional, the Commissioner may require additional information. See MPEP 711.03(c)(III)(C) and (D). The instant petition lacks item(s) (1).

Applicant submitted $375.00 for the statutory basis filing fee, however, effective December 8, 2004, the basis filing fee for utility increased to $395.00. Therefore, the fee deficiency of $20.00 is required.

It is not apparent whether the person signing the statement of unintentional delay was in a position to have firsthand or direct knowledge of the facts and circumstances of the delay at issue. Nevertheless, such statement is being treated as having been made as the result of a reasonable inquiry into the facts and circumstances of such delay. See 37 CFR 10.18(b) and Changes to Patent Practice and Procedure; Final Rule Notice, 62 Fed. Reg. 53131, 53178 (October 10, 1997), 1203 Off. Gaz. Pat. Office 63, 103 (October 21, 1997). In the event that such an inquiry has not been made, petitioner must make such an inquiry. If such inquiry results in the discovery that it is not correct that the entire delay in filing the required reply from the due date for the reply until the filing of a grantable petition pursuant to 37 CFR 1.137(b) was unintentional, petitioner must notify the Office.

There is no indication that the person signing the petition was ever given a power of attorney or authorization of agent to prosecute the application. If the person signing the petition desires to receive future correspondence regarding this application, the appropriate power of attorney or authorization of agent must be submitted. While a courtesy copy of this decision is being mailed to the person signing the petition, all future correspondence will be directed to the address currently of record until appropriate instructions are received.

Further correspondence with respect to this matter should be addressed as follows:

By Mail:
Mail Stop PETITION
Commissioner for Patents
P. O. Box 1450
Alexandria, VA 22313-1450

By hand:
U. S. Patent and Trademark Office
Customer Service Window, Mail Stop Petitions
Randolph Building
401 Dulany Street
Alexandria, VA 22314

The centralized facsimile number is **(571) 273-8300.**

Telephone inquiries concerning this decision should be directed to the undersigned at (571) 272-3213.

Cheryl Gibson-Baylor

Cheryl Gibson-Baylor
Petitions Examiner
Office of Petitions
Office of the Deputy Commissioner
for Patent Examination Policy

John H. Thomas
536 Granite Avenue
Richmond, Virginia 23226

UNITED STATES PATENT AND TRADEMARK OFFICE

Commissioner for Patents
United States Patent and Trademark Office
P.O. Box 1450
Alexandria, VA 22313-1450
www.uspto.gov

John H. Thomas, P.C.
536 Granite Avenue
Richmond VA 23226

COPY MAILED

FEB 28 2006

OFFICE OF PETITIONS

In re Application of :
Arthur Wu :
Application No. 10/319,480 : ON PETITION
Filed: December 16, 2002 :
Attorney Docket No. Wu 1 :

This is a renewed decision on the petition under 37 CFR 1.137(b), filed February 16, 2006, to revive the above-identified application.

The petition is **GRANTED**.

The Revocation of Power of Attorney and Appointment of New Attorney filed February 16, 2005 has been accepted.

Telephone inquiries concerning this decision should be directed to the undersigned at (571)272-3213.

The application file is being forwarded to the Office of Initial Patent Examination for further processing.

Cheryl Gibson-Baylor

Cheryl Gibson-Baylor
Petitions Examiner
Office of Petitions

#3

UNITED STATES PATENT AND TRADEMARK OFFICE

COMMISSIONER FOR PATENTS
UNITED STATES PATENT AND TRADEMARK OFFICE
P.O. BOX 1450
ALEXANDRIA, VA 22313-1450
www.uspto.gov

MAILED

DEC 0 2 2003

TECHNOLOGY CENTER 2100

Paper No. 3

Paul J. Skwierawski
ANTONELLI, TERRY, STOUT &
KRAUS, LLP
1300 North Seventeenth Street, Suite 1800
Arlington, VA 22209

In re Application of:)
Nejedlo, et al.)
Application No. 10/319,517) **DECISION ON REQUEST FOR**
Filed: December 16, 2002) **WITHDRAWAL AS ATTORNEY**
For: TESTING METHODOLOGY AND)
APPARATUS FOR
INTERCONNECTS

This is a decision on the Request To Withdraw from Representation filed June 19, 2003.

A grantable request to withdraw as attorney of record should indicate thereon the present mailing addresses of the attorney(s) who is/are withdrawing from the record and of the applicant. The request for withdrawal must be signed by every attorney seeking to withdraw or contain a clear indication that one attorney is signing on behalf of another/others. A request to withdraw will not be approved unless at least 30 (thirty) days would remain between the date of approval and the later of the expiration date of a time to file a response or the expiration date of the maximum time period which can be extended under 37 C.F.R. § 1. 136(a). The effective date of withdrawal being the date of decision and not the date of request. See M.P.E.P. § 402.06. 37 C.F.R. § 1.36 further requires that the applicant or patent owner be notified of the withdrawal of the attorney or agent.

The request filed June 19, 2003 meets all the requirements. Accordingly the request is **GRANTED**.

All future communications from the Office will be directed to the below-listed address until otherwise notified by applicant. This correspondence address is provided by the withdrawn attorney(s). Applicant is reminded of the obligation to promptly notify the Patent and Trademark Office (Office) of any change in correspondence address to ensure receipt of all communications from the Office.

James R. Matthews

for Vincent N. Trans
Special Programs Examiner
Technology Center 2100
Computer Architecture and Software
(703) 305-9750

cc: c/o Grace Abercrombie
BLAKELY, SOKOLOFF, TAYLOR
& ZAFMAN LLP
1279 Oakmead Parkway
Sunnyvale, CA 94086

UNITED STATES PATENT AND TRADEMARK OFFICE

Commissioner for Patents
United States Patent and Trademark Office
P.O. Box 1450
Alexandria, VA 22313-1450
www.uspto.gov

VAXIM, INC. (JERRY LIN)
1383 PICCARD DRIVE
ROCKVILLE, MD 20850

COPY MAILED

FEB 14 2007

OFFICE OF PETITIONS

In re Application of :
Frank Q. Li et al :
Application No. 10/319,556 : ON PETITION
Filed: December 16, 2002 :
Attorney Docket No. 3781-007-27 :

This is a decision on the petition under 37 CFR 1.137(b), filed October 10, 2006, to revive the above-identified application.

The petition is **GRANTED**.

The above-identified application became abandoned for failure to reply in a timely manner to the non-final Office action mailed November 21, 2005, which set a shortened statutory period for reply of three (3) months. No extension of time under the provisions of 37 CFR 1.136(a) were obtained. Accordingly, the above-identified application became abandoned on February 22, 2006.

Telephone inquiries concerning this decision should be directed to Irvin Dingle at (571) 272-3210.

This matter is being referred to Technology Center AU 1643 for further processing.

Irvin Dingle
Petitions Examiner
Office of Petitions

UNITED STATES PATENT AND TRADEMARK OFFICE

Commissioner for Patents
United States Patent and Trademark Office
P.O. Box 1450
Alexandria, VA 22313-1450
www.uspto.gov

WESTERMAN, HATTORI, DANIELS & ADRIAN, LLP
1250 CONNECTICUT AVENUE, NW
SUITE 700
WASHINGTON DC 20036

COPY MAILED

NOV 26 2007

OFFICE OF PETITIONS

In re Application of :
Victor Hahn :
Application No. 10/319,596 : ON PETITION
Filed: December 16, 2002 :
Attorney Docket No.: **990380A** :

This is a decision on the petition filed October 2, 2007, under 37 CFR 1.181, to withdraw the holding of abandonment for the above-identified application.

The petition under 37 CFR 1.181 is **GRANTED**.

The application was held abandoned on August 2, 2007, for failure to timely submit a timely response to the Final Office Action mailed February 1, 2007, which set a three month period for reply. Accordingly, a Notice of Abandonment was mailed August 2, 2007.

Petitioner asserts that a response was filed August 1, 2007 with a three month extension of time and in support, petitioner has submitted, *inter alia*, a copy of the response in the form of a Notice of Appeal and a post card receipt date stamped August 1, 2007 by the USPTO.

A search of the application file and the USPTO records reveals that in fact, the Notice of Appeal and appropriate fees, were timely filed on August 1, 2007.

Accordingly, the response was timely and the Notice of Abandonment mailed August 2, 2007 was mailed in error and is hereby withdrawn. No petition fee is due and none has been charged.

The Notice of Appeal filed August 1, 2007 has been entered and made of record. Accordingly, the two (2)-month period for filing the Appeal Brief, accompanied by the fee required by law, runs from the date of this decision.

This matter is being referred to Technology Center 1679 for processing the Notice of Appeal.

Telephone inquiries concerning this matter may be directed to the undersigned Petitions Attorney at (571) 272-3212.

Patricia Faison-Ball

Patricia Faison-Ball
Senior Petitions Attorney
Office of Petitions

UNITED STATES PATENT AND TRADEMARK OFFICE

Commissioner for Patents
United States Patent and Trademark Office
P.O. Box 1450
Alexandria, VA 22313-1450
www.uspto.gov

BAKER & McKENZIE
PATENT DEPARTMENT
2001 ROSS AVENUE
SUITE 2300
DALLAS, TX 75201

COPY MAILED

MAY 0 5 2004

OFFICE OF PETITIONS

In re Application of	:	
Gene C. Koch et al	:	
Application No. 10/319,631	:	DECISION GRANTING PETITION
Filed: December 16, 2002	:	UNDER 37 CFR 1.137(b)
Attorney Docket No. 95156159.107001	:	

This is a decision on the petition under 37 CFR 1.137(f), filed march 26, 2004, which is being treated under 37 CFR 1.137(b), to revive the instant nonprovisional application for failure to timely notify the U.S. Patent and Trademark (USPTO) of the filing of an application in a foreign country, or under a multinational treaty that requires publication of applications eighteen months after filing. *See* 37 CFR 1.137(f).

The petition is **GRANTED**.

The instant nonprovisional application is the subject of an application filed in an eighteen month publication country on December 12, 2003. However, the USPTO was unintentionally not notified of this filing within 45 days subsequent to the filing of the subject application in an eighteen month publication country.

In view of the above, this application became abandoned pursuant to 35 U.S.C. § 122(b)(2)(B)(iii) and 37 CFR 1.213 (c) for failure to timely notify the Office of the filing of an application in a foreign country or under a multilateral international agreement that requires publication of applications 18 months after filing.

A petition to revive an application abandoned pursuant to 35 U.S.C. 122(b)(2)(B)(iii) for failure to notify the USPTO of a foreign filing must be accompanied by:

(1) the required reply which is met by the notification of such filing in a foreign country or under a multinational treaty;
(2) the petition fee as set forth in 37 CFR 1.17(m); and
(3) a statement that the entire delay in filing the required reply from the due date of the reply until the filing of a grantable petition was unintentional.

The instant petition has been found to be in compliance with 37 CFR 1.137(b). Accordingly, the failure to timely notify the USPTO of a foreign or international filing within 45 days after the

date of filing of such foreign or international application as provided by 35 U.S.C. § 122(b)(2)(B)(iii) and 37 CFR 1.213 (c) is accepted as having been unintentionally delayed.

The previous Request and Certification under 35 U.S.C. § 122(b)(2)(B)(I) has been previously rescinded.

Any inquiries concerning this decision may be directed to Wan Laymon at (703) 306-5685.

The application file is being referred to Technology Center AU 2875.

Wan Laymon
Petitions Examiner
Office of Petitions
Office of the Deputy Commissioner
for Patent Examination Policy

UNITED STATES PATENT AND TRADEMARK OFFICE

Commissioner for Patents
United States Patent and Trademark Office
P.O. Box 1450
Alexandria, VA 22313-1450
www.uspto.g

ADE & COMPANY
1700-360 MAIN STREET
WINNIPEG, MB R3C 3Z3 CA CANADA

COPY MAILED

JUL 3 1 2008

OFFICE OF PETITIONS

In re Application of
Banerjee et al
Application No. 10/319,645
Filed: December 16, 2002
Attorney Docket No. 85069-102

: DECISION ON PETITION

This is a decision on the petition under the unintentional provisions of 37 CFR 1.137(b), filed May 7, 2008, to revive the above-identified application.

The petition is **GRANTED**.

The application became abandoned for failure to reply in a timely manner to the non-final Office action mailed September 24, 2007, which set a shortened statutory period for reply of three (3) months. No extensions of time under the provisions of 37 CFR 1.136(a) were obtained. Accordingly, the application became abandoned on December 25, 2007. A Notice of Abandonment was mailed May 5, 2008.

The petition satisfies the requirements of 37 CFR 1.137(b) in that petitioner has supplied (1) the reply in the form of an Amendment, (2) the petition fee of $770.00, and (3) an adequate statement of unintentional delay.

Further, the address given on the petition differs from the new address of record. A courtesy copy of this decision is being mailed to the address given on the petition; however, the Office will mail all future correspondence solely to the address of record.

Telephone inquiries concerning this decision should be directed to Joan Olszewski at (571) 272-7751.

This application is being referred to Technology Center AU 1645 for appropriate action by the Examiner in the normal course of business on the reply received.

Liana Walsh
Petitions Examiner
Office of Petitions

cc: Michael R. Williams
2157 Henderson Highway
Winnipeg, Manitoba Canada R2G 1P9

SPE RESPONSE FOR CERTIFICATE OF CORRECTION

Paper No.: _____

DATE : March 19 2009

TO SPE OF : ART UNIT 2115
SUBJECT : Request for Certificate of Correction for Appl. No.: 10/319667 / 7028196
Please respond to this request for a certificate of correction within 7 days.

FOR IFW FILES:

Please review the requested changes/corrections as shown in the **COCIN** document(s) in the IFW application image. No new matter should be introduced, nor should the scope or meaning of the claims be changed.

Please complete the response (see below) and forward the completed response to scanning using document code **COCX**.

FOR PAPER FILES:

Please review the requested changes/corrections as shown in the attached certificate of correction. Please complete this form (see below) and forward it with the file to:

Certificates of Correction Branch (CofC)
South Tower - 9A22
Palm Location 7580

Magdalene Talley
Certificates of Correction Branch
703-308-9390 ext. 120

Thank You For Your Assistance

The request for issuing the above-identified correction(s) is hereby:
Note your decision on the appropriate box.

- ☑ **Approved** — **All** changes apply.
- ☐ **Approved in Part** — Specify below which changes **do not** apply.
- ☐ **Denied** — State the reasons for denial below.

Comments: _____

_____

_____

_____

_____

/Thomas Lee/ — **SPE**

2115 — **Art Unit**

UNITED STATES PATENT AND TRADEMARK OFFICE

Commissioner for Patents
United States Patent and Trademark Office
P.O. Box 1450
Alexandria, VA 22313-1450
www.uspto.gov

Paper No. 4

John S. Pratt, Esq.
Kilpatrick Stockton, LLP
1100 Peachtree Street
Suite 2800
Atlanta, GA 30309

COPY MAILED

JUL 2 9 2003

OFFICE OF PETITIONS

In re Application of
Hartson et al.
Application No. 10/319,671
Filed: August 9, 2002
Attorney Docket No. S0465/285290

DECISION GRANTING PETITION

This is a decision on the petition filed May 15, 2003, requesting that the above-identified application be accorded a filing date of August 9, 2002, with pages 60 and 64 of the specification as part of the original disclosure.

On August 9, 2002, applicants filed the above-identified application. On January 14, 2003, the Office of Initial Patent Examination mailed a Notice to File Corrected Application Papers, stating, in pertinent part, that the application had been accorded a filing date of August 9, 2002, and advising applicants that pages 60 and 64 of the specification appeared to have been omitted.

In response, on May 15, 2003, applicants filed, inter alia, the present petition, the petition fee, an extension of time fee, and a copy of applicants' postcard receipt acknowledging receipt of 121 pages of description, 11 pages of claims 1-35 and 1 page of abstract. Additionally, applicants submitted a copy of pages 60 and 64 of the specification with the present petition.

Upon review of the record, pages 60 and 64 of the specification, deposited on August 9, 2002, have not been located among the application papers. However, the evidence is convincing that the application papers deposited on August 9, 2002, included pages 60 and 64, which were subsequently misplaced in the United States Patent and Trademark Office. Therefore, the application, including pages 60 and 64 of the specification, was complete on filing and will be granted a filing date of August 9, 2002.

Accordingly, the petition is granted. The requirement for submission of the omitted items was sent in error and is hereby vacated. Accordingly, the $130.00 petition fee is unnecessary and will be credited to Deposit Account No. 11-0855.

The application file is being forwarded to the Office of Initial Patent Examination for further processing with a filing date of August 9, 2002, using pages 60 and 64 of the specification submitted on petition, and for the mailing of a corrected filing receipt.

Any inquiries related to this decision should be directed to the undersigned at (703) 306-5589.

Christina Tartera Donnell

Christina Tartera Donnell
Senior Petitions Attorney
Office of Petitions

UNITED STATES PATENT AND TRADEMARK OFFICE

Commissioner for Patents
United States Patent and Trademark Office
P.O. Box 1450
Alexandria, VA 22313-1450
www.uspto.gov

JOHN S. PRATT, ESQ
KILPATRICK, STOCKTON, LLP
1100 Peachtree Street, Suite 2800
Atlanta, GA. 30309

COPY MAILED

JAN 15 2008

OFFICE OF PETITIONS

In re Application of :
Ted Hartson et al :
Application No. 10/319,671 : DECISION ON PETITION
Filed: August 9, 2002 :
Attorney Docket No. S0465/285290 :

This is a decision on the petition under the unintentional provisions of 37 CFR 1.137(b), filed March 30, 2007, to revive the above-identified application.

The petition is **GRANTED.**

This application became abandoned for failure to timely pay the issue and publication fees on or before December 28, 2006, as required by the Notice of Allowance and Fee(s) Due, mailed September 28, 2006. Accordingly, the date of abandonment of this application is December 29, 2006.

The petition satisfies the requirements of 37 CFR 1.137(b) in that petitioner has supplied (1) the reply in the form of payment of the issue fee of $700.00 and the publication fee of $300.00, (2) the petition fee of $750.00; and (3) a proper statement of unintentional delay.

There is no indication that the person signing the petition was ever given a power of attorney or authorization of agent to prosecute the application. If the person signing the petition desires to receive future correspondence regarding this application, the appropriate power of attorney or authorization of agent must be submitted. All future correspondence will continue to be directed to the address currently of record until appropriate instructions are received.

Telephone inquiries concerning this decision should be directed to Thurman K. Page at (571) 272-0602.

This application is being referred to Publishing Division for processing into a patent.

David Bucci
Petitions Examiner
Office of Petitions

UNITED STATES PATENT AND TRADEMARK OFFICE

UNITED STATES DEPARTMENT OF COMMERCE
United States Patent and Trademark Office
Address: COMMISSIONER FOR PATENTS
P.O. Box 1450
Alexandria, Virginia 22313-1450
www.uspto.gov

Kramer & Amado, P.C.
1725 Duke Street
Suite 240
Alexandria, VA 22314

Mail Date: 04/20/2010

Applicant	: Jerome Cornet	: DECISION ON REQUEST FOR
Patent Number	: 7599315	: RECALCULATION of PATENT
Issue Date	: 10/06/2009	: TERM ADJUSTMENT IN VIEW
Appliction No	: 10/319,675	: OF WYETH AND NOTICE OF INTENT TO
Filed	: 12/16/2002	: ISSUE CERTIFICATE OF CORRECTION
		:

The Request for Recalculation is **GRANTED** to the extent indicated.

The patent term adjustment has been determined to be **1433** days. The USPTO will *sua sponte* issue a certificate of correction reflecting the amount of PTA days determined by the recalculation.

Prior to the issuance of the certificate of correction, the USPTO will afford patentee an opportunity to be heard and request reconsideration. Accordingly, patentee has **one month or thirty (30) days**, whichever is longer, to file a request for reconsideration of this patent term adjustment calculation. See 35 U.S.C. 154(b)(3)(B)(ii) and 37 CFR 1.322(a)(4). No extensions of time will be granted under 37 CFR 1.136.

Patentee should use document code PET.OP if electronically filing a request for reconsideration of this patent term adjustment calculation. The patentee must also include the information required by 37 CFR 1.705(b)(2) and the fee required by 37 CFR 1.18(e). If patentee does not file a timely request for reconsideration of this patent term adjustment calculation including the information required by 37 CFR 1.705(b)(2) and the fee required by 37 CFR 1.18(e), the USPTO will issue a certificate of correction reflecting the PTA determination noted above.

Patentee should be aware that in order to preserve the right to review in the United States District Court for the District of Columbia of the USPTO patent term adjustment determination, patentee must ensure that he or she also take the steps required under 35 U.S.C. 154(b)(4)(A) in a timely manner. Nothing in the request for recalculation should be construed as providing an alternative time frame for commencing a civil action under 35 U.S.C. 154(b)(4)(A).

Any questions concerning this decision should be directed to the Office of Patent Legal Administration at 571-272-7702.

cc DT 7/10/03

UNITED STATES PATENT AND TRADEMARK OFFICE

37149

COMMISSIONER FOR PATENTS
UNITED STATES PATENT AND TRADEMARK OFFICE
P.O. BOX 1450
ALEXANDRIA, VA 22313-1450
www.uspto.gov

OIPE JC34
JUL 25 2003
PATENT & TRADEMARK OFFICE

Paper No. 6

KENYON & KENYON
1500 K STREET, N.W., SUITE 700
WASHINGTON DC 20005

COPY MAILED

JUL 0 8 2003

OFFICE OF PETITIONS

In re Application of :
Mukherjee, Rathnan, Ramachandran, Patel, :
Balakrishnan, Frey, Kadam, Mukhopadhyay : DECISION REFUSING STATUS
Application No. 10/319,682 : UNDER 37 CFR 1.47(a)
Filed: December 16, 2002 :
Attorney Docket No. 22707/14565

This is in response to the petition filed under 37 CFR 1.47(a) on May 8, 2003.

The petition is **DISMISSED**.

Rule 47 applicant is given TWO MONTHS from the mailing date of this decision to respond, correcting the below-noted deficiencies. Any response should be entitled "Request for Reconsideration of Petition Under 37 CFR 1.47(a) and may include an oath or declaration executed by the inventor. **Failure to respond will result in abandonment of the application**. Any extensions of time will be governed by 37 CFR 1.136(a).

The above-identified application was filed on December 16, 2002, without an executed oath or declaration and naming: Amit Mukherjee, Anantha Rathnam, Lakshmi Ramachandran, Chirayu Patel, Santosh Balakrishnan, Martin Frey, Akshay Kadam, and Rishi Mukhopadhyay as joint inventors..

Accordingly, on January 28, 2003, a "Notice To File Missing Parts of Nonprovisional Application" was mailed, requiring an executed oath or declaration, and a surcharge for their late filing. A two month period for reply was set.

In response, on May 8, 2003, the instant petition was filed along with a documentary evidence supporting petitioner's claim that inventor Frey was unavailable to join the prosecution of the above-cited application.

A grantable petition under 37 CFR 1.47(a) requires: (1) proof that the non-signing inventor cannot be reached or refuses to sign the oath or declaration after having been presented with the application papers (specification, claims and drawings); (2) an acceptable oath or declaration in compliance with 35 U.S.C. §§ 115 and 116; (3) the petition fee; and (4) a statement of the last known address of the non-signing

ENTERED 7-10-03

inventor. Applicant lacks items (1) and (3) set forth above.

Relative to item (1), petitioner has not provided sufficient proof that inventor Frey is unavailable to join the prosecution of the application. Section 409.03(d) of the Manual of Patent Examining Procedure provides, in pertinent part, that:

> [w]here inability to find or reach a nonsigning inventor "after diligent effort" is the reason for filing under 37 CFR 1.47, a statement of facts should be submitted that fully describes the exact facts which are relied on to establish that a diligent effort was made . . . Copies of documentary evidence, such as internets eraches, certified mail return receipts . . . that support a finding that the nonsigning inventor could not be found or reached should be made part of the statement. The steps taken to locate the whereabouts of the nonsigning invnetor should be included in the statement of facts. It is important that the statement contain facts as oppossed to conclusions.

The statement provided by B. Delano Jordan only indicates that the copies of the complete application were sent via certified mail to the last known address of inventor Frey and that no response was received from inventor Frey. The statement is inadequate in that it does not describe the "diligent efforts" undertaken to locate inventor Frey. Further, no copy of a signed certified mail return receipt evidencing that inventor Frey did receive the application was found among the petition papers, despite petitioner's assertion to the contrary. With any renewed petition filed, petitioner must describe the efforts undertaken to locate inventor Frey and, if possible, provide a copy of the certfied mail return receipt signed by inventor Frey.

As to item (3), the fee for a petition under 37 CFR 1.47 is $130. The petition fee will be charged deposit account to 11-0600.

Further correspondence with respect to this matter should be addressed as follows:

By mail:

Mail Stop Petitions
Commissioner for Patents
P.O. Box 1450
Alexandria, VA 22313-1450

By FAX: (703) 308-6916
Attn: Office of Petitions

By hand: Crystal Plaza Four, Suite 3C23
2201 S. Clark Place
Arlington, VA

Telephone inquiries concerning this matter may be directed to the undersigned Petitions Attorney at (703)305-4497.

Kenya A. McLaughlin
Senior Petitions Attorney
Office of Petitions

UNITED STATES PATENT AND TRADEMARK OFFICE

Commissioner for Patents
United States Patent and Trademark Office
P.O. Box 1450
Alexandria, VA 22313-1450
www.uspto.gov

STEVEN A. NIELSEN
ALLMAN & NIELSEN, P.C
100 LARKSPUR LANDING CIRCLE
SUITE 212
LARKSPUR, CA 94939

COPY MAILED

JAN 16 2008

OFFICE OF PETITIONS

In re Application of :
David Beatty JONES :
Application No. 10/319,699 : DECISION ON PETITION
Filed: December 12, 2002 :
Attorney Docket No. Jones 101 :

This is a decision on the petition under the unintentional provisions of 37 CFR 1.137(b), filed June 21, 2007, to revive the above-identified application.

The petition is **GRANTED**.

The application became abandoned for failure to reply in a timely manner to the non-final Office action mailed, April 7, 2005, which set a shortened statutory period for reply of three (3) months. No extensions of time under the provisions of 37 CFR 1.136(a) were obtained. Accordingly, the application became abandoned on October 8, 2005.

The petition satisfies the requirements of 37 CFR 1.137(b) in that petitioner has supplied (1) the reply in the form of an amendment, (2) the petition fee of $750, and (3) a proper statement of unintentional delay.

An extension of time under 37 CFR 1.136 must be filed prior to the expiration of the maximum extendable period for reply. See In re Application of S., 8 USPQ2d 1630, 1631 (Comm'r Pats. 1988). Since the $510 extension of time fee submitted with the petition on June 21, 2007 was subsequent to the maximum extendable period for reply, petitioner may request a refund of this fee by writing to the following address: Mail Stop 16, Commissioner for Patents, P. O. Box 1450, Alexandria, VA 22313-1450. A copy of this decision should accompany petitioner's request.

It is also noted that although the person signing the statement of unintentional delay was in a position to have firsthand or direct knowledge of the facts and circumstances of the delay at issue, the petitioner no longer retains power of attorney in this application. If the person signing

the petition desires to receive future correspondence regarding this application, the appropriate power of attorney document must be submitted. While a courtesy copy of this decision is being mailed to the person signing the petition, all future correspondence will be directed to the address currently of record until appropriate instructions are received.

Telephone inquiries concerning this decision should be directed to undersigned at (571) 272-1642.

This application is being referred to Technology Center AU 3747 for appropriate action by the Examiner in the normal course of business on the reply received June 21, 2007.

April M. Wise
Petitions Examiner
Office of Petitions

cc: GLENN C. BROWN
777 NW WALL STREET
#308
BEND, OR 97701

UNITED STATES PATENT AND TRADEMARK OFFICE

Commissioner for Patents
United States Patent and Trademark Office
P.O. Box 1450
Alexandria, VA 22313-1450
www.uspto.gov

c/o Deere & Company
One John Deere Place
Moline, IL 61265-8098

COPY MAILED

APR 21 2005

OFFICE OF PETITIONS

In re Application of
Robert George SITZBERGER
Application No. 10/319,718
Filed: December 13, 2002
Attorney Docket No. 15620-US

: DECISION GRANTING PETITION
: UNDER 37 CFR 1.137(b)

This is a decision on the petition under 37 CFR 1.137(b), filed December 27, 2004, to revive the above-identified application.

The petition is **GRANTED**.

The above-identified application became abandoned for failure to reply within the meaning of 37 CFR 1.113 in a timely manner to the final Office action mailed June 2, 2004, which set a shortened statutory period for reply of three (3) months. No extensions of time under the provisions of 37 CFR 1.136(a) were obtained. Accordingly, the above-identified application became abandoned on September 3, 2004. A Notice of Abandonment was mailed on January 4, 2005.

The petition satisfies the conditions for revival pursuant to the provisions of 37 CFR 1.137(b) in that (1) the reply in the form of an amendment placing the case in condition for allowance; (2) the petition fee; and (3) the required statement of unintentional delay have been received. Accordingly, the reply to the final Office action of June 2, 2004 is accepted as having been unintentionally delayed.

Telephone inquiries concerning this decision should be directed to Betsy L. Deppe at (571) 272-6052 or in her absence, the undersigned at (571) 272-3217.

This matter is being referred to Technology Center AU 3747.

Frances Hicks for

Brian Hearn
Petitions Examiner
Office of Petitions
Office of the Deputy Commissioner
for Patent Examination Policy

UNITED STATES PATENT AND TRADEMARK OFFICE

Commissioner for Patents
United States Patent and Trademark Office
P.O. Box 1450
Alexandria, VA 22313-1450
www.uspto.gov

FERNANDEZ & ASSOCIATES, LLP
PO BOX D
MENLO PARK, CA 94026-6102

DEC 05 2005

In re Application of:
ASHOK VITTAL et al.
Serial No.: 10/319,720
Filed: December 13, 2002
Attorney Docket No.: **FLEX-P001**

DECISION ON REQUEST TO WITHDRAW FROM RECORD

This is a decision on the request to withdraw as attorney of record under 37 C.F.R. § 1.36, filed April 25, 2005.

The request is **DISMISSED** as moot.

A review of the application file record reveals a proper revocation and power of attorney to attorney Peter Su was filed on May 04, 2005. As such, the power of attorney for the attorney requesting withdrawal has already been revoked. Accordingly, the present request is moot, and must be dismissed.

All future communications form the Office will continue to be directed to the below-listed address until otherwise notified by applicant.

Inquiries related to this decision should be directed to Jose G. Dees at (571) 272-1569.

Jose G. Dees, Special Programs Examiner
Technology Center 2800
Semiconductors, Electrical and Optical
Systems and Components

cc: LAW OFFICES OF PETER SU
999 GRARRITY WAY
SANTA CLARA, CA 95054

UNITED STATES PATENT AND TRADEMARK OFFICE

COMMISSIONER FOR PATENTS
UNITED STATES PATENT AND TRADEMARK OFFICE
P.O. BOX 1450
ALEXANDRIA, VA 22313-1450
www.uspto.gov

Paper No. 5

ROBERT PLATT BELL
8033 WASHINGTON ROAD
ALEXANDRIA, VA 22308

COPY MAILED

JUN 19 2003

OFFICE OF PETITIONS

In re Application of
Smith, et al.
Application No. 10/319,725
Filed: December 16, 2002
Attorney Docket No. RANN-0011

ON PETITION

This is a decision on the papers styled, "Miscellaneous Petition" filed on March 26, 2003, which is being treated as a petition under 37 CFR 1.53, requesting that the above-identified application be accorded a filing date of December 16, 2002, including pages 1 and 2 of the specification.

The application was filed on December 16, 2002. However, on March 21, 2003, the Office of Initial Patent Examination (OIPE) mailed a "Notice To File Missing Parts " (Notice) that stated the application had been accorded a filing date, but pages 1 and 2 of the specification appear to have been omitted.

In response, on March 26, 2003, the instant petition was submitted. The petition was accompanied by a copy of applicant's postcard receipt that acknowledges receipt of fifty-one (51) pages of specification on December 16, 2002. Petitioner notes that pages 1 and 2 of the specification contain the "scannable application cover sheets."

Pages 1 and 2 of the specification, as described by petitioner as the "scannable application cover sheets" have been located in the application file. Therefore, the application was complete for filing date purposes on filing.

In view of the above, the petition is granted.

The Notice mailed March 21, 2003, was mailed in error and is hereby vacated.

The $130.00 petition fee has not been charged.

This application will be returned to OIPE for further processing with a filing date of December 16, 2002, using the pages 1 and 2 of the specification that contain the "scannable application cover sheets," supplied on that date.

Telephone inquiries concerning this matter may be directed to Petitions Attorney Edward Tannouse at (703) 306-9200.

Edward J. Tannouse
Petitions Attorney
Office of Petitions
United States Patent and Trademark Office

UNITED STATES PATENT AND TRADEMARK OFFICE

Commissioner for Patents
United States Patent and Trademark Office
P.O. Box 1450
Alexandria, VA 22313-1450
www.uspto.gov

THE PROCTER & GAMBLE COMPANY
INTELLETUAL PROPERTY DIVISION
WINTON HILL TECHNICAL CENTER-
BOX 161, 6110 CENTER HILL AVENUE
CINCINNATI OH 45224

COPY MAILED

FEB 0 9 2006

OFFICE OF PETITIONS

In re Application of :
Fredrick William et al :
Application No. 10/319,742 : DECISION GRANTING PETITION
Filed: December 13, 2002 : UNDER 37 CFR 1.137(b)
Attorney Docket No. 8818M :

This is a decision on the petition under 37 CFR 1.137(b), filed August 19, 2005, to revive the above-identified application.

The petition is **GRANTED**.

The petition satisfies the conditions for revival pursuant to the provisions of 37 CFR 1.137(b) in that (1) the reply in the form of an amendment; (2) the petition fee; and (3) the required statement of unintentional delay have been received. Accordingly, the reply to the Nonfinal Rejection mailed December 28, 2004, is accepted as having been unintentionally delayed.

Telephone inquiries concerning this decision should be directed to the undersigned at (571) 272-3208.

This matter is being referred to Technology Center AU 1771.

Karen Creasy
Petitions Examiner
Office of Petitions
Office of the Deputy Commissioner
for Patent Examination Policy

PTO/SB/66 (03-09)
Approved for use through 03/31/2012. OMB 0651-0016
U.S. Patent and Trademark Office: U.S. DEPARTMENT OF COMMERCE
Under the Paperwork Reduction Act of 1995, no persons are required to respond to a collection of information unless it displays valid OMB control number.

PETITION TO ACCEPT UNINTENTIONALLY DELAYED PAYMENT OF MAINTENANCE FEE IN AN EXPIRED PATENT (37 CFR 1.378(c))

Patent Number	Issue Date (YYYY-MM-DD)	Application Number	Filing Date (YYYY-MM-DD)	Docket Number (if applicable)
6,896,113	2005-05-24	10/319,759	2002-12-13	A 91554

CAUTION: Maintenance fee (and surcharge, if any) payment must correctly identify: (1) the patent number and (2) the application number of the actual U.S. application leading to issuance of that patent to ensure the fee(s) is/are associated with the correct patent. 37 CFR 1.366(c) and (d).

SMALL ENTITY

☐ Patentee claims, or has previously claimed, small entity status. See 37 CFR 1.27.

LOSS OF ENTITLEMENT TO SMALL ENTITY STATUS

☐ Patentee is no longer entitled to small entity status. See 37 CFR 1.27(g)

NOT Small Entity

	Fee	Code
◉	3 ½ year	(1551)
○	7 ½ year	(1552)
○	11 ½ year	(1553)

Small Entity

	Fee	Code
○	3 ½ year	(2551)
○	7 ½ year	(2552)
○	11 ½ year	(2553)

SURCHARGE

The surcharge required by 37 CFR 1.20(i)(2) (Fee Code 1558) must be paid as a condition of accepting unintentionally delayed payment of the maintenance fee.

MAINTENANCE FEE (37 CFR 1.20(e)-(g))

The appropriate maintenance fee must be submitted with this petition.

STATEMENT

THE UNDERSIGNED CERTIFIES THAT THE DELAY IN PAYMENT OF THE MAINTENANCE FEE TO THIS PATENT WAS UNINTENTIONAL

PETITIONER(S) REQUEST THAT THE DELAYED PAYMENT OF THE MAINTENANCE FEE BE ACCEPTED AND THE PATENT REINSTATED

THIS PORTION MUST BE COMPLETED BY THE SIGNATORY OR SIGNATORIES

37 CFR 1.378(d) states: "Any petition under this section must be signed by an attorney or agent registered to practice before the Patent and Trademark Office, or by the patentee, the assignee, or other party in interest."

I certify, in accordance with 37 CFR 1.4(d)(4) that I am

◉ An attorney or agent registered to practice before the Patent and Trademark Office

○ A sole patentee

○ A joint patentee; I certify that I am authorized to sign this submission on behalf of all the other patentees.

○ A joint patentee; all of whom are signing this e-petition

○ The assignee of record of the entire interest

Patent Practitioner			
A signature of the applicant or representative is required in accordance with 37 CFR 1.33 and 10.18. Please see 37 CFR 1.4(d) for the form of the signature			
Signature	/Robert W. Becker/	Date (YYYY-MM-DD)	2009-07-31
Name	Robert W. Becker	Registration Number	26255

This collection of information is required by 37 CFR 1.378(c). The information is required to obtain or retain a benefit by the public which is to file (and by the USPTO to process) an application. Confidentiality is governed by 35 U.S.C. 122 and 37 CFR 1.11 and 1.14. This collection is estimated to take 1 hour to complete, including gathering, preparing, and submitting the completed application form to the USPTO. Time will vary depending upon the individual case. Any comments on the amount of time you require to complete this form and/ or suggestions for reducing this burden, should be sent to the Chief Information Officer, U.S. Patent and Trademark Office, U.S. Department of Commerce, P.O. Box 1450, Alexandria, VA 22313-1450. DO NOT SEND FEES OR COMPLETED FORMS TO THIS ADDRESS. **This form can only be used when in conjunction with EFS-Web. If this form is mailed to the USPTO, it may cause delays in reinstating the patent.**

Privacy Act Statement

The Privacy Act of 1974 (P.L. 93-579) requires that you be given certain information in connection with your submission of the attached form related to a patent application or patent. Accordingly, pursuant to the requirements of the Act, please be advised that: (1) the general authority for the collection of this information is 35 U.S.C. 2(b)(2); (2) furnishing of the information solicited is voluntary; and (3) the principal purpose for which the information is used by the U.S. Patent and Trademark Office is to process and/or examine your submission related to a patent application or patent. If you do not furnish the requested information, the U.S. Patent and Trademark Office may not be able to process and/or examine your submission, which may result in termination of proceedings or abandonment of the application or expiration of the patent.

The information provided by you in this form will be subject to the following routine uses:

1. The information on this form will be treated confidentially to the extent allowed under the Freedom of Information Act (5 U.S.C. 552) and the Privacy Act (5 U.S.C. 552a). Records from this system of records may be disclosed to the Department of Justice to determine whether the Freedom of Information Act requires disclosure of these records.

2. A record from this system of records may be disclosed, as a routine use, in the course of presenting evidence to a court, magistrate, or administrative tribunal, including disclosures to opposing counsel in the course of settlement negotiations.

3. A record in this system of records may be disclosed, as a routine use, to a Member of Congress submitting a request involving an individual, to whom the record pertains, when the individual has requested assistance from the Member with respect to the subject matter of the record.

4. A record in this system of records may be disclosed, as a routine use, to a contractor of the Agency having need for the information in order to perform a contract. Recipients of information shall be required to comply with the requirements of the Privacy Act of 1974, as amended, pursuant to 5 U.S.C. 552a(m).

5. A record related to an International Application filed under the Patent Cooperation Treaty in this system of records may be disclosed, as a routine use, to the International Bureau of the World Intellectual Property Organization, pursuant to the Patent Cooperation Treaty.

6. A record in this system of records may be disclosed, as a routine use, to another federal agency for purposes of National Security review (35 U.S.C. 181) and for review pursuant to the Atomic Energy Act (42 U.S.C. 218(c)).

7. A record from this system of records may be disclosed, as a routine use, to the Administrator, General Services, or his/her designee, during an inspection of records conducted by GSA as part of that agency's responsibility to recommend improvements in records management practices and programs, under authority of 44 U.S.C. 2904 and 2906. Such disclosure shall be made in accordance with the GSA regulations governing inspection of records for this purpose, and any other relevant (i.e., GSA or Commerce) directive. Such disclosure shall not be used to make determinations about individuals.

8. A record from this system of records may be disclosed, as a routine use, to the public after either publication of the application pursuant to 35 U.S.C. 122(b) or issuance of a patent pursuant to 35 U.S.C. 151. Further, a record may be disclosed, subject to the limitations of 37 CFR 1.14, as a routine use, to the public if the record was filed in an application which became abandoned or in which the proceedings were terminated and which application is referenced by either a published application, an application open to public inspections or an issued patent.

9. A record from this system of records may be disclosed, as a routine use, to a Federal, State, or local law enforcement agency, if the USPTO becomes aware of a violation or potential violation of law or regulation.

UNITED STATES PATENT AND TRADEMARK OFFICE

Commissioner for Patents
United States Patent and Trademark Office
P.O. Box 1450
Alexandria, VA 22313-1450
www.uspto.gov

In re Patent No. 6896113
Issue Date: May 24,2005
Application No. 10319759
Filed: December 13,2002
Attorney Docket No. A 91 554/LR

:
:DECISION GRANTING PETITION
:UNDER 37 CFR 1.378(c)
:

This is a decision on the electronic petition, filed July 31,2009 ,under 37 CFR 1.378(c) to accept the unintentionally delayed payment of the 3.5 year maintenance fee for the above-identified patent.

The petition is **GRANTED**.

The maintenance fee is accepted, and the above-identified patent reinstated as of July 31,2009 . This decision also constitutes notice that the fee has been accepted. An electronic copy of the petition and this decision has been created as an entry in the Image File Wrapper. Nevertheless, petitioner should print and retain an independent copy.

Telephone inquiries related to this electronic decision should be directed to the Electronic Business Center at 1-866-217-9197.

UNITED STATES PATENT AND TRADEMARK OFFICE

UNITED STATES DEPARTMENT OF COMMERCE
United States Patent and Trademark Office
Address: COMMISSIONER FOR PATENTS
P.O. Box 1450
Alexandria, Virginia 22313-1450
www.uspto.gov

TROP, PRUNER & HU, P.C.
1616 S. VOSS ROAD, SUITE 750
HOUSTON, TX 77057-2631

Mail Date: 04/21/2010

Applicant	: Tyler A. Lowrey	: DECISION ON REQUEST FOR
Patent Number	: 7589343	: RECALCULATION of PATENT
Issue Date	: 09/15/2009	: TERM ADJUSTMENT IN VIEW
Appliction No	: 10/319,764	: OF WYETH AND NOTICE OF INTENT TO
Filed	: 12/13/2002	: ISSUE CERTIFICATE OF CORRECTION
		:

The Request for Recalculation is **GRANTED** to the extent indicated.

The patent term adjustment has been determined to be **261** days. The USPTO will *sua sponte* issue a certificate of correction reflecting the amount of PTA days determined by the recalculation.

Prior to the issuance of the certificate of correction, the USPTO will afford patentee an opportunity to be heard and request reconsideration. Accordingly, patentee has **one month or thirty (30) days**, whichever is longer, to file a request for reconsideration of this patent term adjustment calculation. See 35 U.S.C. 154(b)(3)(B)(ii) and 37 CFR 1.322(a)(4). No extensions of time will be granted under 37 CFR 1.136.

Patentee should use document code PET.OP if electronically filing a request for reconsideration of this patent term adjustment calculation. The patentee must also include the information required by 37 CFR 1.705(b)(2) and the fee required by 37 CFR 1.18(e). If patentee does not file a timely request for reconsideration of this patent term adjustment calculation including the information required by 37 CFR 1.705(b)(2) and the fee required by 37 CFR 1.18(e), the USPTO will issue a certificate of correction reflecting the PTA determination noted above.

Patentee should be aware that in order to preserve the right to review in the United States District Court for the District of Columbia of the USPTO patent term adjustment determination, patentee must ensure that he or she also take the steps required under 35 U.S.C. 154(b)(4)(A) in a timely manner. Nothing in the request for recalculation should be construed as providing an alternative time frame for commencing a civil action under 35 U.S.C. 154(b)(4)(A).

Any questions concerning this decision should be directed to the Office of Patent Legal Administration at 571-272-7702.

UNITED STATES PATENT AND TRADEMARK OFFICE

Commissioner for Patents
United States Patent and Trademark Office
P.O. Box 1450
Alexandria, VA 22313-1450
www.uspto.gov

TROP PRUNER & HU, PC
8554 KATY FREEWAY
SUITE 100
HOUSTON, TX 77024

COPY MAILED

MAR 2 5 2005

OFFICE OF PETITIONS

In re Patent No. 6,795,338 :
Issue Date: September 21, 2004 :
Application No. 10/319,769 : ON PETITION
Filed: December 13, 2002 :
Attorney Docket No. ITO.0542US (P15142) :

This is a decision on the petition filed November 15, 2004, which is being treated as a petition under 37 CFR 3.81(b)[1] to accept the correction of the assignee on the front page of the above-identified patent.

The petition is **dismissed**.

Petitioner requests issuance of a certificate of correction in the name of "OVONYX, INC., Boise, Idaho." 37 CFR 3.81(a) permits the patent to issue to the assignee, provided that, at the time the issue fee is paid, the name of an assignee is provided. 37 CFR 3.81(b) permits the patent to issue in the name of an assignee if the assignment was submitted after payment of the issue fee but ***prior to issuance of a patent***. U.S. Patent and Trademark Office assignment records disclose that an assignment from inventors Parkinson and Lowrey to Ovonyx, Inc. was recorded on September 30, 2004, after the date of issuance of this patent. Accordingly, since the assignment was not submitted for recordation until after issuance of this patent, issuance of a certificate of correction would not be proper. Note also MPEP Section 307.

Further correspondence with respect to this matter should be addressed as follows:

By mail: Mail Stop PETITION
Commissioner for Patents
Post Office Box 1450
Alexandria, VA 22313-1450

By hand: Customer Service Window
Randolph Building

[1] *See* Official Gazette of June 22, 2004

401 Dulany Street
Alexandria, VA 22314

By fax: (703) 872-9306
ATTN: Office of Petitions

Telephone inquiries should be directed to Wan Laymon at (571) 272-3220.

Wan Laymon
Petitions Examiner
Office of Petitions
Office of the Deputy Commissioner
for Patent Examination Policy

UNITED STATES PATENT AND TRADEMARK OFFICE

Commissioner for Patents
United States Patent and Trademark Office
P.O. Box 1450
Alexandria, VA 22313-1450
www.uspto.gov

KLARQUIST SPARKMAN LLP
121 S.W. SALMON STREET
SUITE 1600
PORTLAND OR 97204

COPY MAILED

JUN 21 2006

OFFICE OF PETITIONS

In re Application of :
Ramanathan Venkatapathy :
Application No. 10/319,776 : ON PETITION
Filed: December 12, 2002 :
Attorney Docket No.: **3382-65070** :

This is a decision on the petition filed April 17, 2006 under 37 CFR 1.137(b),[1] to revive the above-identified application.

The petition is **GRANTED**.

This application became abandoned for failure to timely reply to the non-Final Office Action mailed October 11, 2005. A shortened statutory period of three months was set for replying to the non-Final Office Action. No extensions of time having been requested, this application became abandoned January 12, 2006. The instant petition and this decision precede the mailing of the Notice of Abandonment.

This matter is being referred to Technology Center 2193 for appropriate action on the amendment filed April 17, 2006.

Telephone inquiries concerning this matter should be directed to the undersigned Petitions Attorney at (571) 272-3212.

Patricia Faison-Ball
Senior Petitions Attorney
Office of Petitions

---

[1]Effective December 1, 1997, the provisions of 37 CFR 1.137(b) now provide that where the delay in reply was unintentional, a petition may be filed to revive an abandoned application or a lapsed patent pursuant to 37 CFR 1.137(b). A grantable petition filed under the provisions of 37 CFR 1.137(b) must be accompanied by:

(1) the required reply, unless previously filed. In a nonprovisional application abandoned for failure to prosecute, the required reply may be met by the filing of a continuing application. In a nonprovisional application filed on or after June 8, 1995, and abandoned for failure to prosecute, the required reply may also be met by the filing of a request for continued examination in compliance with § 1.114. In an application or patent, abandoned or lapsed for failure to pay the issue fee or any portion thereof, the required reply must be the payment of the issue fee or any outstanding balance thereof. In an application abandoned for failure to pay the publication fee, the required reply must include payment of the publication fee.

(2) the petition fee as set forth in 37 CFR 1.17(m);

(3) a statement that the entire delay in filing the required reply from the due date for the reply until the filing of a grantable petition pursuant to 37 CFR 1.137(b) was unintentional. The Commissioner may required additional information where there is a question whether the delay was unintentional; and

(4) any terminal disclaimer (and fee as set forth in 37 CFR 1.20(d)) required pursuant to 37 CFR 1.137(c)).

UNITED STATES PATENT AND TRADEMARK OFFICE

Commissioner for Patents
United States Patent and Trademark Office
P.O. Box 1450
Alexandria, VA 22313-1450
www.uspto.gov

FINNEGAN, HENDERSON, FARABOW, GARRETT
& DUNNER LLP
901 NEW YORK AVENUE, NW
WASHINGTON DC 20001-4413

COPY MAILED

FEB 05 2007

OFFICE OF PETITIONS

In re Application of :
Joseph A. Sorge et al :
Application No. 10/319,778 : ON PETITION
Filed: December 13, 2002 :
Attorney Docket No. 4121.0003-03000 :

This is a decision on the petition, filed February 2, 2007, under 37 CFR 1.313(c)(2) to withdraw the above-identified application from issue after payment of the issue fee.

The petition is **GRANTED**.

The above-identified application is withdrawn from issue for consideration of a submission under 37 CFR 1.114 (request for continued examination). See 37 CFR 1.313(c)(2).

Petitioner is advised that the issue fee paid on November 27, 2006 in the above-identified application cannot be refunded. If, however, the above-identified application is again allowed, petitioner may request that it be applied towards the issue fee required by the new Notice of Allowance.[1]

Telephone inquiries should be directed to the undersigned at (571) 272-3208.

The examiner of Technology Center AU 1637 will consider the request for continued examination under 37 CFR 1.114.

Karen Creasy

Karen Creasy
Petitions Examiner
Office of Petitions

[1] The request to apply the issue fee to the new Notice may be satisfied by completing and returning the new Issue Fee Transmittal Form PTOL-85(b), which includes the following language thereon: "Commissioner for Patents is requested to apply the Issue Fee and Publication Fee (if any) or re-apply any previously paid issue fee to the application identified above." Petitioner is advised that, whether a fee is indicated as being due or not, the Issue Fee Transmittal Form **must** be completed and timely submitted to avoid abandonment. Note the language in bold text on the first page of the Notice of Allowance and Fee(s) Due (PTOL-85).

SPE RESPONSE FOR CERTIFICATE OF CORRECTION

Paper No.: 031506

DATE : 10/26/05

TO SPE OF : ART UNIT 3671

SUBJECT : Request for Certificate of Correction on Patent No.: 10319787

A response is requested with respect to the accompanying request for a certificate of correction.

Please complete this form and return with file, within **7** days to:
Palm location **7580, Certificates of Correction Branch – South Tower – 9A22**
If response is for an IFW, **return to employee (named below) via PUBSCofC Team in MADRAS.**
With respect to the change(s) requested, correcting Office and/or Applicant's errors, should the patent read as shown in the certificate of correction (COCIN)? No new matter should be introduced, nor should the scope or meaning of the claims be changed. ↑YES

Valerie Jackson

Thank You For Your Assistance

Certificates of Correction Branch
Tel. No. 703-308-9390 ext. 114

The request for issuing the above-identified correction(s) is hereby:
Note your decision on the appropriate box.

☑ **Approved**	All changes apply.
☐ **Approved in Part**	Specify below which changes **do not** apply.
☐ **Denied**	State the reasons for denial below.

Comments:

Thomas B. Will
Supervisory Patent Examiner
Group 3600

SPE

3671
Art Unit

PTO/SB/44 (07-03)
Approved for use through 01/31/2004. OMB 0651-0033
U.S. Patent and Trademark Office; U.S. DEPARTMENT OF CO MMERCE
Under the Paperwork Reduction Act of 1995, no persons are required to respond to a collection of information unless it displays a valid OMB control number.
(Also Form PTO-1050)

UNITED STATES PATENT AND TRADEMARK OFFICE
CERTIFICATE OF CORRECTION

PATENT NO.: 6,857,208 B2
DATED : February 22, 2005
INVENTOR(S) : SMITA GANDHI, ET AL.

It is certified that error appears in the above-identified patent and that said Letters Patent is hereby corrected as shown below:

Delete Figs. 1-3, and replace with the attached Figs. 1-3.

MAILING ADDRESS OF SENDER:
Caterpillar Inc.
100 NE Adams St.
Peoria, IL 61629-6490

PATENT NO. 6,857,208

No. of additional copies

This collection of information is required by 37 CFR 1.322, and 1.324. The information is required to obtain or retain a benefit by the public which is to file (and by the USPTO to process) an application. Confidentiality is governed by 35 U.S.C. 122 and 37 CFR 1.14. This collection is estimated to take 1.0 hour to complete, including gathering, preparing, and submitting the completed application form to the USPTO. Time will vary depending upon the individual case. Any comments on the amount of time you require to complete this form and/or suggestions for reducing this burden, should be sent to the Chief Information Officer, U.S. Patent and Trademark Office, U.S. Department of Commerce, P.O. Box 1450, Alexandria, VA 22313-1450. DO NOT SEND FEES OR COMPLETED FORMS TO THIS ADDRESS. SEND TO: Attention Certificate of Corrections Branch, Commissioner for Patents, P.O. Box 1450, Alexandria, VA 22313-1450.

MAR 2 3 2005

UNITED STATES PATENT and TRADEMARK OFFICE

COMMISSIONER FOR PATENTS
UNITED STATES PATENT AND TRADEMARK OFFICE
P.O. BOX 1450
ALEXANDRIA, VA 23313-1450
WWW.USPTO.GOV

Mailed: 11/23/04

JJS
Paper No.

In re Application of Pinchuk et al
Serial No.: 10/319802
Filed: December 13, 2002

DECISION ON PETITION UNDER *37 CFR 1.48(a)*

Title: DRUG DELIVERY COMPOSITION AND MEDICAL DEVICES CONTAINING BLOCK COPOLYMER

This is a decision on the PETITION TO CORRECT INVENTORSHIP IN A NON-PROVISIONAL PATENT APPLICATION filed July 19, 2004 to correct inventorship under 37 CFR 1.48(a) by adding the name of Ni Ding to the list of inventors of the instant application.

It is noted that the applicant has met the requirements of 37 C.F.R. § 1.48(a) by (1) submitting a request to correct the inventorship that sets forth the desired inventorship change; (2) providing a statement from each person being added as an inventor that the error in inventorship occurred without deceptive intention on his or her part; (3) providing a declaration of the actual inventors as required by 37 C.F.R. § 1.63; (4) providing the processing fee set forth in 1.17(i); and, (5) providing the written consent of the assignee.

The request is **GRANTED**.

The application file is being forwarded to the appropriate section of the Patent and Trademark Office for correction of the record.

James J. Seidleck
Supervisory Patent Examiner
Art Unit 1711
Technology Center 1700

MAYER, FORTKORT & WILLIAMS, PC
251 NORTH AVENUE WEST
2ND FLOOR
WESTFIELD NJ 07090

UNITED STATES PATENT AND TRADEMARK OFFICE

COMMISSIONER FOR PATENTS
UNITED STATES PATENT AND TRADEMARK OFFICE
P.O. BOX 1450
ALEXANDRIA, VA 22313-1450
www.uspto.gov

Paper No. 7

CROWELL & MORING LLP
INTELLECTUAL PROPERTY GROUP
P.O. BOX 14300
WASHINGTON DC 20044-4300

COPY MAILED

FEB 25 2004

OFFICE OF PETITIONS

ON PETITION

In re Application of
Sander, et al.
Application No. 10/319,811
Filed: December 16, 2002
Attorney Docket No. 028987.51643US
For: SHIFTING ARRANGEMENT FOR A MANUAL SHIFT LEVER AND METHOD OF MAKING AND USING SAME

BEST AVAILABLE COPY

This is a decision on the petition under 37 CFR 1.137(b), filed February 11, 2004, to revive the above-identified application. The petition will be treated under 37 CFR 1.181 as a petition to withdraw the holding of abandonment of the above-identified application.

The petition under 37 CFR 1.181 is **GRANTED**.

The petition under 37 CFR 1.137(b) is **DISMISSED AS MOOT**.

This application was held abandoned for failure to respond in a timely manner to the Notice to File Missing Parts of Nonprovisional Application (Notice), mailed on January 30, 2003, that required submission of the basic filing fee, an executed declaration, and surcharge for their late filing within two (2) months of the mail date of the Notice. The Office contended that a reply was not timely received by the Office and deemed this application abandoned on March 31, 2003. A Notice of Abandonment was mailed on February 6, 2004.

Petitioner asserts that a proper response was in fact timely received in the Office on March 18, 2003. In support, petitioner submitted a copy of his itemized, return receipt postcard dated stamped "Mar 28 2003" by the Office and a copy of the correspondence listed on the postcard -- 1. Copy of Notice to File Missing Parts of Application; 2. Executed Declaration and Power of Attorney; 3.Executed Assignment; 4. Information Disclosure Statement including PTO-1449; 5. Check No. 244904 in the amount of $880.00; and 6. Check No. 244902 in the amount of $40.00.

The return postcard constitutes *prima facie* evidence that the items listed thereon were filed on March 18, 2003. MPEP 503.

A review of the copy of the Submission of Missing Parts of Application reveals that applicants listed an incorrect application number in the header. Applicants typed: "Application Number: 10/319,011" (Emphasis added). The copy of the IDS and the postcard receipt cite the same incorrect application number.

Even though petitioners cited the wrong application number, under MPEP 502, "A minor error in the identification of the application can be corrected by the group provided the correct identification can be quickly discovered. Examples of minor errors are transposed numbers, typographical errors, and listing the parent application number." The undersigned believes that a relatively simple review of Office records would have yielded the correct application number to enable the Office to match the March 18, 2003 correspondence with this application file. A cross-referencing of any of the accurate identifiers found on the transmittal with Office database records would have revealed the typographical error.

Therefore, the response to the January 30, 2003 Notice was timely filed. Accordingly, the petition is **GRANTED**, the Notice of Abandonment is hereby vacated, and the holding of abandonment withdrawn.

Regarding finances, the $1,330.00 petition fee submitted with the petition under 37 CFR 1.137(b) will be credited to deposit account no. 05-1323 and all monies submitted on March 18, 2003 in response to the January 30, 2003 Notice have been transferred to financial records for this application.

The application file will be forwarded to the Office of Initial Patent Examination for further processing.

Telephone inquiries pertaining to this matter may be directed to the undersigned at (703) 308-6712.

E. Shirene Willis

E. Shirene Willis
Senior Petitions Attorney
Office of Petitions
Office of the Deputy Commissioner
for Patent Examination Policy

BEST AVAILABLE COPY

UNITED STATES PATENT AND TRADEMARK OFFICE

Commissioner for Patents
United States Patent and Trademark Office
P.O. Box 1450
Alexandria, VA 22313-1450
www.uspto.gov

BAKER & HOSTETLER LLP
Washington Square
Suite 1100
1050 Connecticut Avenue, N.W.
Washington, DC 20036

COPY MAILED

OCT 16 2006

OFFICE OF PETITIONS

In re Application of	:	
Wright et al.	:	
Application No. 10/319,814	:	ON PETITION
Filing Date: 12/16/2002	:	
Attorney Docket Number:	:	
87288.3120	:	

This is a decision on the Petition for Revival of an Application for Patent Abandoned Unintentionally Under 37 C.F.R. § 1.137(b), filed July 20, 2006.

This Petition is hereby **granted**.

The above-identified application became abandoned for failure to timely and properly reply to the Notice of Allowance and Issue Fee Due, mailed February 23, 2006. The Notice set a non-extendable three (3) month period for reply. No reply having been received, the application became abandoned on April 24, 2006. A Notice of Abandonment was mailed July 14, 2006.

Applicant has submitted the issue and publication fees with the instant petition. Accordingly, the petition is granted.

This application is being referred to Publishing Division for processing into a patent.

Telephone inquiries concerning this decision should be directed to the undersigned at (571) 272-3232.

Derek L. Woods
Attorney
Office of Petitions

UNITED STATES PATENT AND TRADEMARK OFFICE

COMMISSIONER FOR PATENTS
UNITED STATES PATENT AND TRADEMARK OFFICE
P.O. BOX 1450
ALEXANDRIA, VA 22313-1450
www.uspto.gov

Paper No. 10

Crowell & Moring, LLP
Intellectual Property Group
P. O. Box 14300
Washington, DC 20044-4300

COPY MAILED

NOV 1 5 2004

OFFICE OF PETITIONS

In re Application of	:	
Xiadong Li, et al.	:	
Application No. 10/319,821	:	DECISION GRANTING
Filed: December 16, 2002	:	PETITION
Attorney Docket No. 100337/54270US	:	

This is a decision on the petitions under 37 CFR 1.53(e) and 37 CFR 1.47(a) filed December 22, 2003[1], requesting that the above-identified application be accorded a filing date of December 16, 2002 and that the application be accepted without the signature of the nonsigning inventor, respectively.

This is also a decision on the petitions under 37 CFR 1.137(a) and (b), filed of even date.

The petitions under 37 CFR 1.53(e) and 37 CFR 1.47(a) are **GRANTED**.

The petitions under 37 CFR 1.137(a) and (b) are **DISMISSED AS MOOT**.

Petition under 37 CFR 1.53(e):

The application was filed on December 16, 2002. However, the Office of Initial Patent Examination mailed a "Notice of Incomplete Nonprovisional Application" ("Notice") on February 27, 2003 stating that the application was deposited without drawings, the basic filing fee and oath or declaration were missing, and that the application failed to comply with the requirements of 37 CFR 1.821 – 1.825.

Petitioner has a copy of a postcard receipt acknowledging receipt of 37 pages of specification and 2 sheets of formal drawings on December 16, 2002. Furthermore, it is noted that the application

[1] The original petitions were received on August 5, 2003 as evidenced by the post card receipt submitted with the instant petition.

contains at least one method claim; thus, the application was entitled to a filing date. MPEP 601.01(f) states in pertinent part:

> "It has been USPTO practice to treat an application that contains at least one process or method claim as an application for which a drawing is not necessary for an understanding of the invention under 35 U.S.C. 113 (first sentence)."

In view of the above, the Notice was mailed in error since the application was deposited with drawings and the application contained at least one method claim. Accordingly, the application was clearly entitled to a filing date.

Petitions under 37 CFR 1.137(a) and (b):

An application cannot be regarded as abandoned if the application was not granted a filing date. Nevertheless, the application should have been given a filing date and the Notice should not have been mailed. Since the application was not, in fact, abandoned, the petitions to revive are dismissed as involving a moot issue. The unavoidable and unintentional petition fees have not been charged to petitioner's deposit account as authorized.

Petition under 37 CFR 1.47(a):

Petitioner has shown that the non-signing inventor has refused to join in the filing of the above-identified application.

The above-identified application and papers have been reviewed and found in compliance with 37 CFR 1.47(a). This application is hereby accorded Rule 1.47(a) status.

As provided in 37 CFR 1.47(a), this Office will forward notice of this application's filing to the non-signing inventor at the address given in the petition. Notice of the filing of this application will also be published in the Official Gazette.

Fees:

Petitioner states that "3 checks totaling $855.00 to cover filing fees" were enclosed with the instant petition. A search of USPTO records does not show receipt of the aforementioned checks. While petitioner has provided copies of the aforementioned checks, there is no indication in USPTO records that the checks were cashed. Therefore, the filing fee of $375, the $65 surcharge fee for the late filing fee and oath or declaration fee; the $40 recordation fee; $440 additional claims fee; and the 1.47(a) petition fee of $130 will be charged to petitioner's deposit account. If petitioner has evidence that the checks were cashed (i.e., canceled checks), petitioner may request a refund of any duplicate fees charged. Copies of petitioner's evidence should accompany such a request, along with a copy of this decision.

This application file is being forwarded to the Office of Initial Patent Examination Division for further **processing with a filing date of December 16, 2002, with an indication on the filing receipt that 2 sheets of drawings were present on filing, and using the 2 sheets of drawings supplied with the instant petition.** Thereafter, the application file will be forwarded to Technology Center 1600 for examination in due course.

Telephone inquiries concerning this matter may be directed the Marianne Jenkins at (703) 306-3475.

Brian Hearn

Brian Hearn
Senior Petitions Examiner
Office of Petitions
Office of the Deputy Commissioner
For Patent Examination Policy

UNITED STATES PATENT AND TRADEMARK OFFICE

Commissioner for Patents
United States Patent and Trademark Office
P.O. Box 1450
Alexandria, VA 22313-1450
www.uspto.gov

FISH & RICHARDSON P.C.
PO BOX 1022
MINNEAPOLIS MN 55440-1022

COPY MAILED

SEP 27 2005

OFFICE OF PETITIONS

In re Application of	:	
Naicker et al.	:	
Application No. 10/319,835	:	DECISION GRANTING PETITION
Filed: December 16, 2002	:	UNDER 37 CFR 1.78(a)(3) AND
Attorney Docket No. 16593-002005/1124	:	UNDER 37 CFR 1.78(a)(6)

This is a decision on the petition under 37 CFR §§ 1.78(a)(3) and 1.78(a)(6), filed April 29, 2005, to accept an unintentionally delayed claim under 35 U.S.C. §§120, 365(c) and 119(e) for the benefit of the prior-filed applications set forth in the concurrently filed amendment.

The petitions are **GRANTED**.

A petition for acceptance of a claim for late priority under 37 CFR §§ 1.78(a)(3) and 1.78(a)(6) is only applicable to those applications filed on or after November 29, 2000. Further, the petition is appropriate only after the expiration of the period specified in 37 CFR §§ 1.78(a)(2)(ii) and 1.78(a)(5)(ii). In addition, the petition under 37 CFR §§ 1.78(a)(3) and 1.78(a)(6) must be accompanied by:

(1) the reference required by 35 U.S.C. §§ 120 and 119(e) and 37 CFR §§ 1.78(a)(2)(i) and 1.78(a)(5)(i) of the prior-filed application, unless previously submitted;
(2) the surcharge set forth in § 1.17(t); and
(3) a statement that the entire delay between the date the claim was due under 37 CFR §§ 1.78(a)(2)(ii) and 1.78(a)(5)(ii) and the date the claim was filed was unintentional. The Commissioner may require additional where there is a question whether the delay was unintentional.

The instant application was filed on December 16, 2002, and was pending at the time of filing of the instant petition. A reference to the prior-filed applications has been included in an amendment to the first sentence of the specification following the title, as required by 37 CFR §§ 1.78(a)(2)(iii) and 1.78(a)(5)(iii). Additionally, the intermediate PCT application was filed within twelve months of provisional Application No. 60/061,360, which was filed on October 8, 1997, for which priority is claimed.

The instant nonprovisional application was filed after November 29, 2000, and the claim for priority herein is submitted after expiration of the period specified in 37 CFR §§ 1.78(a)(2)(ii) and 1.78(a)(5)(ii). *See* 35 U.S.C. §§ 120 and 365(c) and § 119(e). Accordingly, having found that the instant petition satisfies the conditions of 37 CFR §§ 1.78(a)(3) and 1.78(a)(6) for

acceptance of an unintentionally delayed claim for priority under 35 U.S.C. §§ 120 and 365(c) and § 119(e), the petition to accept an unintentionally delayed claim of benefit to the prior-filed applications is granted.

The granting of the petition to accept the delayed benefit claim to the prior-filed applications under 37 CFR §§ 1.78(a)(3) and 1.78(a)(6) should not be construed as meaning that the instant application is entitled to the benefit of the filing date of the prior-filed applications. In order for the instant application to be entitled to the benefit of the prior-filed applications, all other requirements under 35 U.S.C. §120 and 1.78(a)(1) and (a)(2) and under 35 U.S.C. §119(e) and 37 CFR 1.78(a)(4) and (a)(5) must be met. Similarly, the fact that the corrected Filing Receipt accompanying this decision on petition includes the prior-filed applications should not be construed as meaning that applicant is entitled to the claim for benefit of priority to the prior-filed applications noted thereon. Accordingly, the examiner will, in due course, consider this benefit claim and determine whether the instant application is entitled to the benefit of the earlier filing date.

A corrected Filing Receipt, which includes the priority claim to the prior-filed applications, accompanies this decision on petition.

Any questions concerning this *decision* may be directed to the undersigned at (571) 272-3206. Any questions concerning the acceptance of benefit claims should be directed to the Examiner of record.

This matter is being referred to the Publishing Division to await a response to the Notice of Allowance mailed July 8, 2005.

Liana Chase
Petitions Examiner
Office of Petitions
Office of the Deputy Commissioner
for Patent Examination Policy

ATTACHMENT: Corrected Filing Receipt

UNITED STATES PATENT AND TRADEMARK OFFICE

Commissioner for Patents
United States Patent and Trademark Office
P.O. Box 1450
Alexandria, VA 22313-1450
www.uspto.gov

FISH & RICHARDSON PC
P O BOX 1022
MINNEAPOLIS, MN 55440-1022

COPY MAILED

DEC 0 1 2005

OFFICE OF PETITIONS

In re Application of	:	
Selvaraj Naicker et al	:	
Application No. 10/319,835	:	DECISION ON PETITION
Filed: December 16, 2002	:	UNDER 37 CFR 1.313(c)(3)
Attorney Docket No. 16593-002005	:	

This is a decision on the petition, filed November 16, 2005, under 37 CFR 1.313(c)(3) to withdraw the above-identified application from issue after payment of the issue fee.

The petition is **GRANTED**.

Petitioner requests that the above-identified application be withdrawn from issue for express abandonment in favor of a continuation application stated to have been filed on November 15, 2005. See 37 CFR 1.313(c)(3).

The application is hereby withdrawn from issue, and the abandonment is hereby recognized.

Telephone inquiries should be directed to the undersigned at (571) 272-3218.

This abandoned matter is being referred to Files Repository.

Frances Hicks
Petitions Examiner
Office of Petitions

UNITED STATES PATENT AND TRADEMARK OFFICE

Commissioner for Patents
United States Patent and Trademark Office
P.O. Box 1450
Alexandria, VA 22313-1450
www.uspto.gov

ADE & COMPANY INC.
2157 Henderson Highway
WINNIPEG MB R2G1P-9 CA CANADA

In re Application of:
Stranc, Miroslaw F., et al.
Serial No. 10/319838
Filed: December 16, 2002
Docket: 83815-632
Title: METHOD OF ASSESSING TISSUE VIABILITY USING NEAR-INFRARED SPECTROSCOPY

DECISION ON PETITION
UNDER 37 CFR § 1.181

This is a decision on the petition filed on March 29, 2007. Petitioner requests the withdrawal of the Final Office Action mailed January 29, 2007 as premature under 37 CFR §1.181.

The petition is dismissed.

Background

The examiner entered a final rejection on January 29, 2007, applying both obvious-type double patenting and 35 U.S.C. § 103(a) rejections. On March 29, 2007 the present petition was filed requesting a withdrawal of a premature final rejection under 37 CFR §1.181. On April 30, 2007 the applicants filed an Amendment After Final Rejection supporting claims 22-37 and contesting the examiner's nonstatutory double patenting and 35 U.S.C. § 103(a) rejections. The examiner filed an Advisory Action on May 31, 2007, refusing to enter the proposed amendment for it presented additional claims without canceling a corresponding number of finally rejected claims. Moreover, these claims were found to require further search and consideration. The examiner also noted that the request for reconsideration did not place the application in condition for allowance, finding the applicants' arguments regarding the double patenting and 35 U.S.C. § 103(a) rejections to be unpersuasive. On June 29, 2007 the applicants filed another Amendment and a Request for Continuing Examination with the corresponding fees.

Discussion

A review of the application reveals that an Amendment After the Final Action was filed on April 30, 2007. On May 31, 2007 the examiner filed an Advisory Action, in which the proposed amendments were not entered based on the need for further search and consideration. Additionally, the examiner noted that the request for reconsideration failed to place the application in condition for allowance.

With respect to the amendment of finally rejected claims, MPEP 714.13 states:

> It should be kept in mind that applicant cannot, as a matter of right, amend any finally rejected claims, add new claims after a final rejection (see 37 CFR 1.116) or reinstate previously canceled claims.

> The reasons for nonentry should be concisely expressed. For example:
>
> The claims, if amended as proposed, would not avoid any of the rejections set forth in the last Office action, and thus the amendment would not place the case in condition for allowance or in better condition for appeal.
>
> If the proposed amendment presents new issues requiring further consideration and/or search, the examiner should provide an explanation as to the reasons why the proposed amendment raises new issues that would require further consideration and/or search.

In accordance with the findings of the May 31, 2007 Advisory Action, the applicant filed a Request for Continuing Examination on June 29, 2007.

With respect to a Request for Continuing Examination, 37 CFR § 1.114(d) states:

> If an applicant timely files a submission and fee set forth in § 1.17(e), the Office will withdraw the finality of any Office action and the submission will be entered and considered.

With respect to when a final rejection is proper on a first office action, MPEP 706.07(b) states:

> ...it would not be proper to make final a first Office action in a continuing or substitute application where that application contains material which was presented in the earlier application after final rejection or closing of prosecution but was denied entry because (A) new issues were raised that required further consideration and/or search, or (B) the issue of new matter was raised.

A review of the record reveals that the applicants did in fact timely file a submission and fee as set forth in §1.17(e). Therefore, the Office entered the Request for Continued Examination. The claims the applicants want examined were examined and a non-final Office action was mailed July 16, 2007.

Decision

As a non-final Office action was mailed on July 16, 2007, the petitioners' request for relief is moot. Therefore, the petition to withdraw the finality of the January 29, 2007 Office Action is dismissed as moot.

PETITION DISMISSED.

It is noted that petitioner included a fee of $400.00 as per 37 CFR § 1.17 for a petition under 37 CFR § 1.182 though seeking relief under 37 CFR § 1.181. The petition was treated under 37 CFR § 1.181 which does not require a fee. Petitioner may request a refund in accordance with 37 CFR § 1.26. See MPEP 607.02. Any inquiry regarding this decision should be directed to Allan N. Shoap, Special Programs Examiner, at (571) 272-4514.

for Frederick R. Schmidt, Director
Technology Center 3700

UNITED STATES PATENT AND TRADEMARK OFFICE

Commissioner for Patents
United States Patent and Trademark Office
P.O. Box 1450
Alexandria, VA 22313-1450
www.uspto.gov

ADE & COMPANY INC.
2157 HENDERSON HIGHWAY
WINNIPEG MB R2G1P-9
CANADA

COPY MAILED

JUL 11 2008

In re Application of	:
Stranc et al.	:
Application No. 10/319,838	: DECISION ON PETITIONS
Filed: December 16, 2002	: UNDER 37 CFR 1.78(a)(3)
Attorney Docket No. 83815-632	: AND UNDER 37 CFR 1.55(C)

This is a decision on the petitions under 37 CFR §§ 1.78(a)(3) and 1.78(a)(6), filed January 22, 2008, to accept an unintentionally delayed claim under 35 U.S.C. §§120, 365(c) and 119(e) for the benefit of the prior-filed applications set forth in the amendment filed January 2, 2004.

The petitions are **GRANTED**.

A petition for acceptance of a claim for late priority under 37 CFR §§ 1.78(a)(3) and 1.78(a)(6) is only applicable to those applications filed on or after November 29, 2000. Further, the petition is appropriate only after the expiration of the period specified in 37 CFR §§ 1.78(a)(2)(ii) and 1.78(a)(5)(ii). In addition, the petition under 37 CFR §§ 1.78(a)(3) and 1.78(a)(6) must be accompanied by:

(1) the reference required by 35 U.S.C. §§ 120 and 119(e) and 37 CFR §§ 1.78(a)(2)(i) and 1.78(a)(5)(i) of the prior-filed application, unless previously submitted;
(2) the surcharge set forth in § 1.17(t); and
(3) a statement that the entire delay between the date the claim was due under 37 CFR §§ 1.78(a)(2)(ii) and 1.78(a)(5)(ii) and the date the claim was filed was unintentional. The Commissioner may require additional where there is a question whether the delay was unintentional.

The instant nonprovisional application was filed after November 29, 2000, and the claim for priority herein is submitted after expiration of the period specified in 37 CFR §§ 1.78(a)(2)(ii) and 1.78(a)(5)(ii). *See* 35 U.S.C. §§ 120 and 365(c) and § 119(e). Accordingly, having found that the instant petition satisfies the conditions of 37 CFR §§ 1.78(a)(3) and 1.78(a)(6) for acceptance of an unintentionally delayed claim for priority under 35 U.S.C. §§ 120 and 365(c) and § 119(e), the petition to accept an unintentionally delayed claim of benefit to the prior-filed applications is granted.

The granting of the petition to accept the delayed benefit claim to the prior-filed applications under 37 CFR §§ 1.78(a)(3) and 1.78(a)(6) should not be construed as meaning that the instant application is entitled to the benefit of the filing date of the prior-filed applications. In order for the instant application to be entitled to the benefit of the prior-filed applications, all other requirements under 35 U.S.C. §120 and 1.78(a)(1) and (a)(2) and under 35 U.S.C.

§119(e) and 37 CFR 1.78(a)(4) and (a)(5) must be met. Similarly, the fact that the corrected Filing Receipt accompanying this decision on petition includes the prior-filed applications should not be construed as meaning that applicant is entitled to the claim for benefit of priority to the prior-filed applications noted thereon. Accordingly, the examiner will, in due course, consider this benefit claim and determine whether the instant application is entitled to the benefit of the earlier filing date.

A corrected Filing Receipt, which includes the priority claim to the prior-filed applications, accompanies this decision on petition.

Any questions concerning this matter may be directed to the undersigned at (571) 272-3206.

This matter is being referred to Technology Center Art Unit 3737 for appropriate action on the amendment submitted January 2, 2004, including consideration by the examiner of the claim under 35 U.S.C. § §120 and 365(c) and 37 CFR 1.78(a)(2) for the benefit of the prior-filed applications, and for consideration of the claim under 35 U.S.C. §119(e) and 37 CFR 1.78(a)(5) for the benefit of the prior-filed provisional application.

Liana Walsh
Petitions Examiner
Office of Petitions

ATTACHMENT: Corrected Filing Receipt

UNITED STATES PATENT AND TRADEMARK OFFICE

UNITED STATES DEPARTMENT OF COMMERCE
United States Patent and Trademark Office
Address: COMMISSIONER FOR PATENTS
P.O. Box 1450
Alexandria, Virginia 22313-1450
www.uspto.gov

APPLICATION NUMBER	FILING or 371(c) DATE	GRP ART UNIT	FIL FEE REC'D	ATTY.DOCKET.NO	TOT CLAIMS	IND CLAIMS
10/319,838	12/16/2002	3737	2048	83815-632	21	1

CONFIRMATION NO. 8844

CORRECTED FILING RECEIPT

23529
ADE & COMPANY INC.
2157 Henderson Highway
WINNIPEG, MB R2G1P9
CANADA

Date Mailed: 07/09/2008

Receipt is acknowledged of this non-provisional patent application. The application will be taken up for examination in due course. Applicant will be notified as to the results of the examination. Any correspondence concerning the application must include the following identification information: the U.S. APPLICATION NUMBER, FILING DATE, NAME OF APPLICANT, and TITLE OF INVENTION. Fees transmitted by check or draft are subject to collection. Please verify the accuracy of the data presented on this receipt. **If an error is noted on this Filing Receipt, please submit a written request for a Filing Receipt Correction. Please provide a copy of this Filing Receipt with the changes noted thereon. If you received a "Notice to File Missing Parts" for this application, please submit any corrections to this Filing Receipt with your reply to the Notice. When the USPTO processes the reply to the Notice, the USPTO will generate another Filing Receipt incorporating the requested corrections**

Applicant(s)

Miroslaw F. Stranc, Manitoba, CANADA;
Michael G. Sowa, Manitoba, JAPAN;
Henry H. Mantsch, Manitoba, JAPAN;

Power of Attorney: The patent practitioners associated with Customer Number 23529

Domestic Priority data as claimed by applicant

This application is a DIV of 09/402,348 02/17/2000 PAT 6,587,701
which is a 371 of PCT/CA98/00292 04/02/1998
which claims benefit of 60/043,398 04/03/1997

Foreign Applications

If Required, Foreign Filing License Granted: 03/28/2003

The country code and number of your priority application, to be used for filing abroad under the Paris Convention, is **US 10/319,838**

Projected Publication Date: Not Applicable

Non-Publication Request: No

Early Publication Request: No

Title

Method of assessing tissue viability using near-infrared spectroscopy

Preliminary Class

600

PROTECTING YOUR INVENTION OUTSIDE THE UNITED STATES

Since the rights granted by a U.S. patent extend only throughout the territory of the United States and have no effect in a foreign country, an inventor who wishes patent protection in another country must apply for a patent in a specific country or in regional patent offices. Applicants may wish to consider the filing of an international application under the Patent Cooperation Treaty (PCT). An international (PCT) application generally has the same effect as a regular national patent application in each PCT-member country. The PCT process **simplifies** the filing of patent applications on the same invention in member countries, but **does not result** in a grant of "an international patent" and does not eliminate the need of applicants to file additional documents and fees in countries where patent protection is desired.

Almost every country has its own patent law, and a person desiring a patent in a particular country must make an application for patent in that country in accordance with its particular laws. Since the laws of many countries differ in various respects from the patent law of the United States, applicants are advised to seek guidance from specific foreign countries to ensure that patent rights are not lost prematurely.

Applicants also are advised that in the case of inventions made in the United States, the Director of the USPTO must issue a license before applicants can apply for a patent in a foreign country. The filing of a U.S. patent application serves as a request for a foreign filing license. The application's filing receipt contains further information and guidance as to the status of applicant's license for foreign filing.

Applicants may wish to consult the USPTO booklet, "General Information Concerning Patents" (specifically, the section entitled "Treaties and Foreign Patents") for more information on timeframes and deadlines for filing foreign patent applications. The guide is available either by contacting the USPTO Contact Center at 800-786-9199, or it can be viewed on the USPTO website at http://www.uspto.gov/web/offices/pac/doc/general/index.html.

For information on preventing theft of your intellectual property (patents, trademarks and copyrights), you may wish to consult the U.S. Government website, http://www.stopfakes.gov. Part of a Department of Commerce initiative, this website includes self-help "toolkits" giving innovators guidance on how to protect intellectual property in specific countries such as China, Korea and Mexico. For questions regarding patent enforcement issues, applicants may call the U.S. Government hotline at 1-866-999-HALT (1-866-999-4158).

LICENSE FOR FOREIGN FILING UNDER

Title 35, United States Code, Section 184

Title 37, Code of Federal Regulations, 5.11 & 5.15

GRANTED

The applicant has been granted a license under 35 U.S.C. 184, if the phrase "IF REQUIRED, FOREIGN FILING LICENSE GRANTED" followed by a date appears on this form. Such licenses are issued in all applications where the conditions for issuance of a license have been met, regardless of whether or not a license may be required as

set forth in 37 CFR 5.15. The scope and limitations of this license are set forth in 37 CFR 5.15(a) unless an earlier license has been issued under 37 CFR 5.15(b). The license is subject to revocation upon written notification. The date indicated is the effective date of the license, unless an earlier license of similar scope has been granted under 37 CFR 5.13 or 5.14.

This license is to be retained by the licensee and may be used at any time on or after the effective date thereof unless it is revoked. This license is automatically transferred to any related applications(s) filed under 37 CFR 1.53(d). This license is not retroactive.

The grant of a license does not in any way lessen the responsibility of a licensee for the security of the subject matter as imposed by any Government contract or the provisions of existing laws relating to espionage and the national security or the export of technical data. Licensees should apprise themselves of current regulations especially with respect to certain countries, of other agencies, particularly the Office of Defense Trade Controls, Department of State (with respect to Arms, Munitions and Implements of War (22 CFR 121-128)); the Bureau of Industry and Security, Department of Commerce (15 CFR parts 730-774); the Office of Foreign AssetsControl, Department of Treasury (31 CFR Parts 500+) and the Department of Energy.

NOT GRANTED

No license under 35 U.S.C. 184 has been granted at this time, if the phrase "IF REQUIRED, FOREIGN FILING LICENSE GRANTED" DOES NOT appear on this form. Applicant may still petition for a license under 37 CFR 5.12, if a license is desired before the expiration of 6 months from the filing date of the application. If 6 months has lapsed from the filing date of this application and the licensee has not received any indication of a secrecy order under 35 U.S.C. 181, the licensee may foreign file the application pursuant to 37 CFR 5.15(b).

UNITED STATES PATENT AND TRADEMARK OFFICE

Commissioner for Patents
United States Patent and Trademark Office
P.O. Box 1450
Alexandria, VA 22313-1450
www.uspto.gov

COPY MAILED

NOV 2 5 2008

OFFICE OF PETITIONS

ADE & COMPANY INC.
2157 HENDERSON HIGHWAY
WINNIPEG MB R2GIP-9 CA
CANADA

In re Application of
Miroslaw F. Stranc et al
Application No. 10/319,838
Filed: December 16, 2002
Attorney Docket No. 83815-632

DECISION ON PETITION

This is a decision on the petition under the unintentional provisions of 37 CFR 1.137(b), filed September 24, 2008, to revive the above-identified application.

The petition is **GRANTED**.

The petition satisfies the conditions for revival pursuant to the provisions of 37 CFR 1.137(b) in that (1) the reply in the form of an RCE and an amendment; (2) the petition fee; and (3) the required statement of unintentional delay have been received. Accordingly, the reply to the final rejection mailed January 3, 2008, is accepted as having been unintentionally delayed.

Telephone inquiries concerning this decision should be directed to the undersigned at (571) 272-3208.

This application is being referred to Technology Center AU 3737 for appropriate action by the Examiner in the normal course of business on the reply received September 24, 2008.

Karen Creasy

Karen Creasy
Petitions Examiner
Office of Petitions

UNITED STATES PATENT AND TRADEMARK OFFICE

Commissioner for Patents
United States Patent and Trademark Office
P.O. Box 1450
Alexandria, VA 22313-1450
www.uspto.gov

JUN 13 2005

SCHWEGAN, LUNDBERG, WOESSNER & KLUTH, P.A.
EBAY
P.O. BOX 2938
MINNEAPOLIS, MN 55402-0938

In re application of :
Alan S. Fisher et al. :
Application No. 10/319,868 : **DECISION ON REQUEST**
Filed: December 13, 2002 : **FOR WITHDRAWAL OF**
For: METHOD AND SYSTEM FOR PROVIDING : **ATTORNEY**
STATUS UPDATES :

This is a decision on the request from Tarek N. Fahmi of Blakely Sokoloff Taylor & Zafman, filed on November 22, 2004 under 37 CFR 1.36 and MPEP 402.06, requesting permission to withdraw as the attorney of record in the above-identified application.

The request is **NOT APPROVED as MOOT**.

Under 37 CFR 1.36 an attorney may withdraw only upon application to and approval by the Commissioner. It should be noted that a withdrawal is effective when approved, not when filed. Besides giving due notice to his or her client and delivering to the client all papers and property to which the client is entitled as specified under 37 CFR 10.40, approval of such a request requires that the following conditions be met:

A) Each attorney of record must sign the notice of withdrawal, or the notice must contain a clear indication of one attorney signing on behalf of another, because the Office does not recognize law firms;

B) A proper reason for the withdrawal as enumerated in 37 CFR 10.40(b) or subsection (1)-(6) of 37 CFR 10.40(c) must be provided; and

C) If withdrawal is requested in accordance with 37 CFR 10.40(c) above, there must be at least 30 days between approval of the withdrawal and the later of the expiration date of a time period for reply or the expiration date of the period which can be obtained by a petition and fee for extension of time under 37 CFR 1.136(a).

The request to withdraw as attorney in this application is not approved as moot because a revocation of power of attorney to Blakely Sokoloff Taylor & Zafman and a new power of attorney to the attorneys of Schwegman, Lundberg, Woessner & Kluth, P.A. was submitted to the United States Patent and Trademark Office on May 2, 2005. The power of attorney therefore has already been withdrawn as per the Notice to that effect mailed May 6, 2005.

Steven N. Meyers
Special Programs Examiner
Patent Technology Center 3600
571-272-6611

SNM/dew: 6/07/05

cc: BLAKELY SOKOLOFF TAYLOR & ZAFMAN
12400 WILSHIRE BOULEVARD
SEVENTH FLOOR
LOS ANGELES, CA 90025-1030

UNITED STATES PATENT AND TRADEMARK OFFICE

Commissioner for Patents
United States Patent and Trademark Office
P.O. Box 1450
Alexandria, VA 22313-1450
www.uspto.gov

G.F. Gallinger
7420 Milner Drive
Colorado Springs, CO 80920

COPY MAILED

JAN 0 5 2006

OFFICE OF PETITIONS

In re Application of :
Brian A. Polvi :
Application No. 10/319,882 : DECISION ON PETITION
Filed: December 16, 2002 :
Attorney Docket No. MUSCLE_MAS :

This is decision on the petition filed on September 28, 2005, which is being treated as a petition to withdraw the holding of abandonment.

On March 4, 2005, the Office mailed a nonfinal Office action, which set a three-month shortened statutory period for response. In the apparent absence of a timely reply, the application became abandoned on June 5, 2005.

Petitioner asserts that he filed a timely response to the nonfinal Office action. In support of the petition, petitioner submits a copy of an amendment with an authorization to charge the Deposit Account for a one-month extension of time, bearing a certificate of mailing of July 5, 2005. The Office notes that the certificate of mailing on the amendment states: "The enclosed papers were addressed to the Commissioner of Patents and Trademarks, Washington, DC 20231, and deposited with the U.S. Postal Service with sufficient postage as first class mail on 7/5/05. G. F. Gallinger, #34,168."

The USPTO file is the official record of the papers filed in this application. After reviewing the official file, the Office has not located the amendment and the request for a one-month extension of time, submitted on July 5, 2005, among the application papers. A petitioner alleging that a paper was filed in the USPTO and later misplaced has the burden of proving the allegation by a preponderance of the evidence.

Pursuant to 37 CFR 1.8(a), the USPTO will consider correspondence, which is required to be filed in the Office within a set time period, as timely filed if the applicant complies with the procedures described in the following section. The actual date of receipt will be used for all other purposes.

(1) Correspondence will be considered as being timely filed if:

(i) The correspondence is mailed or transmitted prior to expiration of the set period of time by being:

(A) Addressed as set out in § 1.1(a) and deposited with the U.S. Postal Service with sufficient postage as first class mail; or

(B) Transmitted by facsimile to the Patent and Trademark Office in accordance with § 1.6(d); and

(ii) The correspondence includes a certificate for each piece of correspondence stating the date of deposit or transmission. The person signing the certificate should have reasonable basis to expect that the correspondence would be mailed or transmitted on or before the date indicated.

As previously stated, petitioner certified that the response to the nonfinal Office action was addressed to Commissioner of Patents and Trademarks, Washington, DC 20231. The Office notes that on May 1, 2003, the USPTO changed its address for certain correspondence to P.O. Box 1450, Alexandria, VA 22313-1450. *See 37 CFR 1.1 and Correspondence with the United States Patent and Trademark Office, 68 Fed. Reg. 14332 (March 25, 2003), 1269 Off. Gaz. Pat. Office 159 (Apr. 22, 2003).* To allow applicants time to become accustomed to the new address in Alexandria, VA, the USPTO waived the provisions of 37 CFR 1.8 and 1.10 such that correspondence addressed to Washington, DC 20231 would be treated as acceptable under 37 CFR 1.8 and 1.10 for otherwise compliant Certificates of Mailing and "Express Mail." *See 1292 Off. Gaz. Pat. Office 186 (March 29, 2005).*

Effective April 4, 2005, the United States Postal Service (USPS) ceased forwarding correspondence to the USPTO addressed to Washington, DC 20231, and the USPTO terminated its arrangement for the delivery to Alexandria, VA of correspondence addressed to Washington, DC 20231. *See 1292 Off. Gaz. Pat. Office 186 (March 29, 2005).* Additionally, the USPTO stated, **effective April 4, 2005**, it would no longer waive the provisions of 37 CFR 1.8 (Certificate of Mailing) and 1.10 ("Express Mail") for correspondence addressed to the USPTO, Washington, DC 20231. *See 1292 Off. Gaz. Pat. Office 186 (March 29, 2005).* The USPTO further stated that all correspondence addressed to the Washington, DC 20231 address **after April 3, 2005**, would be returned to sender marked by the USPS as undeliverable. Therefore, such mail returned to the sender by the USPS will not be considered proof of prior filing or mailing under 37 CFR 1.8(b) or 1.10(e) since the correspondence was not mailed in accordance with 37 CFR 1.1. *See 1292 Off. Gaz. Pat. Office 186 (March 29, 2005).*

In the present case, petitioner failed to comply with the procedures of 37 CFR 1.8 because petitioner did not mail the reply to the correct USPTO mailing address on July 5, 2005. Accordingly, petitioner cannot avail himself of the benefits bestowed by 37 CFR 1.8. Since petitioner failed to submit sufficient documentary evidence to demonstrate that he timely filed a response to the nonfinal Office action, the petition to withdraw the holding of abandonment is **dismissed**.

If petitioner desires, petitioner may submit a request for reconsideration of this decision within **TWO (2) MONTHS** from the mail date of this decision. Extensions of time are permitted under 37 CFR 1.136(a). With any request for reconsideration, petitioner should submit documentary evidence, such as a returned, date-stamped postcard receipt, as evidence that petitioner filed a timely response to the nonfinal Office action on July 5, 2005. The request for reconsideration should include a cover letter entitled "Renewed Petition under 37 CFR 1.181."

In the alternative, petitioner may wish to seek relief by filing a petition under 37 CFR 1.137(b) on the basis of unintentional delay, instead of submitting a request for reconsideration of the decision. A grantable petition under 37 CFR 1.137(b) must be accompanied by: (1) the reply required to the outstanding Office action or notice, **unless previously filed**; (2) the petition fee ($750.00 for a small entity), and (3) a statement that the entire delay in filing the required reply from the due date for the reply until the filing of a grantable petition was unintentional. The appropriate form for filing a "Petition For Revival of an Application for Patent Abandoned Unintentionally Under 37 CFR 1.137(b)" accompanies this decision for petitioner's convenience.

Further correspondence with respect to this matter should be addressed as follows:

By mail: Mail Stop Petition
Commissioner for Patents
P.O. Box 1450
Alexandria, VA 22313-1450

By FAX: (571) 273-8300
Attn: Office of Petitions

By hand: Customer Service Window
Randolph Building
401 Dulany Street
Alexandria, VA 22314

Telephone inquiries related to this decision should be directed to the undersigned at (571) 272-3211.

Christina Tartera Donnell

Christina Tartera Donnell
Senior Petitions Attorney
Office of Petitions

Enclosures: PTO/SB/64 and the Privacy Act Statement

UNITED STATES PATENT AND TRADEMARK OFFICE

Commissioner for Patents
United States Patent and Trademark Office
P.O. Box 1450
Alexandria, VA 22313-1450
www.uspto.gov

NXP, B.V.
NXP INTELLECTUAL PROPERTY DEPARTMENT
M/S41-SJ
1109 MCKAY DRIVE
SAN JOSE CA 95131

COPY MAILED

OCT 29 2007

OFFICE OF PETITIONS

ON PETITION

In re Application of
Adrianus Marinus Gerardus Peeters et al.
Application No. 10/319,894
Filed: December 13 2002
Attorney Docket No. DE 010345

This is a decision on the petition under 37 CFR 1.137(b), filed February 5, 2007, to revive the above-identified application.

The petition is **GRANTED**.

The application became abandoned for failure to reply in a timely manner to the non-final Office action mailed April 20, 2006, which set a shortened statutory period for reply of three (3) months. No extensions of time under the provisions of 37 CFR 1.136(a) was obtained. Accordingly, the application became abandoned on July 21, 2006.

The petition satisfies the requirements of 37 CFR 1.137(b) in that petitioner has supplied (1) the reply in the form of an amendment; (2) the petition fee of $1500; and (3) an adequate statement of unintentional delay.

Telephone inquiries concerning this decision should be directed to Terri Williams at (571) 272-2991.

The application file is being to Technology Center AU 2137 for appropriate action on the concurrently filed amendment.

Liana Walsh
Petitions Examiner
Office of Petitions

UNITED STATES PATENT AND TRADEMARK OFFICE

Commissioner for Patents
United States Patent and Trademark Office
P.O. Box 1450
Alexandria, VA 22313-1450
www.uspto.gov

NXP, B.V.
NXP INTELLECTUAL PROPERTY & LICENSING
M/S41-SJ
1109 MCKAY DRIVE
SAN JOSE CA 95131

COPY MAILED
DEC 23 2009
OFFICE OF PETITIONS

In re Application of :
Saul R. DOOLEY et al. :
Application No. 10/319,895 : DECISION ON PETITION
Filed: December 13, 2002 :
Attorney Docket No. **GB 010225** :

This is a decision on the petition under the unintentional provisions of 37 CFR 1.137(b), filed August 21, 2009, to revive the above-identified application.

The petition is **GRANTED**.

The application became abandoned for failure to reply in a timely manner to the non-final Office action mailed, July 29, 2008, which set a shortened statutory period for reply of three (3) months. No extensions of time under the provisions of 37 CFR 1.136(a) were obtained. Accordingly, the application became abandoned on October 30, 2008.

The petition satisfies the requirements of 37 CFR 1.137(b) in that petitioner has supplied (1) the reply in the form of an amendment, (2) the petition fee of $1620, and (3) a proper statement of unintentional delay. Accordingly, the reply to the non-final Office action of July 29, 2008 is accepted as having been unintentionally delayed.

It is not apparent whether the person signing the statement of unintentional delay was in a position to have firsthand or direct knowledge of the facts and circumstances of the delay at issue. Nevertheless, such statement is being treated as having been made as the result of a reasonable inquiry into the facts and circumstances of such delay. See 37 CFR 10.18(b) and Changes to Patent Practice and Procedure; Final Rule Notice, 62 Fed. Reg. 53131, 53178 (October 10, 1997), 1203 Off. Gaz. Pat. Office 63, 103 (October 21, 1997). In the event that such an inquiry has not been made, petitioner must make such an inquiry. If such inquiry results in the discovery that it is not correct that the entire delay in filing the required reply from the due

date for the reply until the filing of a grantable petition pursuant to 37 CFR 1.137(b) was unintentional, petitioner must notify the Office.

There is no indication that the person signing the petition was ever given a power of attorney to prosecute the application. If the person signing the petition desires to receive future correspondence regarding this application, the appropriate power of attorney document must be submitted. While a courtesy copy of this decision is being mailed to the person signing the petition, all future correspondence will be directed to the address currently of record until appropriate instructions are received.

Telephone inquiries concerning this decision should be directed to Tredelle Jackson at (571) 272-2783.

This application is being referred to Technology Center AU 2611 for appropriate action on the concurrently filed amendment.

Ramesh Krishnamurthy
Petitions Examiner
Office of Petitions

cc: **THOMAS H. HAM**
WILSON & HAM PMB
348 2530 BERRYESSA ROAD
SAN JOSE CA 95132

SPE RESPONSE FOR CERTIFICATE OF CORRECTION

Paper No.: _____

DATE : 01/20/06

TO SPE OF : ART UNIT **3722**

SUBJECT : Request for Certificate of Correction on Patent No.: 10/319919 6929591

A response is requested with respect to the accompanying request for a certificate of correction.

Please complete this form and return with file, within **7** days to:
Palm location **7580, Certificates of Correction Branch – South Tower – 9A22**
If response is for an IFW, **return to employee (named below) via PUBSCofC Team in MADRAS.**
With respect to the change(s) requested, correcting Office and/or Applicant's errors, should the patent read as shown in the certificate of correction (COCIN)? No new matter should be introduced, nor should the scope or meaning of the claims be changed.

Thank You For Your Assistance

Angela Green
Certificates of Correction Branch
Tel. No. 703-305-9380 ext. 123

The request for issuing the above-identified correction(s) is hereby:
Note your decision on the appropriate box.

☒ **Approved**	**All** changes apply.
☐ **Approved in Part**	Specify below which changes **do not** apply.
☐ **Denied**	State the reasons for denial below.

Comments:

BOYER D. ASHLEY
SUPERVISORY PATENT EXAMINER

SPE 3722 **Art Unit**

UNITED STATES PATENT AND TRADEMARK OFFICE

COMMISSIONER FOR PATENTS
UNITED STATES PATENT AND TRADEMARK OFFICE
P.O. BOX 1450
ALEXANDRIA, VA 22313-1450
www.uspto.gov

KATTEN MUCHIN ROSENMAN LLP
575 MADISON AVENUE
NEW YORK, NY 10022-2585

COPY MAILED

MAY 10 2007

OFFICE OF PETITIONS

In re Application of :
Naoki Matsuhira :
Application No. 10/319,930 : ON PETITION
Filed: December 12, 2002 :
Attorney Docket No. FUJH 20.135 :

This is a decision on the petition under 37 CFR 1.137(b), filed January 24, 2007, to revive the above-identified application.

The petition is **GRANTED**.

The application became abandoned for failure to timely file a reply within the meaning of 37 CFR 1.113 to the final Office action of July 20, 2006. A Notice of Abandonment was subsequently mailed on April 16, 2007.

The proposed reply required for consideration of a petition to revive must be a Notice of Appeal (and appeal fee required by 37 CFR 41.20(b)(2), an amendment that *prima facie* places the application in condition for allowance, a Request for Continued Examination and submission (37 CFR 1.114), or the filing of a continuing application under 37 CFR 1.53(b). See MPEP 711.03(c)(III)(A)(2).

The petition satisfies the requirements of 37 CFR 1.137(b) in that petitioner has supplied (1) the reply in the form of a Request for Continued Examination (RCE) and fee of $790, and the submission required by 37 CFR 1.114; (2) the petition fee of $1,500; and (3) an adequate statement of unintentional delay[1].

This application is being referred to Technology Center AU 2152 for processing of the RCE and for appropriate action by the Examiner in the normal course of business on the amendment submitted in accordance with 37 CFR 1.114.

[1] 37 CFR 1.137(b)(3) requires a statement that the entire delay in filing the required reply from the due date for the reply until the filing of a grantable petition pursuant to 37 CFR 1.137(b) was unintentional. Although the statement contained in the petition varies from the language required by 37 CFR 1.137(b)(3), the statement will be construed as the statement required by 37 CFR 1.137(b)(3). Petitioner must notify the Office if this is **not** a correct interpretation of the statement contained in the instant petition.

Telephone inquiries concerning this decision should be directed to the undersigned at (571) 272-3204. Inquiries relating to further prosecution should be directed to the Technology Center.

Sherry D. Brinkley
Petitions Examiner
Office of Petitions

UNITED STATES PATENT AND TRADEMARK OFFICE

Commissioner for Patents
United States Patent and Trademark Office
P.O. Box 1450
Alexandria, VA 22313-1450
www.uspto.gov

SCHWEGMAN, LUNDBERG, WOESSNER & KLUTH, P.A.
P.O. BOX 2938
MINNEAPOLIS, MN 55402

COPY MAILED

JUL 2 1 2006

OFFICE OF PETITIONS

In re Application of	:	
Thomas et al.	:	
Application No. 10/319,944	:	DECISION ON PETITION
Filed: December 16, 2002	:	TO WITHDRAW
Attorney Docket No. 340.007US1	:	FROM RECORD
	:	

This is a decision on the Request to Withdraw as attorney or agent of record under 37 C.F.R. § 1.36(b), filed March 29, 2006.

The request is **NOT APPROVED**.

A grantable request to withdraw as attorney/agent of record must be signed by every attorney/agent seeking to withdraw or contain a clear indication that one attorney is signing on behalf of another/others. A request to withdraw will not be approved unless at least 30 (thirty) days would remain between the date of approval and the later of the expiration date of a time to file a response or the expiration date of the maximum time period which can be extended under 37 C.F.R. § 1.136(a).

The Office cannot approve the request at this time since the reason provided does not meet any of the conditions under the mandatory or permissive categories enumerated in 37 CFR 10.40. Section 10.40 of Title 37 of the Code of Federal Regulation states, "[a] practitioner shall not withdraw from employment in a proceeding before the Office without permission from the Office[.]" More specifically, 37 CFR 10.40 states, "[i]f paragraph (b) of this section is not applicable, a practitioner may not request permission to withdraw in matter pending before the Office unless such request or such withdrawal is" for one the permissive reasons listed in 37 CFR 10.40(c). The reason set forth in the request, "discontinuation of attorney/client relationship", does not meet any the conditions set forth in 37 CFR 10.40.

Although the Power of Attorney submitted on May 12, 2006 was accepted, it was not proper. Since the Power of Attorney was submitted by the assignee, a Statement under 37 CFR 3.73(b) was required. If the assignee wishes for the Power of Attorney to remain valid, the Statement under 37 CFR 3.373(b) must be submitted.

All future communications from the Office will continue to be directed to the below-listed address until otherwise notified by applicant.

Telephone inquiries concerning this decision should be directed to Petitions Examiner Liana Chase at 571-272- 3206.

David Bucci
Petitions Examiner
Office of Petitions

cc:

DANN, DORFMAN, HERRELL & SKILLMAN
1601 MARKET STREET
SUITE 2400
PHILADELPHIA PA 19103-2307

UNITED STATES PATENT AND TRADEMARK OFFICE

Commissioner for Patents
United States Patent and Trademark Office
P.O. Box 1450
Alexandria, VA 22313-1450
www.uspto.gov

JOHN R. BENEFIEL
SUITE 100B
280 DAINES STREET
BIRMINGHAM, MI 48009

COPY MAILED

SEP 13 2004

OFFICE OF PETITIONS

In re Application of
David J. Bauer et al
Application No. 10/319,956
Filed: December 16, 2002
Attorney Docket No. TIP-119-4

: DECISION ON PETITION
: UNDER 37 CFR 1.78(a)(3)
:
:

This is a decision on the petition under 37 CFR 1.78(a)(3), filed March 4, 2004, to accept an unintentionally delayed claim under 35 U.S.C. §120 for the benefit of the prior-filed nonprovisional application set forth in the concurrently filed amendment.

The petition is **DISMISSED**.

A petition for acceptance of a claim for late priority under 37 CFR 1.78(a)(3) is only applicable to those applications filed on or after November 29, 2000. Further, the petition is appropriate only after the expiration of the period specified in 37 CFR 1.78(a)(2)(ii). In addition, the petition under 37 CFR 1.78(a)(3) must be accompanied by:

(1) the reference required by 35 U.S.C. § 120 and 37 CFR 1.78(a)(2)(I) of the prior-filed application, unless previously submitted;

(2) the surcharge set forth in § 1.17(t); and

(3) a statement that the entire delay between the date the claim was due under 37 CFR 1.78(a)(2)(ii) and the date the claim was filed was unintentional. The Commissioner may require additional information where there is a question whether the delay was unintentional.

The instant petition does not comply with item (1)

37 CFR 1.78(a)(2)(i) requires that any nonprovisional application claiming the benefit of one or more prior-filed copending nonprovisional applications must contain or be amended to contain a reference to each such prior-filed application, identifying it by application number (consisting of the series code and serial number) and indicating the relationship of the applications. The relationship between the applications is whether the subject application is a continuation,

divisional, or continuation-in-part of a prior-filed nonprovisional application. An example of a proper benefit claim is: "This application is a continuation of Application No. 10/---, filed---." A benefit claim that merely states: "This application claims the benefit of Application No. 10/---, filed---," does not comply with 37 CFR 1.72(a)(2)(i) since the proper relationship, which includes the type of continuing application, is not stated. Also, the status of each nonprovisional parent application (if it is patented or abandoned) should also be indicated, following the filing date of the parent nonprovisional application. See Manual of Patent Examining Procedure, 8th ed., August 2001), Section 201.11, Reference to First Application. If in fact the present application is a continuation-in-part of all the other applications or some of the applications, the word "and is a continuation-in-part" must be used to denote the relationship of the instant application to the other applications to which priority is sought. In the instant case, the amendment filed March 4, 2004 fails to clearly state the relationship of Application No. 08/109,122, filed December 16, 2002, with any one of the prior-filed application(s).

Petitioner is also reminded that, where an application claims a benefit under 35 U.S.C. § 120 of a chain of applications, the application must make a reference to the first (earliest) application and **every intermediate application.** See Sampson v. Ampex Corp., 463 F.2d 1042, 1044-45, 174 USPQ 417, 418-19 (2d Cir. 1972); Sticker Indus. Supply Corp. V. Blaw-Knox Co., 405 F.2d 90, 93, 160 USPQ 177, 179 (7th Cir. 1968); Hovlid v. Asari, 305 F.2d 747, 751, 134 USPQ 162, 165 (9th Cir. 1962). See also MPEP § 201.11. In addition, every intermediate application must also make a reference to the first (earliest) application and every application after the first application and before such intermediate application. MPEP Section 201.06(d).

Accordingly, before the petition under 37 CFR § 1.78(a)(3) can be granted, a renewed petition under 37 CFR § 1.78(a)(3) and a substitute amendment[1] clearly stating the relationship of Application No. 08/109,122 with any of the prior-filed application(s) to the instant application is required.

Further correspondence with respect to this matter should be addressed as follows:

By mail: Mail Stop PETITIONS
Commissioner for Patents
Post Office Box 1450
Alexandria, VA 22313-1450

[1] *Note* 37 CFR 1.121

By hand:	Customer Window located at: U.S. Patent and Trademark Office 220 20th Street S Customer Window, Mail Stop Petitions Crystal Plaza Two Lobby, Room 1B03 Arlington, VA 22202
By fax:	(703) 872-9306 ATTN: Office of Petitions

Any questions concerning this matter may be directed to Irvin Dingle at (703) 306-5684.[2]

Frances Hicks
Lead Petitions Examiner
Office of Petitions
Office of the Deputy Commissioner
for Patent Examination Policy

[2] Effective September 27, 2004, the phone number will be (571) 272-3210.

UNITED STATES PATENT AND TRADEMARK OFFICE

Commissioner for Patents
United States Patent and Trademark Office
P.O. Box 1450
Alexandria, VA 22313-1450
www.uspto.gov

JOHN R. BENEFIEL
SUITE 100 B
280 DAINES STREET
BIRMINGHAM, MI 48009

COPY MAILED

MAR 0 9 2005

OFFICE OF PETITIONS

In re Application of :
David J. Bauer et al :
Application No. 10/319,956 : DECISION ON PETITION
Filed: December 16, 2002 : UNDER 37 CFR 1.78(a)(3)
Attorney Docket No. TIP-119-4

This is a decision on the renewed petition filed September 30, 2004, under 37 CFR 1.78(a)(3), to accept an unintentionally delayed claim under 35 U.S.C. § 120 for the benefit of priority to the prior-filed nonprovisional applications, as set forth in the concurrently filed amendment.

The petition is **GRANTED**.

A petition for acceptance of a claim for late priority under 37 CFR 1.78(a)(3) is only applicable to those applications filed on or after November 29, 2000. Further, the petition is appropriate only after the expiration of the period specified in 37 CFR 1.78(a)(2)(ii). In addition, the petition under 37 CFR 1.78(a)(3) must be accompanied by:

> **(1)** the reference required by 35 U.S.C. § 120 and 37 CFR 1.78(a)(2)(i) of the prior-filed application, unless previously submitted;
> **(2)** the surcharge set forth in § 1.17(t); and
> **(3)** a statement that the entire delay between the date the claim was due under 37 CFR 1.78(a)(2)(ii) and the date the claim was filed was unintentional. The Commissioner may require additional information where there is a question whether the delay was unintentional.

The instant pending application was filed on December 16, 2002, and was pending at the time of filing of the instant petition. A reference to the prior-filed nonprovisional applications has been included in an amendment to the first sentence of the specification following the title as required by 37 CFR 1.78(a)(2)(iii).

The instant nonprovisional application was filed after November 29, 2000, and the claim herein for the benefit of priority to the prior-filed nonprovisional applications is submitted after expiration of the period specified in 37 CFR 1.78(a)(2)(ii). Also, the reference to the prior-filed nonprovisional applications was submitted during the pendency of the instant nonprovisional

application, for which the claim for benefit of priority is sought. *See* 35 U.S.C. § 120. Accordingly, having found that the instant petition for acceptance of an unintentionally delayed claim for the benefit of priority under 35 U.S.C. § 120 to the prior-filed nonprovisional applications satisfies the conditions of 37 CFR 1.78(a)(3), the petition is granted.

The granting of the petition to accept the delayed benefit claim to the prior-filed applications under 37 CFR 1.78(a)(3) should not be construed as meaning that the instant application is entitled to the benefit of the prior-filed applications. In order for the instant application to be entitled to the benefit of the prior-filed applications, all other requirements under 35 U.S.C. § 120 and 37 CFR 1.78(a)(1) and (a)(2) must be met. Similarly, the fact that the corrected Filing Receipt accompanying this decision on petition includes the prior-filed applications should not be construed as meaning that applicant is entitled to the claim for benefit of priority to the prior-filed applications noted thereon. Accordingly, the examiner will, in due course, consider this benefit claim and determine whether the instant application is entitled to the benefit of the earlier filing date.

Any inquiries concerning this decision may be directed to Irvin Dingle at (571) 272-3210.

This matter is being forwarded to Technology Center Art Unit 1732.

Frances Hicks
Petitions Examiner
Office of Petitions
Office of the Deputy Commissioner
for Patent Examination Policy

Attachment: Corrected Filing Receipt

UNITED STATES PATENT AND TRADEMARK OFFICE

Commissioner for Patents
United States Patent and Trademark Office
P.O. Box 1450
Alexandria, VA 22313-1450
www.uspto.gov

VISTEON
C/O BRINKS HOFER GILSON & LIONE
PO BOX 10395
CHICAGO, IL 60610

COPY MAILED

NOV 12 2004

OFFICE OF PETITIONS

In re Application of
Sinkunas, Lemecha, Glovatsky, Shi, Zhang, and You
Application No.: 10/319,958
Filed: December 16, 2002
Attorney Docket No: 10541-1635
For: INTEGRATED FLEX SUBSTRATE METALLURGICAL BONDING

: DECISION ACCORDING
: RULE 47(a) STATUS

This is in response to the petition under 37 CFR 1.47(a), filed October 14, 2004 (certificate of mailing dated October 12, 2004.)

The petition is **GRANTED**.

The above-identified application and papers have been reviewed and found in compliance with 37 CFR 1.47(a). This application is hereby accorded Rule 1.47(a) status.

The above-cited application was filed on December 16, 2002, and was accompanied by the a declaration that was not signed by inventor You. A Notice to File Missing Parts of Nonprovisional Application was mailed on February 7, 2003, requiring a declaration with the signature of inventor You and a surcharge. On March 11, 2003, a declaration executed by inventor Your was filed. On July 12, 2004, the examiner assigned to the application mailed a non-final Office action that indicated, in part, the declaration, in its entirety, was objected to because it did not include certain required language. The notice allowed an extendable period for reply of three months from its mailing date. On October 14, 2004 (certificate of mailing dated October 12, 2004), the instant petition was filed along with a new declaration executed by all joint inventors, excepting inventor You.

Petitioner has shown that inventor You is unavailable to join the filing of the above-identified application. The above-identified application and papers have been reviewed and found in compliance with 37 CFR 1.47(a). This application is hereby accorded Rule 1.47(a) status.

As provided in Rule 1.47(c), this Office will forward notice of this application's filing to the non-signing inventor at the addresses given in the petition. Notice of the filing of this application will also be published in the Official Gazette.

This application will be forwarded to Technology Center 1700, GAU 1725 for further processing.

Telephone inquiries should be directed to the undersigned at (571) 272-3222.

Kenya A. McLaughlin

Kenya A. McLaughlin
Petitions Attorney
Office of Petitions

UNITED STATES PATENT AND TRADEMARK OFFICE

Commissioner for Patents
United States Patent and Trademark Office
P.O. Box 1450
Alexandria, VA 22313-1450
www.uspto.gov

Kevin You
24590 Lincoln Court, #180
Farmington Hills, MI 48335

COPY MAILED

NOV 12 2004

OFFICE OF PETITIONS

In re Application of
Sinkunas, Lemecha, Glovatsky, Shi, Zhang, and You
Application No. 10/319,958
Filed: December 16, 2002
Attorney Docket No. 10541-1635
For: INTEGRATED FLEX SUBSTRATE METALLURGICAL BONDING

: LETTER

Dear Mr. You:

You are named as a joint inventor in the above-identified United States patent application filed under the provisions of 35 U.S.C. 116 (United States Code) and 37 CFR 1.47(a), Rules of Practice in Patent Cases. Should a patent be granted on the application you will be designated therein as a joint inventor.

As a joint inventor, you are entitled to inspect any paper in the file wrapper of the application, order copies of all or any part thereof (at a prepaid cost per 37 CFR 1.19) or make your position of record in the application. Alternatively, you may arrange to do any of the preceding through a registered patent attorney or agent presenting written authorization from you. If you care to join the application, counsel of record (see below) would presumably assist you. Joining in the application would entail the filing of an appropriate oath or declaration by you pursuant to 37 CFR 1.63. It should be further noted that any assignee of record of the entire interest in the application may request that the inventor(s) be excluded from access to the application. If the request is granted, you will be informed of that fact and will only be permitted to inspect the application on sufficient showing of why such inspection is necessary to conserve your rights. See *MPEP* 106, citing, *In re The Kellog Switchboard & Supply Company*, 1906 C.D. 274 (Comm'r Pat. 1906).

Telephone inquiries regarding this communication should be directed to Petitions Attorney Kenya A. McLaughlin at (571) 272-3222. Requests for information regarding your application should be directed to the File Information Unit at (703) 308-2733. Information regarding how to pay for and order a copy of the application, or a specific paper in the application, should be directed to Certification Division at (703) 308-9726 or 1-800-972-6382 (outside the Washington D.C. area).

Kenya A. McLaughlin
Petitions Attorney
Office of Petitions

Visteon
c/o Brinks Hofer Gilson & Lione
PO Box 10395
Chicago, IL 60610

UNITED STATES PATENT AND TRADEMARK OFFICE

Commissioner for Patents
United States Patent and Trademark Office
P.O. Box 1450
Alexandria, VA 22313-1450
www.uspto.gov

WELSH & KATZ, LTD
120 S RIVERSIDE PLAZA
22ND FLOOR
CHICAGO, IL 60606

COPY MAILED
JUN 2 4 2004
OFFICE OF PETITIONS

In re Application of

Gerald J. Vasek :

Application No. 10/320,001

: DECISION ON PETITION

Filed: December 16, 2002

:

Attorney Docket No. NTV.106.0US (88517)

This is a decision on the petition under 37 CFR 1.137(b), filed April 28, 2004, to revive the above-identified application.

The petition is **GRANTED**.

The above-cited application became abandoned for failure to reply in a timely manner to the non-final Office action mailed September 10, 2003, which set a shortened statutory period for reply of three (3) months from its mailing date. No extension of time pursuant to 37 CFR 1.136(a) was obtained within the allowable period. Accordingly, the application became abandoned on December 11, 2003. A Notice of Abandonment was mailed on May 3, 2004.

The amendment filed April 28, 2004, is noted and made of record.

The application is being forwarded to Technology Center 1600 for further processing.

Telephone inquiries concerning this decision should be directed to the undersigned at (703) 305-0010.

Kenya A. McLaughlin
Petitions Attorney
Office of Petitions

UNITED STATES PATENT AND TRADEMARK OFFICE

Commissioner for Patents
United States Patent and Trademark Office
P.O. Box 1450
Alexandria, VA 22313-1450
www.uspto.gov

OKAMOTO & BENEDICTO, LLP
P.O. BOX 641330
SAN JOSE, CA 95164

COPY MAILED

DEC 16 2004

OFFICE OF PETITIONS

In re Application of :
Smith, et al. :
Application No. 10/320,012 : ON PETITION
Filed: December 16, 2002 :
Attorney Docket No. 10002.001500 :

This is a decision on the petition under 37 CFR 1.137(b), filed November 29, 2004, to revive the above-identified application.

The petition is **GRANTED**.

This application became abandoned for failure to timely file corrected drawings on or before November 18, 2004 as required by the Notice of Allowability mailed August 18, 2004. Accordingly, this application became abandoned on November 19, 2004.

This application is being forwarded to Publishing Division for review of the drawings filed November 22, 2004.

Telephone inquiries concerning this matter may be directed to the undersigned at (571)272-3228.

Edward J. Tannouse
Petitions Attorney
Office of Petitions
United States Patent and Trademark Office

UNITED STATES PATENT AND TRADEMARK OFFICE

Commissioner for Patents
United States Patent and Trademark Office
P.O. Box 1450
Alexandria, VA 22313-1450
www.uspto.gov

LADAS & PARRY LLP
224 SOUTH MICHIGAN AVENUE
SUITE 1600
CHICAGO IL 60604

COPY MAILED

FEB 22 2008

OFFICE OF PETITIONS

In re Application of	:	
Mariko Gotou	:	
Application No. 10/320,047	:	DECISION GRANTING PETITION
Filed: December 16, 2002	:	UNDER 37 CFR 1.137(b)
Attorney Docket No. CU-5989	:	

This is a decision on the petition under 37 CFR 1.137(b), filed June 22, 2007 and supplemented on February 1, 2008, to revive the above-identified application.

The petition is **GRANTED**.

The petition satisfies the conditions for revival pursuant to the provisions of 37 CFR 1.137(b) in that (1) the reply in the form of an RCE and an amendment; (2) the petition fee; and (3) the required statement of unintentional delay have been received. Accordingly, the reply to the Final Rejection mailed July 13, 2005, is accepted as having been unintentionally delayed.

Telephone inquiries concerning this decision should be directed to the undersigned at (571) 272-3208.

This matter is being referred to Technology Center AU 2879.

Karen Creasy
Petitions Examiner
Office of Petitions

UNITED STATES PATENT AND TRADEMARK OFFICE

COMMISSIONER FOR PATENTS
UNITED STATES PATENT AND TRADEMARK OFFICE
P.O. BOX 1450
ALEXANDRIA, VA 22313-1450
www.uspto.gov

JUN 17 2004

Mailed:

spg
Paper Number 5

In re application of	:	
Vaughn Liljenquist	:	DECISION ON
Serial No. 10/320,074	:	PETITION
Filed: December 16, 2002	:	
For: CEMENT COMPOSITIONS AND ADMIXTURES THEREFORE	:	

This is a response to the REQUEST FOR WITHDRAWAL OF NOTICE OF ABANDONMENT, filed February 13, 2004. The request asks that the abandonment, as set forth in the Notice of Abandonment of February 5, 2004, for failure to timely file a proper reply to the Office letter mailed June 18, 2003 be withdrawn since the applicants did timely file a reply on August 21, 2003. (A copy of the reply is attached to the instant petition as well as a copy of the USPTO date stamped postcard receipt.)

DECISION

The instant request has been accepted as a petition to withdraw the holding of abandonment under the provisions of 37 CFR 1.181 (no fee) - no abandonment-in-fact. A review of the evidence presented reveals that applicant's reply was properly filed on August 21, 2003 as evidenced by the properly completed Certificate of Mailing thereon and the copy of the USPTO date stamped return receipt postcard indicating receipt of the reply at the USPTO on August 26, 2003. Accordingly, any holding of abandonment for failure to timely file a proper reply to the Office letter mailed June 18, 2003 is hereby vacated, and the application is returned to pending status.

The application shall be forwarded to the examiner for entry, processing and consideration of the reply originally filed August 21, 2003.

The Petition is **GRANTED**.

JMStone

Jacqueline Stone, Director
Technology Center 1700
Chemical and Materials Engineering

FRANK J. MCGUE
10801 N. 32ND STREET SUITE 5
PHOENIX AZ 85028

UNITED STATES PATENT AND TRADEMARK OFFICE

COMMISSIONER FOR PATENTS
UNITED STATES PATENT AND TRADEMARK OFFICE
WASHINGTON, D.C. 20231
www.uspto.gov

Paper No. 7

LAHIVE & COCKFIELD
28 STATE STREET
BOSTON, MA 02109

COPY MAILED

JUN 20 2003

OFFICE OF PETITIONS

In re Application of :
Van De Winkel, et al. :
Application No. 10/320,094 : ON PETITION
Filed: December 16, 2002 :
Attorney Docket No. GMI-020CP :

This is a decision on the petition filed May 5, 2003, and supplemented on June 12, 2003, requesting that the above-identified application be accorded a filing date of December 16, 2002, including Figures 10A and 10B as described in the specification.

The application was filed on December 16, 2002. However, on February 21, 2003, the Office of Initial Patent Application mailed a "Notice To File Missing Parts" (Notice) that stated the application had been accorded a filing date, but Figures 10A and 10B as described in the specification appear to have been omitted.

In response, on May 5, 2003, and supplemented on June 12, 2003, the instant petition was submitted. Petitioner asserts that the drawing originally labeled as Figure 10 contains two figures which should be correctly labeled as Figures 10A and 10B. Petitioner has submitted a Preliminary Amendment to correctly re-label the Figures.

In view of the papers filed on May 5, 2003, and supplemented on June 12, 2003, it appears that the drawings of Figures 10A and 10B were present on December 16, 2002, but mislabelled by applicants. Since it is now clear that Figures 10A and 10B were present on December 16, 2002, albeit misnumbered, the Figures may be considered as filed with the application on December 16, 2002.

The petition is granted.

Please note, the $130.00 petition fee is required, since a petition was necessary to correct applicants' filing error, and not necessitated by any error on the part of the Office.

This application will be returned to OIPE for further processing with a filing date of December 16, 2002.

Telephone inquiries concerning this matter may be directed to the undersigned at (703) 306-9200.

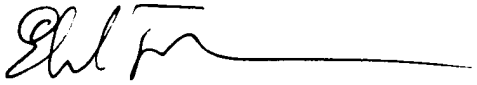

Edward J. Tannouse
Petitions Attorney
Office of Petitions
United States Patent and Trademark Office

UNITED STATES PATENT AND TRADEMARK OFFICE

Commissioner for Patents
United States Patent and Trademark Office
P.O. Box 1450
Alexandria, VA 22313-1450
www.uspto.gov

LAHIVE & COCKFIELD, LLP
FLOOR 30, SUITE 3000
ONE POST OFFICE SQUARE
BOSTON, MA 02109

MAILED

AUG 3 1 2009

OFFICE OF PETITIONS

In re Application of :
Jan van de Winkle et al. :
Application No. 10/320,094 : LETTER REGARDING
Filed: December 16, 2002 : PATENT TERM ADJUSTMENT
Attorney Docket No. GMI-020CPRCE2 :

This letter is in response to the "Request for Review of Patent Term Adjustment" filed May 11, 2009. Pursuant to applicants' duty of good faith and candor to the Office, applicants request the determination of patent term adjustment under 35 U.S.C. 154(b) be reviewed for accuracy.

The request for review of the patent term adjustment is **dismissed**.

On February 13, 2009, the Office mailed the Determination of Patent Term Adjustment under 35 U.S.C. 154(b) in the above-identified application. The Notice stated the patent term adjustment to date is 395 days.

Applicants state the 395 day determination of patent term adjustment may extend the patent by too many days in view of a terminal disclaimer filed during the prosecution of the application.

35 U.S.C. 154(b)(2)(B) provides that:

> No patent the term of which has been disclaimed beyond a specified date may be adjusted under this section beyond the expiration date specified in the disclaimer.

37 CFR § 1.703(g) provides that:

> No patent, the term of which has been disclaimed beyond a specified date, shall be adjusted under § 1.702 and this section beyond the expiration date specified in the disclaimer.

The provisions of § 154(b), for adjustment due to examination delay, apply to original applications,[1] other than designs, filed on or after May 29, 2000. The Office calculates patent

[1] Since a continued prosecution application (CPA) under § 1.53(d) is a new application, the filing of a CPA application on or after May 29, 2000, in an application filed before May 29, 2000 causes the application (CPA) to be eligible for patent term adjustment.

term adjustment for examination delay in all eligible applications. In calculating the patent term adjustment, the Office does not differentiate between applications that have terminal disclaimers and those that do not. Nor does the Office undertake the burdensome task of reviewing every application with a terminal disclaimer to determine if the patent term adjustment accorded would adjust the term beyond the expiration date specified in the disclaimer.

Rather, on issuance of the application, in compliance with 35 U.S.C. 154(b) and 37 CFR § 1.703(g), it is indicated in the patent that the patent term adjustment indicated therein is subject to any disclaimer. Moreover, it is also stated therein that the patent is subject to a terminal disclaimer.

For the previous reasons, the patent term adjustment remains 395 days as set forth on the Determination of Patent Term Adjustment under 35 U.S.C. 154(b).

As this letter was submitted as an attempt to advise the Office of an error in applicants' favor, the Office will not assess the $200.00 application fee under 37 CFR 1.705(b). The Office thanks applicants for their good faith and candor in bringing this to the attention of the Office.

Applicants are reminded that any delays by the Office pursuant to 37 CFR 1.702(a)(4) and 1.702(b) and any applicant delays under 37 CFR 1.704(c)(10) will be calculated at the time of the issuance of the patent and applicants will be notified of the revised patent term adjustment to be indicated on the patent in the Issue Notification letter that is mailed to applicants approximately three weeks prior to issuance.

The Office of Data Management has been advised of this decision. This matter is being referred to the Office of Data Management for issuance of the patent.

Telephone inquiries specific to this decision should be directed to Senior Petitions Attorney Steven Brantley at (571) 272-3203.

Nancy Johnson
Senior Petitions Attorney
Office of Petitions

SPE RESPONSE FOR CERTIFICATE OF CORRECTION

Paper No.: X

DATE : AUGUST 13, 2007

TO SPE OF : ART UNIT 1652

SUBJECT : Request for Certificate of Correction for Appl. No.: 10/320104 Patent No.: 6929935 B2

A response is requested with respect to a request for a certificate of correction.

With respect to the change(s) requested to correct Office and/or Applicant's errors, should the patent read as shown in the certificate of correction attached herewith or the COCIN document(s), in IFW images for the above-identified patented application? No new matter should be introduced, nor should the scope or meaning of the claims be changed.

If the response is for an IFW, within **7** days, please complete and forward the response, to the employee (named below) via scanning into application images, using document code **COCX**.

DO NOT SENT TO ATTORNEY

If the response is for a paper file wrapper, please complete the response and forward the response with the paper file wrapper, to the employee (named below), within **7** days, to:

Certificates of Correction Branch (CofC)
South Tower - 9A22
Palm Location 7580

LAMONTE NEWSOME
Certificates of Correction Branch
703-308-9390 ext. 113

Thank You For Your Assistance

The request for issuing the above-identified correction(s) is hereby:

Note your decision on the appropriate box.

☒ **Approved**	**All** changes apply.
☐ **Approved in Part**	Specify below which changes **do not** apply.
☐ **Denied**	State the reasons for denial below.

Comments: _____

_____

_____

_____

_____

_____ 1652

SPE **Art Unit**

UNITED STATES PATENT AND TRADEMARK OFFICE

Commissioner for Patents
United States Patent and Trademark Office
P.O. Box 1450
Alexandria, VA 22313-1450
www.uspto.gov

ACUSHNET COMPANY
333 BRIDGE STREET
P.O. BOX 965
FAIRHAVEN MA 02719

COPY MAILED

DEC 1 4 2004

OFFICE OF PETITIONS

In re Application of :
Michael J. Sullivan et al :
Application No. 10/320,144 : ON PETITION
Filed: December 16, 2002 :
Attorney Docket No. B02-44 :

This is a decision on the petition under 37 CFR 1.137(b), filed November 12, 2004, to revive the above-identified application.

The petition is **GRANTED**.

The above-identified application became abandoned for failure to submit the issue fee in a timely manner in reply to the Notice of Allowance mailed August 10, 2004, which set a statutory period for reply of three (3) months. Accordingly, the above-identified application became abandoned on November 11, 2004.

Telephone inquiries concerning this decision should be directed to the undersigned at (571) 272-3208.

The application file is being referred to the Office of Patent Publication.

Karen Creasy

Karen Creasy
Petitions Examiner
Office of Petitions
Office of the Deputy Commissioner
for Patent Examination Policy

UNITED STATES PATENT AND TRADEMARK OFFICE

Commissioner for Patents
United States Patent and Trademark Office
P. O. Box 1450
Alexandria, VA 22313-1450
www.uspto.gov

F. CHAU & ASSOCIATES, LLC
130 WOODBURY ROAD
WOODBURY, NY 11797

COPY MAILED

AUG 2 2 2007

OFFICE OF PETITIONS

In re Application of :
Krishnan K. Kailas :
Application No. 10/320,150 : ON PETITION
Filed: December 16, 2002 :
Attorney Docket No. YOR920020291US1 :

This is a decision on the petition under 37 CFR 1.137(b), filed April 2, 2007, to revive the above-identified application.

The petition is **GRANTED**.

The above-identified application became abandoned for failure to reply in a timely manner to the non-final Office action mailed June 3, 2005, which set a shortened statutory period for reply of three (3) months. No extension of time under the provisions of 37 CFR 1.136(a) were obtained. Accordingly, the above-identified application became abandoned on September 4, 2005.

Telephone inquiries concerning this decision should be directed to Irvin Dingle at (571) 272-3210.

This matter is being referred to Technology Center AU 2183 for further processing.

Irvin Dingle
Petitions Examiner
Office of Petitions

UNITED STATES PATENT AND TRADEMARK OFFICE

UNITED STATES DEPARTMENT OF COMMERCE
United States Patent and Trademark Office
Address: COMMISSIONER FOR PATENTS
P.O. Box 1450
Alexandria, Virginia 22313-1450
www.uspto.gov

APPLICATION NUMBER	FILING OR 371 (c) DATE	FIRST NAMED APPLICANT	ATTY. DOCKET NO./TITLE
10/320,150	12/16/2002	Krishnan K. Kailas	YOR920020291US1

CONFIRMATION NO. 2785

OC000000025483618

46069
F. CHAU & ASSOCIATES, LLC
130 WOODBURY ROAD
WOODBURY, NY 11797

Date Mailed: 08/21/2007

NOTICE OF ACCEPTANCE OF POWER OF ATTORNEY

This is in response to the Power of Attorney filed 04/02/2007.

The Power of Attorney in this application is accepted. Correspondence in this application will be mailed to the above address as provided by 37 CFR 1.33.

UNITED STATES PATENT AND TRADEMARK OFFICE

Commissioner for Patents
United States Patent and Trademark Office
P.O. Box 1450
Alexandria, VA 22313-1450
www.uspto.gov

ALCATEL USA
INTELLECTUAL PROPERTY DEPARTMENT
3400 W. PLANO PARKWAY, MS LEGL2
PLANO, TX 75075

COPY MAILED

MAY 10 2007

OFFICE OF PETITIONS

In re Application of :
Kenneth E. DePaul et al :
Application No. 10/320,163 : DECISION ON PETITION
Filed: December 16, 2002 : UNDER 37 CFR 1.137(b)
Attorney Docket No. 139048US :

This is a decision on the petition, filed November 14, 2006, which is being treated as a petition under 37 CFR 1.137(b) to revive the instant nonprovisional application for failure to timely notify the U.S. Patent and Trademark (USPTO) of the filing of an application in a foreign country, or under a multinational treaty that requires publication of applications eighteen months after filing. *See* 37 CFR 1.137(f).

The petition is **GRANTED**.

Petitioner states that the instant nonprovisional application is the subject of an application filed in an eighteen-month publication country on December 3, 2003. However, the USPTO was unintentionally not notified of this filing within 45 days subsequent to the filing of the subject application in an eighteen-month publication country.

In view of the above, this application became abandoned pursuant to 35 U.S.C. § 122(b)(2)(B)(iii) and 37 CFR 1.213(c) for failure to timely notify the Office of the filing of an application in a foreign country or under a multilateral international agreement that requires publication of applications 18 months after filing.

A petition to revive an application abandoned pursuant to 35 U.S.C. 122(b)(2)(B)(iii) for failure to notify the USPTO of a foreign filing must be accompanied by:

(1) the required reply which is met by the notification of such filing in a foreign country or under a multinational treaty;
(2) the petition fee as set forth in 37 CFR 1.17(m); and
(3) a statement that the entire delay in filing the required reply from the due date of the reply until the filing of a grantable petition was unintentional.

The instant petition has been found to be in compliance with 37 CFR 1.137(b). Accordingly, the failure to timely notify the USPTO of a foreign or international filing within 45 days after the date of filing of such foreign or international application as provided by 35 U.S.C. § 122(b)(2)(B)(iii) and 37 CFR 1.213(c) is accepted as having been unintentionally delayed.

The previous Request and Certification under 35 U.S.C. § 122(b)(2)(B)(i) has been previously rescinded.

Telephone inquiries concerning this decision should be directed to the undersigned at (571) 272-3218.

This application currently has no outstanding Office actions.

Frances Hicks
Petitions Examiner
Office of Petitions

UNITED STATES PATENT AND TRADEMARK OFFICE

Commissioner for Patents
United States Patent and Trademark Office
P.O. Box 1450
Alexandria, VA 22313-1450
www.uspto.gov

Paper No.

STEPHEN B. DAVIS
BRISTOL-MYERS SQUIBB COMPANY
PATENT DEPARTMENT
P O BOX 4000
PRINCETON, NJ 08543-4000

COPY MAILED

MAY 2 5 2004

OFFICE OF PETITIONS

In re Application of :
Kanaka Koduri, John Miller and :
Pallaiah Thammana :
Application No. 10/320,176 :
Filed: December 16, 2002 :
Atty Docket No. DB5 CIP :
Title: EXPRESSION VECTORS :
CONTAINING HOT SPOT FOR INCREASED :
RECOMBINANT PROTEIN EXPRESSION IN :
TRANSFECTED CELLS :

DECISION REFUSING STATUS
UNDER 37 C.F.R. § 1.47(a)

This is in response to the "PETITION TO ADD PAGE TO COMBINED DECLARATION AND POWER OF ATTORNEY FOR SIGNATURE BY PERSON WHO IS AUTHORIZED BY THE ASSIGNEE WITH SUFFICIENT PROPRIETARY INTEREST WHERE ONE OF THE INVENTORS WHO REFUSES TO SIGN (37 C.F.R. § 1.47(b))," filed May 6, 2004. This petition is properly treated as a petition under 37 C.F.R. § 1.47(a)[1].

The petition under § 1.47(a) is **DISMISSED**.

Rule 47 applicant is given **TWO MONTHS** from the mailing date of this decision to reply, correcting the below-noted deficiencies. Any reply should be entitled "Request for Reconsideration of Petition Under 37 C.F.R. § 1.47(a)," and should only address the deficiencies noted below, except that the reply may include an oath or declaration executed by the non-signing inventor. **Failure to respond will result in abandonment of the application.** Any extensions of time will be governed by 37 C.F.R. § 1.136(a).

The above-identified application was filed on December 16, 2002, with a declaration executed in prior application No. 09/386,816. However, because the instant application is a continuation-in-part, this was not proper. On May 6, 2004, applicants filed the instant petition (and petition fee), a declaration executed by inventors Koduri and Thammana, and late surcharge. The

[1] Filing under 37 C.F.R. § 1.47(b) and 35 U.S.C. 118 is permitted only where no inventor is available to make application. In this instance, joint inventors Koduri and Thammana are available to join in the application.

declaration includes an added page executed by patent attorney Christopher Klein on behalf of non-signing inventor Miller.

A grantable petition under 37 C.F.R. § 1.47(a) requires: (1) proof that the non-signing inventor cannot be reached or refuses to sign the oath or declaration after having been presented with the application papers (specification, claims, and drawings); (2) an acceptable oath or declaration in compliance with 35 U.S.C. §§ 115 and 116; (3) the petition fee; and (4) a statement of the last known address of the non-signing inventor. The petition includes adequate proof of the unavailability of inventor Miller. Applicants have authorized that the petition fee be charged to Deposit Account No. 19-3380. The last known address of inventor Miller is deemed to be as set forth in the declaration. However, the petition is not grantable because it is deficient as to requirement (2).

The declaration as submitted is not acceptable. 37 CFR 1.47(a) and 35 U.S.C. 116, second paragraph, require all available joint inventors to file an application "on behalf of" themselves and on behalf of a joint inventor who "cannot be found or reached after diligent effort" or who refuses to "join in an application." Thus, in addition to other requirements of law (35 U.S.C. 111(a) and 115), in an application deposited in the U.S. Patent and Trademark Office pursuant to 37 CFR 1.47(a):

> (A) All the available joint inventors must (1) make oath or declaration on their own behalf as required by 37 CFR 1.63 or 1.175 (see MPEP §602, §605.01, and §1414) and (2) make oath or declaration on behalf of the non-signing joint inventor as required by 37 CFR 1.64. An oath or declaration signed by all the available joint inventors with the signature block of the non-signing inventor(s) left blank may be treated as having been signed by all the available joint inventors on behalf of the non-signing inventor(s), unless otherwise indicated.
>
> (Emphasis added).

Here, applicants have indicated, by having attorney Klein purportedly sign on behalf of non-signing inventor Miller, that the declaration as submitted is not signed by inventors Koduri and Thammana on behalf of themselves and on behalf of joint inventor Miller. Accordingly, a declaration signed by inventors Koduri and Thammana on behalf of themselves and on behalf of inventor Miller is required. (Their signatures should appear on the signature line for themselves and for inventor Miller, noting that they are signing on his behalf.)

Further correspondence with respect to this matter should be addressed as follows:

By mail: Mail Stop Petition
Commissioner for Patents
P.O. Box 1450
Alexandria, VA 22313-1450

By FAX: (703) 872-9306
ATTN: NANCY JOHNSON
SENIOR PETITIONS ATTORNEY

By hand: CUSTOMER SERVICE WINDOW[2]
2011 South Clark Place
Crystal Plaza Two Lobby
Arlington, VA 22202

Telephone inquiries concerning this matter may be directed to the undersigned at (703) 305-0309.

Nancy Johnson
Senior Petitions Attorney
Office of Petitions

---

[2] Effective June 5, 2004, patent correspondence delivered by hand or delivery services, other than the USPS, to the Customer Window must be addressed as follows:

U.S. Patent and Trademark Office
220 20th Street S.
Customer Window, Mail Stop _____
Crystal Plaza Two, Lobby, Room 1B03
Arlington, VA 22202

UNITED STATES PATENT AND TRADEMARK OFFICE

UNITED STATES DEPARTMENT OF COMMERCE
United States Patent and Trademark Office
Address: COMMISSIONER FOR PATENTS
P.O. Box 1450
Alexandria, Virginia 22313-1450
www.uspto.gov

February 27, 2004

Samuel Borodach
Fish & Richardson
45 Rockefeller Plaza, Suite 2800
New York, NY 10111

In re application of:
Naoyuki Yamabayashi, et al DECISION ON PETITION
Serial No.: 10/320,194
Filed: December 16, 2002
For: POTODIODE, OPTICAL RECEIVER DEVICE INCLUDING THE SAME, AND METHOD OF MAKING THE PHOTODIODE

This is a decision on the petition received on September 22, 2003, to waive the extension fee in the above-identified application.

The Notice to File Missing Parts of Nonprovisional Application was mailed on March 24, 2003. Which set a shortened statutory period for reply of two (2) months.

On September 22, 2003, the office received a communication from the attorney of record. Enclosed was an acknowledgement that the attorney never received the Notice to File Missing Parts of Nonprovisional Application mailed March 24, 2003.

The evidence submitted is sufficient to establish that the petitioners never received the Notice to File Missing Parts of Nonprovisional Application mailed March 24, 2003. Until, counsel requested a copy of the Notice to File Missing Parts of Nonprovisional Application from the Patent and Trademark Office by facsimile on August 8, 2003.

The petition is hereby Granted.

The application has been completed for release to Technology Center 2874.

The office regrets any inconvenience this may have caused the client.

Telephone inquiries concerning this matter may be directed to Doshie E. Day (703) 308-3640.

Doshie E. Day
Program Management Assistant
Office Initial Patent Examination

UNITED STATES PATENT AND TRADEMARK OFFICE

UNITED STATES DEPARTMENT OF COMMERCE
United States Patent and Trademark Office
Address: COMMISSIONER FOR PATENTS
P.O. Box 1450
Alexandria, Virginia 22313-1450
www.uspto.gov

MCANDREWS HELD & MALLOY, LTD
500 WEST MADISON STREET
SUITE 3400
CHICAGO, IL 60661

Mail Date: 04/21/2010

Applicant	: Wilf LeBlanc	: DECISION ON REQUEST FOR
Patent Number	: 7606330	: RECALCULATION of PATENT
Issue Date	: 10/20/2009	: TERM ADJUSTMENT IN VIEW
Appliction No	: 10/320,204	: OF WYETH AND NOTICE OF INTENT TO
Filed	: 12/16/2002	: ISSUE CERTIFICATE OF CORRECTION
		:

The Request for Recalculation is **GRANTED** to the extent indicated.

The patent term adjustment has been determined to be **926** days. The USPTO will *sua sponte* issue a certificate of correction reflecting the amount of PTA days determined by the recalculation.

Prior to the issuance of the certificate of correction, the USPTO will afford patentee an opportunity to be heard and request reconsideration. Accordingly, patentee has **one month or thirty (30) days**, whichever is longer, to file a request for reconsideration of this patent term adjustment calculation. See 35 U.S.C. 154(b)(3)(B)(ii) and 37 CFR 1.322(a)(4). No extensions of time will be granted under 37 CFR 1.136.

Patentee should use document code PET.OP if electronically filing a request for reconsideration of this patent term adjustment calculation. The patentee must also include the information required by 37 CFR 1.705(b)(2) and the fee required by 37 CFR 1.18(e). If patentee does not file a timely request for reconsideration of this patent term adjustment calculation including the information required by 37 CFR 1.705(b)(2) and the fee required by 37 CFR 1.18(e), the USPTO will issue a certificate of correction reflecting the PTA determination noted above.

Patentee should be aware that in order to preserve the right to review in the United States District Court for the District of Columbia of the USPTO patent term adjustment determination, patentee must ensure that he or she also take the steps required under 35 U.S.C. 154(b)(4)(A) in a timely manner. Nothing in the request for recalculation should be construed as providing an alternative time frame for commencing a civil action under 35 U.S.C. 154(b)(4)(A).

Any questions concerning this decision should be directed to the Office of Patent Legal Administration at 571-272-7702.

UNITED STATES PATENT AND TRADEMARK OFFICE

Commissioner for Patents
United States Patent and Trademark Office
P.O. Box 1450
Alexandria, VA 22313-1450
www.uspto.gov
DIW 12-04

YUKIKO IWATA
SHELL OIL COMPANY
LEGAL - INTELLECTUAL PROPERTY
P. O. BOX 2463
HOUSTON TX 77252-2463

COPY MAILED

DEC 2 2 2004

OFFICE OF PETITIONS

In re Application of	:	
Iwata et al.	:	
Application No. 10/320,213	:	DECISION DISMISSING
Filed: 16 December, 2002	:	PETITION
Atty Docket No. TS0887 02 (US)	:	

This is a decision on the petition filed on 15 October, 2004, under 37 CFR 1.78(a)(3) to accept an unintentionally delayed claim under 35 U.S.C. § 120 for the benefit of prior-filed Application No. 09/775,128, filed on 1 February, 2001.

The petition is **DISMISSED AS MOOT**.

A petition for acceptance of a claim for late priority under 37 CFR 1.78(a)(3) is only applicable to those applications filed on or after November 29, 2000. Further, the petition is appropriate only after the expiration of the period specified in 37 CFR 1.78(a)(2)(ii). In addition, the petition under 37 CFR 1.78(a)(3) must be accompanied by:

> **(1)** the reference required by 35 U.S.C. § 120 and 37 CFR 1.78(a)(2)(i) of the prior-filed application(s), unless previously submitted;[1]

---

[1] Any nonprovisional application or international application designating the United States of America claiming the benefit of one or more prior-filed copending applications or international applications designating the United States of America must contain or be amended to contain a reference (amendment to the first line of the specification following the title or in an application data sheet (ADS) to each such prior-filed application, identifying it by application number (consisting of the series code and serial number) or international application number and international filing date filing date and indicating the relationship of the applications. Cross references to other related applications may be made when appropriate (*see* § 1.14).

(2) the surcharge set forth in § 1.17(t); and

(3) a statement that the entire delay between the date the claim was due under 37 CFR 1.78(a)(2)(ii) and the date the claim was filed was unintentional. The Commissioner may require additional information where there is a question whether the delay was unintentional.

The instant pending application was filed on 16 December, 2002, and was pending at the time of filing of the instant petition.

The current procedure where a claim for priority under 37 CFR 1.78(a)(3) is not included in the first sentence of the specification or in an ADS but does appear either in the oath or declaration or a transmittal letter filed with the application and the Office notes the claim for priority, no petition will be required to accept a late claim for priority. This is because the application would have been scheduled for publication on the basis of the information concerning the claim submitted elsewhere in the application within the time period set forth in 37 CFR 1.78(a)(2)(ii). However, on the other hand, if the USPTO does not note the claim for priority to the prior-filed application(s) set forth in the oath or declaration or transmittal letter submitted with the application, a petition will be required to accept a late claim for priority under 37 CFR 1.78(a)(3).[2]

In the instant case, the Office recognized the claim for benefit of the prior-filed nonprovisional application, No. 09/775,128, which appeared on the transmittal letter for the instant application. Further, Office PALM records indicate that this application was published on 31 July, 2003, including the claim to benefit of the instant prior-filed nonprovisional application. In view thereof, a petition under 37 CFR 1.78(a)(3) is unnecessary.

The $130.00 submitted with the present petition will be credited to counsel's deposit account, No. 19-1800.

Any questions concerning this decision on petition may be directed to Senior Petitions Attorney Douglas I. Wood at 571.272.3231. All other inquiries concerning either the

---

[2]*Note* MPEP 201.11 (V), page 200-75 (Rev. 1. Feb. 2004 and 66 Federal Register 67087 at 67089 (Dec. 28, 2001), effective December 28, 2001.

examination process or status of the application should be directed to the Technology Center.

The application is being referred to Technology Center AU 1713 for further processing.

Frances Hicks

Frances M. Hicks
Lead Paralegal
Office of Petitions
Office of the Deputy Commissioner
for Patent Examination Policy

UNITED STATES PATENT AND TRADEMARK OFFICE

COMMISSIONER FOR PATENTS
UNITED STATES PATENT AND TRADEMARK OFFICE
P.O. BOX 1450
ALEXANDRIA, VA 22313-1450
www.uspto.gov

JJGJr.: 05-05

Paper No. __

A. Blair Hughes
McDonnell Boehnen
Hulbert & Berghoff
300 S. Wacker Drive/32nd Floor
Chicago IL 60606

COPY MAILED
JUN 0 1 2005
OFFICE OF PETITIONS

In re Application of :
Christensen, et al. :
Application No. 10/320,219 : DECISION
Filed: 16 December, 2002 : ON PETITION
Attorney Docket No.: 98,541-P :

This is a decision on the petition under 37 C.F.R. §1.78(a)(6), filed 3 September, 2003, to accept an unintentionally delayed claim under 35 U.S.C. §119(e) for the benefit of priority to a prior filed provisional application (to wit: Application No. 60/076,198, filed 27 February, 1998).

The petition is **DISMISSED**.

A review of the file record fails to disclose that a claim for the benefit of priority to the above-noted, prior-filed provisional application was made within the time period set forth in 37 C.F.R. §1.78(a)(5)(ii) and further failed to include a proper reference to the above-noted, prior-filed application as required by 37 C.F.R. §1.78(a)(5)(i) and §1.78(a)(5)(iii).

The instant application was filed on 16 December, 2002. Therefore, since this application was filed after November 29, 2000, a petition under 37 C.F.R. §1.78(a)(6) is the appropriate avenue of relief to accept a late claim for the benefit of priority to a prior-filed provisional application.

A petition for acceptance of a claim for late priority under 37 C.F.R. §1.78(a)(6) is only applicable to those applications filed on or after November 29, 2000. Further, the petition is appropriate only

after the expiration of the period specified in 37 C.F.R. §1.78(a)(5)(ii). In addition, the petition under 37 C.F.R. §1.78(a)(6) must be accompanied by:

1. the reference required by 35 U.S.C. §119(e) and 37 C.F.R. §1.78(a)(5)(i) of the prior-filed application, unless previously submitted;[1]
2. the surcharge set forth in §1.17(t); and
3. a statement that the entire delay between the date the claim was due under 37 C.F.R. §1.78(a)(5)(ii) and the date the claim was filed was unintentional. The Commissioner may require additional information where there is a question whether the delay was unintentional.

The petition fails to comply with item (1) above.

Accordingly, before the petition under 37 CFR " 1.78(a)(6) can be granted, a renewed petition under 37 CFR " 1.78(a)(6) and a substitute amendment or application data sheet (ADS)[1] which sets forth the reference to the prior-filed application(s) is required.

Further correspondence with respect to this matter should be addressed as follows:

By mail: Mail Stop Petition
Commissioner for Patents
Post Office Box 1450
Alexandria, Va 22313-1450

By FAX: (703) 872-9306
Attn: Office of Petitions

By hand: Customer Service Window
Randolph Building
401 Dulany Street
Alexandria, VA 22314

[1] *Note* 37 CFR 1.121

Application No. 10/320,219

Inquiries concerning this decision may be directed to John Gillon, Senior Attorney, Office of Petitions at (571) 272-3214.

Frances Hicks
Petitions Examiner
Office of Petitions

[1] Any nonprovisional application or international application designating the United States of America claiming the benefit of one or more prior-filed copending applications or international applications designating the United States of America must contain or be amended to contain a reference (amendment to the first line of the specification following the title or in an application data sheet (ADS) to each such prior-filed application, identifying it by application number (consisting of the series code and serial number) or international application number and international filing date filing date and indicating the relationship of the applications. Cross references to other related applications may be made when appropriate.

UNITED STATES PATENT AND TRADEMARK OFFICE

COMMISSIONER FOR PATENTS
UNITED STATES PATENT AND TRADEMARK OFFICE
P.O. BOX 1450
ALEXANDRIA, VA 22313-1450
www.uspto.gov

DOCKETED

JUN 0 7 2005

DUE DATE: 07/01/05
BY:

UGJr 05-03

Paper No. __

A. Blair Hughes
McDonnell Boehnen
Hulbert & Berghoff
300 S. Wacker Drive/32nd Floor
Chicago IL 60606

COPY MAILED

JUN 0 1 2005

OFFICE OF PETITIONS

In re Application of :
Christensen, et al. :
Application No. 10/320,219 : DECISION
Filed: 16 December, 2002 : ON PETITION
Attorney Docket No.: 98,541-P :

This is a decision on the petition under 37 C.F.R. §1.78(a)(6), filed 3 September, 2003, to accept an unintentionally delayed claim under 35 U.S.C. §119(e) for the benefit of priority to a prior filed provisional application (to wit: Application No. 60/076,198, filed 27 February, 1998).

The petition is **DISMISSED**.

A review of the file record fails to disclose that a claim for the benefit of priority to the above-noted, prior-filed provisional application was made within the time period set forth in 37 C.F.R. §1.78(a)(5)(ii) and further failed to include a proper reference to the above-noted, prior-filed application as required by 37 C.F.R. §1.78(a)(5)(i) and §1.78(a)(5)(iii).

The instant application was filed on 16 December, 2002. Therefore, since this application was filed after November 29, 2000, a petition under 37 C.F.R. §1.78(a)(6) is the appropriate avenue of relief to accept a late claim for the benefit of priority to a prior-filed provisional application.

A petition for acceptance of a claim for late priority under 37 C.F.R. §1.78(a)(6) is only applicable to those applications filed on or after November 29, 2000. Further, the petition is appropriate only

after the expiration of the period specified in 37 C.F.R. §1.78(a)(5)(ii). In addition, the petition under 37 C.F.R. §1.78(a)(6) must be accompanied by:

1. the reference required by 35 U.S.C. §119(e) and 37 C.F.R. §1.78(a)(5)(i) of the prior-filed application, unless previously submitted;[1]
2. the surcharge set forth in §1.17(t); and
3. a statement that the entire delay between the date the claim was due under 37 C.F.R. §1.78(a)(5)(ii) and the date the claim was filed was unintentional. The Commissioner may require additional information where there is a question whether the delay was unintentional.

The petition fails to comply with item (1) above.

Accordingly, before the petition under 37 CFR " 1.78(a)(6) can be granted, a renewed petition under 37 CFR " 1.78(a)(6) and a substitute amendment or application data sheet (ADS)[1] which sets forth the reference to the prior-filed application(s) is required.

Further correspondence with respect to this matter should be addressed as follows:

By mail: Mail Stop Petition
Commissioner for Patents
Post Office Box 1450
Alexandria, Va 22313-1450

By FAX: (703) 872-9306
Attn: Office of Petitions

By hand: Customer Service Window
Randolph Building
401 Dulany Street
Alexandria, VA 22314

[1] *Note* 37 CFR 1.121

Application No. 10/320,219

Inquiries concerning this decision may be directed to John Gillon, Senior Attorney, Office of Petitions at (571) 272-3214.

Frances Hicks
Petitions Examiner
Office of Petitions

[1] Any nonprovisional application or international application designating the United States of America claiming the benefit of one or more prior-filed copending applications or international applications designating the United States of America must contain or be amended to contain a reference (amendment to the first line of the specification following the title or in an application data sheet (ADS) to each such prior-filed application, identifying it by application number (consisting of the series code and serial number) or international application number and international filing date filing date and indicating the relationship of the applications. Cross references to other related applications may be made when appropriate.

UNITED STATES PATENT AND TRADEMARK OFFICE

Commissioner for Patents
United States Patent and Trademark Office
P.O. Box 1450
Alexandria, VA 22313-1450
www.uspto.gov

A. Blair Hughes
McDonnell Boehnen
Hulbert & Berghoff
300 S. Wacker Drive/32nd Floor
Chicago IL 60606

COPY MAILED

MAR 17 2008

OFFICE OF PETITIONS

In re Application of :
Christensen, et al. :
Application No. 10/320,219 : DECISION
Filed: 16 December, 2002 : ON PETITION
Attorney Docket No.: 98,541-P :

This is a decision on the renewed petition under 37 C.F.R. §1.78(a)(3) and (a)(6), filed 29 June, 2005, to accept an unintentionally delayed claim under 35 U.S.C. §120 and §119(e) for the benefit of the prior-filed applications set forth in the concurrently filed amendment.

The petition is **GRANTED.**

A petition for acceptance of a claim for late priority under 37 C.F.R. §1.78(a)(3) and §1.78(a)(6) is only applicable to those applications filed on or after November 29, 2000. Further, the petition is appropriate only after the expiration of the period specified in 37 C.F.R. §1.78(a)(2)(ii) and §1.78(a)(5)(ii). In addition, the petition under 37 C.F.R. §1.78(a)(3) and §1.78(a)(6) must be accompanied by:

(1) the reference required by 35 U.S.C. §120 and §119(e) and 37 C.F.R. §1.78(a)(2)(i) and §1.78(a)(5)(i) of the prior-filed application, unless previously submitted;

(2) the surcharge set forth in §1.17(t); and

(3) a statement that the entire delay between the date the claim was due under 37 C.F.R. §1.78(a)(2)(ii) and §1.78(a)(5)(ii) and the date the claim was filed was unintentional. The Director may require

additional information where there is a question whether the delay was unintentional.

Additionally, the instant nonprovisional application must be pending at the time of filing of the reference to the prior-filed provisional application as required by 37 C.F.R. 1.78(a)(5)(ii). Further, the nonprovisional application claiming the benefit of the prior-filed provisional application must have been filed within twelve months of the filing date of the prior-filed provisional application.

All of the requirements above having been satisfied, the late claim for benefit of priority under 35 U.S.C. §§ 120 and 119(e) is accepted as being unintentionally delayed.

The granting of the petition to accept the delayed benefit claim to the prior-filed applications under 37 C.F.R. §§ 1.78(a)(3) and 1.78(a)(6) should not be construed as meaning that this application is entitled to the benefit of the filing date of the prior-filed applications. In order for this application to be entitled to the benefit of the prior-filed applications, all other requirements under 35 U.S.C. §§120 and 1.78(a)(1) and (a)(2) and under 35 U.S.C. §119(e) and 37 C.F.R. 1.78(a)(4) and (a)(5) must be met. Similarly, the fact that the corrected Filing Receipt accompanying this decision on petition includes the prior-filed applications should not be construed as meaning that applicant is entitled to the claim for benefit of priority to the prior-filed applications noted thereon. Accordingly, the examiner will, in due course, consider this benefit claim and determine whether the application is entitled to the benefit of the earlier filing date.

Any questions concerning this matter may be directed to John Gillon at (571) 272-3214. All other inquiries concerning either the examination procedures or status of the application should be directed to the Technology Center.

This application is being forwarded to Technology Center AU 1743 for consideration by the examiner of the claim under 35 U.S.C. § §120 and 119(e) of the prior-filed nonprovisional and provisional applications.

Anthony Knight
Supervisor
Office of Petitions

UNITED STATES PATENT AND TRADEMARK OFFICE

COMMISSIONER FOR PATENTS
UNITED STATES PATENT AND TRADEMARK OFFICE
P.O. BOX 1450
ALEXANDRIA, VA 22313-1450
www.uspto.gov

KEITH FRANTZ
401 WEST STATE STREET
SUITE 200
ROCKFORD, IL 61101

COPY MAILED

JUL 1 8 2005

OFFICE OF PETITIONS

In re Application of :
Russell L. Caldwell :
Application No. 10/320,228 : ON PETITION
Filed: December 16, 2002 :
Attorney Docket No. None :

This is a decision in response to the petition, filed May 26, 2005, to revive the above-identified application under the provisions of 37 CFR 1.137(b).

The application became abandoned for a failure to reply in a timely manner to the non-final Office action mailed September 2, 2004. A Notice of Abandonment was mailed on March 31, 2005. In response, on May 26, 2005, the present petition was filed.

The petition is found to comply with the requirements of 37 CFR 1.137(b). Accordingly, the petition is **GRANTED**.

The application is being referred to Technology Center AU 1761 for consideration of the amendment filed May 26, 2005.

Telephone inquiries concerning this decision should be directed to the undersigned at (571) 272-3204. Inquiries relating to further prosecution should be directed to the Technology Center.

Sherry D. Brinkley
Petitions Examiner
Office of Petitions
Office of the Deputy Commissioner
for Patent Examination Policy

UNITED STATES PATENT AND TRADEMARK OFFICE

Commissioner for Patents
United States Patent and Trademark Office
P.O. Box 1450
Alexandria, VA 22313-1450
www.uspto.gov

KEITH FRANTZ
401 WEST STATE STREET
SUITE 200
ROCKFORD, IL 61101

COPY MAILED

JUL 05 2007

OFFICE OF PETITIONS

In re Application of
Caldwell
Application No. 10/320,228
Filed: December 16, 2002
Attorney Docket No. None

ON PETITION

This is a decision in response to the petition, filed March 9, 2007, to revive the above-identified application under the provisions of 37 CFR 1.137(b).

The petition is **GRANTED**.

The application became abandoned for a failure to reply in a timely manner to a non-final Office action mailed September 7, 2005. A Notice of Abandonment was mailed on April 13, 2006. In response, on March 9, 2007, the present petition was filed.

The petition satisfies the conditions for revival pursuant to the provisions of 37 CFR 1.137(b) in that petitioner has supplied (1) the reply in the form of an amendment; (2) the petition fee of $750; and (3) an adequate statement of unintentional delay.

The application is being referred to Technology Center AU 1761 for consideration of the amendment filed March 9, 2007.

Telephone inquiries concerning this decision should be directed to the undersigned at (571) 272-3204. Inquiries relating to further prosecution should be directed to the Technology Center.

Sherry D. Brinkley
Petitions Examiner
Office of Petitions

UNITED STATES PATENT AND TRADEMARK OFFICE

Commissioner for Patents
United States Patent and Trademark Office
P.O. Box 1450
Alexandria, VA 22313-1450
www.uspto.gov

KEITH FRANTZ
401 WEST STATE STREET
SUITE 200
ROCKFORD IL 61101

MAILED

AUG 10 2009

OFFICE OF PETITIONS

In re Application of :
Caldwell L. Russell :
Application No. 10/320,228 : ON PETITION
Filed: December 16, 2002 :
:

This is a decision on the petition under the unintentional provisions of 37 CFR 1.137(b), filed June 15, 2009, to revive the above-identified application.

The petition is **GRANTED**.

The application became abandoned for failure to timely file a reply within the meaning of 37 CFR 1.113 to the final Office action of November 1, 2007. The proposed reply required for consideration of a petition to revive must be a Notice of Appeal (and appeal fee required by 37 CFR 41.20(b)(2), an amendment that *prima facie* places the application in condition for allowance, a Request for Continued Examination and submission (37 CFR 1.114), or the filing of a continuing application under 37 CFR 1.53(b). See MPEP 711.03(c)(III)(A)(2). No extensions of time pursuant to the provisions of 37 CFR 1.136(a) was obtained. Accordingly, the date of abandonment of this application is February 2, 2008. The Notice of Abandonment was mailed May 12, 2008.

The petition satisfies the requirements of 37 CFR 1.137(b) in that petitioner has supplied (1) the reply in the form of a Request for Continued Examination (RCE) and fee of $405, and the submission required by 37 CFR 1.114; (2) the petition fee of $810; and (3) a proper statement of unintentional delay.

Telephone inquiries concerning this decision should be directed to the undersigned at (571) 272-2991.

This application is being referred to Technology Center AU 1794 for processing of the RCE and for appropriate action by the Examiner in the normal course of business on the amendment submitted in accordance with 37 CFR 1.114.

Terri Williams
Petitions Examiner
Office of Petitions

UNITED STATES PATENT AND TRADEMARK OFFICE

Commissioner for Patents
United States Patent and Trademark Office
P.O. Box 1450
Alexandria, VA 22313-1450
www.uspto.gov

BAKER & BOTTS L.L.P.
30 ROCKEFELLER PLAZA
44TH FLOOR
NEW YORK NY 10112-4498

COPY MAILED

APR 0 3 2007

OFFICE OF PETITIONS

In re Application of	:	
Ohtomo et al.	:	
Application No. 10/320,235	:	ON PETITION
Filed: December 16, 2002	:	
Attorney Docket No. A35609	:	

This is a decision on the petition under 37 C.F.R. § 1.137(b), filed January 16, 2007, to revive the above-identified application.

The petition is **GRANTED.**

The petition satisfies the conditions for revival pursuant to the provisions of 37 CFR 1.137(b) in that (1) the reply in the form of the Issue Fee Transmittal with payment of the issue and publication fees; (2) the petition fee; and (3) the required statement of unintentional delay have been received. Accordingly, the response has been accepted as having been unintentionally delayed.

This matter is being referred to the Publishing Division for processing into a patent.

Telephone inquiries regarding this decision should be directed to the undersigned at (571) 272-3206.

Liana Walsh
Petitions Examiner
Office of Petitions

UNITED STATES PATENT AND TRADEMARK OFFICE

Commissioner for Patents
United States Patent and Trademark Office
P.O. Box 1450
Alexandria, VA 22313-1450
www.uspto.gov

HENRY I. SCHANZER, ESQ.
29 BROOKFALL RD.
EDISON, NJ 08817

COPY MAILED

JAN 0 9 2007

OFFICE OF PETITIONS

In re Application of	:	
Han et al.	:	
Application No. 10/320,239	:	ON PETITION
Filed: December 16, 2002	:	
Attorney Docket No. ZEBOX 6	:	

This is a decision on the petition under 37 C.F.R. § 1.137(b), filed June 26, 2006, to revive the above-identified application.

The petition is **GRANTED.**

The petition satisfies the conditions for revival pursuant to the provisions of 37 CFR 1.137(b) in that (1) the reply in the form of a Request for Continued Examination (RCE and an Amendment; (2) the petition fee; and (3) the required statement of unintentional delay have been received. Accordingly, the response has been accepted as having been unintentionally delayed.

An extension of time under 37 CFR 1.136 must be filed prior to the expiration of the maximum extendable period for reply. See In re Application of S., 8 USPQ2d 1630, 1631 (Comm'r Pats. 1988). Accordingly, since the $1080.00 extension of time fee submitted with the petition on June 26, 2006 was subsequent to the maximum extendable period for reply, this fee is unnecessary and will be credited to petitioner's deposit account as authorized.

This matter is being referred to Technology Center 2800 for processing of the Request for Continued Examination under 37 CFR 1.114 filed with the instant petition.

Telephone inquiries regarding this decision should be directed to the undersigned at (571) 272-3206.

Liana Walsh
Petitions Examiner
Office of Petitions

UNITED STATES PATENT AND TRADEMARK OFFICE

Commissioner for Patents
United States Patent and Trademark Office
P.O. Box 1450
Alexandria, VA 22313-1450
www.uspto.gov

David Aker
23 Southern Road
Hartsdale, NY 10530

COPY MAILED

MAY 15 2008

OFFICE OF PETITIONS

In re Application of :
Chatschik Bisdikian et al. :
Application No. 10/320,262 : DECISION ON PETITION
Filed: December 16, 2002 :
Attorney Docket No. YOR920020345US1 :

This is a decision on the petition under the unintentional provisions of 37 CFR 1.137(b), filed February 22, 2008, to revive the above-identified application.

The petition is **GRANTED**.

The application became abandoned for failure to reply in a timely manner to the non-final Office action mailed April 27, 2007, which set a shortened statutory period for reply of three (3) months. No extensions of time under the provisions of 37 CFR 1.136(a) were obtained. Accordingly, the application became abandoned on July 28, 2007. A Notice of Abandonment was mailed on November 15, 2007.

The petition satisfies the requirements of 37 CFR 1.137(b) in that petitioner has supplied (1) the reply in the form of an amendment after non-final, (2) the petition fee of $1540, and (3) a proper statement of unintentional delay.

Telephone inquiries concerning this decision should be directed to Kimberly Inabinet at (571) 272-4618.

This application is being referred to Technology Center AU 2623 for appropriate action by the Examiner in the normal course of business on the reply received February 22, 2008.

Andrea Smith
Petitions Examiner
Office of Petitions

UNITED STATES PATENT AND TRADEMARK OFFICE

Commissioner for Patents
United States Patent and Trademark Office
P.O. Box 1450
Alexandria, VA 22313-1450
www.uspto.gov

DAVIDSON, DAVIDSON & KAPPEL LLC
485 SEVENTH AVENUE, 14TH FLOOR
NEW YORK, NY 10018

COPY MAILED

JUL 0 2 2004

OFFICE OF PETITIONS

In re Application of
Ronald Henry Boucher
Application No. 10/320,273
Filed: December 16, 2002
Attorney Docket No. 600.1245

: DECISION GRANTING PETITION
: UNDER 37 CFR 313(c)(2)

This is a decision on the petition, filed July 1, 2004, under 37 CFR 1.313(c)(2) to withdraw the above-identified application from issue after payment of the issue fee.

The petition is **GRANTED**.

The above-identified application is withdrawn from issue for consideration of a submission under 37 CFR 1.114 (request for continued examination). See 37 CFR 1.313(c)(2).

Petitioner is advised that the issue fee paid on June 8, 2004 in the above-identified application cannot be refunded. If, however, the above-identified application is again allowed, petitioner may request that it be applied towards the issue fee required by the new Notice of Allowance.[1]

Telephone inquiries should be directed to the undersigned at (703) 305-8680.

This matter is being referred to Technology Center AU 3654 for processing of the request for continued examination under 37 CFR 1.114 and for consideration of the concurrently filed Information Disclosure Statement.

Frances Hicks
Petitions Examiner
Office of Petitions
Office of the Deputy Commissioner
for Patent Examination Policy

---

[1] The request to apply the issue fee to the new Notice may be satisfied by completing and returning the new Issue Fee Transmittal Form PTOL-85(b), which includes the following language thereon: "Commissioner for Patents is requested to apply the Issue Fee and Publication Fee (if any) or re-apply any previously paid issue fee to the application identified above." Petitioner is advised that, whether a fee is indicated as being due or not, the Issue Fee Transmittal Form **must** be completed and timely submitted to avoid abandonment. Note the language in bold text on the first page of the Notice of Allowance and Fee(s) Due (PTOL-85).

UNITED STATES PATENT AND TRADEMARK OFFICE

Commissioner for Patents
United States Patent and Trademark Office
P.O. Box 1450
Alexandria, VA 22313-1450
www.uspto.gov

DAVIDSON DAVIDSON & KAPPEL
485 SEVENTH AVENUE, 14TH FLOOR
NEW YORK, NY 10018

COPY MAILED

JAN 0 3 2005

OFFICE OF PETITIONS

In re Application of	:	
Ronald Henry Boucher	:	
Application No. 10/320,273	:	ON PETITION
Filed: December 16, 2002	:	
Attorney Docket No. 600.1245	:	

This is a decision on the petition under 37 CFR 1.137(b), filed November 12, 2004, to revive the above-identified application.

The petition is **GRANTED**.

The above-identified application became abandoned for failure to submit the issue fee in a timely manner in reply to the Notice of Allowance mailed July 28, 2004, which set a statutory period for reply of three (3) months. Accordingly, the above-identified application became abandoned on October 29, 2004.

Telephone inquiries concerning this decision should be directed to Wan Laymon at (571) 272-3220.

This matter is being referred to the Publishing Division.

Wan Laymon
Petitions Examiner
Office of Petitions
Office of the Deputy Commissioner
for Patent Examination Policy

UNITED STATES PATENT AND TRADEMARK OFFICE

Commissioner for Patents
United States Patent and Trademark Office
P.O. Box 1450
Alexandria, VA 22313-1450
www.uspto.gov

Paper No. 7

DAVID W. HIGHET, VP AND CHIEF IP COUNSEL
BECTON, DICKINSON AND COMPANY
1 BECTON DRIVE, MC 110
FRANKLIN LAKES, NJ 07417-1880

COPY MAILED

JUL 1 2 2004

OFFICE OF PETITIONS

In re Application of :
Glade H. Howell :
Application No. 10/320,274 : DECISION ON PETITION
Filed: December 16, 2002 : UNDER 37 CFR 1.78(a)(3)
Attorney Docket No. P-3855C1C1 :

This is a decision on the petition under 37 CFR 1.78(a)(3), filed December 17, 2003, to accept an unintentionally delayed claim under 35 U.S.C. § 120 for the benefit of priority to the prior-filed nonprovisional application set forth in the amendment filed concurrently with the instant petition.

The petition is **GRANTED**.

A petition for acceptance of a claim for late priority under 37 CFR 1.78(a)(3) is only applicable to those applications filed on or after November 29, 2000. Further, the petition is appropriate only after the expiration of the period specified in 37 CFR 1.78(a)(2)(ii). In addition, the petition under 37 CFR 1.78(a)(3) must be accompanied by:

> **(1)** the reference required by 35 U.S.C. § 120 and 37 CFR 1.78(a)(2)(i) of the prior-filed application, unless previously submitted;[1]
> **(2)** the surcharge set forth in § 1.17(t); and
> **(3)** a statement that the entire delay between the date the claim was due under 37 CFR 1.78(a)(2)(ii) and the date the claim was filed was unintentional. The Commissioner may require additional information where there is a question whether the delay was unintentional.

---

[1] Any nonprovisional application or international application designating the United States of America claiming the benefit of one or more prior-filed copending applications or international applications designating the United States of America must contain or be amended to contain a reference (amendment to the first line of the specification following the title or in an application data sheet (ADS) to each such prior-filed application, identifying it by application number (consisting of the series code and serial number) or international application number and international filing date filing date and indicating the relationship of the applications. Cross references to other related applications may be made when appropriate (*see* § 1.14).

The instant pending application was filed on December 16, 2002, and was pending at the time of filing of the instant petition. A reference to the prior-filed nonprovisional application has been included in an amendment to the first sentence of the specification following the title, as required by 37 CFR 1.78(a)(2)(iii).

The instant nonprovisional application was filed after November 29, 2000, and the claim herein for the benefit of priority to the prior-filed nonprovisional application is submitted after expiration of the period specified in 37 CFR 1.78(a)(2)(ii). Also, the reference to the prior-filed nonprovisional application was submitted during the pendency of the instant nonprovisional application, for which the claim for benefit of priority is sought. *See* 35 U.S.C. § 120. Accordingly, having found that the instant petition for acceptance of an unintentionally delayed claim for the benefit of priority under 35 U.S.C. § 120 to the prior-filed nonprovisional application satisfies the conditions of 37 CFR 1.78(a)(3), the petition is granted.

The granting of the petition to accept the delayed benefit claim to the prior-filed application under 37 CFR 1.78(a)(3) should not be construed as meaning that the instant application is entitled to the benefit of the prior-filed application. In order for the instant application to be entitled to the benefit of the prior-filed application, all other requirements under 35 U.S.C. § 120 and 37 CFR 1.78(a)(1) and (a)(2) must be met. Similarly, the fact that the corrected Filing Receipt accompanying this decision on petition includes the prior-filed application should not be construed as meaning that applicant is entitled to the claim for benefit of priority to the prior-filed application noted thereon. Accordingly, the examiner will, in due course, consider this benefit claim and determine whether the instant application is entitled to the benefit of the earlier filing date.

A corrected Filing Receipt, which includes the priority claim to the prior-filed nonprovisional application, accompanies this decision on petition.

Any inquiries concerning this decision may be directed to the undersigned at (703) 305-8859.

This application is being forwarded to Technology Center Art Unit 3763 for consideration by the examiner of applicant's entitlement to claim benefit of priority under 35 U.S.C. § 120 to prior-filed nonprovisional Application No. 10/320,274.

Karen Creasy

Karen Creasy
Petitions Examiner
Office of Petitions
Office of the Deputy Commissioner
for Patent Examination Policy

ATTACHMENT: Corrected Filing Receipt

PTO/SB/66 (03-09)
Approved for use through 03/31/2012. OMB 0651-0016
U.S. Patent and Trademark Office: U.S. DEPARTMENT OF COMMERCE
Under the Paperwork Reduction Act of 1995, no persons are required to respond to a collection of information unless it displays valid OMB control number.

PETITION TO ACCEPT UNINTENTIONALLY DELAYED PAYMENT OF MAINTENANCE FEE IN AN EXPIRED PATENT (37 CFR 1.378(c))

Patent Number	Issue Date (YYYY-MM-DD)	Application Number	Filing Date (YYYY-MM-DD)	Docket Number (if applicable)
7,049,953	2006-05-23	10/320,280	2002-12-16	07-0175

CAUTION: Maintenance fee (and surcharge, if any) payment must correctly identify: (1) the patent number and (2) the application number of the actual U.S. application leading to issuance of that patent to ensure the fee(s) is/are associated with the correct patent. 37 CFR 1.366(c) and (d).

SMALL ENTITY

☐ Patentee claims, or has previously claimed, small entity status. See 37 CFR 1.27.

LOSS OF ENTITLEMENT TO SMALL ENTITY STATUS

☐ Patentee is no longer entitled to small entity status. See 37 CFR 1.27(g)

NOT Small Entity			Small Entity		
	Fee	Code		Fee	Code
◉	3 ½ year	(1551)	○	3 ½ year	(2551)
○	7 ½ year	(1552)	○	7 ½ year	(2552)
○	11 ½ year	(1553)	○	11 ½ year	(2553)

SURCHARGE

The surcharge required by 37 CFR 1.20(i)(2) (Fee Code 1558) must be paid as a condition of accepting unintentionally delayed payment of the maintenance fee.

MAINTENANCE FEE (37 CFR 1.20(e)-(g))

The appropriate maintenance fee must be submitted with this petition.

STATEMENT

THE UNDERSIGNED CERTIFIES THAT THE DELAY IN PAYMENT OF THE MAINTENANCE FEE TO THIS PATENT WAS UNINTENTIONAL

PETITIONER(S) REQUEST THAT THE DELAYED PAYMENT OF THE MAINTENANCE FEE BE ACCEPTED AND THE PATENT REINSTATED

THIS PORTION MUST BE COMPLETED BY THE SIGNATORY OR SIGNATORIES

37 CFR 1.378(d) states: "Any petition under this section must be signed by an attorney or agent registered to practice before the Patent and Trademark Office, or by the patentee, the assignee, or other party in interest."

I certify, in accordance with 37 CFR 1.4(d)(4) that I am

◉ An attorney or agent registered to practice before the Patent and Trademark Office

○ A sole patentee

○ A joint patentee; I certify that I am authorized to sign this submission on behalf of all the other patentees.

○ A joint patentee; all of whom are signing this e-petition

○ The assignee of record of the entire interest

Patent Practitioner			
A signature of the applicant or representative is required in accordance with 37 CFR 1.33 and 10.18. Please see 37 CFR 1.4(d) for the form of the signature			
Signature	/Jeffrey d Hunt/	Date (YYYY-MM-DD)	2010-07-16
Name	Jeffrey D Hunt	Registration Number	38189

This collection of information is required by 37 CFR 1.378(c). The information is required to obtain or retain a benefit by the public which is to file (and by the USPTO to process) an application. Confidentiality is governed by 35 U.S.C. 122 and 37 CFR 1.11 and 1.14. This collection is estimated to take 1 hour to complete, including gathering, preparing, and submitting the completed application form to the USPTO. Time will vary depending upon the individual case. Any comments on the amount of time you require to complete this form and/ or suggestions for reducing this burden, should be sent to the Chief Information Officer, U.S. Patent and Trademark Office, U.S. Department of Commerce, P.O. Box 1450, Alexandria, VA 22313-1450. DO NOT SEND FEES OR COMPLETED FORMS TO THIS ADDRESS. **This form can only be used when in conjunction with EFS-Web. If this form is mailed to the USPTO, it may cause delays in reinstating the patent.**

Privacy Act Statement

The Privacy Act of 1974 (P.L. 93-579) requires that you be given certain information in connection with your submission of the attached form related to a patent application or patent. Accordingly, pursuant to the requirements of the Act, please be advised that: (1) the general authority for the collection of this information is 35 U.S.C. 2(b)(2); (2) furnishing of the information solicited is voluntary; and (3) the principal purpose for which the information is used by the U.S. Patent and Trademark Office is to process and/or examine your submission related to a patent application or patent. If you do not furnish the requested information, the U.S. Patent and Trademark Office may not be able to process and/or examine your submission, which may result in termination of proceedings or abandonment of the application or expiration of the patent.

The information provided by you in this form will be subject to the following routine uses:

1. The information on this form will be treated confidentially to the extent allowed under the Freedom of Information Act (5 U.S.C. 552) and the Privacy Act (5 U.S.C. 552a). Records from this system of records may be disclosed to the Department of Justice to determine whether the Freedom of Information Act requires disclosure of these records.

2. A record from this system of records may be disclosed, as a routine use, in the course of presenting evidence to a court, magistrate, or administrative tribunal, including disclosures to opposing counsel in the course of settlement negotiations.

3. A record in this system of records may be disclosed, as a routine use, to a Member of Congress submitting a request involving an individual, to whom the record pertains, when the individual has requested assistance from the Member with respect to the subject matter of the record.

4. A record in this system of records may be disclosed, as a routine use, to a contractor of the Agency having need for the information in order to perform a contract. Recipients of information shall be required to comply with the requirements of the Privacy Act of 1974, as amended, pursuant to 5 U.S.C. 552a(m).

5. A record related to an International Application filed under the Patent Cooperation Treaty in this system of records may be disclosed, as a routine use, to the International Bureau of the World Intellectual Property Organization, pursuant to the Patent Cooperation Treaty.

6. A record in this system of records may be disclosed, as a routine use, to another federal agency for purposes of National Security review (35 U.S.C. 181) and for review pursuant to the Atomic Energy Act (42 U.S.C. 218(c)).

7. A record from this system of records may be disclosed, as a routine use, to the Administrator, General Services, or his/her designee, during an inspection of records conducted by GSA as part of that agency's responsibility to recommend improvements in records management practices and programs, under authority of 44 U.S.C. 2904 and 2906. Such disclosure shall be made in accordance with the GSA regulations governing inspection of records for this purpose, and any other relevant (i.e., GSA or Commerce) directive. Such disclosure shall not be used to make determinations about individuals.

8. A record from this system of records may be disclosed, as a routine use, to the public after either publication of the application pursuant to 35 U.S.C. 122(b) or issuance of a patent pursuant to 35 U.S.C. 151. Further, a record may be disclosed, subject to the limitations of 37 CFR 1.14, as a routine use, to the public if the record was filed in an application which became abandoned or in which the proceedings were terminated and which application is referenced by either a published application, an application open to public inspections or an issued patent.

9. A record from this system of records may be disclosed, as a routine use, to a Federal, State, or local law enforcement agency, if the USPTO becomes aware of a violation or potential violation of law or regulation.

UNITED STATES PATENT AND TRADEMARK OFFICE

Commissioner for Patents
United States Patent and Trademark Office
P.O. Box 1450
Alexandria, VA 22313-1450
www.uspto.gov

In re Patent No. 7049953
Issue Date: May 23,2006
Application No. 10320280
Filed: December 16,2002
Attorney Docket No. 07-0175

:
:DECISION GRANTING PETITION
:UNDER 37 CFR 1.378(c)
:

This is a decision on the electronic petition, filed July 16,2010 ,under 37 CFR 1.378(c) to accept the unintentionally delayed payment of the 3.5 year maintenance fee for the above-identified patent.

The petition is **GRANTED**.

The maintenance fee is accepted, and the above-identified patent reinstated as of July 16,2010 . This decision also constitutes notice that the fee has been accepted. An electronic copy of the petition and this decision has been created as an entry in the Image File Wrapper. Nevertheless, petitioner should print and retain an independent copy.

Telephone inquiries related to this electronic decision should be directed to the Electronic Business Center at 1-866-217-9197.

SPE RESPONSE FOR CERTIFICATE OF CORRECTION

Paper No.: _____

DATE : 11-14-06

TO SPE OF : ART UNIT 1652

SUBJECT : Request for Certificate of Correction for Appl. No.: 10/320300 Patent No.: 7087418

Please respond to this request for a certificate of correction within 7 days.

Please review the requested changes/corrections as shown in the **COCIN** document(s) in the IFW application image. No new matter should be introduced, nor should the scope or meaning of the claims be changed.

Check claims

Please complete the response (see below) and forward the completed response to scanning using document code **COCX**.

Certificates of Correction Branch

703-308-9390 ext. 117

Thank You For Your Assistance

The request for issuing the above-identified correction(s) is hereby:

Note your decision on the appropriate box.

☑ Approved	All changes apply.
☐ Approved in Part	Specify below which changes do not apply.
☐ Denied	State the reasons for denial below.

Comments: _____

SPE

1652

Art Unit

UNITED STATES PATENT AND TRADEMARK OFFICE

Commissioner for Patents
United States Patent and Trademark Office
P.O. Box 1450
Alexandria, VA 22313-1450
www.uspto.gov

In re Application of:
Steven L. Goldberg
Serial No. 10/320,300
Filed: December 16, 2002
Title: PICHIA PASTORIS FORMATE DEHYDROGENASE AND USES THEREFOR

This is a decision on the petition to request inventorship under 37 C.F.R. § 1.48(B) filed July 27, 2005.

The petition has been reviewed and it is found to be in compliance with the requirements as set forth in MPEP §1481. Accordingly, the petition is granted.

Petition GRANTED.

Ponnathapura N. Achutamurthy
Supervisory Patent Examiner
Art Unit 1652

Audrey F. Sher
Bristol-Myers Squibb Company
Patent Department
P. O. Box 4000
Princeton, NJ 08543-4000

UNITED STATES PATENT AND TRADEMARK OFFICE

Commissioner for Patents
United States Patent and Trademark Office
P.O. Box 1450
Alexandria, VA 22313-1450
www.uspto.gov

Fax Cover Sheet

Date: August 2, 2007

To: Ennis Young (Publications)	**From:** Ponnathapura N. Achutamurthy
Application/Control Number: 10/320,300	**Art Unit:** 1652
Fax No.: (571) 270-9946	**Phone No.:** 571-272-0928
Voice No.:	**Return Fax No.:** 571-273-0928
Re: COC	**CC:**

X ☐ **Urgent** ☐ **For Review** ☐ **For Comment** ☐ **For Reply** ☒ **Per Your Request**

Comment

Petition Grant letter and PTO-306.

Number of pages 3 including this page

STATEMENT OF CONFIDENTIALITY

This facsimile transmission is an Official U.S. Government document which may contain information which is privileged and confidential. It is intended only for use of the recipient named above. If you are not the intended recipient, any dissemination, distribution or copying of this document is strictly prohibited. If this document is received in error, you are requested to immediately notify the sender at the above indicated telephone number and return the entire document in an envelope addressed to:

Commissioner for Patents
P.O. Box 1450
Alexandria, VA 22313-1450

PTO/SB/66 (03-09)
Approved for use through 03/31/2012. OMB 0651-0016
U.S. Patent and Trademark Office: U.S. DEPARTMENT OF COMMERCE
Under the Paperwork Reduction Act of 1995, no persons are required to respond to a collection of information unless it displays valid OMB control number.

PETITION TO ACCEPT UNINTENTIONALLY DELAYED PAYMENT OF MAINTENANCE FEE IN AN EXPIRED PATENT (37 CFR 1.378(c))

Patent Number	Issue Date (YYYY-MM-DD)	Application Number	Filing Date (YYYY-MM-DD)	Docket Number (if applicable)
6797705	2004-09-28	10320309	2002-12-16	27512-3002US01

CAUTION: Maintenance fee (and surcharge, if any) payment must correctly identify: (1) the patent number and (2) the application number of the actual U.S. application leading to issuance of that patent to ensure the fee(s) is/are associated with the correct patent. 37 CFR 1.366(c) and (d).

SMALL ENTITY

☒ Patentee claims, or has previously claimed, small entity status. See 37 CFR 1.27.

LOSS OF ENTITLEMENT TO SMALL ENTITY STATUS

☐ Patentee is no longer entitled to small entity status. See 37 CFR 1.27(g)

NOT Small Entity			Small Entity		
	Fee	Code		Fee	Code
○	3 ½ year	(1551)	◉	3 ½ year	(2551)
○	7 ½ year	(1552)	○	7 ½ year	(2552)
○	11 ½ year	(1553)	○	11 ½ year	(2553)

SURCHARGE

The surcharge required by 37 CFR 1.20(i)(2) (Fee Code 1558) must be paid as a condition of accepting unintentionally delayed payment of the maintenance fee.

MAINTENANCE FEE (37 CFR 1.20(e)-(g))

The appropriate maintenance fee must be submitted with this petition.

STATEMENT

THE UNDERSIGNED CERTIFIES THAT THE DELAY IN PAYMENT OF THE MAINTENANCE FEE TO THIS PATENT WAS UNINTENTIONAL

PETITIONER(S) REQUEST THAT THE DELAYED PAYMENT OF THE MAINTENANCE FEE BE ACCEPTED AND THE PATENT REINSTATED

THIS PORTION MUST BE COMPLETED BY THE SIGNATORY OR SIGNATORIES

37 CFR 1.378(d) states: "Any petition under this section must be signed by an attorney or agent registered to practice before the Patent and Trademark Office, or by the patentee, the assignee, or other party in interest."

I certify, in accordance with 37 CFR 1.4(d)(4) that I am

◉ An attorney or agent registered to practice before the Patent and Trademark Office

○ A sole patentee

○ A joint patentee; I certify that I am authorized to sign this submission on behalf of all the other patentees.

○ A joint patentee; all of whom are signing this e-petition

○ The assignee of record of the entire interest

Patent Practitioner			
A signature of the applicant or representative is required in accordance with 37 CFR 1.33 and 10.18. Please see 37 CFR 1.4(d) for the form of the signature			
Signature	/Brick G. Power/	Date (YYYY-MM-DD)	2010-06-23
Name	Brick G. Power	Registration Number	38581

This collection of information is required by 37 CFR 1.378(c). The information is required to obtain or retain a benefit by the public which is to file (and by the USPTO to process) an application. Confidentiality is governed by 35 U.S.C. 122 and 37 CFR 1.11 and 1.14. This collection is estimated to take 1 hour to complete, including gathering, preparing, and submitting the completed application form to the USPTO. Time will vary depending upon the individual case. Any comments on the amount of time you require to complete this form and/ or suggestions for reducing this burden, should be sent to the Chief Information Officer, U.S. Patent and Trademark Office, U.S. Department of Commerce, P.O. Box 1450, Alexandria, VA 22313-1450. DO NOT SEND FEES OR COMPLETED FORMS TO THIS ADDRESS. **This form can only be used when in conjunction with EFS-Web. If this form is mailed to the USPTO, it may cause delays in reinstating the patent.**

Privacy Act Statement

The Privacy Act of 1974 (P.L. 93-579) requires that you be given certain information in connection with your submission of the attached form related to a patent application or patent. Accordingly, pursuant to the requirements of the Act, please be advised that: (1) the general authority for the collection of this information is 35 U.S.C. 2(b)(2); (2) furnishing of the information solicited is voluntary; and (3) the principal purpose for which the information is used by the U.S. Patent and Trademark Office is to process and/or examine your submission related to a patent application or patent. If you do not furnish the requested information, the U.S. Patent and Trademark Office may not be able to process and/or examine your submission, which may result in termination of proceedings or abandonment of the application or expiration of the patent.

The information provided by you in this form will be subject to the following routine uses:

1. The information on this form will be treated confidentially to the extent allowed under the Freedom of Information Act (5 U.S.C. 552) and the Privacy Act (5 U.S.C. 552a). Records from this system of records may be disclosed to the Department of Justice to determine whether the Freedom of Information Act requires disclosure of these records.

2. A record from this system of records may be disclosed, as a routine use, in the course of presenting evidence to a court, magistrate, or administrative tribunal, including disclosures to opposing counsel in the course of settlement negotiations.

3. A record in this system of records may be disclosed, as a routine use, to a Member of Congress submitting a request involving an individual, to whom the record pertains, when the individual has requested assistance from the Member with respect to the subject matter of the record.

4. A record in this system of records may be disclosed, as a routine use, to a contractor of the Agency having need for the information in order to perform a contract. Recipients of information shall be required to comply with the requirements of the Privacy Act of 1974, as amended, pursuant to 5 U.S.C. 552a(m).

5. A record related to an International Application filed under the Patent Cooperation Treaty in this system of records may be disclosed, as a routine use, to the International Bureau of the World Intellectual Property Organization, pursuant to the Patent Cooperation Treaty.

6. A record in this system of records may be disclosed, as a routine use, to another federal agency for purposes of National Security review (35 U.S.C. 181) and for review pursuant to the Atomic Energy Act (42 U.S.C. 218(c)).

7. A record from this system of records may be disclosed, as a routine use, to the Administrator, General Services, or his/her designee, during an inspection of records conducted by GSA as part of that agency's responsibility to recommend improvements in records management practices and programs, under authority of 44 U.S.C. 2904 and 2906. Such disclosure shall be made in accordance with the GSA regulations governing inspection of records for this purpose, and any other relevant (i.e., GSA or Commerce) directive. Such disclosure shall not be used to make determinations about individuals.

8. A record from this system of records may be disclosed, as a routine use, to the public after either publication of the application pursuant to 35 U.S.C. 122(b) or issuance of a patent pursuant to 35 U.S.C. 151. Further, a record may be disclosed, subject to the limitations of 37 CFR 1.14, as a routine use, to the public if the record was filed in an application which became abandoned or in which the proceedings were terminated and which application is referenced by either a published application, an application open to public inspections or an issued patent.

9. A record from this system of records may be disclosed, as a routine use, to a Federal, State, or local law enforcement agency, if the USPTO becomes aware of a violation or potential violation of law or regulation.

UNITED STATES PATENT AND TRADEMARK OFFICE

Commissioner for Patents
United States Patent and Trademark Office
P.O. Box 1450
Alexandria, VA 22313-1450
www.uspto.gov

In re Patent No. 6797705
Issue Date: September 28,2004
Application No. 10320309
Filed: December 16,2002
Attorney Docket No. ENDO-004

:
:DECISION GRANTING PETITION
:UNDER 37 CFR 1.378(c)
:

This is a decision on the electronic petition, filed June 23,2010 ,under 37 CFR 1.378(c) to accept the unintentionally delayed payment of the 3.5 year maintenance fee for the above-identified patent.

The petition is **GRANTED**.

The maintenance fee is accepted, and the above-identified patent reinstated as of June 23,2010 . This decision also constitutes notice that the fee has been accepted. An electronic copy of the petition and this decision has been created as an entry in the Image File Wrapper. Nevertheless, petitioner should print and retain an independent copy.

Telephone inquiries related to this electronic decision should be directed to the Electronic Business Center at 1-866-217-9197.

UNITED STATES PATENT AND TRADEMARK OFFICE

COMMISSIONER FOR PATENTS
UNITED STATES PATENT AND TRADEMARK OFFICE
P.O. BOX 1450
ALEXANDRIA, VA 22313-1450
WWW.USPTO.GOV

Paper No. 9

Thomas A. Beck Esq.
26 Rockledge Lane
New Milford CT 06776

COPY MAILED
JUL 14 2006
OFFICE OF PETITIONS

In re Application of :
Naik, et al. :
Application No. 10/320,316 : ON PETITION
Filed: December 16, 2002 :
Attorney Docket No. N/A :

This is a decision on the petition under 37 C.F.R. 1.181, filed June 15, 2006 (certificate of mailing date May 28, 2006), to withdraw the holding of abandonment of the above-identified application.

The petition under 37 CFR 1.181 is **GRANTED**.

This application was held abandoned for failure to properly and timely respond to the Notice to File Missing Parts of Nonprovisional Application, mailed on February 4, 2003, which set forth an extendable 2 month period to submit a fully executed declaration, a surcharge for its late filing, and an abstract. Applicants filed a fully executed declaration and surcharge on April 1, 2003. The Office mailed a Notice of Incomplete Reply on April 22, 2003. The Notice pointed out that an abstract was missing and informed applicants that the original period for reply continued to run from the February 4, 2003 mailing of the Notice to File Missing Parts of Nonprovisional Application. The Office has no record of receiving further correspondence on the matter. The Office contended this application became abandoned on April 5, 2003 for failure to timely submit an abstract. A Notice of Abandonment was mailed on March 28, 2006.

Petitioners assert that an abstract and a request for a two month extension of time and required fee were filed in the Office on June 4, 2003. The original response is not of record in the file and cannot be located. However, petitioners have provided a copy of applicants' itemized postcard receipt showing an Office of Initial Patent Examination date stamp, citing June 4, 2003 as the

date of receipt, affixed thereto. The postcard lists that the filing included an abstract and Notice of Incomplete Reply.

The return postcard constitutes *prima facie* evidence that the items listed thereon, including the abstract, were received in the Office on June 4, 2003. MPEP 503. Petitioners have provided a copy of the June 4, 2003 correspondence.

It is noted that an extension of time was not listed on the postcard receipt. However, the copy of the cover letter to the abstract (submitted with the petition) contains a proper certificate of mailing bearing a May 28, 2003 date of deposit. The cover letter authorizes the Office to charge deposit account no. 02-1651 a $410.00 two month extension of time.

Under 37 C.F.R. § 1.8(a)(1) correspondence is considered timely if: (1) the correspondence is mailed or transmitted prior to expiration of the set period for response by being properly addressed to the Patent and Trademark Office as set out in 37 C.F.R. § 1.1(a) and deposited with the U.S. Postal Service with sufficient postage as first class mail or transmitted to the Patent and Trademark Office in accordance with 37 C.F.R. § 1.6(d); and (2) the correspondence includes a certificate for each piece of correspondence stating the date of deposit or transmission. The person signing the certificate should have a reasonable basis to expect that the correspondence would be mailed or transmitted on or before the date indicated.

The cover letter bears a proper certificate of mailing, dated May 28, 2003, in compliance with the requirements of 37 C.F.R. § 1.8(a)(1) as set forth above. In addition, the person signing the certificate, Attorney Thomas A. Beck, had reasonable basis to expect that the correspondence would be mailed on May 28, 2003.

The evidence presented establishes that an abstract and authorization to charge a two month extension of time to deposit account no. 02-1651 were timely filed on certificate of mailing date May 28, 2003. The petition is **GRANTED**. The holding of abandonment is withdrawn and the March 28, 2006 Notice of Abandonment is vacated.

Deposit account no. 02-1651 will be charged a $410.00 two month extension of time.

The application file will be returned to the Office of Initial Patent Examination for further processing.

Telephone inquiries concerning this matter may be directed to the undersigned at (571) 272-3230.

Shirene Willis Brantley

Shirene Willis Brantley
Senior Petitions Attorney
Office of Petitions

UNITED STATES PATENT AND TRADEMARK OFFICE

COMMISSIONER FOR PATENTS
UNITED STATES PATENT AND TRADEMARK OFFICE
P.O. BOX 1450
ALEXANDRIA, VA 22313-1450
www.uspto.gov

MAILED
FROM DIRECTORS OFFICE

MAR 16 2005

TECHNOLOGY CENTER 3600

FACTOR & LAKE
1327 W Washington Blvd.
Suite 5G/H
Chicago, IL 60607

In re Application of
Joe Delgado et al
Application No. 10/320,323
Filed: December 16, 2002
For: PANEL GUIDE AND IMPACT SEPARATION SYSTEM FOR A SLIDING DOOR

DECISION ON PETITION TO WITHDRAW THE HOLDING OF ABANDONMENT

This is in reply to the petition to withdraw the holding of abandonment under 37 CFR 1.181, filed in the United States Patent and Trademark Office, on December 1, 2004.

The petition is **GRANTED** in view of the following evidence of timely filing :

☒ Postcard receipt being dated March 26, 2004.

☐ USPTO return facsimile receipt dated _____ which identifies the application by serial number and the type of Response that was filed on that date.

☐ Certificate of Mailing/Transmission signed on _____ and supported by a statement under 37 C.F.R. 1.8(b)(3).

☐ Hand Delivery Receipt of the specific documents submitted dated _____.

☐ Certificate of Transmission of CPA under 37 C.F.R. 1.6 filed on _____.

☐ Express Mail Receipt under 37 C.F.R. 1.10 dated _____.

This application is being forwarded to the Supervisory Legal Instruments Examiner for entry of the response filed with the petition, then to the examiner for prompt action on the response.

KJD/jwk: 3/8/05

KENNETH J. DORNER
SPECIAL PROGRAMS EXAMINER
TECHNOLOGY CENTER 3600

UNITED STATES PATENT AND TRADEMARK OFFICE

Commissioner for Patents
United States Patent and Trademark Office
P.O. Box 1450
Alexandria, VA 22313-1450
www.uspto.gov

FACTOR & LAKE
1327 W WASHINGTON BOULEVARD
SUITE 5G/H
CHICAGO, IL 60607

COPY MAILED

OCT 1 1 2006

OFFICE OF PETITIONS

In re Application of	:	
Joe Delgado et al	:	
Application No. 10/320,323	:	DECISION ON PETITION
Filed: December 16, 2002	:	UNDER 37 CFR 1.313(c)(2)
Attorney Docket No. 502 P 166	:	

This is a decision on the petition under 37 CFR 1.313(c)(2), filed June 13, 2005, to withdraw the above-identified application from issue after payment of the issue fee.

The petition is **DISMISSED as moot**.

Unfortunately, the instant petition was not received by the deciding official's office prior to issuance of the above-identified application into a patent. The Office sincerely apologizes for any inconvenience caused petitioner in this matter.

Petitioner's attention is directed to 37 CFR 1.313(d), which states:

> A petition under this section will not be effective to withdraw the application from issue unless it is actually received and granted by the appropriate officials **before the date of issue**.

Since this application has issued, the concurrently filed request for continued examination (RCE) is improper and will not be processed. In view thereof, the $790 filing fee submitted therefor, as well as the petition fee of $130, will be refunded in due course.

The Information Disclosure Statement has been made of record in the file of the above-identified application without further consideration. See 37 CFR 1.97(i).

Telephone inquiries should be directed to the undersigned at (571) 272-3218.

Frances Hicks
Lead Petitions Examiner
Office of Petitions

UNITED STATES PATENT AND TRADEMARK OFFICE

COMMISSIONER FOR PATENTS
UNITED STATES PATENT AND TRADEMARK OFFICE
P.O. BOX 1450
ALEXANDRIA, VA 22313-1450
www.uspto.gov

KEITH FRANTZ
401 WEST STATE STREET
SUITE 200
ROCKFORD, IL 61101

COPY MAILED

JUL 18 2005

OFFICE OF PETITIONS

In re Application of :
Russell L. Caldwell :
Application No. 10/320,324 : ON PETITION
Filed: December 16, 2002 :
Attorney Docket No. None :

This is a decision in response to the petition, filed May 26, 2005, to revive the above-identified application under the provisions of 37 CFR 1.137(b).

The application became abandoned for a failure to reply in a timely manner to the non-final Office action mailed September 8, 2004. A Notice of Abandonment was mailed on March 31, 2005. In response, on May 26, 2005, the present petition was filed.

The petition is found to comply with the requirements of 37 CFR 1.137(b). Accordingly, the petition is **GRANTED**.

The application is being referred to Technology Center AU 1761 for consideration of the amendment filed May 26, 2005.

Telephone inquiries concerning this decision should be directed to the undersigned at (571) 272-3204. Inquiries relating to further prosecution should be directed to the Technology Center.

Sherry D. Brinkley
Petitions Examiner
Office of Petitions
Office of the Deputy Commissioner
for Patent Examination Policy

UNITED STATES PATENT AND TRADEMARK OFFICE

COMMISSIONER FOR PATENTS
UNITED STATES PATENT AND TRADEMARK OFFICE
P.O. BOX 1450
ALEXANDRIA, VA 22313-1450
www.uspto.gov

KEITH FRANTZ
401 WEST STATE STREET
SUITE 200
ROCKFORD, IL 61101

COPY MAILED

JUL 27 2007

OFFICE OF PETITIONS
ON PETITION

In re Application of
Russell L. Caldwell
Application No. 10/320,324
Filed: December 16, 2002
Attorney Docket No. None

This is a decision on the petition under 37 CFR 1.137(b), filed March 9, 2007, to revive the above-identified application.

The petition is **GRANTED**.

The application became abandoned for failure to timely file a reply within the meaning of 37 CFR 1.113 to the final Office action of September 7, 2005. A Notice of Abandonment was mailed on April 13, 2006. On March 9, 2007, the present petition was filed.

The proposed reply required for consideration of a petition to revive must be a Notice of Appeal (and appeal fee required by 37 CFR 41.20(b)(2), an amendment that *prima facie* places the application in condition for allowance, a Request for Continued Examination and submission (37 CFR 1.114), or the filing of a continuing application under 37 CFR 1.53(b). See MPEP 711.03(c)(III)(A)(2).

The petition satisfies the requirements of 37 CFR 1.137(b) in that petitioner has supplied (1) the reply in the form of a Request for Continued Examination (RCE), including the fee of $395 and the submission required by 37 CFR 1.114; (2) the petition fee of $750; and (3) a proper statement of unintentional delay.

This application is being referred to Technology Center AU 1761 for processing of the RCE and for appropriate action by the Examiner in the normal course of business on the amendment submitted in accordance with 37 CFR 1.114.

Telephone inquiries concerning this decision should be directed to the undersigned at (571) 272-3204. Inquiries relating to further prosecution should be directed to the Technology Center.

Sherry D. Brinkley
Petitions Examiner
Office of Petitions

UNITED STATES PATENT AND TRADEMARK OFFICE

Commissioner for Patents
United States Patent and Trademark Office
P.O. Box 1450
Alexandria, VA 22313-1450
www.uspto.gov

LAW OFFICE OF MORRIS E. COHEN, ESQ.
SUITE 217
1122 CONEY ISLAND AVENUE
BROOKLYN, NY 11230-2345

COPY MAILED

AUG 23 2005

OFFICE OF PETITIONS

In re Application of
David Zahner
Application No. 10/320,340
Filed: December 16, 2002
Attorney Docket No. 4042.013.200

: DECISION ON PETITIONS
: UNDER 37 CFR 1.78(a)(3) AND
: UNDER 37 CFR 1.78(a)(6)

This is a decision on the petition filed June 20, 2003, which is being treated as a petition under 37 CFR §§ 1.78(a)(3) and 1.78(a)(6), to accept an unintentionally delayed claim under 35 U.S.C. §§ 120 and 119(e) for the benefit of the prior-filed nonprovisional and provisional applications set forth in the concurrently filed amendment.

The petition is **DISMISSED**.

A petition for acceptance of a claim for late priority under 37 CFR §§ 1.78(a)(3) and 1.78(a)(6) is only applicable to those applications filed on or after November 29, 2000. Further, the petition is appropriate only after the expiration of the period specified in 37 CFR §§ 1.78(a)(2)(ii) and 1.78(a)(5)(ii). In addition, the petition under 37 CFR §§ 1.78(a)(3) and 1.78(a)(6) must be accompanied by:

(1) the reference required by 35 U.S.C. §§ 120 and 119(e) and 37 CFR §§ 1.78(a)(2)(i) and 1.78(a)(5)(i) of the prior-filed application, unless previously submitted;
(2) the surcharge set forth in § 1.17(t); and
(3) a statement that the entire delay between the date the claim was due under 37 CFR §§ 1.78(a)(2)(ii) and 1.78(a)(5)(ii) and the date the claim was filed was unintentional. The Commissioner may require additional where there is a question whether the delay was unintentional.

The petition fails to comply with item (1) above.

The amendment filed June 20, 2003, states that Application No. 09/738,555, filed December 15, 2000, and Application No. 09/738,545, filed December 15, 2000, claims benefit to Provisional Application Nos. 60/143,853 filed July 15, 1999 and Provisional Application No. 60/150,876, filed August 26, 1999. However, Application Nos. 09/738,555 and 09/738,545 were filed more than twelve months of the filing dates of the provisional applications.

Accordingly, before the petition under 37 CFR §§ 1.78(a)(3) and 1.78(a)(6) can be granted, a renewed petition under 37 CFR §§ 1.78(a)(3) and 1.78(a)(6) and a Certificate of Correction (with fee of $100) should be submitted.

Further correspondence with respect to this matter should be addressed as follows:

By mail: Mail Stop PETITIONS
Commissioner for Patents
Post Office Box 1450
Alexandria, VA 22313-1450

By hand: Customer Window located at:

Randolph Building
401 Dulany Street
Alexandria, VA 22314

By fax: (571) 273-8300
ATTN: Office of Petitions

Telephone inquiries concerning this decision should be directed to the undersigned at (571) 272-3208.

Karen Creasy

Karen Creasy
Petitions Examiner
Office of Petitions
Office of the Deputy Commissioner
for Patent Examination Policy

UNITED STATES PATENT AND TRADEMARK OFFICE

Commissioner for Patents
United States Patent and Trademark Office
P.O. Box 1450
Alexandria, VA 22313-1450
www.uspto.gov

LAW OFFICE OF MORRIS E. COHEN
SUITE 217
1122 CONEY ISLAND AENUE
BROOKLYN, NY 11230-2345

COPY MAILED

FEB 0 2 2006

OFFICE OF PETITIONS

In re Patent No. 6,935,402 :
Issue Date: August 30, 2005 : DECISION ON PETITIONS
Application No. 10/320,340 : UNDER 37 CFR 1.78(a)(3) AND
Filed: December 16, 2002 : UNDER 37 CFR 1.78(a)(6)
Attorney Docket No. 4042.013.200 :

This is a decision on the renewed petition under 37 CFR §§ 1.78(a)(3) and 1.78(a)(6), filed August 23, 2005, to accept an unintentionally delayed claim under 35 U.S.C. §§120, and 119(e) for the benefit of the prior-filed applications set forth in the concurrently filed Certificate of Correction.

The petition is **Granted**.

A petition for acceptance of a claim for late priority under 37 CFR §§ 1.78(a)(3) and 1.78(a)(6) is only applicable to those applications filed on or after November 29, 2000. Further, the petition is appropriate only after the expiration of the period specified in 37 CFR §§ 1.78(a)(2)(ii) and 1.78(a)(5)(ii). In addition, the petition under 37 CFR §§ 1.78(a)(3) and 1.78(a)(6) must be accompanied by:

(1) the reference required by 35 U.S.C. §§ 120 and 119(e) and 37 CFR §§ 1.78(a)(2)(i) and 1.78(a)(5)(i) of the prior-filed application, unless previously submitted;
(2) the surcharge set forth in § 1.17(t); and
(3) a statement that the entire delay between the date the claim was due under 37 CFR §§ 1.78(a)(2)(ii) and 1.78(a)(5)(ii) and the date the claim was filed was unintentional. The Commissioner may require additional where there is a question whether the delay was unintentional.

The instant nonprovisional application was filed after November 29, 2000, and the claim herein for the benefit of priority to the prior-filed applications is submitted after expiration of the period specified in 37 CFR §§ 1.78(a)(2)(ii) and 1.78(a)(5)(ii).

The instant nonprovisional application was pending at the time of filing of the reference to the prior-filed provisional applications as required by 37 CFR 1.78(a)(5)(ii). Additionally, the intermediate applications were filed within twelve months of the filing date of the prior-filed provisional applications for which priority is claimed. Accordingly, having found that the instant petition for acceptance of an unintentionally delayed claim for the benefit of priority under 35 U.S.C. §§ 120 and 119(e) to the above-noted, prior-filed applications satisfies the conditions of 37 CFR §§ 1.78(a)(3) and 1.78(a)(6), the petition is granted.

A corrected Filing Receipt, which includes the priority claim to the prior-filed applications, accompanies this decision on petition.

Any questions concerning this matter may be directed to the undersigned at (571) 27203208.

This matter is being forwarded to the Certificates of Correction Branch for appropriate processing of the requested Certificate of Correction.

Karen Creasy

Karen Creasy
Petitions Examiner
Office of Petitions
Office of the Deputy Commissioner
for Patent Examination Policy

ATTACHMENT : Corrected Filing Receipt

UNITED STATES PATENT AND TRADEMARK OFFICE

COMMISSIONER FOR PATENTS
UNITED STATES PATENT AND TRADEMARK OFFICE
P.O. BOX 1450
ALEXANDRIA, VA 22313-1450
www.uspto.gov

COPY MAILED

FEB 03 2004

OFFICE OF PETITIONS

OLIFF & BERRIDGE, PLC
P.O. BOX 19928
ALEXANDRIA, VA 22320

In re Application of
Masao Murade
Application No. 10/320,372
Filed: December 17, 2002
Attorney Docket No. 105981.01

ON PETITION

This is a decision on the petition under 37 CFR 1.313(c)(2), filed January 29, 2004, to withdraw the above-identified application from issue after payment of the issue fee.

The petition is **GRANTED**.

The above-identified application is withdrawn from issue for consideration of a submission under 37 CFR 1.114 (request for continued examination). See 37 CFR 1.313(c)(2).

Petitioner is advised that the issue fee paid on January 8, 2004, in the above-identified application cannot be refunded. If, however, the above-identified application is again allowed, petitioner may request that it be applied towards the issue fee required by the new Notice of Allowance. [1]

Telephone inquiries relating to this decision should be directed to the undersigned at (703) 305-9220.

The application is being referred to Technology Center AU 2818 for further processing of the request for continued examination under 37 CFR 1.114.

Sherry D. Brinkley
Petitions Examiner
Office of Petitions
Office of the Deputy Commissioner
for Patent Examination Policy

[1] The request to apply the issue fee to the new Notice may be satisfied by completing and returning the new Issue Fee Transmittal Form PTOL-85(b), which includes the following language thereon: "Commissioner for Patents is requested to apply the Issue Fee and Publication Fee (if any) or re-apply any previously paid issue fee to the application identified above." Petitioner is advised that, whether a fee is indicated as being due or not, the Issue Fee Transmittal Form **must** be completed and timely submitted to avoid abandonment. Note the language in bold text on the first page of the Notice of Allowance and Fee(s) Due (PTOL-85).

UNITED STATES PATENT AND TRADEMARK OFFICE

#3
7/8/03

COMMISSIONER FOR PATENTS
UNITED STATES PATENT AND TRADEMARK OFFICE
WASHINGTON, D.C. 20231
www.uspto.gov

MAILED

JUL 0 9 2003

TECHNOLOGY CENTER 2100

Paper No. 3

ANTONELLI, TERRY, STOUT & KRAUS, LLP
1300 North Seventeenth Street
Suite 1800
Arlington, VA 22209

In re Application of: Tawfik Arabi, et al.)
Application No. 10/320,387)
Filed: December 17, 2002) **DECISION ON REQUEST FOR**
For: METHOD AND APPARATUS TO) **WITHDRAWAL AS ATTORNEY**
PROVIDE PLATFORM LOAD LINES)

This is a decision on the Request To Withdraw from Representation filed June 23, 2003.

A grantable request to withdraw as attorney of record should indicate thereon the present mailing addresses of the attorney(s) who is/are withdrawing from the record and of the applicant. The request for withdrawal must be signed by every attorney seeking to withdraw or contain a clear indication that one attorney is signing on behalf of another/others. A request to withdraw will not be approved unless at least 30 (thirty) days would remain between the date of approval and the later of the expiration date of a time to file a response or the expiration date of the maximum time period which can be extended under 37 C.F.R. § 1. 136(a). The effective date of withdrawal being the date of decision and not the date of request. See M.P.E.P. § 402.06. 37 C.F.R. § 1.36 further requires that the applicant or patent owner be notified of the withdrawal of the attorney or agent.

The request is **GRANTED**.

All future communications from the Office will be directed to the below-listed address until otherwise notified by applicant. This correspondence address is provided by the withdrawn attorney(s). Applicant is reminded of the obligation to promptly notify the Patent and Trademark Office (Office) of any change in correspondence address to ensure receipt of all communications from the Office.

For Vincent N. Trans
Special Programs Examiner
Technology Center 2100
Computer Architecture and Software
(703) 305-9750

cc: BLAKELY, SOKOLOFF, TAYLOR & ZAFMAN LLP
c/o Grace Abercrombie
1279 Oakmead Parkway
Sunnyvale, CA 94086

UNITED STATES DEPARTMENT OF COMMERCE
Patent and Trademark Office
ASSISTANT SECRETARY OF COMMERCE AND
COMMISSIONER OF PATENTS AND TRADEMARKS
Washington, DC 20231

6/3/09

Patent No. :7042989
Inventor(s) :Lawson et al.
Issued : 5/9/2006
Title : Flexible Call Alerting
Atty.doc./File No.

Request for Certificates of Correction

Consideration has been given to your request for the issuance of a Certificate of Correction, for the above – identified patent under the provisions of CFR 1.322.

Inspection of the application for the patent reveals claims is printed in accordance with the record and this changes will affect the scope of the claims suggested by the SPE. Therefore being no fault on the Patent and Trademark Office, It has no authority to issue a certificate of correction under the provision of 1.322.

In view of the forgoing, your request in this matter, is hereby denied.

Future written correspondence concerning this matter should be filed and directed to Decisions & Certificates of Correction Branch.

Henry Randall
Decisions & Certificates
of Correction Branch
(703) 756-1571

Greenblum & Berstein, P.L.C.
1950 Roland Clarke Place
Reston, VA 20191

HR

SPE RESPONSE FOR CERTIFICATE OF CORRECTION

Paper No.: _____

DATE : 6-9-2005

TO SPE OF : ART UNIT 1763

SUBJECT : Request for Certificate of Correction on Patent No.: 6,858,087

App. # 10/320,430

A response is requested with respect to the accompanying request for a certificate of correction.

Please complete this form and return with file, within **7** days to:
Palm location **7580, Certificates of Correction Branch – South Tower – 9A22**
If response is for an IFW, **return to employee (named below) via PUBSCofC Team in MADRAS.**
With respect to the change(s) requested, correcting Office and/or Applicant's errors, should the patent read as shown in the certificate of correction (COCIN)? No new matter should be introduced, nor should the scope or meaning of the claims be changed.

Thank You For Your Assistance

Certificates of Correction Branch
Tel. No. 703-308-9309 ext. 116

MAGDALENE TALLEY

The request for issuing the above-identified correction(s) is hereby:
Note your decision on the appropriate box.

- ☒ **Approved** — **All** changes apply.
- ☐ **Approved in Part** — Specify below which changes **do not** apply.
- ☐ **Denied** — State the reasons for denial below.

Comments:

PARVIZ HASSANZADEH
SUPERVISORY PATENT EXAMINER

1763

SPE **Art Unit**

UNITED STATES PATENT AND TRADEMARK OFFICE

Commissioner for Patents
United States Patent and Trademark Office
P.O. Box 1450
Alexandria, VA 22313-1450
www.uspto.gov

MAILED

FEB 26 2010

OFFICE OF PETITIONS

Berenati & White, LLC
6550 Rock Spring Drive
Suite 240
Bethesda, MD 20817

In re Patent No. 6,853,313 :
Issue Date: February 8, 2005 :
Application No. 10/320,431 : ON PETITION
Filed: February 17, 2002 :
Attorney Docket No. 9037.003 :

This is a decision on the petition under 37 CFR 1.378(c), filed November 24, 2009, to accept the unintentionally delayed payment of a maintenance fee for the above-identified patent.

The petition is **GRANTED**.

This patent expired on February 9, 2009, for failure to pay the four and one-half year maintenance fee. Since this petition was submitted within twenty-four months after the six-month grace period provided in 37 CFR 1.362(e), the petition was timely filed under the provisions of 37 CFR 1.378(c).

The maintenance fee is hereby accepted and the above-identified patent is reinstated as of the mail date of this decision.

It is not apparent whether the person filing the statement of unintentional delay was in a position to have firsthand or direct knowledge of the facts and circumstances of the delay at issue. Nevertheless, such statement is being treated as having been made as the result of a reasonable inquiry into the facts and circumstances of such delay. In the event that such an inquiry has not been made, petitioner must make such an inquiry. If such inquiry results in the discovery that the delay in paying the maintenance fee under 37 CFR 1.378(c) was intentional, petitioner must notify the Office.

As authorized the petition fee of $1,640 and the maintenance fee of $490 will be charged to deposit account 50-0548.

Telephone inquiries concerning this decision should be directed to Kimberly Inabinet at (571) 272-4618.

The patent file is being forwarded to Files Repository.

/Kimberly Inabinet/

Kimberly Inabinet
Petitions Examiner
Office of Petitions

UNITED STATES PATENT AND TRADEMARK OFFICE

Commissioner for Patents
United States Patent and Trademark Office
P.O. Box 1450
Alexandria, VA 22313-1450
www.uspto.gov

PATTON BOGGS, LLP
2550 M STREET NW
WASHINGTON, DC 20037-1350

COPY MAILED

APR 0 4 2005

OFFICE OF PETITIONS

In re Application of :
Philip Glen Miller :
Application No. 10/320,462 : ON PETITION
Filed: December 17, 2002 :
Attorney Docket No. 11096.104 :

This is a decision on the petition under 37 CFR 1.137(b), filed November 8, 2004, to revive the above-identified application.

The petition is **DISMISSED**.

Any request for reconsideration of this decision must be submitted within TWO (2) MONTHS from the mail date of this decision. Extensions of time under 37 CFR 1.136(a) are permitted. The reconsideration request should include a cover letter entitled "Renewed Petition under 37 CFR 1.137(b)." This is **not** a final agency action within the meaning of 5 U.S.C. § 704.

The above-identified application became abandoned for failure to reply within the meaning of 37 CFR 1.113 in a timely manner to the final Office action mailed January 27, 2004, which set a shortened statutory period for reply of three (3) months. A three month extension of time under the provisions of 37 CFR 1.136(a) was obtained. Accordingly, the above-identified application became abandoned on July 28, 2004. A Notice of Abandonment was mailed on October 6, 2004.

A grantable petition under 37 CFR 1.137(b) must be accompanied by: (1) the required reply, unless previously filed; (2) the petition fee as set forth in 37 CFR 1.17(m); (3) a statement that the entire delay in filing the required reply from the due date for the reply until the filing of a grantable petition pursuant to 37 CFR 1.137(b) was unintentional; and (4) any terminal disclaimer (and fee as set forth in 37 CFR 1.20(d)) required by 37 CFR 1.137(c). Where there is a question as to whether either

the abandonment or the delay in filing a petition under 37 CFR 1.137 was unintentional, the Commissioner may require additional information. See MPEP 711.03(c)(III)(C) and (D). The instant petition lacks item (1).

As noted above, this application became abandoned for failure to file a reply within the meaning of 37 CFR 1.113 to the final rejection of January 27, 2004, within the time period for reply. The amendment filed with the petition does not *prima facie* place the application in condition for allowance. Therefore, the proposed reply required for consideration of a petition to revive must be a Notice of Appeal (and fee required by law); an amendment under 37 CFR 1.116 that cancels all the rejected claims or otherwise *prima facie* places the application in condition for allowance; the filing of a request for continued examination (RCE) (accompanied by a submission and the requisite fee) under 37 CFR 1.114; or the filing of a continuing application under 37 CFR 1.53(b).

Further correspondence with respect to this matter should be addressed as follows:

By mail: Mail Stop PETITIONS
Commissioner for Patents
Post Office Box 1450
Alexandria, VA 22313-1450

By hand: Customer Service Window
Mail Stop Petitions
Randolph Building
401 Dulany Street
Alexandria, VA 22314

By fax: (703) 872-9306
ATTN: Office of Petitions

Any questions concerning this matter may be directed to the undersigned at (571) 272-3218.

Frances Hicks
Petitions Examiner
Office of Petitions
Office of the Deputy Commissioner
for Patent Examination Policy

UNITED STATES PATENT AND TRADEMARK OFFICE

Commissioner for Patents
United States Patent and Trademark Office
P.O. Box 1450
Alexandria, VA 22313-1450
www.uspto.gov

PATTON BOGGS, LLP
2550 M STREET NW
WASHINGTON, DC 20037-1350

COPY MAILED

OCT 14 2005

OFFICE OF PETITIONS

In re Application of :
Philip Glen Miller :
Application No. 10/320,462 : ON PETITION
Filed: December 17, 2002 :
Attorney Docket No. 11096.104 :

This is a decision on the renewed petition under 37 CFR 1.137(b), filed June 6, 2005, to revive the above-identified application.

The petition is **DISMISSED**.

Any request for reconsideration of this decision must be submitted within TWO (2) MONTHS from the mail date of this decision. Extensions of time under 37 CFR 1.136(a) are permitted. The reconsideration request should include a cover letter entitled "Renewed Petition under 37 CFR 1.137(b)." This is **not** a final agency action within the meaning of 5 U.S.C. § 704.

The above-identified application became abandoned for failure to reply within the meaning of 37 CFR 1.113 in a timely manner to the final Office action mailed January 27, 2004, which set a shortened statutory period for reply of three (3) months. A three month extension of time under the provisions of 37 CFR 1.136(a) was obtained. Accordingly, the above-identified application became abandoned on July 28, 2004. A Notice of Abandonment was mailed on October 6, 2004.

A grantable petition under 37 CFR 1.137(b) must be accompanied by: (1) the required reply, unless previously filed; (2) the petition fee as set forth in 37 CFR 1.17(m); (3) a statement that the entire delay in filing the required reply from the due date for the reply until the filing of a grantable petition pursuant to 37 CFR 1.137(b) was unintentional; and (4) any terminal disclaimer (and fee as set forth in 37 CFR 1.20(d)) required by

37 CFR 1.137(c). Where there is a question as to whether either the abandonment or the delay in filing a petition under 37 CFR 1.137 was unintentional, the Commissioner may require additional information. See MPEP 711.03(c)(III)(C) and (D).

The instant petition lacks item (1) above. In this regard, an amendment *prima facie* placing the application in condition for allowance has not been filed. *Note* Advisory Action attached. Therefore, the proposed reply required for consideration of a petition to revive must be a Notice of Appeal (and fee required by law); the filing of a request for continued examination (RCE) (accompanied by a submission and the requisite fee) under 37 CFR 1.114; or the filing of a continuing application under 37 CFR 1.53(b).

Further correspondence with respect to this matter should be addressed as follows:

By mail: Mail Stop PETITIONS
Commissioner for Patents
Post Office Box 1450
Alexandria, VA 22313-1450

By hand: Customer Service Window
Mail Stop Petitions
Randolph Building
401 Dulany Street
Alexandria, VA 22314

By fax: (571) 273-8300
ATTN: Office of Petitions

Any questions concerning this matter may be directed to the undersigned at (571) 272-3218.

Frances Hicks

Frances Hicks
Petitions Examiner
Office of Petitions
Office of the Deputy Commissioner
for Patent Examination Policy

ATTACHMENT: Courtesy Advisory Action

UNITED STATES PATENT AND TRADEMARK OFFICE

Commissioner for Patents
United States Patent and Trademark Office
P.O. Box 1450
Alexandria, VA 22313-1450
www.uspto.gov

PATTON BOGGS LLP
2550 M STREET NW
WASHINGTON, DC 20037-1350

COPY MAILED

JAN 11 2006

OFFICE OF PETITIONS

In re Application of	:	
Philip Glen Miller	:	
Application No. 10/320,462	:	DECISION GRANTING PETITION
Filed: December 17, 2002	:	UNDER 37 CFR 1.137(b)
Attorney Docket No. 11096.104	:	

This is a decision on the petition under 37 CFR 1.137(b), filed November 10, 2005, to revive the above-identified application.

The petition is **GRANTED**.

As noted in the decision mailed October 14, 2005, this application became abandoned for failure to reply within the meaning of 37 CFR 1.113 in a timely manner to the final Office action mailed January 27, 2004, which set a shortened statutory period for reply of three (3) months. A three month extension of time under the provisions of 37 CFR 1.136(a) was obtained. Accordingly, the above-identified application became abandoned on July 28, 2004. A Notice of Abandonment was mailed on October 6, 2004.

The petition satisfies the conditions for revival pursuant to the provisions of 37 CFR 1.137(b) in that (1) the reply in the form of a request for continued examination (RCE) and fee of $395 (submission under 37 CFR 1.114 previously filed); (2) the petition fee of $665; and (3) the required statement of unintentional delay have been received. Accordingly, the reply to the final Office action of January 27, 2004 is accepted as having been unintentionally delayed.

Telephone inquiries concerning this decision should be directed to the undersigned at (571) 272-3218.

This matter is being referred to Technology Center AU 3742 for processing of the RCE filed November 10, 2005 and for action on the submission under 37 CFR 1.114.

Frances Hicks
Petitions Examiner
Office of Petitions

C:\documents and settings\fhicks\my documents\470\Jan9\320461 1-10-06

UNITED STATES PATENT AND TRADEMARK OFFICE

Commissioner for Patents
United States Patent and Trademark Office
P.O. Box 1450
Alexandria, VA 22313-1450
www.uspto.gov

PATTON BOGGS LLP
2550 M STREET NW
WASHINGTON, DC 20037-1350

COPY MAILED

JAN 11 2006

OFFICE OF PETITIONS

In re Application of	:	
Philip Glen Miller	:	
Application No. 10/320,462	:	DECISION GRANTING PETITION
Filed: December 17, 2002	:	UNDER 37 CFR 1.137(b)
Attorney Docket No. 11096.104	:	

This is a decision on the petition under 37 CFR 1.137(b), filed November 10, 2005, to revive the above-identified application.

The petition is **GRANTED**.

As noted in the decision mailed October 14, 2005, this application became abandoned for failure to reply within the meaning of 37 CFR 1.113 in a timely manner to the final Office action mailed January 27, 2004, which set a shortened statutory period for reply of three (3) months. A three month extension of time under the provisions of 37 CFR 1.136(a) was obtained. Accordingly, the above-identified application became abandoned on July 28, 2004. A Notice of Abandonment was mailed on October 6, 2004.

The petition satisfies the conditions for revival pursuant to the provisions of 37 CFR 1.137(b) in that (1) the reply in the form of a request for continued examination (RCE) and fee of $395 (submission under 37 CFR 1.114 previously filed); (2) the petition fee of $665; and (3) the required statement of unintentional delay have been received. Accordingly, the reply to the final Office action of January 27, 2004 is accepted as having been unintentionally delayed.

Telephone inquiries concerning this decision should be directed to the undersigned at (571) 272-3218.

This matter is being referred to Technology Center AU 3742 for processing of the RCE filed November 10, 2005 and for action on the submission under 37 CFR 1.114.

Frances Hicks
Petitions Examiner
Office of Petitions

C:\documents and settings\fhicks\my documents\470\Jan9\320461 1-10-06

SPE RESPONSE FOR CERTIFICATE OF CORRECTION

Paper No.: 20091203

DATE : 3/14/08

TO SPE OF : ART UNIT 2624

SUBJECT : Request for Certificate of Correction on Patent No.: 7187781

A response is requested with respect to the accompanying request for a certificate of correction.

Please complete this form and return with file, within 7 days to:
Palm location **7580, Certificates of Correction Branch – South Tower – 9A22**
If response is for an IFW, **return to employee (named below) via PUBSCofC Team in MADRAS.**
With respect to the change(s) requested, correcting Office and/or Applicant's errors, should the patent read as shown in the certificate of correction (COCIN)? No new matter should be introduced, nor should the scope or meaning of the claims be changed.

Valerie Jackson

Thank You For Your Assistance

Certificates of Correction Branch
Tel. No. 703-308-9390 ext. 114

The request for issuing the above-identified correction(s) is hereby:
Note your decision on the appropriate box.

☑ **Approved**	**All** changes apply.
☐ **Approved in Part**	Specify below which changes **do not** apply.
☐ **Denied**	State the reasons for denial below.

Comments:

BHAVESH M. MEHTA
SUPERVISORY PATENT EXAMINER
TECHNOLOGY CENTER 2600
SPE

2624
Art Unit

UNITED STATES PATENT AND TRADEMARK OFFICE

COMMISSIONER FOR PATENTS
UNITED STATES PATENT AND TRADEMARK OFFICE
WASHINGTON, D.C. 20231
www.uspto.gov

Paper No. 5

SMITH, GAMBRELL & RUSSELL, LLP
1850 M STREET, N.W., SUITE 800
WASHINGTON, DC 20036

COPY MAILED

JUN 19 2003

OFFICE OF PETITIONS

In re Application of :
Miyake, et al. :
Application No. 10/320,474 : ON PETITION
Filed: December 17, 2002 :
Atty. Dkt. No.: 33036M553104 :

This is a decision on the "PETITION IN RESPONSE TO NOTICE OF OMITTED ITEM(S) IN A NONPROVISIONAL APPLICATION" filed April 14, 2003. This petition is being treated under 37 CFR 1.182 as a petition to accord the above-identified application a filing date of December 17, 2002 and accept entry of Pages 10, 11, and 12.

The application was filed December 17, 2002 as a divisional application of U.S. Application No. 09/833,585. On March 14, 2003, the Office of Initial Patent Examination mailed a Notice of Omitted Items(s) in a Nonprovisional Application ("Notice") stating that the application had been accorded a filing date, but that Pages 10, 11, and 12 of the specification appeared to have been omitted.

The Notice permits applicant to either: (1) promptly establish prior receipt in the PTO of the drawing(s) at issue (generally by way of a date-stamped postcard receipt (MPEP 503)), or (2) promptly submit the omitted drawing(s) in a nonprovisional application and accept the date of such submission as the application filing date. An applicant asserting that the missing drawings were in fact deposited in the PTO with the application papers must file a petition (and the appropriate petition fee) with evidence of such deposit. An applicant desiring to submit the omitted drawings in a nonprovisional application and accept the date of such submission as the application filing date must file any omitted drawing(s) with an oath or declaration in compliance with 37 CFR 1.63 and 1.64 referring to such drawing(s) and a petition under 37 CFR 1.182 (with the petition fee under 37 CFR 1.17(h)) requesting the later filing date within two months of the date of the Notice (37 CFR 1.181(f)).

In response to the Notice, petitioner has submitted the omitted items upon petition and indicates that the items were inadvertently omitted from the application filing. Petitioner further argues that the omitted items were incorporated by reference into the divisional application.

Petitioner requests, in effect, that Pages 10, 11, and 12 be entered into the record and that the application be accorded a filing date of December 17, 2002.

An incorporation by reference statement may be relied upon to permit the entering of a portion of the prior application into the continuation or divisional application when the portion of the prior application has been inadvertently omitted from the submitted application papers in the continuation or divisional application. The inclusion of this incorporation by reference of

the prior application(s) will permit an applicant to amend the continuation or divisional application to include any subject matter in such prior application(s), without the need for a petition provided the continuation or divisional application is entitled to a filing date notwithstanding the incorporation by reference. *See*, MPEP 201.06(c).

Accordingly, in view of the incorporation by reference of the prior application, Pages 10, 11, and 12 are not new matter if these pages were part of the disclosure of the prior application.

Petitioner is advised to promptly submit a supplemental preliminary amendment requesting entry of the omitted pages prior to the issuance of the first Office action on the merits.

The petition fee of $130.00 has been charged to deposit account No. 02-4300. The petition fee will not be refunded since the petition under 37 CFR 1.182 was necessary to correct petitioner's filing error.

In view of the above, the petition is **DISMISSED**.

The application is being returned to the Office of Initial Patent Examination for further processing with a filing date of December 17, 2002.

Telephone inquiries related to this decision may be directed to Petitions Attorney Alesia M. Brown at (703) 305-0310.

Beverly M. Flanagan
Supervisory Petitions Examiner
Office of Petitions

UNITED STATES PATENT AND TRADEMARK OFFICE

Commissioner for Patents
United States Patent and Trademark Office
P.O. Box 1450
Alexandria, VA 22313-1450
www.uspto.gov

BERENATO & WHITE, LLC
6550 ROCK SPRING DRIVE
SUITE 240
BETHESDA MD 20817

COPY MAILED

NOV 2 0 2009

OFFICE OF PETITIONS

In re Patent No. 6,772,525	:	
Issue Date: August 10, 2004	:	
Application No. 10/320,476	:	ON PETITION
Filed: December 17, 2002	:	
Attorney Docket No. APV31584	:	

This is a decision on the petition under 37 CFR 1.378(c), filed September 16, 2009, and resubmitted on October 16, 2009, to accept the unintentionally delayed payment of a maintenance fee for the above-identified patent.

The petition is **GRANTED**.

This patent expired at midnight August 10, 2008, for failure to pay the 3½ year maintenance fee. Since this petition was submitted within twenty-four months after the six-month grace period provided in 37 CFR 1.362(e), the petition was timely filed under the provisions of 37 CFR 1.378(c).

The maintenance fee is hereby accepted and the above-identified patent is reinstated as of the mail date of this decision.

There is no indication that the petition is signed by a registered patent attorney or patent agent of record. However, in accordance with 37 CFR 1.34, the signature of Mr. David Taylor appearing on the correspondence shall constitute a representation to the United States Patent and Trademark Office that he is authorized to represent the particular party in whose behalf he acts. If, Mr. David Taylor desires to be acknowledged as the attorney of record in this file, the appropriate power of attorney documents must be submitted.

Telephone inquiries concerning this decision should be directed to JoAnne Burke at (571) 272-4584.

Ramesh Krishnamurthy
Petitions Examiner
Office of Petitions

UNITED STATES PATENT AND TRADEMARK OFFICE

COMMISSIONER FOR PATENTS
UNITED STATES PATENT AND TRADEMARK OFFICE
P.O. BOX 1450
ALEXANDRIA, VA 22313-1450
www.uspto.gov

Paper No.

FOLEY AND LARDNER LLP
SUITE 500
3000 K STREET NW
WASHINGTON DC 20007

COPY MAILED
MAR 08 2010

In re Application of	:	
Holch	:	
Application No. 10/320,482	:	ON APPLICATION FOR
Filed: December 17, 2002	:	PATENT TERM ADJUSTMENT
Atty Docket No. 076425-0104	:	
Title: CASHLESS COMPUTERIZED	:	
WAGER POOL GAME SYSTEM AND	:	
METHOD	:	

This is in response to the "REQUEST FOR RECONSIDERATION OF PATENT TERM ADJUSTMENT UNDER 37 C.F.R. § 1.705," filed December 7, 2009. Applicant submits that the correct patent term adjustment to be indicated on the patent is eight hundred and eighty (880) days, not five hundred and twelve (512) days as calculated by the Office as of the mailing of the initial determination of patent term adjustment. Applicant requests this correction solely on the basis that the Office will take in excess of three years to issue this patent.

As the instant application for patent term adjustment requests reconsideration of the patent term adjustment as it relates to the Office's failure to issue the patent within 3 years of the filing date, the application for patent term adjustment under 37 CFR 1.705(b) is **DISMISSED as PREMATURE**.

Knowledge of the actual date the patent issues is required to calculate the amount, if any, of additional patent term patentee is entitled to for Office failure to issue the patent within 3 years. See § 1.702(b). (This is true even where a request for continued examination (RCE) was filed). The computer will not undertake the § 1.702(b) calculation until the actual date of issuance of the patent has been determined. Likewise, the computer will not calculate any further Office delay under

§ 1.702(a)(4) or applicant delay under § 1.704(c)(10) until the actual date of issuance of the patent has been determined. As such, the Office cannot make a determination on the correctness of the patent term adjustment until the patent has issued.

Requesting reconsideration of the patent term adjustment to be indicated on the patent under 37 CFR 1.705(b) based on the initial determination of patent term adjustment and a projected issuance date of the patent (or even the filing date of the request for continued examination) is premature. Accordingly, it is appropriate to dismiss as premature such a request.

Rather than file an application for patent term adjustment under 37 CFR 1.705(b) contesting the 37 CFR 1.702(b) calculation at the time of the mailing of the notice of allowance, applicant is advised that they may wait until the time of the issuance of the patent and file a request for reconsideration of the patent term adjustment pursuant to 37 CFR 1.705(d). As the USPTO does not calculate the amount of time earned pursuant to 37 CFR 1.702(b) until the time of the issuance of the patent, the Office will consider any request for reconsideration of the patent term adjustment due to an error in the calculation of 37 CFR 1.702(b) to be timely if the request for reconsideration is filed within two months of the issuance of the patent. However, as to all other bases for contesting the initial determination of patent term adjustment received with the notice of allowance, applicant must timely file an application for patent term adjustment prior to the payment of the issue fee.[1]

The Office acknowledges submission of the $200.00 fee set forth in 37 CFR 1.18(e). No additional fees are required.

Any request for reconsideration of the patent term adjustment indicated on the patent must be timely filed within 2 months

---

[1] For example, if applicant disputes both the calculation of patent term adjustment under 37 CFR 1.702(a)(1) for Office failure to mail a first Office action or notice of allowance not later than fourteen months after the date on which the application was filed and under 37 CFR 1.702(b) for Office failure to issue a patent within three years of the actual filing date of the application, then applicant must still timely file an application for patent term adjustment prior to the payment of the issue fee to contest the calculation of Office delay in issuing a first Office action or notice of allowance. See 37 CFR 1.705(b) and 35 U.S.C. 154(b)(3)(B). A dispute as to the calculation of the §1.702(a)(1) period raised on request for reconsideration of patent term adjustment under 37 CFR 1.705(d) will be dismissed as untimely filed.

after issuance pursuant to 37 CFR 1.705(d) and must include payment of the required fee under 37 CFR 1.18(e).

The Office of Data Management has been advised of this decision. This application is being referred to the Office of Data Management for issuance of the patent.

Telephone inquiries regarding this decision should be directed to Senior Attorney Paul Shanoski at (571) 272-3225.

Nancy Johnson
Senior Petitions Attorney
Office of Petitions

UNITED STATES PATENT AND TRADEMARK OFFICE

Commissioner for Patents
United States Patent and Trademark Office
P.O. Box 1450
Alexandria, VA 22313-1450
www.uspto.gov

Date : June 29, 2005

TO : Director, Office of Patent Publication

FROM : Office of the Deputy Commissioner
for Patent Examination Policy

SUBJECT : Withdrawal from Issue of

Applicant(s) : Yoshiyuki Sasaki
Application No. : 10/320,489
Filed : December 17, 2002

The above-identified application has been assigned Patent No. 6,917,578 and an issue date of July 12, 2005.

It is hereby directed that this application be withdrawn from issue at the request of the applicant.

Do not refund the issue fee.

The following erratum should be published in the Official Gazette if the above-identified application is published in the OG of July 12, 2005:

> "All reference to Patent No. 6,917,578 to YOSHIYUKI SASAKI of JAPAN for DATA MANAGEMENT INFORMATION OBTAINING METHOD FOR OBTAINING DATA MANAGEMENT INFORMATION INCLUDING INFORMATION CONCERNING PART OF DATA AREAS AS INFORMATION CONCERNING A PSEUDO AREA appearing in the Official Gazette of July 12, 2005, should be deleted since no patent was granted."

Sherry D. Brinkley
Petitions Examiner
Office of Petitions
Office of the Deputy Commissioner
for Patent Examination Policy

cc: Paul Harrison, Crystal Park 3-44l (FAX-306-2737)
Deneise Boyd, Crystal Park 2, Suite 1100 (FAX-308-5413)
Mary Louise McAskill, Crystal Park 3-910 (FAX 305-4372)
Niomi Farmer, Crystal Park 3-9l0 (FAX-305-4372)
Mary E. Johnson (Cookie), P/OCS, CM1-6D07
Duane K.Davis, P/OCS, CM1-6A07
Tamara K. Greene, PK3-910

UNITED STATES PATENT AND TRADEMARK OFFICE

COMMISSIONER FOR PATENTS
UNITED STATES PATENT AND TRADEMARK OFFICE
P.O. BOX 1450
ALEXANDRIA, VA 22313-1450
www.uspto.gov

DICKSTEIN SHAPIRO MORIN & OSHINSKY LLP
2101 L Street, NW
Washington, DC 20037

COPY MAILED

JUN 2 9 2005

OFFICE OF PETITIONS

In re Application of :
Yoshiyuki Sasaki :
Application No. 10/320,489 : ON PETITION
Filed: December 17, 2002 :
Attorney Docket No. R2184.0194/P194 :

This is a decision on the petition, filed June 27, 2005, under 37 CFR 1.313(c)(2) to withdraw the above-identified application from issue after payment of the issue fee.

The petition is **GRANTED**.

The above-identified application is withdrawn from issue for consideration of a submission under 37 CFR 1.114 (request for continued examination). See 37 CFR 1.313(c)(2).

Petitioner is advised that the issue fee paid on May 9, 2005, in the above-identified application cannot be refunded. If, however, the above-identified application is again allowed, petitioner may request that it be applied towards the issue fee required by the new Notice of Allowance. [1]

Telephone inquiries relating to this decision should be directed to the undersigned at (571) 272-3204.

The application is being referred to Technology Center AU 2655 for further processing of the request for continued examination under 37 CFR 1.114.

Sherry D. Brinkley
Petitions Examiner
Office of Petitions

[1]The request to apply the issue fee to the new Notice may be satisfied by completing and returning the new Issue Fee Transmittal Form PTOL-85(b), which includes the following language thereon: " Commissioner for Patents is requested to apply the Issue Fee and Publication Fee (if any) or re-apply any previously paid issue fee to the application identified above." Petitioner is advised that, whether a fee is indicated as being due or not, the Issue Fee Transmittal Form must be completed and timely submitted to avoid abandonment. Note the language in bold text on the first page of the Notice of Allowance and Fee(s) Due (PTOL-85).

UNITED STATES PATENT AND TRADEMARK OFFICE

Commissioner for Patents
United States Patent and Trademark Office
P.O. Box 1450
Alexandria, VA 22313-1450
www.uspto.gov

JAN 19 2005

FRIED, FRANK, HARRIS, SHRIVER & JACOBSON
1001 PENNSYLVANIA AVE., N.W., SUITE 800
WASHINGTON DC 20004-2505

In re Application of:
Anne D. Frame
Serial No.: 10/320,492
Filed: December 17, 2002
Attorney Docket No.: 94756/4

DECISION ON PETITION TO WITHDRAW THE HOLDING OF ABANDONMENT

This is in response to applicants' petition under 37 CFR. § 1.181(a) and MPEP 711.03(c) filed on January 4, 2005, requesting withdrawal of the holding of abandonment of the above-identified application based on non-receipt of an Office action and to restore the application to a pending status.

A review of the file history shows that the examiner mailed an Office action to applicant on June 1, 2004, setting a one-month statutory time period for reply. On December 14, 2004, the examiner mailed a notice of abandonment for failure to respond to the outstanding Office action.

Applicant states that the Office action of June 1, 2004 was never received and provides as evidence thereof a copy of the attorney docket report where the Office action would have been entered if received, showing non-receipt of the Office action. Based on the evidence presented, it is concluded that applicant never received the Office action. In view thereof, the Notice of Abandonment mailed December 14, 2004, is vacated and the application is restored to pending status with the mailing date of this decision.

Applicant's petition is **GRANTED**. The application will be forwarded to the examiner for prompt mailing of a new Office action.

Should there be any questions about this decision, please contact Marianne C. Seidel by letter addressed to Director, TC 1600, at the address listed above, or by telephone at 571-272-0584 or by facsimile at 703-872-9306.

Marianne C. Seidel /for

Bruce Kisliuk
Director, Technology Center 1600

UNITED STATES PATENT AND TRADEMARK OFFICE

Commissioner for Patents
United States Patent and Trademark Office
P.O. Box 1450
Alexandria, VA 22313-1450
www.uspto.gov

MAY 17 2007

MICHAEL DAVID, ESQ.
FRIED, FRANK, HARRIS, SHRIVER & JACOBSON LLP
1001 PENNSYLVANIA AVENUE, NW
SUITE 800
WASHINGTON, DC 2004-2505

In re Application of	:
Anne D. Frame	:
Serial No.: 10/320,492	: PETITION DECISION
Filed: December 17, 2002	:
Attorney Docket No.: 94756/4	:

This is in response to the petition under 37 CFR 1.144, filed February 13, 2007, requesting review and withdrawal of the restriction requirement. The delay in acting upon this petition is regretted.

BACKGROUND

A review of the file history shows that this application was filed on December 17, 2002, under 35 U.S.C. 111(a). The examiner mailed to applicants on February 24, 2004, a restriction requirement, wherein three distinct inventions (Groups I-III) were identified and rationale set forth establishing the examiner's position. Applicant was further required to elect a single species for examination.

Applicant replied on March 22, 2004, electing Group I (claims 31-32 and 46-49) and six species, with traverse. Applicant argued that the examiner had failed to show distinction between the three groups. Applicant also pointed out that a preliminary amendment was filed along with the application withdrawing claims 1-29 and adding claims 30-49.

The examiner mailed an Office action on June 1, 2004, wherein the restriction requirement mailed on March 22, 2004, was withdrawn. The examiner set forth a new restriction requirement, wherein three distinct inventions (Groups I-III) were identified and rationale set forth establishing the examiner's position. Applicants were further required to elect a single species for examination.

On April 18, 2005, the examiner mailed a new restriction requirement wherein basically the same three groups (Groups I-III) and species requirement was set forth. The new restriction requirement was set forth in order to accurately reflect the pending claims.

Applicant replied on May 18, 2005, electing Group I (claims 30-35) and six species, with traverse. Applicant argued that the examiner had failed to show distinction between the three groups.

The examiner mailed a non-final Office action on August 26, 2005, acknowledging the election of Group I and the traversal. The species requirement was treated as an election without traverse. The examiner maintained the requirement and made it FINAL. Claims 36-49 were withdrawn from consideration as being drawn to a nonelected invention. Claims 30-32 were rejected under 35 U.S.C. 101 and 35 U.S.C. 112, first paragraph, for lacking utility. Claims 30-32 were rejected under 35 U.S.C. 112, first paragraph, for failing to comply with the written description requirement and for lack of enablement. Claims 30-32 were rejected under 35 U.S.C. 112, second paragraph, for being indefinite. Claims 33-35 were rejected under 35 U.S.C. 102(b) as being anticipated by Tsay et al. and Pare, respectively.

On November 9, 2005, applicant responded with arguments appropriately addressing the rejections of record.

The examiner mailed a second non-final Office action on February 10, 2006. The rejections under 35 U.S.C. 101 were withdrawn. The rejection under 35 U.S.C. 112, first paragraph, for stigamastan-3,5-diene was withdrawn. Claims 30-32 were rejected under 35 U.S.C. 112, second paragraph, as being indefinite. The rejection of claims 30-32 under 35 U.S.C. 112, first paragraph, with regard to the compound cobaltacene-octomet was maintained. Claim 30 was rejected under 35 U.S.C. 102(b) as being anticipated by Mauro et al. The rejections of claims 33-35 under 35 U.S.C. 102(b) as being anticipated by Tsay et al. and Pare were maintained.

On May 4, 2006, applicant responded with amendments to the claims and arguments addressing the rejections of record along with a declaration under 37 C.F.R. 1.132.

The examiner mailed to applicant a FINAL Office action on July 31, 2006. Claims 1-29 and 36-49 remained withdrawn from consideration as being drawn to a nonelected invention. The rejection of claims 30-32 under 35 U.S.C. 112, second paragraph, was maintained. The rejection of claims 30-32 under 35 U.S.C. 112, first paragraph, was maintained. The rejection of claim 30 under 35 U.S.C. 102(b) as being anticipated by Mauro et al. was maintained. Claim 33 was newly rejected under 35 U.S.C. 102(b) as being anticipated by Beerse et al. Claims 33 and 35 were rejected under 35 U.S.C. 103(a) as being unpatentable over Beerse et al. Claim 34 was objected to as being dependent upon a rejected base claim. The examiner indicated that applicant's amendment necessitated the new ground(s) of rejection presented in the Office action.

On September 13, 2006, applicant responded with arguments addressing the rejections of record along with a declaration under 37 C.F.R. 1.132.

The examiner did not find applicant's arguments persuasive and mailed an advisory action on November 2, 2006.

A supplemental advisory action was mailed on January 16, 2007, in order to confirm that claims 33-35 had been canceled in order to place the application in better condition for Appeal.

Applicant filed a Notice of Appeal on January 17, 2007, and this petition on February 13, 2007, to review and withdraw the restriction requirement set forth on April 18, 2005.

On 23 April 2007, Applicants filed a response containing a request for continued examination.

On 1 May 2007, Applicants filed a copy of this petition.

DISCUSSION

The petition and filed history have been carefully considered.

Applicant argues that (1) the examiner has failed to provide an example wherein the method of Group III can be performed using a product that is materially different from the product of Group I. Applicant also argues that (2) the examiner does not describe an alternative process to the method of Group II for making the product of Group I.

Independent claims 30 and 33, claim 36, and claim 46 are representative of Groups I, II and III, respectively. Said claims read:

> 30. A pharmaceutical composition comprising a pharmaceutical carrier and at least one compound in isolated or purified form selected from the group consisting of cobaltocene-octomet and stigmastan-3,5-diene.
>
> 33. A pharmaceutical composition comprising a pharmaceutical carrier and at least one compound in an isolated or purified form selected from the group consisting of galoxolide, benzyl salicylate, eucalyptol, and α-pinene.
>
> 36. A method of preparing a composition having antimicrobial activity comprising extracting a plant material in an organic solvent, contacting the extracted material with a chromatographic separation system, and eluting the chromatographic separation system with a mobile polar phase to obtain a composition, wherein the plant material is from *Mammea Americana*, *Marchantia polymorpha*, or *Callistemon citrinus*, and wherein the composition has antimicrobial activity.
>
> 46. A method of inhibiting the growth of a mycobacterium, comprising administering a composition comprising a carrier and at least one compound selected from among cobaltocene octomet, stigmastan-3,5-diene, galoxolide, benzyl salicylate, eucalyptol, and α-pinene.

1. Applicant argues that the examiner has failed to provide an example wherein the method of Group III can be performed using a product that is materially different from the product of Group I.

Applicant's argument has been considered but is not persuasive. Group I and Group III are related as a product and a process of using the product. The method as claimed requires a composition comprising at least one compound selected from among cobaltocene octomet, stigmastan-3,5-diene, galoxolide, benzyl salicylate, eucalyptol, and α-pinene. A product and a process of using the product can be shown to be distinct inventions if either or both of the following can be shown: (A) the process of using as claimed can be practiced with another materially different product; or (B) the product as claimed can be used in a materially different process.

In the instant case, the recited products have several different uses. For example, α-pinene is used as a pest control agent (Shore et al. Journal of Chemical Ecology (1996), Vol. 22, pages 2187-2196). Shore et al. investigated the response of ambrosia beetles to ethanol and α-pinene used with the pheromone lineatin in funnel and drainpipe traps. Treatments that included α-pinene with the pheromone, either with or without ethanol, caught significantly more beetles than those with the pheromone alone. Eucalyptol is used as an alternative solvent to chloroform for softening gutta-percha for removal from obturated root canals (Hunter et al. J. Endod. (1991), Vol. 17, pages 310-311), while galoxolide and benzyl salicylate are used in fragrance and detergent compositions (Behan et al. US 5,501,805).

2. Applicant argues that the examiner does not describe an alternative process to the method of Group II for making the product of Group I.

Applicant's argument has been considered but is not persuasive. Group II and Group I are related as a process of making and product made. A process of making and a product made by the process can be shown to be distinct inventions if either or both of the following can be shown: (A) that the process as claimed is not an obvious process of making the product and the process as claimed can be used to make another materially different product; or (B) that the product as claimed can be made by another materially different process.

In the instant case, the product (α-pinene) can be made by a materially different process such as steam distillation of pine rosin as taught by Rodrigues et al. J. Chem. Eng. Data (1995), Vol. 40, pages 1193-1195 (Rodrigues).

The examiner has properly restricted between product and process of making the product and a process of using the product. Per MPEP 821.04(b), should all claims directed to the elected invention become in condition for allowance, the examiner will consider the process claims which depend from or otherwise require all the limitations of the allowable product claims for rejoinder.

DECISION

The petition is **DENIED** for the reasons set forth above.

This application will be forwarded to the examiner to prepare an action consistent with this decision and to consider the papers filed on 23 April 2007.

Any request for reconsideration must be filed within two (2) months of the mailing date of this decision.

Should there be any questions about this decision, please contact Quality Assurance Specialist/Program Manager Julie Burke, by letter addressed to Director, Technology Center 1600, at the address listed above, or by telephone at 571-272-1600 or by facsimile sent to the general Office facsimile number, 571-273-8300.

Bruce Kisliuk
Director, Technology Center 1600
jb/pl

UNITED STATES PATENT AND TRADEMARK OFFICE

Commissioner for Patents
United States Patent and Trademark Office
P.O. Box 1450
Alexandria, VA 22313-1450
www.uspto.gov

STAAS & HALSEY LLP
SUITE 700
1201 NEW YORK AVENUE, N.W.
WASHINGTON DC 20005

COPY MAILED

JUL 13 2007

OFFICE OF PETITIONS

ON PETITION

In re Application of :
Shuichi Matsumoto et al :
Application No. 10/320,519 :
Filed: December 17, 2002 :
Attorney Docket No. 1095.1247 :

This is a decision on the petition, filed July 13, 2007, under 37 CFR 1.313(c)(2) to withdraw the above-identified application from issue after payment of the issue fee.

The petition is **GRANTED.**

The above-identified application is withdrawn from issue for consideration of a submission under 37 CFR 1.114 (request for continued examination). See 37 CFR 1.313(c)(2).

Petitioner is advised that the issue fee paid on June 11, 2007 in the above-identified application cannot be refunded. If, however, the above-identified application is again allowed, petitioner may request that it be applied towards the issue fee required by the new Notice of Allowance.[1]

Telephone inquiries should be directed to the undersigned at (571) 272-3208.

The examiner of Technology Center AU 3714 will consider the request for continued examination under 37 CFR 1.114.

Karen Creasy

Karen Creasy
Petitions Examiner
Office of Petitions

[1] The request to apply the issue fee to the new Notice may be satisfied by completing and returning the new Issue Fee Transmittal Form PTOL-85(b), which includes the following language thereon: "Commissioner for Patents is requested to apply the Issue Fee and Publication Fee (if any) or re-apply any previously paid issue fee to the application identified above." Petitioner is advised that, whether a fee is indicated as being due or not, the Issue Fee Transmittal Form **must** be completed and timely submitted to avoid abandonment. Note the language in bold text on the first page of the Notice of Allowance and Fee(s) Due (PTOL-85).

UNITED STATES PATENT AND TRADEMARK OFFICE

Commissioner for Patents
United States Patent and Trademark Office
P.O. Box 1450
Alexandria, VA 22313-1450
www.uspto.gov

LEONARD & PROEHL, PROF. LLC
3500 SOUTH FIRST AVENUE CIRCLE
SUITE 250
SIOUX FALLS, SD 57105

COPY MAILED

SEP 27 2006

OFFICE OF PETITIONS

In re Application of :
Dennis Bradwell :
Application No. 10/320,563 : DECISION ON PETITION
Filed: December 13, 2002 :
Attorney Docket No. 22-0264 :

This is a decision on the petition under the unintentional provisions of 37 CFR 1.137(b), filed April 20, 2006, to revive the above-identified application.

The petition is **GRANTED**.

This application became abandoned for failure to timely pay the issue fee on or before June 2, 2005, as required by the Notice of Allowance and Fee(s) Due, mailed March 2, 2005. Accordingly, the date of abandonment of this application is June 3, 2005.

The petition satisfies the requirements of 37 CFR 1.137(b) in that petitioner has supplied (1) the reply in the form of payment of the issue fee of $700; (2) the petition fee of $750; and (3) a proper statement of unintentional delay. Accordingly, the submission of the issue fee is accepted as having been unintentionally delayed. A Notice of Abandonment was mailed on October 17, 2005.

The application file does not indicate a change of address has been filed in this case, although the address given on the petition differs from the address of record. If appropriate, a change of address should be filed in this case in accordance with MPEP 601.03. A courtesy copy of this decision is being mailed to the address noted on the petition. However, until otherwise instructed, all future correspondence regarding this application will be mailed solely to the address of record.

Telephone inquiries concerning this decision should be directed to the undersigned at (571) 272-3218.

This application is being referred to Publishing Division for processing into a patent.

Frances Hicks
Petitions Examiner
Office of Petitions

cc:

Jeffrey A. Proehl
P O Box 5027
Sioux Falls, SD 57117-5027

UNITED STATES PATENT AND TRADEMARK OFFICE

UNITED STATES DEPARTMENT OF COMMERCE
United States Patent and Trademark Office
Address: COMMISSIONER FOR PATENTS
P.O. Box 1450
Alexandria, Virginia 22313-1450
www.uspto.gov

TROP, PRUNER & HU, P.C.
1616 S. VOSS ROAD, SUITE 750
HOUSTON, TX 77057-2631

Mail Date: 04/21/2010

Applicant	: Keith Russell Edwards	: DECISION ON REQUEST FOR
Patent Number	: 7583619	: RECALCULATION of PATENT
Issue Date	: 09/01/2009	: TERM ADJUSTMENT IN VIEW
Appliction No	: 10/320,574	: OF WYETH AND NOTICE OF INTENT TO
Filed	: 12/16/2002	: ISSUE CERTIFICATE OF CORRECTION
		:

The Request for Recalculation is **GRANTED** to the extent indicated.

The patent term adjustment has been determined to be **1256** days. The USPTO will *sua sponte* issue a certificate of correction reflecting the amount of PTA days determined by the recalculation.

Prior to the issuance of the certificate of correction, the USPTO will afford patentee an opportunity to be heard and request reconsideration. Accordingly, patentee has **one month or thirty (30) days**, whichever is longer, to file a request for reconsideration of this patent term adjustment calculation. See 35 U.S.C. 154(b)(3)(B)(ii) and 37 CFR 1.322(a)(4). No extensions of time will be granted under 37 CFR 1.136.

Patentee should use document code PET.OP if electronically filing a request for reconsideration of this patent term adjustment calculation. The patentee must also include the information required by 37 CFR 1.705(b)(2) and the fee required by 37 CFR 1.18(e). If patentee does not file a timely request for reconsideration of this patent term adjustment calculation including the information required by 37 CFR 1.705(b)(2) and the fee required by 37 CFR 1.18(e), the USPTO will issue a certificate of correction reflecting the PTA determination noted above.

Patentee should be aware that in order to preserve the right to review in the United States District Court for the District of Columbia of the USPTO patent term adjustment determination, patentee must ensure that he or she also take the steps required under 35 U.S.C. 154(b)(4)(A) in a timely manner. Nothing in the request for recalculation should be construed as providing an alternative time frame for commencing a civil action under 35 U.S.C. 154(b)(4)(A).

Any questions concerning this decision should be directed to the Office of Patent Legal Administration at 571-272-7702.

UNITED STATES PATENT AND TRADEMARK OFFICE

COMMISSIONER FOR PATENTS
UNITED STATES PATENT AND TRADEMARK OFFICE
P.O. BOX 1450
ALEXANDRIA, VA 22313-1450
www.uspto.gov

MAR 04 2003

FAEGRE & BENSON LLP
2200 Wells Fargo Center
90 South Seventh Street
Minneapolis MN 55402-3901

In re Application of :
H. Duane Saunders et al. :
Serial No.: 10/320,589 : DECISION ON PETITION
Filed: December 16, 2002 :
For: Portable Cervical Traction Device :

This is in response to applicants' petition filed February 11, 2003, to make the above-identified application special under the provisions of 37 CFR 1.102(d), based on infringement.

Applicant has satisfied the provisions set forth in M.P.E.P. 708.02, II. Therefore the petition is **GRANTED**.

The application will be forwarded to the examiner for action on the merits commensurate with this decision.

Should there be any questions with regard to this letter please contact John Kittle by letter addressed to the Director, Technology Center 3700/2900, Washington, DC 20231, or by telephone at (703) 308-0873 or by facsimile transmission at (703) 308-3139.

John E. Kittle
Director
Technology Center 3700/2900

SPE RESPONSE FOR CERTIFICATE OF CORRECTION

Paper No.: _____

DATE : May 18, 2006

TO SPE OF : ART UNIT 2616 (S.P.E. Ahmad Matar)

SUBJECT : Request for Certificate of Correction for Appl. No.: 10/320636 Patent No.: 6904140

Please respond to this request for a certificate of correction within 7 days.

Please review the requested changes/corrections as shown in the **COCIN** document(s) in the IFW application image. No new matter should be introduced, nor should the scope or meaning of the claims be changed.

Please complete the response (see below) and forward the completed response to scanning using document code **COCX**.

STACY POWELL

Certificates of Correction Branch

703-308-9390 ext. 120

Thank You For Your Assistance

The request for issuing the above-identified correction(s) is hereby:

Note your decision on the appropriate box.

- ☐ **Approved** — All changes apply.
- ☑ **Approved in Part** — **Specify below** which changes **do not** apply.
- ☐ **Denied** — State the reasons for denial below.

Comments: The 2/2/06 Certificate of Correction has been approved. The 5/18/06 Certificate of Correction is not approved since the 3/17/03 IDS as supplied by applicant does not include US 6,665,723 or its serial number at all, there is also no record that it was submitted and considered by the examine

Wing Fu Chan 2614 5/30/06

SPE **Art Unit**

UNITED STATES PATENT AND TRADEMARK OFFICE

Commissioner for Patents
United States Patent and Trademark Office
P.O. Box 1450
Alexandria, VA 22313-1450
www.uspto.gov

BANNER & WITCOFF
1001 G ST NW
SUITE 1100
WASHINGTON DC 20001-4597

COPY MAILED

DEC 3 0 2005

OFFICE OF PETITIONS

In re	: DECISION REGARDING
Krishnamurthi, et al.	: PATENT TERM ADJUSTMENT
Application No. 10/320,637	:
Filed: December 17, 2002	:
Attorney Docket No. 005288.00076	:

This is a decision on the "APPLICATION FOR PATENT TERM ADJUSTMENT UNDER 37 C.F.R. §1.705", filed November 14, 2005. Applicants request that the initial determination of patent term adjustment under 35 U.S.C. 154(b) be corrected from zero (0) days to three hundred nineteen (319) days.

The application for patent term adjustment is **GRANTED**.

The Office has updated the PAIR screen to reflect that the correct Patent Term Adjustment (PTA) determination at the time of the mailing of the Notice of Allowance is **three hundred nineteen (319) days**. A copy of the updated PAIR screen, showing the correct determination, is enclosed.

On October 20, 2005, the Office mailed the Determination of Patent Term Adjustment under 35 U.S.C. 154(b) in the above-identified application. The Notice stated that the patent term adjustment (PTA) to date is zero (0) days. On November 14, 2005,

applicants timely[1] submitted the instant application for patent term adjustment, asserting that the correct number of days of PTA at the time of the mailing of the Notice of Allowance is three hundred nineteen (319) days.

Applicants state that the patent issuing from the application is not subject to a terminal disclaimer.

Applicants assert entitlement to a patent term adjustment of three hundred nineteen (319) days on the basis that the PTO improperly assessed applicants a delay of one hundred ninety (190) days for responding to an Office action mailed on April 29, 2004. Applicants assert that they filed a response on July 7, 2004, not on February 4, 2005.

The Office initially determined a patent term adjustment of zero (0) days based on an adjustment for PTO delay of seventy-two (72) days pursuant to 35 U.S.C. 154(b)(1)(A)(i) and 37 C.F.R. § 1.703(a)(1) and thirty-eight (38) days pursuant to 35 U.S.C. 154(b)(1)(A)(ii) and 37 C.F.R. § 1.703(a)(2), reduced by Applicants' delay of one hundred ninety (190) days pursuant to 35 U.S.C. 154(b)(2)(C)(ii) and 37 C.F.R. §1.704(b). The adjustment of 190 days is at issue.

The adjustment of 190 days has been found to be incorrect. Applicants have submitted a copy of a postcard receipt for the instant application, itemizing an "Amendment", and bearing a USPTO date stamp of July 7, 2004. A postcard receipt which itemizes and properly identifies the items which are being filed serves as prima facie evidence of receipt in the USPTO of all the items listed thereon on the date stamped thereon by the USPTO.[2] Accordingly, it is concluded that Applicants timely filed a reply in response to the April 29, 2004 Office action on July 7, 2004, and therefore should not have been assessed a delay of one hundred ninety (190) days.

Furthermore, in view of applicants' response filed July 7, 2004, the Office should have been assessed two hundred forty-seven (247) days of PTO delay pursuant to 37 C.F.R. §1.703(a)(2), because the next Office action was not mailed until July 12, 2005.

---

[1] Applicants filed the PTA application with the issue fee.

[2] MPEP 503.

Applicant's request that additional PTA be accorded to the extent the patent does not issue before December 17, 2005 is being held in abeyance. The Office will be able to determine any additional PTA once the issue date is established.[3]

In view thereof, the correct determination of patent term adjustment at the time of the mailing of the Notice of Allowance is **three hundred nineteen (319) days** (319 (72 + 247) days of PTO delay and 0 days of applicant delay).

Tthe $200.00 fee set forth in 37 C.F.R. §1.18(e) has been charged to Deposit Account No. 19-0733, as authorized.

The application file is being forwarded to the Office of Patent Publication for processing into a patent.

Telephone inquiries specific to this matter should be directed to Cliff Congo, Petitions Attorney, at (571)272-3207.

Kery A Fries for

Karin Ferriter
Senior Legal Advisor
Office of Patent Legal Administration
Office of Deputy Commissioner
for Patent Examination Policy

Enclosure: Copy of Revised PAIR Screen

[3] Applicants should note that if an application is entitled to an adjustment under 35 U.S.C. 154(b)(1)(B), the entire period of pendency before the Office except for periods excluded under 35 U.S.C. (b)(1)(B)(i)-(iii), and not just the period beginning three years after the actual filing date of the application, is the period of delay under 35 U.S.C. 154(b)(1)(B) in determining whether periods of delay overlap under 35 U.S.C. 154(b)(2)(A).

UNITED STATES PATENT AND TRADEMARK OFFICE

COMMISSIONER FOR PATENTS
UNITED STATES PATENT AND TRADEMARK OFFICE
P.O. BOX 1450
ALEXANDRIA, VA 22313-1450
www.uspto.gov

MAILED

JUL 15 2004

Office of the Director
Group 3600

Office of the Staff Judge Advocate
U.S. Army Medical Research and Materiel Command
Attn: MCMR-JA (Ms Elizabeth Arwine)
504 Scott Street
Fort Detrick MD 21702-5012

In re Application of SMEED, ERIC M.
Appl. No.: 10/320,638
Filed: December 17, 2002
For: Critical Care Platform for Litters

DECISION ON PETITION UNDER 37 CFR 1.59

This is a decision on the petition under 37 CFR 1.59(b), filed March 17, 2003, to expunge information from the above identified application.

The petition is granted.

Petitioner requests that a document entitled Ferno Aviation, filed March 17, 2003, be expunged from the record. Petitioner states that either (A) that the information contains trade secret material, proprietary material and/or material that is subject to a protective order which has not been made public; or (B) that the information submitted was unintentionally submitted and the failure to obtain its return would cause irreparable harm to the party who submitted the information or to the party in interest on whose behalf the information was submitted, and the information has not otherwise been made public. The petition fee set forth in 37 CFR 1.17(h) has been paid.

The information in question has been determined by the undersigned to not be material to the examination of the instant application.

Applicant is required to retain the expunged material(s) for the life of any patent which issues on the above-identified application.

The expunged material has been removed from the official file.

Donald T. Hajec
Patent Technology Center 3600
(703) 306-4180

UNITED STATES PATENT AND TRADEMARK OFFICE

Commissioner for Patents
United States Patent and Trademark Office
P.O. Box 1450
Alexandria, VA 22313-1450
www.uspto.gov

MORGAN LEWIS & BOCKIUS LLP
1111 PENNSYLVANIA AVENUE NW
WASHINGTON DC 20004

COPY MAILED
OCT 0 2 2006
OFFICE OF PETITIONS

In re Patent No. 7,056,698	:	DECISION ON
Levitt, et al.	:	PATENT TERM ADJUSTMENT
Issue Date: June 6, 2006	:	AND
Application No. 10/320,646	:	NOTICE OF INTENT
Filed: December 17, 2002	:	TO ISSUE
Attorney Docket No. 036870-5057-02	:	CERTIFICATE OF CORRECTION

This is a decision on the "PETITION FOR PATENT TERM ADJUSTMENT UNDER 37 C.F.R. 1.705(d)", filed July 6, 2006. Patentees request that the patent term adjustment indicated on the patent be corrected from three hundred thirty-six (336) days to three hundred fifty-three (353) days.

The petition is **GRANTED**.

The patent term adjustment indicated on the patent is to be corrected by issuance of a certificate of correction showing a revised Patent Term Adjustment of **three hundred fifty-three (353)** days.

On June 6, 2006, the above-identified application matured into U.S. Patent No. 7,056,698. The instant request for reconsideration filed July 6, 2006 was timely filed within two months of the date the patent issued. See § 1.705(d). Patentees fail to state whether the instant patent is subject to a terminal disclaimer.

The Office determined a patent term adjustment of three hundred thirty-six (336) days based on an adjustment for PTO delay of three hundred sixty-six (366) days pursuant to 35 U.S.C.

154(b)(1)(A)(i) and 37 C.F.R. § 1.703(a)(1), and thirteen (13) days pursuant to 35 U.S.C. 154(b)(1)(A)(iv) and 37 C.F.R. § 1.703(a)(6), reduced by Applicant's delays of twenty-six (26) days pursuant to 35 U.S.C. 154(b)(2)(C)(ii) and 37 C.F.R. § 1.704(b) and seventeen (17) days pursuant to 35 U.S.C. 154(b)(2)(C)(i) and 37 C.F.R. § 1.704(c)(10). The adjustment of seventeen (17) days is at issue.

Applicant contends, and a review of the file confirms, that no "CLAIM FOR PRIORITY" was actually filed in the instant application. Rather, the claim was filed in application No. 11/320,646, not 10/320,646. The document has been placed into the correct file. Accordingly, no applicant delay should have been assessed for this filing.

In view thereof, the correct determination of PTA is three hundred fifty-three (353) days (379 (366+13) days of PTO delay, reduced by 26 days of applicant delay).

Receipt of the $200.00 fee set forth in 37 C.F.R. § 1.18(e) is acknowledged.

The application file is being forwarded to the Certificates of Correction Branch for issuance of a certificate of correction in order to rectify the error regarding the patent term information. See 35 U.S.C. § 254 and 37 C.F.R. § 1.322. The certificate of correction will indicate that the term of the above-identified patent is extended or adjusted by **three hundred fifty-three (353)** days, subject to any disclaimers.

Telephone inquiries specific to this matter should be directed to Cliff Congo, Petitions Attorney, at (571)272-3207.

Kery A. Fries

Kery Fries
Senior Legal Advisor
Office of Patent Legal Administration
Office of Deputy Commissioner
for Patent Examination Policy

Enc: draft certificate of correction

UNITED STATES PATENT AND TRADEMARK OFFICE

DRAFT CERTIFICATE OF CORRECTION

PATENT : 7,056,698 B2

DATED : June 6, 2006

INVENTOR(S) : Levitt, et al.

It is certified that error appears in the above-identified patent and that said Letters Patent is hereby corrected as shown below:

On the cover page,

[*] Notice: Subject to any disclaimer, the term of this patent is extended or adjusted under 35 USC 154(b) by (336) days

Delete the phrase "by 336 days" and insert – by 353 days—

Day : Saturday
Date: 9/30/2006

PALM INTRANET

Time: 12:57:48

PTA Calculations for Application: 10/320646

Application Filing Date:	12/17/2002	PTO Delay (PTO):	379
Issue Date of Patent:	06/06/2006	Three Years:	0
Pre-Issue Petitions:	0	Applicant Delay (APPL):	43
Post-Issue Petitions:	0	Total PTA (days):	353
PTO Delay Adjustment:	17		

File Contents History

Number	Date	Contents Description	PTO	APPL	START
52	09/30/2006	ADJUSTMENT OF PTA CALCULATION BY PTO	34		
51	09/30/2006	ADJUSTMENT OF PTA CALCULATION BY PTO		17	
47.5	05/17/2006	PTA 36 MONTHS			
47	06/06/2006	PATENT ISSUE DATE USED IN PTA CALCULATION	13		32
46	05/08/2006	EXPORT TO FINAL DATA CAPTURE			
45	05/05/2006	DISPATCH TO FDC			
44	05/05/2006	MAIL EXAMINER'S AMENDMENT			
43	05/05/2006	MAIL ACKNOWLEDGEMENT OF PRIORITY PAPERS			
42	05/04/2006	ACKNOWLEDGEMENT OF PRIORITY PAPERS			
41	04/19/2006	REQUEST FOR FOREIGN PRIORITY (PRIORITY PAPERS MAY BE INCLUDED)		17	43
40	04/27/2006	FINISHED INITIAL DATA CAPTURE			
39	04/28/2006	SEQUENCE FORWARDED TO PUBS ON TAPE			
38	04/05/2006	WORKFLOW - QUERY REQUEST - FINISH			
37	03/24/2006	TC RETURN TO PUBS			
36	03/27/2006	EXAMINER'S AMENDMENT COMMUNICATION			
35	03/01/2006	PUBS CASE REMAND TO TC			
34	03/02/2006	WORKFLOW - QUERY REQUEST - BEGIN			
33	02/15/2006	APPLICATION IS CONSIDERED READY FOR ISSUE			
32	01/24/2006	ISSUE FEE PAYMENT VERIFIED			
31	01/24/2006	ISSUE FEE PAYMENT RECEIVED			
30	10/31/2005	EXPORT TO INITIAL DATA CAPTURE			
29	10/24/2005	MAIL NOTICE OF ALLOWANCE			
28	10/20/2005	ISSUE REVISION COMPLETED			

27	10/20/2005	NOTICE OF ALLOWANCE DATA VERIFICATION COMPLETED			
26	10/19/2005	NOTICE OF ALLOWABILITY			
25	09/22/2005	DATE FORWARDED TO EXAMINER			
24	09/15/2005	RESPONSE AFTER NON-FINAL ACTION		26	22
23	09/15/2005	REQUEST FOR EXTENSION OF TIME - GRANTED			
22	05/20/2005	MAIL NON-FINAL REJECTION			
21	05/18/2005	NON-FINAL REJECTION			
20	04/21/2005	DATE FORWARDED TO EXAMINER			
19	04/18/2005	RESPONSE TO ELECTION / RESTRICTION FILED			
18	04/18/2005	REQUEST FOR EXTENSION OF TIME - GRANTED			
17	02/04/2005	PRELIMINARY AMENDMENT			
16	02/17/2005	MAIL RESTRICTION REQUIREMENT	366		-1
15	02/16/2005	REQUIREMENT FOR RESTRICTION / ELECTION			
14	02/04/2005	WORKFLOW INCOMING AMENDMENT IFW			
13	10/20/2003	IFW TSS PROCESSING BY TECH CENTER COMPLETE			
12	04/25/2003	CASE DOCKETED TO EXAMINER IN GAU			
11	04/11/2003	APPLICATION DISPATCHED FROM OIPE			
10	03/31/2003	APPLICATION IS NOW COMPLETE			
9	03/25/2003	ADDITIONAL APPLICATION FILING FEES			
8	03/25/2003	APPLICANT HAS SUBMITTED NEW DRAWINGS TO CORRECT CORRECTED PAPERS PROBLEMS			
7	03/05/2003	CORRECTED PAPER			
6	02/24/2003	CLEARED BY L&R (LARS)			
5	01/27/2003	IFW SCAN & PACR AUTO SECURITY REVIEW			
4	12/31/2002	IFW SCAN & PACR AUTO SECURITY REVIEW			
3	12/30/2002	CRF IS GOOD TECHNICALLY / ENTERED INTO DATABASE			
2	12/17/2002	CRF DISK HAS BEEN RECEIVED BY PREEXAM / GROUP / PCT			
1	12/17/2002	INITIAL EXAM TEAM NN			

Search Another: Application# [ ] Search

EXPLANATION OF PTA CALCULATION

EXPLANATION OF PTE CALCULATION

To go back use Back button on your browser toolbar.

Back to PALM | ASSIGNMENT | OASIS | Home page

UNITED STATES PATENT AND TRADEMARK OFFICE

Commissioner for Patents
United States Patent and Trademark Office
P.O. Box 1450
Alexandria, VA 22313-1450
www.uspto.gov

December 13, 2007

Richard G. Besha
NIXON & VANDERHYE P.C.
1100 North Glebe Road, 8th Floor
Arlington, VA 22201

Patent No: 6817183 B2
Application No.: 10/320664
Applicant: Roberto Modi, et al
Issued: November 16, 2004
Title: **LIQUID FUEL INJECTION FOR BURNERS OF GAS TURBINES**

Request for Certificate of Correction:

Consideration has been given to your request for the issuance of a certificate of correction for the above- identified patent under the provisions of Rule 1.322.

Respecting the alleged error on the title page item (54), it is the practice to exclude words such as **"A", "IMPROVED", IMPROVEMENTS IN", "NEW", OR "NOVEL"**, as the first word in the title of the invention. Inspection of the application file reveals it is printed in accordance with the record. There, being no fault on the part of the Patent Office, it has no authority to issue certificate of correction (s) under United States Code of Federal Regulation (C.F.R.) 1.322.

In view of the foregoing, your request in this matter is hereby **denied**.

Virginia Tolbert
For Cecelia Newman, Supervisor
Decisions and Certificate of Correction
(703) 305-8309 or 305-1882

vt

UNITED STATES PATENT AND TRADEMARK OFFICE

COMMISSIONER FOR PATENTS
UNITED STATES PATENT AND TRADEMARK OFFICE
P.O. BOX 1450
ALEXANDRIA, VA 22313-1450
WWW.USPTO.GOV

Paper No. 4

PARK & SUTTON LLP
3255 WILSHIRE BLVD
SUITE 1110
LOS ANGELES, CA 90010

COPY MAILED

MAY 13 2003

OFFICE OF PETITIONS

In re Application of :
Robert D. Grafton :
Application No.: 10/320,673 : ON PETITION
Filed: December 17, 2002 :
Attorney Docket No.: 1468.01 :

This a decision on the petition filed April 2, 2003, which will be treated as request to withdraw the "Notice of Omitted Items in a Nonprovisional Application" (the "Notice") mailed February 28, 2003, in the above-cited application.

The petition is **dismissed.**

The application was filed on December 17, 2002. The application included informal drawings, however; none of the figures encompassed in the drawings were labeled "Figure 8" and "Figure 9" as identified in the specification. Accordingly on February 28, 2003, the Initial Patent Examination Division mailed the Notice stating, in pertinent part, that the application had been accorded a filing date of December 17, 2002, but that Figures 8 and 9 appeared to have been omitted.

In response, the present petition was filed. Petitioner therein argued that Figures 8 and 9 were filed on December 17, 2002. In support, the petition is accompanied by a copy of the applicant's postcard receipt that acknowledges receipt in the PTO on December 17, 2002, of "informal drawings", a declaration authored by Luis Torres, and a complete copy of the application papers, including Figures 8 and 9. Petitioner alleges that Figures 8 and 9 were filed with the original application papers.

The arguments have been considered, but are not persuasive. The Patent and Trademark Office (the "Office) file is the official record of the papers originally filed in this application. A review of the application file reveals that informal drawings were filed on December 17, 2002, but no figures labeled 8 or 9 were found among the original application papers filed. An applicant alleging that a paper was filed in the Office and later misplaced has the burden of proving the allegation by a preponderance of the evidence. The fact that the declaration of Mr. Torres asserts that figures labeled 8 and 9 were among the informal drawings originally filed is not more persuasive than the actual figures shown to have been received by the official file.

Further, applicant's postcard does not support the allegation that figures labeled 8 and 9 were among the drawings filed because the postcard receipt only indicates that informal drawings were filed. The postcard does not provide the number of sheets of drawings filed on December 17, 2002. Section 503 of the Manual of Patent Examining Procedure provides, in pertinent part that:

> The identifying data on the postcard should be so complete as to clearly identify the item for which receipt is requested. . . The postcard should also identify the type

> of paper being filed . . . and the number of pages being submitted. If a new application is being filed, all parts of the application submitted should be separately listed on the postcard, e.g., the number of pages of specification (including written description, claims, and abstract), number of claims, number of sheets of drawings, number of pages of oath/ declaration number of pages of coversheet (provisional application).
>
> The postcard receipt will not serve as prima facie evidence of receipt of any item which is not adequately itemized on the postcard. For example, merely listing on the postcard "a complete application" will not serve as a proper receipt for each of the required components of an application . . .

Absent figures labeled 8 and 9, the official file still contains "informal drawings." Without further corroborating evidence, the fact that the postcard receipt establishes that informal drawings were filed does not establish that Figures 8 and 9 were among the informal drawings filed. Petitioner is cautioned to adhere to the guidance of Section 503 of the MPEP when preparing a postcard for any future filings.

The petition is dismissed.

The Figures 8 and 9 filed April 2, 2003, are noted; they will not be entered at this time. The application is being returned to the Office of Initial Patent Examination for further processing with a filing date of December 17, 2002. Thereafter, the application will be forwarded to the appropriate group art unit for consideration by the examiner of the instant petition as a preliminary amendment requesting entry of Figures 8 and 9 filed December 17, 2002.

Telephone inquiries concerning this matter may be directed to Kenya A. McLaughlin, Petitions Attorney, at (703) 305-0010.

Kenya A. McLaughlin
Petitions Attorney
Office of Petitions

Beverly M. Flanagan
Supervisory Petitions Examiner
Office of Petitions

UNITED STATES PATENT AND TRADEMARK OFFICE

COMMISSIONER FOR PATENTS
UNITED STATES PATENT AND TRADEMARK OFFICE
P.O. BOX 1450
ALEXANDRIA, VA 22313-1450
www.uspto.gov

Paper No. 6

NORMAN CASS
54 FOSTER RD.
SOUTHWICK, MA 01077

COPY MAILED

APR 2 6 2004

OFFICE OF PETITIONS

In re Application of :
Norman Cass :
Application No. 10/320,695 : ON PETITION
Filed: December 17, 2002 :
Attorney Docket No. :

This is a decision on the petition under 37 CFR 1.137(a), filed March 24, 2004, to revive the above-identified application.

The petition is **DISMISSED**.

Any further petition to revive the above-identified application must be submitted within TWO (2) MONTHS from the mail date of this decision. Extensions of time under 37 CFR 1.136(a) are permitted. The reconsideration request should include a cover letter entitled "Petition under 37 CFR 1.137." This is **not** a final agency action within the meaning of 5 U.S.C. § 704.

This application became abandoned for failure to timely submit a reply to the Notice to File Missing Parts of Nonprovisional Application (Notice) on or before March 30, 2003.

A grantable petition to revive an abandoned application under 37 CFR 1.137(a) must be accompanied by: (1) the required reply (unless previously filed), which may be met by the filing of a continuing application in a nonprovisional application abandoned for failure to prosecute, but must be the payment of the issue fee or any outstanding balance thereof in an application or patent, abandoned or lapsed for failure to pay the issue fee or any portion thereof; (2) the petition fee required by 37 CFR 1.17(l); (3) an adequate showing to the satisfaction of the Commissioner that the entire delay in filing the required reply from the due date for the reply until the filing of a grantable petition pursuant to 37 CFR 1.137(a) was unavoidable; and (4) a terminal disclaimer (and fee as set forth in 37 CFR 1.20(d)) for an application filed prior to June 8, 1995. This petition lacks items (1) and (3).

As to item (1), petitioner has not provided a complete reply to the Notice mailed January 30, 2003. The Notice requires an additional basic filing fee of $163.00 -- two extra claims fee over 20 ($18.00) and multiple dependent claim fee ($145.00). A copy of the Notice is enclosed.

The showing of record is not sufficient to establish to the satisfaction of the Commissioner that

the delay was unavoidable within the meaning of 35 U.S.C. § 133 and 37 CFR 1.137(a). See MPEP 711.03(c)(III)(C)(2) for a discussion of the requirements for a showing of unavoidable delay.

As to item (3), petitioner asserts that the delay was caused by nonreceipt of the Notice dated January 30, 2003. A review of the written record indicates no irregularity in the mailing of the Office action, and in the absence of any irregularity there is a strong presumption that the Office action was properly mailed to the applicant at the address of record. This presumption may be overcome by a showing that the Office action was not in fact received. In this regard, the showing required to establish the failure to receive the Office action must consist of a statement from petitioner stating that the Office action was not received and attesting to the fact that a search of the file jacket was conducted. If petitioner does not maintain a record of receipt of papers from the Office, then petitioner must explain the procedures and controls utilized for the handling of his most important correspondence or Office action upon receipt.

If petitioner cannot provide evidence of the nature required above or simply does not wish to, petitioner may wish to consider filing a petition filing a petition under the unintentional provisions of 37 CFR 1.137(b). Public Law 97-247, which revised patent and trademark fees, provides for the revival of an "unintentionally" abandoned application without a showing that the delay in prosecution or in late payment of an issue fee was "unavoidable." See 37 CFR 1.137(b) in effect as of December 1, 1997. *Note Changes to Patent Practice and Procedure; Final Rule Notice, 62 Fed. Reg. 53131 (October 10, 1997), 1203 Off. Gaz. Patent Office 63 (October 21, 1997).* An "unintentional" petition must be accompanied by the $650.00 petition fee.

The filing of a petition under the unintentional standard cannot be intentionally delayed and therefore should be filed promptly. A person seeking revival due to unintentional delay cannot make a statement that the delay was unintentional unless the entire delay, including the delay from the date it was discovered that the application was abandoned until the filing of the petition to revive under 37 CFR 1.137(b), was unintentional. A statement of unintentional delay is not appropriate if petitioner intentionally delayed the filing of a petition for revival under 37 CFR 1.137(b).

Further correspondence with respect to this matter should be addressed as follows:

By mail: Mail Stop PETITION
Commissioner for Patents
Post Office Box 1450
Alexandria, VA 22313-1450

By hand: Crystal Plaza Two, Lobby
2011 South Clark Place
Room 1B03
Arlington, VA 22202

By fax: (703) 872-9306
Attn: Office of Petitions

Telephone inquiries concerning this decision should be directed to Wan Laymon at (703) 306-5685.

Frances Hicks
Lead Petitions Examiner
Office of Petitions
Office of the Deputy Commissioner
for Patent Examination Policy

Enclosure: Notice

UNITED STATES PATENT AND TRADEMARK OFFICE

Commissioner for Patents
United States Patent and Trademark Office
P.O. Box 1450
Alexandria, VA 22313-1450
www.uspto.gov

Paper No. 9

NORMAN CASS
54 FOSTER RD.
SOUTHWICK, MA 01077

COPY MAILED

MAY 0 7 2004

OFFICE OF PETITIONS

In re Application of :
Norman Cass :
Application No. 10/320,695 : ON PETITION
Filed: December 17, 2002 :
Attorney Docket No. :

This is a decision on the petition under 37 CFR 1.137(b), filed April 28, 2004, to revive the above-identified application.

The petition is **GRANTED**.

The above-identified application became abandoned for failure to reply in a timely manner to the Notice to File Missing Parts of Nonprovisional Application (Notice) mailed January 30, 2003. The Notice set a period for reply of two (2) months from the mail date of the Notice. No extensions of time under the provisions of 37 CFR 1.136(a) were obtained. Accordingly, the above-identified application became abandoned on March 31, 2003.

Telephone inquiries concerning this decision should be directed to Wan Laymon at (703) 306-5685.

The application file is being forwarded to the Office of Initial Patent Examination for preexamination processing.

Wan Laymon
Petitions Examiner
Office of Petitions
Office of the Deputy Commissioner
for Patent Examination Policy

UNITED STATES PATENT AND TRADEMARK OFFICE

Commissioner for Patents
United States Patent and Trademark Office
P.O. Box 1450
Alexandria, VA 22313-1450
www.uspto.gov

MARTIN D. MOYNIHAN
PRTSI, INC.
P. O. BOX 16446
ARLINGTON VA 22215

COPY MAILED

MAY 22 2008

OFFICE OF PETITIONS

In re Application of :
Eduardo N. Mitrani :
Application No. 10/320,703 : ON PETITION
Filed: December 17, 2002 :
Attorney Docket No: 25397

This is a decision on the petition filed March 31, 2008, for withdrawal of terminal disclaimer filed February 5, 2008. The petition is being treated under 37 CFR 1.182.

The petition is **DISMISSED**.

The examiner responsible for the above-identified application has indicated that the terminal disclaimer applies to the current claims and that if the terminal disclaimer were withdrawn, double patenting would still exist. Accordingly, the terminal disclaimer can not be withdrawn.

The petition fee in the amount of $400.00 has been applied.

This matter is being referred to Technology Center 1632 for further examination in due course.

Telephone inquiries concerning this matter may be directed to the undersigned Petitions Attorney at (571) 272-3212.

Patricia Faison-Ball

Patricia Faison-Ball
Senior Petitions Attorney
Office of Petitions

UNITED STATES PATENT AND TRADEMARK OFFICE

Commissioner for Patents
United States Patent and Trademark Office
P.O. Box 1450
Alexandria, VA 22313-1450
www.uspto.gov

MARTIN D. MOYNIHAN
PRTSI, INC.
P. O. BOX 16446
ARLINGTON VA 22215

COPY MAILED

DEC 1 1 2008

OFFICE OF PETITIONS

In re Application of :
Eduardo N. Mitrani :
Application No. 10/320,703 : ON PETITION
Filed: December 17, 2002 :
Attorney Docket No: 25397

This is a decision on the request for reconsideration filed October 17, 2008, for withdrawal of terminal disclaimer filed February 5, 2008. The petition is being treated under 37 CFR 1.182.

The petition is **DISMISSED**.

A petition filed March 31, 2008 for the withdrawal of a terminal disclaimer filed February 5, 2008 was dismissed in a decision mailed May 22, 2008.

After review of the instant request for reconsideration, the examiner responsible for the above-identified application has indicated that the claims of application 10/320,703 still have a double patenting issue and therefore the Terminal Disclaimer would still be necessary.

In view thereof, the terminal disclaimer can not be withdrawn.

This matter is being referred to Technology Center 1632 for further examination in due course.

Telephone inquiries concerning this matter may be directed to the undersigned Petitions Attorney at (571) 272-3212.

Patricia Faison-Ball

Patricia Faison-Ball
Senior Petitions Attorney
Office of Petitions

UNITED STATES PATENT AND TRADEMARK OFFICE

UNITED STATES DEPARTMENT OF COMMERCE
United States Patent and Trademark Office
Address: COMMISSIONER FOR PATENTS
P.O. Box 1450
Alexandria, Virginia 22313-1450
www.uspto.gov

CROMPTON, SEAGER & TUFTE, LLC
1221 NICOLLET AVENUE
SUITE 800
MINNEAPOLIS, MN 55403-2420

Mail Date: 04/21/2010

Applicant	: Gil Vardi	: DECISION ON REQUEST FOR
Patent Number	: 7591846	: RECALCULATION of PATENT
Issue Date	: 09/22/2009	: TERM ADJUSTMENT IN VIEW
Appliction No	: 10/320,719	: OF WYETH AND NOTICE OF INTENT TO
Filed	: 12/17/2002	: ISSUE CERTIFICATE OF CORRECTION
		:

The Request for Recalculation is **GRANTED** to the extent indicated.

The patent term adjustment has been determined to be **942** days. The USPTO will *sua sponte* issue a certificate of correction reflecting the amount of PTA days determined by the recalculation.

Prior to the issuance of the certificate of correction, the USPTO will afford patentee an opportunity to be heard and request reconsideration. Accordingly, patentee has **one month or thirty (30) days**, whichever is longer, to file a request for reconsideration of this patent term adjustment calculation. See 35 U.S.C. 154(b)(3)(B)(ii) and 37 CFR 1.322(a)(4). No extensions of time will be granted under 37 CFR 1.136.

Patentee should use document code PET.OP if electronically filing a request for reconsideration of this patent term adjustment calculation. The patentee must also include the information required by 37 CFR 1.705(b)(2) and the fee required by 37 CFR 1.18(e). If patentee does not file a timely request for reconsideration of this patent term adjustment calculation including the information required by 37 CFR 1.705(b)(2) and the fee required by 37 CFR 1.18(e), the USPTO will issue a certificate of correction reflecting the PTA determination noted above.

Patentee should be aware that in order to preserve the right to review in the United States District Court for the District of Columbia of the USPTO patent term adjustment determination, patentee must ensure that he or she also take the steps required under 35 U.S.C. 154(b)(4)(A) in a timely manner. Nothing in the request for recalculation should be construed as providing an alternative time frame for commencing a civil action under 35 U.S.C. 154(b)(4)(A).

Any questions concerning this decision should be directed to the Office of Patent Legal Administration at 571-272-7702.

UNITED STATES PATENT AND TRADEMARK OFFICE

Commissioner for Patents
United States Patent and Trademark Office
P.O. Box 1450
Alexandria, VA 22313-1450
www.uspto.gov

JUL 2 2 2004

DCM

In re Application of	:	
Jones, et al.	:	
Serial Number: 10/320,729	:	DECISION
Filed: December 16, 2002	:	ON
For: AUTONOMOUS FLOOR-CLEANING ROBOT	:	PETITION

This is a decision on the Petition to Make Special because of Actual Infringement, filed under sections 37 C.F.R. 1.102 and 708.02 II of the MPEP on March 30, 2004, regarding the above-referenced application. The fee required under 37 CFR 1.17(h) has been paid. The petition meets the requirements of section 708.02 II of the MPEP.

If the examiner finds any interfering application for the same subject matter, the examiner should consider such application simultaneously with this case and should state in the official letter of such application that the examiner is taking it out of its turn because of a possible interference.

Should an appeal be taken or this case become involved in interference, then consideration of the appeal or interference will be expedited by the Patent and Trademark Office, contingent upon diligent prosecution by applicant.

After allowance, this case will be given priority for printing. See MPEP 1309.

The petition is **GRANTED.**

Marian C. Knode

Marian C. Knode, Special Programs Examiner
Technology Center 1700
Chemical and Materials Engineering

David A. Jacobs
GESMER UPDEGROVE, LLP
40 BROAD ST
SUITE 300
BOSTON MA 02109

UNITED STATES PATENT AND TRADEMARK OFFICE

Commissioner for Patents
United States Patent and Trademark Office
P.O. Box 1450
Alexandria, VA 22313-1450
www.uspto.gov

LUCASH, GESMER & UPDEGROVE, LLP
40 BROAD ST
SUITE 300
BOSTON MA 02109

COPY MAILED
FEB 16 2010

In re Patent No. 6,883,201 :
Issue Date: April 26, 2005 :
Application No. 10/320,729 : NOTICE
Filed: December 17, 2002 :
Attorney Docket No. ISR-012 US :

This is a notice regarding your request for acceptance of a fee deficiency submission under 37 CFR 1.28 filed October 9, 2009. On September 1, 1998, the Court of Appeals for the Federal Circuit held that 37 CFR 1.28(c) is the sole provision governing the time for correction of the erroneous payment of the issue fee as a small entity. **See DH Technology v. Synergystex International, Inc. 154 F.3d 1333, 47 USPQ2d 1865 (Fed. Cir. Sept. 1, 1998).**

The Office no longer investigates or rejects original or reissue applications under 37 CFR 1.56. **1098 Off. Gaz. Pat. Office 502 (January 3, 1989)**. Therefore, nothing in this Notice is intended to imply that an investigation was done.

Your fee deficiency submission under 37 CFR 1.28 is hereby accepted. The petition is **GRANTED**.

This application is no longer entitled to small entity status. Accordingly, all future fees paid in this application must be paid at the large entity rate.

The application file does not indicate a change of address has been filed in this case, although the address given on the petition differs from the address of record. A change of address should be filed in this case in accordance with MPEP 601.03. A courtesy copy of this decision is being mailed to the address noted on the petition. However, until otherwise instructed, all future correspondence regarding this application will be mailed solely to the address of record.

This file is being forwarded to Files Repository.

Telephone inquiries related to this decision should be directed to the Kimberly Inabinet at (571) 272-4618.

/Kimberly Inabinet/

Kimberly Inabinet
Petitions Examiner
Office of Petitions

cc: Fish & Richardson, P.C.
225 Franklin Street
Boston, MA 02110

UNITED STATES PATENT AND TRADEMARK OFFICE

Commissioner for Patents
United States Patent and Trademark Office
P.O. Box 1450
Alexandria, VA 22313-1450
www.uspto.gov

JUN 21 2005

SCHWEGMAN, LUNDBERG, WOESSNER & KLUTH, P.A.
P.O. BOX 2938
MINNEAPOLIS MN 55402-0938

In re Application of	:
Sohail Malik	:
Serial No.: 10/320,730	: WITHDRAWAL OF ATTORNEY
Filed: December 16, 2002	:
Attorney Docket No.: 1443.042	:

This is in response to applicants' attorneys' request, filed June 1, 2005, to withdraw from representation in the above identified application.

37 CFR 10.40 Withdrawal from employment.
(b) Mandatory withdrawal . A practitioner representing a client before the Office shall withdraw from employment if:
(1) The practitioner knows or it is obvious that the client is bringing a legal action, commencing a proceeding before the Office, conducting a defense, or asserting a position in litigation or any proceeding pending before the Office, or is otherwise having steps taken for the client, merely for the purpose of harassing or maliciously injuring any person;
(2) The practitioner knows or it is obvious that the practitioner's continued employment will result in violation of a Disciplinary Rule;
(3) The practitioner's mental or physical condition renders it unreasonably difficult for the practitioner to carry out the employment effectively; or
(4) The practitioner is discharged by the client.
(c) Permissive withdrawal. If paragraph (b) of this section is not applicable, a practitioner may not request permission to withdraw in matters pending before the Office unless such request or such withdrawal is because:
(1) The petitioner's client:
(i) Insists upon presenting a claim or defense that is not warranted under existing law and cannot be supported by good faith argument for an extension, modification, or reversal of existing law;
(ii) Personally seeks to pursue an illegal course of conduct;
(iii) Insists that the practitioner pursue a course of conduct that is illegal or that is prohibited under a Disciplinary Rule;
(iv) By other conduct renders it unreasonably difficult for the practitioner to carry out the employment effectively;
(v) Insists, in a matter not pending before a tribunal, that the practitioner engage in conduct that is contrary to the judgment and advice of the practitioner but not prohibited under the Disciplinary Rule; or
(vi) Has failed to pay one or more bills rendered by the practitioner for an unreasonable period of time or has failed to honor an agreement to pay a retainer in advance of the performance of legal services.
(2) The practitioner's continued employment is likely to result in a violation of a Disciplinary Rule;
(3) The practitioner's inability to work with co-counsel indicates that the best interests of the client likely will be served by withdrawal;
(4) The practitioner's mental or physical condition renders it difficult for the practitioner to carry out the employment effectively;
(5) The practitioner's client knowingly and freely assents to termination of the employment; or

(6) The practitioner believes in good faith, in a proceeding pending before the Office, that the Office will find the existence of other good cause for withdrawal.

Applicants' attorney has provided no reason for withdrawal, as required.

The request to withdraw is **DISMISSED**.

Should there be any questions with regard to this letter please contact William R. Dixon, Jr. by letter addressed to the Director, Technology Center 1600, PO BOX 1450, ALEXANDRIA, VA 22313-1450, or by telephone at 571-272-0519 or by facsimile transmission at Office facsimile number, 571-273-8300.

William R. Dixon, Jr.
Special Program Examiner
Technology Center 1600

RECEIVED
CENTRAL FAX CENTER
JUN 0 1 2005

PTO/SB/83 (04-05)
Approved for use through 11/30/2005. OMB 0651-0035
U.S. Patent and Trademark Office, U.S. DEPARTMENT OF COMMERCE
Under the Paperwork Reduction Act of 1995, no persons are required to respond to a collection of information unless it displays a valid OMB control number.

REQUEST FOR WITHDRAWAL AS ATTORNEY OR AGENT AND CHANGE OF CORRESPONDENCE ADDRESS

Application Number	10/320,730
Filing Date	December 16, 2002
First Named Inventor	Sohail MALIK
Art Unit	1623
Examiner Name	Elli Peselev
Attorney Docket Number	1443.042US1

To: Commissioner for Patents
P.O. Box 1450
Alexandria, VA 22313-1450

Please withdraw me as attorney or agent for the above identified patent application, and

- ☐ all the attorneys/agents of record.
- ☐ the attorneys/agents (with registration numbers) listed on the attached paper(s), or
- ☑ the attorneys/agents associated with Customer Number 21186

NOTE: This box can only be checked when the power of attorney of record in the application is to all the practitioners associated with a customer number.

The reasons for this request are:

NOT Approved

WILLIAM R. DIXON, JR.
SPECIAL PROGRAM EXAMINER

CORRESPONDENCE ADDRESS

1. ☐ The correspondence address is NOT affected by this withdrawal.
2. ☑ Change the correspondence address and direct all future correspondence to:

☐ The address associated with Customer Number:

OR

☑ Firm or Individual Name	Kimberly-Clark Worldwide, Inc.				
Address	Attn.: Nancy M. Klembus, Esq. 1400 Holcomb Ridge Road - Bldg. 200/1				
City	Roswell	State	GA	Zip	30076-2199
Country	USA				
Telephone	770-587-8612	Email	nancy.klembus@kcc.com		
Signature	Robin A. Chadwick				
Name	Robin A. Chadwick	Registration No.	36,477		
Date	June 1, 2005	Telephone No.	516-795-6820		

NOTE: Withdrawal is effective when approved rather than when received. Unless there are at least 30 days between approval of withdrawal and the expiration date of a time period for response or possible extension period, the request to withdraw is normally disapproved.

This collection of information is required by 37 CFR 1.36. The information is required to obtain or retain a benefit by the public which is to file (and by the USPTO to process) an application. Confidentiality is governed by 35 U.S.C. 122 and 37 CFR 1.11 and 1.14. This collection is estimated to take 12 minutes to complete, including gathering, preparing, and submitting the completed application form to the USPTO. Time will vary depending upon the individual case. Any comments on the amount of time you require to complete this form and/or suggestions for reducing this burden, should be sent to the Chief Information Officer, U.S. Patent and Trademark Office, U.S. Department of Commerce, P.O. Box 1450, Alexandria, VA 22313-1450. DO NOT SEND FEES OR COMPLETED FORMS TO THIS ADDRESS. SEND TO: Commissioner for Patents, P.O. Box 1450, Alexandria, VA 22313-1450.

If you need assistance in completing the form, call 1-800-PTO-9199 and select option 2.

UNITED STATES PATENT AND TRADEMARK OFFICE

UNITED STATES DEPARTMENT OF COMMERCE
United States Patent and Trademark Office
Address: COMMISSIONER FOR PATENTS
P.O. Box 1450
Alexandria, Virginia 22313-1450
www.uspto.gov

APPLICATION NO.	FILING DATE	FIRST NAMED INVENTOR	ATTORNEY DOCKET NO.	CONFIRMATION NO.
10/320,745	12/17/2002	Elena Lialiamou	NC16970 US-NP	2999

73658 7590 12/22/2008

Nokia, Inc.
6021 Connection Drive, MS 2-5-520
Irving, TX 75039

EXAMINER	
COLBERT, ELLA	

ART UNIT	PAPER NUMBER
3696	

MAIL DATE	DELIVERY MODE
12/22/2008	PAPER

Please find below and/or attached an Office communication concerning this application or proceeding.

The time period for reply, if any, is set in the attached communication.

UNITED STATES PATENT AND TRADEMARK OFFICE

Commissioner for Patents
United States Patent and Trademark Office
P.O. Box 1450
Alexandria, VA 22313-1450
www.uspto.gov

DEC 23 2008

SQUIRE, SANDERS & DEMPSEY L.L.P.
8000 TOWERS CRESCENT DRIVE
14TH FLOOR
VIENNA, VA 22182-6212

In re Application of: Elena Lialiamou	:	PETITION TO WITHDRAWAL
Application No. 10/320,745	:	OF RESTRICTION
Filed: December 17, 2002	:	REQUIREMENT
Attorney Docket No.: 059643.00150	:	
For: MESSAGING SERVICES FOR PRE-PAY USERS	:	

This is in response to applicant's petition filed on August 11, 2008 to have the restriction requirement withdrawn.

The petition is **GRANTED.**

The petitioner sets forth that the Restriction Requirement of October 9, 2007, was traversed by Applicant and improperly maintained by the examiner.

A review of the file record indicates that in the February 11, 2008 Office Action the Examiner maintained the Restriction Requirement but failed to properly respond to applicant's traversal.

Applicant's traversal states that the inventions are improperly categorized as combination/subcombination. A review of the claims finds that the claims are combinations usable together. Accordingly, the Restriction will be withdrawn.

A response to the February 11, 2008 was filed concurrently with the instant petition. Accordingly, the application will be forwarded to the examiner for consideration of the August 11, 2008 response.

Any questions dealing with this decision should be directed to Thomas Dixon at (571) 272-6803.

Summary: ***Petition Granted***

Wynn Coggins, Director
Patent Technology Center 3600
(571)-272-5350

WC/td:12/01/08

UNITED STATES PATENT AND TRADEMARK OFFICE

Commissioner for Patents
United States Patent and Trademark Office
P.O. Box 1450
Alexandria, VA 22313-1450
www.uspto.gov

WESTMAN CHAMPLIN & KELLY, P.A.
SUITE 1400 - INTERNATIONAL CENTRE
900 SECOND AVENUE SOUTH
MINNEAPOLIS MN 55402-3319

COPY MAILED

JUL 13 2005

OFFICE OF PETITIONS

In re Application of :
Felix J. Schuda :
Application No. 10/320,756 : ON PETITION
Filed: December 16, 2002 :
Attorney Docket No. C34.12-0034 :

This is a decision on the petition, filed July 12, 2005, under 37 CFR 1.313(c)(2) to withdraw the above-identified application from issue after payment of the issue fee.

The petition is **GRANTED.**

The above-identified application is withdrawn from issue for consideration of a submission under 37 CFR 1.114 (request for continued examination). See 37 CFR 1.313(c)(2).

Petitioner is advised that the issue fee paid on June 24, 2005 in the above-identified application cannot be refunded. If, however, the above-identified application is again allowed, petitioner may request that it be applied towards the issue fee required by the new Notice of Allowance.[1]

Telephone inquiries should be directed to the undersigned at (571) 272-3208.

The examiner of Technology Center AU 2828 will consider the request for continued examination under 37 CFR 1.114.

Karen Creasy

Karen Creasy
Petitions Examiner
Office of Petitions
Office of the Deputy Commissioner
for Patent Examination Policy

---

[1] The request to apply the issue fee to the new Notice may be satisfied by completing and returning the new Issue Fee Transmittal Form PTOL-85(b), which includes the following language thereon: "Commissioner for Patents is requested to apply the Issue Fee and Publication Fee (if any) or re-apply any previously paid issue fee to the application identified above." Petitioner is advised that, whether a fee is indicated as being due or not, the Issue Fee Transmittal Form **must** be completed and timely submitted to avoid abandonment. Note the language in bold text on the first page of the Notice of Allowance and Fee(s) Due (PTOL-85).

UNITED STATES PATENT AND TRADEMARK OFFICE

Commissioner for Patents
United States Patent and Trademark Office
P.O. Box 1450
Alexandria, VA 22313-1450
www.uspto.gov

FOLEY HOAG LLP
PATENT GROUP, WORLD TRADE CENTER WEST
155 SEAPORT BOULEVARD
BOSTON, MA 02110

COPY MAILED

APR 20 2005

OFFICE OF PETITIONS

In re Application of :
Christopher Midgley et al :
Application No. 10/320,762 : DECISION GRANTING PETITION
Filed: December 16, 2002 : UNDER 37 CFR 1.313(c)(2)
Attorney Docket No. NTK-004.02 :

This is a decision on the petition, filed April 8, 2005, under 37 CFR 1.313(c)(2) to withdraw the above-identified application from issue after payment of the issue fee.

The petition is **GRANTED**.

The above-identified application is withdrawn from issue for consideration of a submission under 37 CFR 1.114 (request for continued examination). See 37 CFR 1.313(c)(2).

Petitioner is advised that the issue fee paid on February 25, 2005 in the above-identified application cannot be refunded. If, however, the above-identified application is again allowed, petitioner may request that it be applied towards the issue fee required by the new Notice of Allowance.[1]

In accordance with the request under 37 CFR 1.27(g)(2), small entity status is removed and no longer applies to this application. All future fees must be paid at the large entity rate.

Telephone inquiries should be directed to the undersigned at (571) 272-3218.

This matter is being referred to Technology Center AU 2162 for processing of the request for continued examination under 37 CFR 1.114 and for consideration of the concurrently filed Information Disclosure Statement.

Frances Hicks
Petitions Examiner
Office of Petitions
Office of the Deputy Commissioner
for Patent Examination Policy

---

[1] *The request to apply the issue fee to the new Notice may be satisfied by completing and returning the new Issue Fee Transmittal Form PTOL-85(b), which includes the following language thereon: "Commissioner for Patents is requested to apply the Issue Fee and Publication Fee (if any) or re-apply any previously paid issue fee to the application identified above." Petitioner is advised that, whether a fee is indicated as being due or not, the Issue Fee Transmittal Form* ***must*** *be completed and timely submitted to avoid abandonment. Note the language in bold text on the first page of the Notice of Allowance and Fee(s) Due (PTOL-85).*

UNITED STATES PATENT AND TRADEMARK OFFICE

Commissioner for Patents
United States Patent and Trademark Office
P.O. Box 1450
Alexandria, VA 22313-1450
www.uspto.gov

FOLEY HOAG LLP
PATENT GROUP, WORLD TRADE CENTER WEST
155 SEAPORT BLVD
BOSTON, MA 02110

COPY MAILED

NOV 0 7 2005

OFFICE OF PETITIONS

In re Application of :
Christopher Midgley et al :
Application No. 10/320,762 : DECISION GRANTING PETITION
Filed: December 16, 2002 : UNDER 37 CFR 1.313(c)(2)
Attorney Docket No. NTK-004.02 :

This is a decision on the petition, filed November 3, 2005, under 37 CFR 1.313(c)(2) to withdraw the above-identified application from issue after payment of the issue fee.

The petition is **GRANTED**.

The above-identified application is withdrawn from issue for consideration of a submission under 37 CFR 1.114 (request for continued examination). See 37 CFR 1.313(c)(2).

Petitioner is advised that the issue fee paid on October 6, 2005 in the above-identified application cannot be refunded. If, however, the above-identified application is again allowed, petitioner may request that it be applied towards the issue fee required by the new Notice of Allowance.[1]

Telephone inquiries should be directed to the undersigned at (571) 272-3218.

This matter is being referred to Technology Center AU 2162 for processing of the request for continued examination under 37 CFR 1.114 and for consideration of the Information Disclosure Statement.

Frances Hicks
Petitions Examiner
Office of Petitions

---

[1] *The request to apply the issue fee to the new Notice may be satisfied by completing and returning the new Issue Fee Transmittal Form PTOL-85(b) (along with any balance due or the amount due at the time of payment), which includes the following language thereon: "Commissioner for Patents is requested to apply the Issue Fee and Publication Fee (if any) or re-apply any previously paid issue fee to the application identified above." Petitioner is advised that, whether a fee is indicated as being due or not, the Issue Fee Transmittal Form* ***must*** *be completed and timely submitted to avoid abandonment. Note the language in bold text on the first page of the Notice of Allowance and Fee(s) Due (PTOL-85).*

UNITED STATES PATENT AND TRADEMARK OFFICE

Commissioner for Patents
United States Patent and Trademark Office
P.O. Box 1450
Alexandria, VA 22313-1450
www.uspto.gov

FOLEY HOAG LLP
PATENT GROUP, WORLD TRADE CENTER WEST
155 SEAPORT BOULEVARD
BOSTON, MA 02110

COPY MAILED
MAY 02 2006
OFFICE OF PETITIONS

In re Application of :
Christopher Midgley et al :
Application No. 10/320,762 : DECISION GRANTING PETITION
Filed: December 16, 2002 : UNDER 37 CFR 1.313(c)(2)
Attorney Docket No. NTK-004.02 :

This is a decision on the petition, filed April 28, 2006, under 37 CFR 1.313(c)(2) to withdraw the above-identified application from issue after payment of the issue fee.

The petition is **GRANTED**.

The above-identified application is withdrawn from issue for consideration of a submission under 37 CFR 1.114 (request for continued examination). See 37 CFR 1.313(c)(2).

Petitioner is advised that the issue fee paid on December 27, 2005 in the above-identified application cannot be refunded. If, however, the above-identified application is again allowed, petitioner may request that it be applied towards the issue fee required by the new Notice of Allowance.[1]

Telephone inquiries should be directed to the undersigned at (571) 272-3218.

This matter is being referred to Technology Center AU 2162 for processing of the request for continued examination under 37 CFR 1.114 and for consideration of the Information Disclosure Statement.

Frances Hicks
Petitions Examiner
Office of Petitions

C:\Documents and Settings\FHicks\My Documents\470\may9\320762.wpd

---

[1] *The request to apply the issue fee to the new Notice may be satisfied by completing and returning the new Part B – Fee(s) Transmittal Form (along with any balance due at the time of submission), which includes the following language thereon: "The Director of the USPTO is requested to apply the Issue Fee and Publication Fee (if any) or to re-apply any previously paid issue fee in the application identified above. Petitioner is advised that, whether a fee is indicated as being due or not, the Issue Fee Transmittal Form* ***must*** *be completed and timely submitted to avoid abandonment. Note the language in bold text on the first page of the Notice of Allowance and Fee(s) Due (PTOL-85).*

UNITED STATES PATENT AND TRADEMARK OFFICE

Commissioner for Patents
United States Patent and Trademark Office
P.O. Box 1450
Alexandria, VA 22313-1450
www.uspto.gov

FOLEY HOAG LLP
PATENT GROUP, WORLD TRADE CENTER WEST
155 SEAPORT BOULEVARD
BOSTON, MA 02110

COPY MAILED
MAY 11 2006
OFFICE OF PETITIONS

In re Application of :
Christoper Midgley et al :
Application No. 10/320,762 : NOTICE
Filed: December 16, 2002 :
Attorney Docket No. NTK-004.02 :

This is a notice regarding your request filed August 2, 2004 for acceptance of a fee deficiency submission under 37 CFR 1.28. On September 1, 1998, the Court of Appeals for the Federal Circuit held that 37 CFR 1.28(c) is the sole provision governing the time for correction of the erroneous payment of the issue fee as a small entity. **See DH Technology v. Synergystex International, Inc. 154 F.3d 1333, 47 USPQ2d 1865 (Fed. Cir. Sept. 1, 1998).**

The Office no longer investigates or rejects original or reissue applications under 37 CFR 1.56. **1098 Off. Gaz. Pat. Office 502 (January 3, 1989).** Therefore, nothing in this Notice is intended to imply that an investigation was done.

Your fee deficiency submission under 37 CFR 1.28 is hereby **ACCEPTED.**

This application is no longer entitled to small entity status. Accordingly, all future fees paid in this application must be paid at the large entity rate.

Inquiries related to this communication should be directed to the undersigned at (572) 272-3218.

Frances Hicks
Petitions Examiner
Office of Petitions

UNITED STATES PATENT AND TRADEMARK OFFICE

Commissioner for Patents
United States Patent and Trademark Office
P.O. Box 1450
Alexandria, VA 22313-1450
www.uspto.gov

ABELMAN, FRAYNE & SCHWAB
10th Floor
666 Third Ave.
New York, NY 10017-5621

COPY MAILED

MAR 30 2007

OFFICE OF PETITIONS

In re Application of

Weiss, et al.

Application No. 10/320,766

Filed: December 16, 2002

Attorney Docket No. 206.010

: DECISION ON PETITION

This is a decision on the petition to withdraw the holding of abandonment under 37 CFR 1.181(a), filed on March 7, 2007.

The petition is **granted**.

This application was held abandoned on December 15, 2006, after no reply was received to the Notice of Allowance and Issue Fee Due mailed September 14, 2006. The notice set forth a statutory period for reply of three months from its mailing date. The instant petition was filed on March 7, 2007. Petitioner maintains that the notice of September 14, 2006, was never received and provides a copy of the relevant docket records as proof of the same.

Section 711.03(c)(II) of the *Manual of Patent Examining Procedure* ("MPEP") provides that in order to establish non-receipt of an Office action so as prove that the imposition of a holding of abandonment is improper, petitioner must: 1) provide a statement to the Office indicating that the Office action was not received by petitioner; 2) include in the statement an attestation to the fact that a review of the file jacket and docket records maintained by petitioner indicates that the Office action was not received; and 3) provide a copy of the docket record where the non-received Office communication would have been entered had it been received and docketed.

Petitioner has met the burden of proof as established by Section 711.03(c)(II) of the MPEP. The holding of abandonment is, therefore, withdrawn.

The fee of $250.00 remitted will be refunded, in due course.

The application file will be directed to the Technology Center 2600, GAU 2611 for further processing including remailing of the Notice of Allowance and Issue Fee Due and resetting of the time period set for reply.

Questions concerning this decision should be directed to the undersigned at (571) 272-3222.

Kenya A. McLaughlin
Petitions Attorney
Office of Petitions

UNITED STATES PATENT AND TRADEMARK OFFICE

COMMISSIONER FOR PATENTS
UNITED STATES PATENT AND TRADEMARK OFFICE
P.O. BOX 1450
ALEXANDRIA, VA 22313-1450
www.uspto.gov

Paper No. 7

COPY MAILED

AUG 19 2003

OFFICE OF PETITIONS

PENNIE AND EDMONDS
1155 AVENUE OF THE AMERICAS
NEW YORK, NY 10036-2711

In re Application of
Zamudio et al.
Application No. 10/320,797
Filed: December 16, 2002
Attorney Docket No.: 10182-021-999

ON PETITION

This is a decision on the petition filed June 3, 2003, requesting in effect, that a Notice to File Missing Parts in a Nonprovisional Application ("Notice") mailed May 1, 2003, be withdrawn.

The application was filed on December 16, 2002. However, on May 1, 2003, the Office of Initial Patent Examination (OIPE) mailed a Notice stating that the application had been accorded a filing date of December 16, 2002 but page 1 of the specification description and claims) appeared to have been omitted.

In response, the present petition was filed wherein Petitioner contends page 1 of the specification was filed on December 16, 2002. In support, the petition is accompanied by a copy of applicants' return postcard which lists 128 pages of specification. The petition is further accompanied by a copy of page 1 of the specification.

Applicant's postcard receipt is prima facie evidence that 128 pages of specification (description and claims) were received on December 16, 2002, but page 1 is not present in the file. Hence, it is clear that the papers for this application were mishandled by the Office. Therefore, it is concluded that page 1 of the specification was received on December 16, 2002, as shown in counsel's file, and later misplaced in the office.

The petition is Granted. The petition fee of $130.00 is being credited to deposit account 16-1150.

Since page 1 of 128 of the original specification cannot be located in the Office, page 1 of 128 of the specification supplied on June 3, 2003, will be used for processing and examination purposes.

The application will be returned to the Office of Initial Patent Examination for further processing with a filing date of December 16, 2002, using substitute page 1 and 128 of the specification supplied on June 3, 2003.

Telephone inquiries related to this decision may be directed to Petitions Attorney Charlema R. Grant at (703) 306-0251.

Beverly M. Flanagan
Supervisory Petitions Examiner
Office of Petitions

UNITED STATES PATENT AND TRADEMARK OFFICE

Commissioner for Patents
United States Patent and Trademark Office
P.O. Box 1450
Alexandria, VA 22313-1450
www.uspto.gov

Patent Documentation Center
Xerox Corporation
Xerox Square, 20th Floor
100 Clinton Ave. S.
Rochester NY 14644

In re Application of
MCELVAIN, JON S.
Serial No.: **10/320,832**
Filed: **December 16, 2002**
For: **METHOD FOR DARKNESS CORRECTION OF TRAPPED PIXELS**

DECISION ON PETITION
ACCEPTANCE OF COLOR DRAWINGS

This is a decision on the petition under 37 C.F.R. § 1.84(a)(2), filed, December 16, 2002, requesting acceptance of color drawings.

A grantable petition under 37 C.F.R. §1.84(a)(2) must be accompanied by a fee set forth under 37 C.F.R. § 1.17(h), 3(three) set of the color drawings in question, and the specification must contain, or be amended to contain, the following language as the first paragraph in that portion of the specification relating to the brief description of the drawings:

"The file of this patent contains at least one drawing executed in color. Copies of this patent with color drawing(s) will be provided by the Patent and Trademark Office upon request and payment of the necessary fee."

Applicant has not provided an amendment including the statement above.

Accordingly, the petition is **DENIED**.

Kenneth A. Wieder
Quality Assurance Specialist
Technology Center 2600
Communications

UNITED STATES PATENT AND TRADEMARK OFFICE

Commissioner for Patents
United States Patent and Trademark Office
P. O. Box 1450
Alexandria, VA 22313-1450
www. uspto. gov

PITNEY BOWES INC.
35 WATERVIEW DRIVE
P.O. BOX 3000
MSC 26-22
SHELTON, CT 06484-8000

COPY MAILED

JUN 3 0 2004

OFFICE OF PETITIONS

In re Application of :
Denis J. Stemmle :
Application No. 10/320,888 : ON PETITION
Filed: December 17, 2002 :
Attorney Docket No. F-601

This is a decision on the petition, filed June 24, 2004, which is being treated as a petition under 37 CFR 1.313(c)(2) to withdraw the above-identified application from issue after payment of the issue fee.

The petition is **GRANTED**.

The above-identified application is withdrawn from issue for consideration of a submission under 37 CFR 1.114 (request for continued examination). See 37 CFR 1.313(c)(2).

Petitioner is advised that the issue fee paid on May 17, 2004 in the above-identified application cannot be refunded. If, however, the above-identified application is again allowed, petitioner may request that it be applied towards the issue fee required by the new Notice of Allowance.[1]

Telephone inquiries should be directed to Irvin Dingle at (703) 306-5684.

The file will be forwarded to Technology Center AU 3653 for processing of the request for continued examination under 37 CFR 1.114 and for consideration of the concurrently filed Information Disclosure Statement.

Irvin Dingle
Petitions Examiner
Office of Petitions
Office of the Deputy Commissioner
for Patent Examination Policy

[1] The request to apply the issue fee to the new Notice may be satisfied by completing and returning the new Issue Fee Transmittal Form PTOL-85(b), which includes the following language thereon: Commissioner for Patents is requested to apply the Issue Fee and Publication Fee (if any) or re-apply any previously paid issue fee to the application identified above. Petitioner is advised that, whether a fee is indicated as being due or not, the Issue Fee Transmittal Form **must** be completed and timely submitted to avoid abandonment. Note the language in bold text on the first page of the Notice of Allowance and Fee(s) Due (PTOL-85).

Best Available Copy

UNITED STATES PATENT AND TRADEMARK OFFICE

COMMISSIONER FOR PATENTS
UNITED STATES PATENT AND TRADEMARK OFFICE
P.O. BOX 1450
ALEXANDRIA, VA 22313-1450
www.uspto.gov

Date : June 30, 2004

TO : Director, Office of Patent Publication

FROM : Office of the Deputy Commissioner
for Patent Examination Policy

SUBJECT : Withdrawal from Issue of Application No. 10/320,888

Applicant(s) : Denis J. Stemmle
Application No. : 10/320,888
Filed : December 17, 2002

The above-identified application has been assigned Patent No. 6,758,472 and an issue date of July 6, 2004.

It is hereby directed that this application be withdrawn from issue at the request of the applicant.

Do not refund the issue fee.

The following erratum should be published in the Official Gazette if the above-identified application is published in the OG of : July 6, 2004.

"All reference to Patent No. 6,758,472 to Dennis J. Stemmle of for METHOD AND SYSTEM FOR HIGH SPEED DIGITAL METERING USING OVERLAPPING ENVELOPES appearing in the Official Gazette of July 6, 2004 should be deleted since no patent was granted."

Irvin Dingle
Petitions Examiner
Office of Petitions
Office of the Deputy Commissioner
for Patent Examination Policy

cc: Paul Harrison, Crystal Park 3-441 (FAX-306-2737)
Deneise Boyd, Crystal Park 2, Suite 1100 (FAX-308-5413)
Mary Louise McAskill, Crystal Park 3-910 (FAX 305-4372)
Niomi Farmer, Crystal Park 3-910 (FAX-305-4372)
Mary E. Johnson (Cookie), P/OCS, CM1-6D07
Duane Davis (CDS), CM1-6A07
Tamara K. Greene, PK3-910

Best Available Copy

UNITED STATES PATENT AND TRADEMARK OFFICE

COMMISSIONER FOR PATENTS
UNITED STATES PATENT AND TRADEMARK OFFICE
P.O. BOX 1450
ALEXANDRIA, VA 22313-1450
www.uspto.gov

Paper No. 11

PERKINS COIE LLP
PATENT-SEA
P O BOX 1247
SEATTLE, WA 98111-1247

COPY MAILED

JAN 13 2004

OFFICE OF PETITIONS

In re Application of :
Warren M. Farnworth :
Application No. 10/320,892 : DECISION GRANTING PETITION
Filed: December 16, 2002 : UNDER 37 CFR 313(c)(2)
Attorney Docket No. 108298514US2 :

This is a decision on the petition, filed January 8, 2004, under 37 CFR 1.313(c)(2) to withdraw the above-identified application from issue after payment of the issue fee.

The petition is **GRANTED**.

The above-identified application is withdrawn from issue for consideration of a submission under 37 CFR 1.114 (request for continued examination). See 37 CFR 1.313(c)(2).

Petitioner is advised that the issue fee paid on December 24, 2003 in the above-identified application cannot be refunded. If, however, the above-identified application is again allowed, petitioner may request that it be applied towards the issue fee required by the new Notice of Allowance.[1]

Telephone inquiries should be directed to the undersigned at (703) 305-8680.

Upon receipt of the file in the Office of Petitions, the file will be forwarded to Technology Center AU 2824 for processing of the request for continued examination under 37 CFR 1.114 and for consideration of the concurrently filed Information Disclosure Statement.

Frances Hicks
Petitions Examiner
Office of Petitions
Office of the Deputy Commissioner
for Patent Examination Policy

---

[1] The request to apply the issue fee to the new Notice may be satisfied by completing and returning the new Issue Fee Transmittal Form PTOL-85(b), which includes the following language thereon: "Commissioner for Patents is requested to apply the Issue Fee and Publication Fee (if any) or re-apply any previously paid issue fee to the application identified above." Petitioner is advised that, whether a fee is indicated as being due or not, the Issue Fee Transmittal Form **must** be completed and timely submitted to avoid abandonment. Note the language in bold text on the first page of the Notice of Allowance and Fee(s) Due (PTOL-85).

BEST AVAILABLE COPY

SPE RESPONSE FOR CERTIFICATE OF CORRECTION

Paper No.: _____

DATE : 7-26-05

TO SPE OF : ART UNIT 2824

SUBJECT : Request for Certificate of Correction on Patent No.: 6,841,423

A response is requested with respect to the accompanying request for a certificate of correction.

Please complete this form and return with file, within 7 days to:
Certificates of Correction Branch - PK 3-915
Palm location **7580** - Tel. No. 305-8309

With respect to the change(s) requested, correcting Office and/or Applicant's errors, should the patent read as shown in the certificate of correction? No new matter should be introduced, nor should the scope or meaning of the claims be changed.

Thank You For Your Assistance

Certificates of Correction Branch

The request for issuing the above-identified correction(s) is hereby:

Note your decision on the appropriate box.

- ☒ Approved — All changes apply.
- ☐ Approved in Part — Specify below which changes do not apply.
- ☐ Denied — State the reasons for denial below.

Comments:

ok to enter references.

RICHARD ELMS
SUPERVISORY PATENT EXAMINER
TECHNOLOGY CENTER 2800

8/8/05
SPE

2824
Art Unit

UNITED STATES PATENT AND TRADEMARK OFFICE

Commissioner for Patents
United States Patent and Trademark Office
P.O. Box 1450
Alexandria, VA 22313-1450
www.uspto.gov

Parker & DeStefano
Suite 300
300 Preston Avenue
Charlottesville VA 22902

COPY MAILED

AUG 2 8 2007

OFFICE OF PETITIONS

In re Application of :
Susan E. Plunkett et al. :
Application No. 10/320,895 : ON PETITION
Filed: December 17, 2002 :
Attorney Docket No. GC-505 :

This is a decision on the petition under 37 CFR 1.137(b), filed December 7, 2006, to revive the above-identified application.

The petition is **GRANTED**.

The application became abandoned for failure to submit formal drawings in a timely manner in reply to the Notice of Drawing Inconsistency with Specification, mailed October 27, 2005, which set a period for reply of one month or Thirty (30) days. Accordingly, this application became abandoned on November 28, 2005.

The petition satisfies the requirements of 37 CFR 1.137(b) in that petitioner has supplied (1) the reply in the form of formal drawings; (2) the petition fee of $750; and (3) an adequate statement of unintentional delay.

It is not apparent whether the person signing the statement of unintentional delay was in a position to have firsthand or direct knowledge of the facts and circumstances of the delay at issue. Nevertheless, such statement is being treated as having been made as the result of a reasonable inquiry into the facts and circumstances of such delay. See 37 CFR 10.18(b) and Changes to Patent Practice and Procedure; Final Rule Notice, 62 Fed. Reg. 53131, 53178 (October 10, 1997), 1203 Off. Gaz. Pat. Office 63, 103 (October 21, 1997). In the event that such an inquiry has not been made, petitioner must make such an inquiry. If such inquiry results in the discovery that it is not correct that the entire delay in filing the required reply from the due date for the reply until the filing of a grantable petition pursuant to 37 CFR 1.137(b) was unintentional, petitioner must notify the Office.

There is no indication that the person signing the petition was ever given a power of attorney to prosecute the application. If the person signing the petition desires to receive future correspondence regarding this application, the appropriate power of attorney document must be submitted. While a courtesy copy of this decision is being mailed to the person signing the petition, all future correspondence will be directed to the address currently of record until appropriate instructions are received.

Telephone inquiries concerning this decision should be directed to Terri Williams at (571) 272-2991.

The application file is being referred to the Office of Publications for issuance of into a patent.

Liana Walsh
Petitions Examiner
Office of Petitions

cc: **Kimberly O. Snead**
10363-A Democracy Lane
Fairfax, VA 22030

UNITED STATES PATENT AND TRADEMARK OFFICE

Commissioner for Patents
United States Patent and Trademark Office
P.O. Box 1450
Alexandria, VA 22313-1450
www.uspto.gov

COPY MAILED

APR 13 2007

OFFICE OF PETITIONS

AVAGO TECHNOLOGIES, LTD.
P.O. BOX 1920
DENVER CO 80201-1920

In re Application of :
SAY LEONG TAN :
Application No. 10/320,905 : ON PETITION
Filed: 12/16/2002 :
Attorney Docket No. 70004191-2 :

This is a decision on the petition under 37 CFR 1.137(b), filed on September 27, 2006, to revive the above-identified application. The petition was recently forwarded to the Office of Petitions for a decision on the merits. The Office sincerely apologizes for any inconvenience.

This application became abandoned as a result of the decision of May 17, 2006 by the Board of Patent Appeals and Interferences and because the period for seeking court review of the decision has expired and there are no allowed claims. The Office mailed a Notice of Abandonment on September 6, 2006.

The petition satisfies the requirements of 37 CFR 1.137(b) in that petitioner has supplied (1) the reply in the form of an RCE and a submission; (2) the petition fee; and (3) an appropriate statement of unintentional delay. Accordingly, the petition is **granted**.

This matter is being referred to Technology Center Art Unit 2811.

Telephone inquiries concerning this decision should be directed to the undersigned at (571) 272-3211.

C. T. Donnell

Christina Tartera Donnell
Senior Petitions Attorney
Office of Petitions

OIPE JC186 SEP 20 2004 PATENT & TRADEMARK OFFICE

IN THE UNITED STATES PATENT AND TRADEMARK OFFICE

In re Applicant:	§	
	§	
Jed Cowell	§	
	§	
Filed: 12/17/2002	§	Art Unit: 3765
	§	
Serial No. 10/320,915	§	Examiner: Moran, Katherine M.
	§	
For: PERSONAL COOLING DEVICE	§	Attorney Docket No. A02062US
	§	

AMENDMENT TO ADD INVENTOR

Mail Stop Amendment
Commissioner of Patents
P. O. Box 1450
Alexandria, VA 22313-1450

Dear Sir:

Applicant herewith amends the referenced patent application to add S. Michael Beavers as a joint inventor. Submitted with this amendment are the following: (1) Verified Statement of Jed Cowell, (2) Verified Statement of S. Michael Beavers, (3) Power of Attorney of inventors, Jed Cowell and S. Michael Beavers, (4) Declaration of inventors, Jed Cowell and S. Michael Beavers.

Wyatt, Tarrant & Combs, LLP
1715 Aaron Brenner Dr., Suite 800
Memphis, TN 38120-4367
Ph: 901-537-1000
Fax: 901-537-1010

Respectfully submitted,

H. Roy Berkenstock
Registration No. 24,719

CERTIFICATE UNDER 37 CFR 1.8(a)

I hereby certify that this correspondence is being deposited with the United States Postal Service as first class mail in an envelope addressed to: Commissioner for Patents, P. O. Box 1450, Alexandria, VA 22313-1450, on September 15, 2004.

H. Roy Berkenstock, Reg. No. 24,719

OIPE JC186 SEP 20 2004 PATENT & TRADEMARK OFFICE

IN THE UNITED STATES PATENT AND TRADEMARK OFFICE

Applicants/Patentees:	§	Group Art Unit:
Jed Cowell and S. Michael Beavers	§	3765
Filed/Issued: December 17, 2002	§	Examiner:
Serial No./Pat. No.: 10/320,915	§	Katherine M. Moran
For: **PERSONAL COOLING DEVICE**	§	Attorney Docket: **A02062US**

POWER OF ATTORNEY BY INVENTORS

As a named inventor, I hereby revoke all previous powers of attorney and appoint the following to conduct the prosecution of this application/maintenance of the patent and transact all business in the Patent and Trademark Office connected therewith:

H. Roy Berkenstock Reg. No. 24,719
Jerad G. Seurer Reg. No. 45,467

Please direct all communications to Wyatt Tarrant & Combs, LLP, 1715 Aaron Brenner Drive, Suite 800, Memphis, TN 37120 Telephone 901-537-1000; Facsimile 901-537-1010; to the attention of: H. Roy Berkenstock.

S. Michael Beavers

Date: 9/5/04

Jed Cowell

Date: 8/29/04

OIPE JC196
SEP 20 2004
PATENT & TRADEMARK OFFICE

IN THE UNITED STATES PATENT AND TRADEMARK OFFICE

APPLICANT: Jed Cowell

ATTY DOC #: A02062US

SERIAL NO.: 10/320,915

ART UNIT: 3765

FILING DATE: December 17, 2002

EXAMINER: Katherine M. Moran

TITLE: "Personal Cooling Device"

Mail Stop Amendment
Commissioner of Patents
P.O. Box 1450
Alexandria, VA 22313-1450

VERIFIED STATEMENT OF S. MICHAEL BEAVERS

Dear Commissioner:

S. Michael Beavers declares that:

The invention described and claimed in patent application 10/320,915 was developed by myself and Jed Cowell. At the time that Jed Cowell executed the application as a sole inventor without deceptive intent, I believed that my contribution did not rise to the level of inventorship. I have subsequently been apprised that I was in error and that my contribution is sufficient to make me a co-inventor, with which I concur. The omission of my name from the original application was in error and without deceptive intent on my part.

I hereby declare that all statements made herein of my own knowledge are true and that all statements made on information and belief are believed to be true; and further that these statements were made with the knowledge that willful false statements and the like so made are punishable by fine or imprisonment, or both, under 18 U.S.C.

§1001, and that such willful false statements may jeopardize the validity of the application or any patent issued thereon.

Respectfully submitted,

S. Michael Beavers
3574 Glynn Carrol Cove
Bartlett, Tennessee 38133

Date: 9/3/04

IN THE UNITED STATES PATENT AND TRADEMARK OFFICE

APPLICANT: Jed Cowell

ATTY DOC #: A02062US

SERIAL NO.: 10/320,915

ART UNIT: 3765

FILING DATE: December 17, 2002

EXAMINER: Katherine M. Moran

TITLE: "Personal Cooling Device"

Mail Stop Amendment
Commissioner of Patents
P.O. Box 1450
Alexandria, VA 22313-1450

APPENDIX A

VERIFIED STATEMENT OF JED COWELL

Dear Commissioner:

Jed Cowell declares that:

The invention described and claimed in patent application 10/320,915 was developed by myself and S. Michael Beavers. At the time that I executed the application as a sole inventor without deceptive intent, I believed that S. Michael Beavers' contribution did not rise to the level of inventorship. I have subsequently been apprised that I was in error and that S. Michael Beavers' contribution is sufficient to make him a co-inventor, with which I concur. The omission of S. Michael Beavers name from the original application was in error and without deceptive intent on my part.

I hereby declare that all statements made herein of my own knowledge are true and that all statements made on information and belief are believed to be true; and further that these statements were made with the knowledge that willful false statements and the like so made are punishable by fine or imprisonment, or both, under 18 U.S.C.

§1001, and that such willful false statements may jeopardize the validity of the application or any patent issued thereon.

Respectfully submitted,

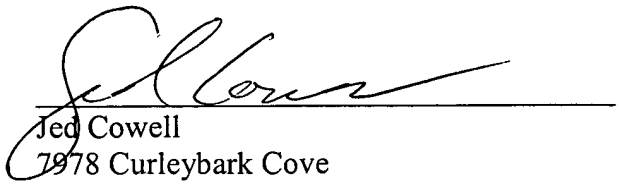

Jed Cowell
7978 Curleybark Cove
Bartlett, Tennessee 38135

Date: 9/3/04

SPE RESPONSE FOR CERTIFICATE OF CORRECTION

DATE : 11/13/08 Paper No.: —

TO SPE OF : ART UNIT 3765

SUBJECT : Request for Certificate of Correction for Appl. No.: 10/320915 Patent No.: 6857134 B1

Please respond to this request for a certificate of correction within 7 days.

FOR IFW FILES:

Please review the requested changes/corrections as shown in the COCIN document(s) in the IFW application image. No new matter should be introduced, nor should the scope or meaning of the claims be changed.

Please complete the response (see below) and forward the completed response to scanning using document code COCX.

FOR PAPER FILES:

Please review the requested changes/corrections as shown in the attached certificate of correction. Please complete this form (see below) and forward it with the file to:

Certificates of Correction Branch (CofC)
South Tower - 9A22
Palm Location 7580

Virginia Tolbert
Certificates of Correction Branch
703-308-9390 ext. 113

Thank You For Your Assistance

The request for issuing the above-identified correction(s) is hereby:
Note your decision on the appropriate box.

☒ **Approved**	All changes apply.
☐ **Approved in Part**	Specify below which changes **do not** apply.
☐ **Denied**	State the reasons for denial below.

Comments: _____

_____

_____

_____

_____

SPE 3765 Art Unit

UNITED STATES PATENT AND TRADEMARK OFFICE

Commissioner for Patents
United States Patent and Trademark Office
P.O. Box 1450
Alexandria, VA 22313-1450
www.uspto.gov

Paper No. 7

BLAKELY SOKOLOFF TAYLOR & ZAFMAN
12400 WILSHIRE BOULEVARD
SEVENTH FLOOR
LOS ANGELES, CA 90025-1030

COPY MAILED

SEP 2 4 2004

OFFICE OF PETITIONS

In re Application of :
Fransdonk, Robert W. :
Application No. 10/320,916 : ON PETITION
Filed: December 16, 2002 :
Attorney Docket No. 5782P001C2 :

This is a notice regarding your request for acceptance of a fee deficiency submission under 37 CFR 1.28. On September 1, 1998, the Court of Appeals for the Federal Circuit held that 37 CFR 1.28(c) is the sole provision governing the time for correction of the erroneous payment of the issue fee as a small entity. **See DH Technology v. Synergystex International, Inc. 154 F.3d 1333, 47 USPQ2d 1865 (Fed. Cir. Sept. 1, 1998).**

The Office no longer investigates or rejects original or reissue applications under 37 CFR 1.56. **1098 Off. Gaz. Pat. Office 502 (January 3, 1989)**. Therefore, nothing in this Notice is intended to imply that an investigation was done.

Your fee deficiency submission under 37 CFR 1.28 is hereby **ACCEPTED**.

Inquiries related to this communication should be directed to the undersigned at (703) 306-0482. Any telephone inquiries after approximately **September 24, 2004** should be directed to (571) 272-3206.

This file is being forwarded to Technology Center 2100 for further examination on the merits.

Liana Chase
Petitions Examiner
Office of Petitions
Office of the Deputy Commissioner
for Patent Examination Policy

UNITED STATES PATENT AND TRADEMARK OFFICE

Commissioner for Patents
United States Patent and Trademark Office
P.O. Box 1450
Alexandria, VA 22313-1450
www.uspto.gov

Tarek N. Fahmi
BLAKELY SOKOLOFF TAYLOR & ZAFMAN
12400 Wilshire Boulevard
Seventh Floor
Los Angeles, CA 90025-1030

MAILED

APR 15 2005

Technology Center 2100

In re Application of:
Robert W. Fransdonk
Application No. 10/320,916
Filed: December 16, 2002
For: METHOD AND SYSTEM TO SECURELY DISTRIBUTE CONTENT VIA A NETWORK

DECISION ON REQUEST TO WITHDRAW AS ATTORNEY OR AGENT

This is a decision on the Request To Withdraw from Representation filed October 18, 2004.

A grantable request to withdraw as attorney of record should indicate thereon the present mailing addresses of the attorney(s) who is/are withdrawing from the record and of the applicant. The request for withdrawal must be signed by every attorney seeking to withdraw or contain a clear indication that one attorney is signing on behalf of another/others. A request to withdraw will not be approved unless at least 30 (thirty) days would remain between the date of approval and the later of the expiration date of a time to file a response or the expiration date of the maximum time period which can be extended under 37 C.F.R. § 1. 136(a). The effective date of withdrawal being the date of decision and not the date of request. See M.P.E.P. § 402.06. 37 C.F.R. § 1.36 further requires that the applicant or patent owner be notified of the withdrawal of the attorney or agent.

The request is **GRANTED**.

All future communications from the Office will be directed to the below-listed address until otherwise notified by applicant. This correspondence address is provided by the withdrawn attorney(s). Applicant is reminded of the obligation to promptly notify the Patent and Trademark Office (Office) of any change in correspondence address to ensure receipt of all communications from the Office.

for

Vincent N. Trans
Special Program Examiner
Technology Center 2100

cc: Andre L. Marais
SCHWEGMAN, LUNDBERG, WOESSNER &
KLUTH, P.A.
1600 TCF TOWER
121 South Eighth Street
Minneapolis, MN 55402

UNITED STATES PATENT AND TRADEMARK OFFICE

Commissioner for Patents
United States Patent and Trademark Office
P.O. Box 1450
Alexandria, VA 22313-1450
www.uspto.gov

GATES & COOPER LLP
HOWARD HUGHES CENTER
6701 CENTER DRIVE WEST, SUITE 1050
LOS ANGELES CA 90045

MAILED

APR 08 2010

OFFICE OF PETITIONS

In re Patent No. 7,078,261 :
Issued: July 18, 2006 :
Application No. 10/320,933 : ON PETITION
Filed: December 16, 2002 :
Attorney Docket No: 30794.357-US-C1 :

This is a decision regarding your requests for acceptance of fee deficiency submissions and loss of small entity status filed January 14, 2010 and February 2, 2010 under 37 CFR 1.28.

On September 1, 1998, the Court of Appeals for the Federal Circuit held that 37 CFR 1.28(c) is the sole provision governing the time for correction of the erroneous payment of the issue fee as a small entity. See DH Technology v. Synergystex International, Inc.. 154 F.33d 1333, 47 USPQ2d 1865 (Fed. Cir. Sept. 1, 1998).

The Office no longer investigates or rejects original or reissue applications under 37 CFR 1.56. 1098 Off. Gaz. Pat. Office 502 (January 3, 1989). Therefore nothing in this Notice is intended to imply that an investigation was done.

Your fee deficiency submission under 37 CFR 1.28 is hereby accepted and the petition is **GRANTED**. Status as a small entity has also been removed.

Inquiries related to this communication should be directed to the Office of Petitions Staff at (571) 272-3282.

Patricia Faison-Ball
Senior Petitions Attorney
Office of Petitions

UNITED STATES PATENT AND TRADEMARK OFFICE

Commissioner for Patents
United States Patent and Trademark Office
P.O. Box 1450
Alexandria, VA 22313-1450
www.uspto.gov

MOTOROLA, INC
INTELLECTUAL PROPERTY SECTION
LAW DEPT
8000 WEST SUNRISE BLVD
FT LAUDERDAL FL 33322

COPY MAILED

FEB 28 2006

OFFICE OF PETITIONS

In re Application of	:	
Hagai Ohel	:	
Application No. 10/320,948	:	DECISION GRANTING PETITION
Filed: December 16, 2002	:	UNDER 37 CFR 1.137(b)
Attorney Docket No. GLM-M7(3791J)	:	

This is a decision on the petition under 37 CFR 1.137(b), filed October 13, 2005, to revive the above-identified application.

The petition is **GRANTED**.

The petition satisfies the conditions for revival pursuant to the provisions of 37 CFR 1.137(b) in that (1) the reply in the form of an amendment; (2) the petition fee; and (3) the required statement of unintentional delay have been received. Accordingly, the reply to the nonfinal Office action of February 10, 2005, is accepted as having been unintentionally delayed.

Telephone inquiries concerning this decision should be directed to the undersigned at (571) 272-3208.

This matter is being referred to Technology Center AU 2687.

Karen Creasy
Petitions Examiner
Office of Petitions
Office of the Deputy Commissioner
for Patent Examination Policy

UNITED STATES PATENT AND TRADEMARK OFFICE

Commissioner for Patents
United States Patent and Trademark Office
P.O. Box 1450
Alexandria, VA 22313-1450
www.uspto.gov

COPY MAILED

MAY 12 2005

OFFICE OF PETITIONS

LERNER AND GREENBERG, P.A.
POST OFFICE BOX 2480
HOLLYWOOD, FL 33022-2480

In re Patent No. 6,789,892 :
Issue Date: September 14, 2004 :
Application No. 10/320,952 : ON PETITION
Filed: December 16, 2002 :
Attorney Docket No. GTP/US 3203 :

This is a decision on the petition filed November 29, 2004, which is being treated as a petition under 37 CFR 3.81(b)[1] to correct the assignee's name on the front page of the above-identified patent by way of a Certificate of Correction. See MPEP 323.01 for correction of error in recorded cover sheet.

The petition is **granted.**

Telephone inquiries concerning this matter may be directed to the undersigned at (571) 272-3210. Any questions concerning the issuance of the Certificate of Correction should be directed to the Certificates of Correction Branch at (703) 305-8309.

This matter is being referred to the Certificates of Correction Branch for issuance of the requested Certificate of Correction.

Irvin Dingle
Petitions Examiner
Office of Petitions
Office of the Deputy Commissioner
for Patent Examination Policy

[1] See Official Gazette of June 22, 2004

UNITED STATES PATENT AND TRADEMARK OFFICE

Commissioner for Patents
United States Patent and Trademark Office
P.O. Box 1450
Alexandria, VA 22313-1450
www.uspto.gov

DALE B. HALLING
SUITE 311
24 SOUTH WEBER STREET
COLORADO SPRINGS, CO 80903

COPY MAILED

JAN 19 2005

OFFICE OF PETITIONS

In re Application of :
James Donald Koskey Jr. :
Application No. 10/320,973 : ON PETITION
Filed: December 17, 2002 :
Attorney Docket No. KHI-0201 :

This is a decision on the petition under 37 CFR 1.137(b), filed January 5, 2005, to revive the above-identified application.

The petition is **DISMISSED**.

Any request for reconsideration of this decision must be submitted within TWO (2) MONTHS from the mail date of this decision. Extensions of time under 37 CFR 1.136(a) are permitted. The reconsideration request should include a cover letter entitled "Renewed Petition under 37 CFR 1.137(b)." Petitioner is advised that this is **not** a final agency action decision.

The above-identified application became abandoned for failure to submit the issue fee in a timely manner in reply to the Notice of Allowance mailed October 1, 2004, which set a statutory period for reply of three (3) months. Accordingly, the above-identified application became abandoned on January 4, 2005.

A grantable petition to revive an abandoned application under 37 CFR 1.137(b) must be accompanied by: (1) the required reply (unless previously filed), which may met by the filing of a continuing application in a nonprovisional application abandoned for failure to prosecute, but must be the payment of the issue fee or any outstanding balance thereof in an application or patent, abandoned or lapsed for failure to pay the issue fee or any portion thereof; (2) the petition fee as set forth in 37 CFR 1.17(m); (3) a statement that the entire delay in filing the required reply from the due date for the reply until the filing of a grantable petition pursuant to 37 CFR 1.137(b) was unintentional; and (4) any terminal disclaimer (and fee as set forth in 37 CFR 1.20(d)). This petition lacks item (1).

As to item(1), petitioner has authorized the Office to charge in the amount of $685.00 for the issue fee in the credit card payment form. Effective December 8, 2004, the issue fee for small entity is $700.00. Therefore, an additional $15.00 is required.

Further correspondence with respect to this matter should be addressed as follows:

By mail: Mail Stop PETITION
Commissioner for Patents
Post Office Box 1450
Alexandria, VA 22313-1450

By hand: Customer Window located at:

U.S. Patent and Trademark Office
220 20th street S
Customer Window, Mail Stop Petitions
Crystal Plaza Two Lobby, Room 1B03
Arlington, VA 22202

By fax: (703) 872-9306
Attn: Office of Petitions

The drawings filed on December 7, 2004 have been approved by the Draftsperson. A copy of the Notice of Draftsperson's Patent Drawing Review (PTO-948) is attached.

Telephone inquiries concerning this decision should be directed to Wan Laymon at (571) 272-3220.

This matter is being referred to the Publishing Division.

Wan Laymon
Petitions Examiner
Office of Petitions
Office of the Deputy Commissioner
for Patent Examination Policy

Attachment: PTO-948
Notice of Fee Due

UNITED STATES PATENT AND TRADEMARK OFFICE

Commissioner for Patents
United States Patent and Trademark Office
P.O. Box 1450
Alexandria, VA 22313-1450
www.uspto.gov

DALE B. HALLING
SUITE 311
24 SOUTH WEBER STREET
COLORADO SPRINGS, CO 80903

COPY MAILED

FEB 0 4 2005

OFFICE OF PETITIONS

In re Application of :
James Donald Koskey Jr. :
Application No. 10/320,973 : ON PETITION
Filed: December 17, 2002 :
Attorney Docket No. KHI-0201 :

This is a decision on the renewed petition under 37 CFR 1.137(b), filed January 24, 2005, to revive the above-identified application.

The petition is **GRANTED**.

Telephone inquiries concerning this decision should be directed to Wan Laymon at (571) 272-3220.

This matter is being referred to the Publishing Division.

Wan Laymon
Petitions Examiner
Office of Petitions
Office of the Deputy Commissioner
for Patent Examination Policy

UNITED STATES PATENT AND TRADEMARK OFFICE

UNITED STATES DEPARTMENT OF COMMERCE
United States Patent and Trademark Office
Address: COMMISSIONER FOR PATENTS
P.O. Box 1450
Alexandria, Virginia 22313-1450
www.uspto.gov

APPLICATION NO.	FILING DATE	FIRST NAMED INVENTOR	ATTORNEY DOCKET NO.	CONFIRMATION NO.
10/321,019	12/17/2002	Daniel D. Friel SR.	FRIEL-97	3315

7590 11/18/2008

Connolly Bove Lodge & Hutz, LLP
P.O. Box 2207
Wilmington, DE 19899-2207

EXAMINER	
THOMAS, DAVID B	
ART UNIT	PAPER NUMBER
3723	

MAIL DATE	DELIVERY MODE
11/18/2008	PAPER

Please find below and/or attached an Office communication concerning this application or proceeding.

The time period for reply, if any, is set in the attached communication.

UNITED STATES PATENT AND TRADEMARK OFFICE

COMMISSIONER FOR PATENTS
UNITED STATES PATENT AND TRADEMARK OFFICE
P.O. BOX 1450
ALEXANDRIA, VA 22313-1450
www.uspto.gov

In re Patent No. FRIEL, DANIEL D.
Issue Date: March 8, 2005
Appl No.: 10/321,019
Filed: December 17, 2002
For: Apparatus for Precision Edge Refinement of Metallic Cutting Blades

DECISION GRANTING PETITION
37 CFR 1.324

This is a decision on the petition filed September 25, 2008 and the request for consideration filed October 13, 2008 to correct inventorship under 37 CFR 1.324.

The petition is granted.

The patented file is being forwarded to Certificate of Corrections Branch for issuance of a certificate naming only the actual inventor or inventors.

Joseph J. Hail, III
Supervisory Patent Examiner
Art Unit 3723
Technology Center 3700

Connolly Bove Lodge & Hutz, LLP
P.O. Box 2207
Wilmington, DE 19899-2207

UNITED STATES PATENT AND TRADEMARK OFFICE

COMMISSIONER FOR PATENTS
UNITED STATES PATENT AND TRADEMARK OFFICE
P.O. BOX 1450
ALEXANDRIA, VA 22313-1450
www.uspto.gov

DATE: November 12, 2008
TO: Certificates of Correction Branch
FROM: Joseph J. Hail, III
SPE, Art Unit 3723
SUBJECT: REQUEST FOR CERTIFICATE OF CORRECTION

Please issue a Certificate of Correction in U. S. Letters Patent No. 6,863,600 as specified on the attached Certificate.

Joseph J. Hail, III, SPE
Art Unit 3723

UNITED STATES PATENT AND TRADEMARK OFFICE

CERTIFICATE

Patent No. 6,863,600
Patented: March 8, 2005

On petition requesting issuance of a certificate for correction of inventorship pursuant to 35 U.S.C. 256, it has been found that the above identified patent, through error and without deceptive intent, improperly sets forth the inventorship. Accordingly, it is hereby certified that the correct inventorship of this patent is:

Daniel D. Friel, Sr.	Greenville, DE
Robert P. Bigliano	Wilmington, DE

Joseph J. Hail, III
Supervisory Patent Examiner
Art Unit 3723

UNITED STATES PATENT AND TRADEMARK OFFICE

OFFICE

COPY MAILED

JAN 3 0 2006

Director's Office
Office of Patent Publication

CHRISTIE, PARKER & HALE, LLP
P.O. BOX 7068
PASADENA, CA 91109-7068

In re Application of :
RICHERT, CARSON T., et al. :
Application No. 10/321,026 : **DECISION ON PETITION**
Filed: December 16, 2002 :
Attorney Docket No. 49571/LTR/R100 :

This is a decision on the Petition To Withdraw Abandonment, Accept Issue Fee, and Issue Patent, received in the United States Patent and Trademark Office (USPTO) on August 22, 2005.

The application was held abandoned for failure to timely pay the issue fee as required in the Notice of Allowance and Fee(s) Due, mailed December 1, 2003, which set a three (3) month statutory period for reply. The issue fee and publications fee, due on March 1, 2004, were received on September 20, 2004. Accordingly, this application became abandoned on March 2, 2004. A Notice of Abandonment was mailed on December 21, 2004.

Petitioner states that:

1. The PTO issued two Notice of Allowance. The examiner left phone messages with applicant's attorney before the issue fee due date about amending the allowed claims. No further written or oral communication was received.
2. Applicant assumed that the second Notice of Allowance superseded the first Notice of Allowance
3. Applicant timely paid the issue fee on September 15, 2004

The petition is **DISMISSED.**

Since, the applicant did not receive any communication from the Office (e.g. Examiner Amendment, Examiners Interview Summary, new Notice of Allowance) prior to the due date indicated on the Notice of Allowance mailed December 1, 2003, the issue fee and publication fee were required to be paid on or prior to the due date of March 1, 2004.

The file does reveal an Interview Summary on June 8, 2004 with Joseph M Pelham and Mr. LeRoy Rahn, which indicates that Mr. Rahn authorized entry of proposed amendment and cancellation of independent claims 22, 23, and 44. Also, that a Supplemental Notice of Allowability was mailed June 17, 2004, responsive to the telephone message of June 8, 2004. However, the Notice of Allowability does not extend payment of the issue fee. Further, there is no record of a second Notice Of Allowance, allegedly mailed on March 1, 2004.

The petitioner should consider petitioning to the Director as follows:

Filing a Petition for Revival of Abandoned Application under CFR § 1.137 (a) or (b). (Forms are available at USPTO website http://www.uspto.gov)

- Under 37 CFR 1.137(a), a petition for the revival of an ***unavoidably*** abandoned application
- Under 37 CFR 1.137(b), a petition for the revival of an ***unintentionally*** abandoned application

Further correspondence with respect to the Petition for Revival under 37 CFR § 1.137 should be directed to the Office of Petitions at 571-272-3282 or addressed as follows:

By mail:
Mail Stop Petitions
Commissioner For Patents
Office of Petitions
P. O. Box 1450
Alexandria, VA 22313-1450

Telephone inquires relating to this decision may be directed to the undersigned in the Office of Patent Publications at 703-308-9250.

Thomas Hawkins
Paralegal Specialist
Office of the Director
Office of Patent Publications

UNITED STATES PATENT AND TRADEMARK OFFICE

OFFICE

COPY MAILED

MAR 1 6 2006

Director's Office
Office of Patent Publication

CHRISTIE, PARKER & HALE, LLP
P.O. BOX 7068
PASADENA, CA 91109-7068

In re Application of :
RICHERT, CARSON T., et al. :
Application No. 10/321,026 : **DECISION ON PETITION**
Filed: December 16, 2002 :
Attorney Docket No. 49571/LTR/R100 :

This is a decision on the Request For Reconsideration Of Decision On Petition, received in the United States Patent and Trademark Office (USPTO) on February 17, 2006.

The Request is **Denied.**

The undersigned has inspected the documents electronically captured in the Image File Wrapper (IFW) and has found no presence of a second Notice of Allowance.

In regards to the applicant's copy of Image File Wrapper For Application No. 10/321,026 via the Patent Application Information Retrieval (PAIR) system, although it indicates that a Notice of Allowance and Fee(s) Due (PTOL-85) with mail room dated of June 17, 2004, the documents processed on that day were the Examiner Interview Summary and the Notice of **Allowability**. Again, there is no evidence of a second Notice of Allowance.

Further, in the Petition To Withdraw Abandonment received on August 22, 2005, the petitioner indicated, "When applicant received the second Notice of Allowance on June 17, 2004, applicant assumed that it superceded the first Notice of Allowance." However, the petitioner did not/could not provide a copy of the alleged second Notice of Allowance.

The petitioner should consider petitioning to the Director as follows:

Filing a Petition for Revival of Abandoned Application under CFR § 1.137 (a) or (b). (Forms are available at USPTO website http://www.uspto.gov)

- Under 37 CFR 1.137(a), a petition for the revival of an ***unavoidably*** abandoned application
- Under 37 CFR 1.137(b), a petition for the revival of an ***unintentionally*** abandoned application

Further correspondence with respect to the Petition for Revival under 37 CFR § 1.137 should be directed to the Office of Petitions at 571-272-3282 or addressed as follows:

By mail:
Mail Stop Petitions
Commissioner For Patents
Office of Petitions
P. O. Box 1450
Alexandria, VA 22313-1450

Telephone inquires relating to this decision may be directed to the undersigned in the Office of Patent Publications at 703-308-9250.

Thomas E Hawkins
Paralegal Specialist
Office of the Director
Office of Patent Publications

UNITED STATES PATENT AND TRADEMARK OFFICE

Commissioner for Patents
United States Patent and Trademark Office
P.O. Box 1450
Alexandria, VA 22313-1450
www.uspto.gov

CHRISTIE PARKER & HALE LLP
PO BOX 7068
PASADENA CA 91109-7068

COPY MAILED
MAY 24 2006
OFFICE OF PETITIONS

In re Application of :
Richert, et al. :
Application No. 10/321,026 : ON PETITION
Filed: December 16, 2002 :
Attorney Docket No. 49571/LTR/R100

This is a decision on the "REQUEST FOR RECONSIDERATION OF DECISION ON PETITION OR ALTERNATIVELY PETITION TO REVIVE", filed April 24, 2006, which is being treated as a petition to withdraw the holding of abandonment under 37 CFR 1.181 and a petition to revive under 37 CFR 1.137(a).

The petition under 37 CFR 1.181 is **DENIED**.

The petition under 37 CFR 1.137(a) is **DISMISSED**.

The above-identified application became abandoned for failure to timely pay the issue fee as required by the Notice of Allowance mailed December 1, 2003. This Notice set a three (3) month statutory period for reply. No extensions of time under 37 CFR 1.136(a) were available. No issue fee having been received, the application became abandoned on March 2, 2004. A Notice of Abandonment was mailed on December 21, 2004. Applicants filed a petition to withdraw the holding of abandonment on August 22, 2005, which was dismissed in a decision mailed on January 30, 2006. Applicants filed a request for reconsideration on February 17, 2006, which was denied in a decision mailed on March 16, 2006.

The decision mailed on March 16, 2006 "denied" applicants' petition (as opposed to merely "dismissing" it). As such, it was a final agency action within the meaning of 5 U.S.C. § 704 for purposes of seeking judicial review. See MPEP 1002.02. Accordingly, the petition to withdraw the holding of abandonment will not be reconsidered.

With respect to applicants' petition to revive filed in the alternative, it is not clear whether applicants seek to file a petition to revive due to **unavoidable** delay under 37 CFR **1.137(a)**, or a petition to revive due to **unintentional** delay under 37 CFR **1.137(b)**.[1]

On request for reconsideration, applicants should clarify whether they wish to revive the application pursuant to 37 CFR 1.137(a) or 37 CFR 1.137(b). A petition fee is required for the filing, and not merely the grant, of each petition.

A grantable petition under 37 CFR 1.137(a) must be accompanied by: (1) the reply required to the outstanding Office action or notice, unless previously filed; (2) the petition fee set forth in 37 CFR 1.17(l); (3) a showing to the satisfaction of the Commissioner that the entire delay in filing the required reply from the due date for the reply until the filing of a grantable petition pursuant to this paragraph was unavoidable; and (4) any terminal disclaimer (and fee as set forth in 37 CFR 1.20(d)) required pursuant to 37 CFR 1.137(d).

A grantable petition pursuant to 37 CFR 1.137(b) must be accompanied by (1) The reply required to the outstanding Office action or notice, unless previously filed; (2) The petition fee as set forth in 37 CFR 1.17(m); (3) A statement that the entire delay in filing the required reply from the due date for the reply until the filing of a grantable petition pursuant to this paragraph was unintentional. The Commissioner may require additional information where there is a question whether the delay was unintentional; and (4) Any terminal disclaimer (and fee as set forth in 37 CFR 1.20(d)) required pursuant to paragraph (d) of this section.

Further correspondence with respect to this matter should be addressed as follows:

---

[1] Applicants stated in the petition that they "petition for revival of this application under 37 CFR 1.137(b) on the ground that the delay was unavoidable".

By mail: Mail Stop Petitions
Commissioner for Patents
P.O. Box 1450
Alexandria VA 22313-1450

By FAX: (571)273-8300
Attn: Office of Petitions

Telephone inquiries concerning this decision should be directed to the undersigned at (571)272-3207

Cliff Congo
Petitions Attorney
Office of Petitions

UNITED STATES PATENT AND TRADEMARK OFFICE

Commissioner for Patents
United States Patent and Trademark Office
P.O. Box 1450
Alexandria, VA 22313-1450
www.uspto.gov

WEINGARTEN SCHURGIN GAGNEBIN & LEBOVICI LLP
TEN POST OFFICE SQUARE
BOSTON MA 02109

COPY MAILED

OCT 16 2006

OFFICE OF PETITIONS

In re Application of :
Richert, et al. :
Application No. 10/321,026 : ON PETITION
Filed: December 16, 2002 :
Attorney Docket No. 49571/LTR/R100

This is a decision on the petition to revive under 37 CFR 1.137(b), filed July 20, 2006.

The petition under 37 CFR 1.137(b) is **GRANTED**.

The above-identified application became abandoned for failure to timely pay the issue fee as required by the Notice of Allowance mailed December 1, 2003. This Notice set a three (3) month statutory period for reply. No extensions of time under 37 CFR 1.136(a) were available. No issue fee having been received, the application became abandoned on March 2, 2004. A Notice of Abandonment was mailed on December 21, 2004. Applicants filed a petition to withdraw the holding of abandonment on August 22, 2005, which was dismissed in a decision mailed on January 30, 2006. Applicants filed a request for reconsideration on February 17, 2006, which was denied in a decision mailed on March 16, 2006. Applicants filed a petition to revive on April 24, 2006, which was dismissed in a decision mailed on May 24, 2006.

With the instant petition, applicants paid the petition fee and made the proper statement of unintentional delay. The required reply in the form of the issue fee was previously submitted.

The matter is being forwarded to the Office of Patent Publication for processing into a patent.

Telephone inquiries concerning this decision should be directed to the undersigned at (571)272-3207

Cliff Congo
Petitions Attorney
Office of Petitions

UNITED STATES PATENT AND TRADEMARK OFFICE

COMMISSIONER FOR PATENTS
UNITED STATES PATENT AND TRADEMARK OFFICE
P.O. BOX 1450
ALEXANDRIA, VA 22313-1450
www.uspto.gov

Paper No. 4

AIR PRODUCTS AND CHEMICALS, INC.
PATENT DEPARTMENT
7201 HAMILTON BOULEVARD
ALLENTOWN PA 18195-1501

COPY MAILED

MAY 2 2 2003

OFFICE OF PETITIONS

In re Application of
Pushpinder Singh Puri
Application No. 10/321,032
Filed: December 16, 2002
Attorney Docket No. 06152 USA
Title: DOUBLE WALLED VESSELS FOR ODORANT CONTAINMENTS

DECISION ON PETITION

This is a decision on the "Response to a Notice of Omitted Items"[1], filed April 1, 2003, requesting that the above-identified application be accorded a filing date of December 16, 2002, without Figure 3 as described in the specification upon filing.

The application was filed on December 16, 2002. However, on March 20, 2003, Initial Patent Examination Division (OIPE) mailed a notice stating that the application had been accorded a filing date, and advising applicants that the application was deposited without Figure 3, which was described in the specification.

Petitioners submit the following:

> The body of the text of the application serial number 10/321,032 was erroneously duplicated from another application filed the same day. Therefore, Figure 3 is not associated with the correct application (attached here). Attached is the correct application for serial number 10/321,032...It is understood that the filing date shall remain as 16 December 2002.

Petitioner's understanding is incorrect.

1 This is properly treated as a petition under 37 CFR 1.53(b).

Furthermore, the review of the official file has revealed that the document submitted with the instant petition is not the same document which was submitted on filing. For example, claim number 1 differs from that which was submitted on filing.

If petitioner desires for the examiner to consider the submitted specification, petitioner will need to file an amendment canceling the specification and claims submitted on filing, and requesting that a newly submitted specification and claims be entered. Any such amendment will, of course, be reviewed by the examiner for new matter[2]. If the examiner considers the material submitted with the instant petition to constitute new matter, Petitioner will have to accept the later filing date.

For these reasons, the petition under 37 CFR 1.53(b) must be **dismissed**.

The original application papers will include only those application papers present on the date of deposit.

The petition fee of $130.00 will be charged to Petitioner's Deposit Account, as authorized in the petition, as this petition was not necessitated by any error on the part of the Office.

The Application is being returned to the Office of Initial Patent Examination for further processing with a filing date of December 16, 2002, using only the application papers filed on that date.

Telephone inquiries specific to this matter should be directed to Petitions Attorney Paul Shanoski at (703) 305-0011.

Jon D Wood

Beverly M. Flanagan
Supervisory Petitions Examiner
Office of Petitions
United States Patent and Trademark Office

---

2 See MPEP §608.02(a).

RECEIVED
MAY 30 2003
PATENT DEPARTMENT

UNITED STATES PATENT AND TRADEMARK OFFICE

OIPE JC89
JUL 07 2003
PATENT & TRADEMARK OFFICE

COMMISSIONER FOR PATENTS
UNITED STATES PATENT AND TRADEMARK OFFICE
P.O. BOX 1450
ALEXANDRIA, VA 22313-1450
www.uspto.gov

Paper No. 4

AIR PRODUCTS AND CHEMICALS, INC.
PATENT DEPARTMENT
7201 HAMILTON BOULEVARD
ALLENTOWN PA 18195-1501

COPY MAILED

MAY 22 2003

OFFICE OF PETITIONS

In re Application of
Pushpinder Singh Puri
Application No. 10/321,032
Filed: December 16, 2002
Attorney Docket No. 06152 USA
Title: DOUBLE WALLED VESSELS FOR ODORANT CONTAINMENTS

DECISION ON PETITION

RECEIVED
JUL 11 2003
GROUP 1700

This is a decision on the "Response to a Notice of Omitted Items"[1], filed April 1, 2003, requesting that the above-identified application be accorded a filing date of December 16, 2002, without Figure 3 as described in the specification upon filing.

The application was filed on December 16, 2002. However, on March 20, 2003, Initial Patent Examination Division (OIPE) mailed a notice stating that the application had been accorded a filing date, and advising applicants that the application was deposited without Figure 3, which was described in the specification.

Petitioners submit the following:

> The body of the text of the application serial number 10/321,032 was erroneously duplicated from another application filed the same day. Therefore, Figure 3 is not associated with the correct application (attached here). Attached is the correct application for serial number 10/321,032...It is understood that the filing date shall remain as 16 December 2002.

Petitioner's understanding is incorrect.

07/09/2003 SZEWDIE1 00000093 10321032
01 FC:1460 130.00 DA

1 This is properly treated as a petition under 37 CFR 1.53(b).

RECEIVED
DEC 10 2003
TECHNOLOGY CENTER R3700

Furthermore, the review of the official file has revealed that the document submitted with the instant petition is not the same document which was submitted on filing. For example, claim number 1 differs from that which was submitted on filing.

If petitioner desires for the examiner to consider the submitted specification, petitioner will need to file an amendment canceling the specification and claims submitted on filing, and requesting that a newly submitted specification and claims be entered. Any such amendment will, of course, be reviewed by the examiner for new matter[2]. If the examiner considers the material submitted with the instant petition to constitute new matter, Petitioner will have to accept the later filing date.

For these reasons, the petition under 37 CFR 1.53(b) must be **dismissed**.

The original application papers will include only those application papers present on the date of deposit.

The petition fee of $130.00 will be charged to Petitioner's Deposit Account, as authorized in the petition, as this petition was not necessitated by any error on the part of the Office.

The Application is being returned to the Office of Initial Patent Examination for further processing with a filing date of December 16, 2002, using only the application papers filed on that date.

Telephone inquiries specific to this matter should be directed to Petitions Attorney Paul Shanoski at (703) 305-0011.

Beverly M. Flanagan
Supervisory Petitions Examiner
Office of Petitions
United States Patent and Trademark Office

2 See MPEP §608.02(a).

UNITED STATES PATENT AND TRADEMARK OFFICE

Commissioner for Patents
United States Patent and Trademark Office
P.O. Box 1450
Alexandria, VA 22313-1450
www.uspto.gov

JJGJR.: 09-07

Paper No: __

GROSSMAN, TUCKER,
PERREAULT & PFLEGER, PLLC
C/O PORTFOLIOIP
P. O. BOX 52050
MINNEAPOLIS MN 55402

COPY MAILED

SEP 2 4 2007

OFFICE OF PETITIONS

In re Application of :
Alderrou, et al. : DECISION
Application No.: 10/321,048 :
Filing Date: 16 December, 2002 :
Attorney Docket No. P15224 :

This is a decision on the petition filed on 5 July, 2007, and considered as a request to withdraw the holding of abandonment under 37 C.F.R. §1.181.

The Office regrets the delay in addressing this matter, however, the instant petition was presented to the attorneys in the Office of Petitions only at this writing.[1]

The petition as considered under 37 C.F.R. §1.181 is **DISMISSED**.

NOTES:

(1) Any petition (and fee) for reconsideration of this decision must be submitted within two (2) months from the mail date of this decision. Extensions of time under 37 C.F.R. §1.136(a) are permitted. The

[1] NOTE: Monitoring of the status of applications on PAIR can inform one's management of application responses and provide an indication when mailings of Office actions should be expected. Status Inquiries filed at three (3) or four (4) month intervals provide a demonstration of diligence and attention in supporting a petition seeking relief under 37 C.F.R. §1.181.

reconsideration request should include a cover letter entitled "Renewed Petition under 37 C.F.R. §1.181."

(If Petitioner is unable to present even a satisfactory showing to support a petition under 37 C.F.R. §1.137(a), and Petitioner's only alternative will be to file a petition under 37 C.F.R. §1.137(b).)

(2) Thereafter, there will be no further reconsideration of this matter.[2]

BACKGROUND

The record reflects that:

- Petitioner failed to reply timely and properly to the non-final Office action mailed on 15 November, 2006, with reply due absent extension of time on or before 15 February, 2007;
- the application went abandoned by operation of law after midnight 15 February, 2007;
- the Office mailed a Notice of Abandonment on 29 May, 2007;
- on 5 July, 2007, Petitioner filed the instant petition with, *inter alia*, an averment that he did not receive a copy of the final Office action, and made a statement of search, provided docket records for the instant application, but not for the due date of the reply as set forth in the guidance of the Commentary at MPEP §711.03(c), as discussed below, and more critically, while Petitioner averred that the Office confirmation document submitted with the petition evidenced that th Office failed to enter the Revocation/Power of Attorney that Petitioner filed by FAX (to (571) 272-8300) on 19 May, 2006, the only document Petitioner provides is a document generated by his FAX machine–and not an Office confirmation document–and further the document provided by Petitioner evidences that his Revocation/Power of Attorney was not filed, but submitted to another FAX number that was/is not the official filing line.

The statutes, the rules of practice and the guidance set forth in the Commentary of the Manual of Patent Examining Procedure (MPEP) provide many avenues for action and methods of protection

---

[2] For more than a century, punctuality and due diligence, equally with good faith, have been deemed essential requisites to the success of those who seek to obtain the special privileges of the patent law, and they are demanded in the interest of the public and for the protection of rival inventors. See: Porter v. Louden, 7 App.D.C. 64 (C.A.D.C. 1895), citing Wollensak v. Sargent, 151 U.S. 221, 228, 38 L. Ed. 137, 14 S. Ct. 291 (1894). An invention benefits no one unless it is made public, and the rule of diligence should be so applied as to encourage reasonable promptness in conferring this benefit upon the public. Automatic Electric Co. v. Dyson, 52 App. D.C. 82; 281 F. 586 (C.A.D.C. 1922). Generally, 35 U.S.C. §6; 37 C.F.R.§§1.181, 182, 183.

for applicants, patentees, assignees, practitioners and others to accomplish tasks before the Office.

However, persons who fail to utilize those statutes and rules fail to succeed in their tasks or obtain those protections.

Notably, the availability of applications and application papers online to applicants/practitioners who diligently associate their Customer Number with the respective application(s) now provides an applicant/practitioner immediate and on-demand information as to events/transactions in an application. Thus, now if one wishes to know the progress in and/or status of an application or the accuracy of the data therein, one need only look at the file online.

Out of an abundance of caution, Petitioners always are reminded that the filing of a petition under 37 C.F.R. §1.181 does not toll any periods that may be running any action by the Office and a petition seeking relief under the regulation must be filed within two (2) months of the act complained of (see: 37 C.F.R. §1.181(f)); and those registered to practice *and* all others who make representations before the Office must inquire into the underlying facts of representations made to the Office and support averments with the appropriate documentation–since all owe to the Office the continuing duty to disclose.[3]

---

[3] See supplement of 17 June, 1999. The Patent and Trademark Office is relying on petitioner's duty of candor and good faith and accepting a statement made by Petitioner. See Changes to Patent Practice and Procedure, 62 Fed. Reg. at 53160 and 53178, 1203 Off. Gaz. Pat. Office at 88 and 103 (responses to comments 64 and 109)(applicant obligated under 37 C.F.R. §10.18 to inquire into the underlying facts and circumstances when providing statements to the Patent and Trademark Office).

Specifically, the regulations at 37 C.F.R. §10.18 provide:

§ 10.18 Signature and certificate for correspondence filed in the Patent and Trademark Office.
(a) For all documents filed in the Office in patent, trademark, and other non-patent matters, except for correspondence that is required to be signed by the applicant or party, each piece of correspondence filed by a practitioner in the Patent and Trademark Office must bear a signature by such practitioner complying with the provisions of §1.4(d), §1.4(e), or § 2.193(c)(1) of this chapter.
(b) By presenting to the Office (whether by signing, filing, submitting, or later advocating) any paper, the party presenting such paper, whether a practitioner or non-practitioner, is certifying that—

(1) All statements made therein of the party's own knowledge are true, all statements made therein on information and belief are believed to be true, and all statements made therein are made with the knowledge that whoever, in any matter within the jurisdiction of the Patent and Trademark Office, knowingly and willfully falsifies, conceals, or covers up by any trick, scheme, or device a material fact, or makes any false, fictitious or fraudulent statements or representations, or makes or uses any false writing or document knowing the same to contain any false, fictitious or fraudulent statement or entry, shall be subject to the penalties set forth under 18 U.S.C. 1001, and that violations of this paragraph may jeopardize the validity of the application or document, or the validity or enforceability of any patent, trademark registration, or certificate resulting therefrom; and

(2) To the best of the party's knowledge, information and belief, formed after an inquiry reasonable under the circumstances, that —

(i) The paper is not being presented for any improper purpose, such as to harass someone or to cause unnecessary delay or needless increase in the cost of prosecution before the Office;

(ii) The claims and other legal contentions therein are warranted by existing law or by a nonfrivolous argument for the extension, modification, or reversal of existing law or the establishment of new law;

(iii) The allegations and other factual contentions have evidentiary support or, if specifically so identified, are likely to have evidentiary support after a reasonable opportunity for further investigation or discovery; and

(iv) The denials of factual contentions are warranted on the evidence, or if specifically so identified, are reasonably based on a lack of information or belief.

(c) Violations of paragraph (b)(1) of this section by a practitioner or non-practitioner may jeopardize the validity of the application or document, or the validity or enforceability of any patent, trademark registration, or certificate resulting therefrom. Violations of any of paragraphs (b)(2)(i) through (iv) of this section are, after notice and reasonable opportunity to respond, subject to such sanctions as deemed appropriate by the

STATUTES, REGULATIONS AND ANALYSIS

Congress has authorized the Commissioner to "revive an application if the delay is shown to the satisfaction of the Commissioner to have been "unavoidable." 35 U.S.C. §133 (1994).[4]

The regulations at 37 C.F.R. §1.137(a) and (b) set forth the requirements for a petitioner to revive a previously unavoidably or unintentionally, respectively, abandoned application under this congressional grant of authority. The language of 35 U.S.C. §133 and 37 C.F.R. §1.137(a) is clear, unambiguous, and without qualification: the delay in tendering the reply to the outstanding Office action, as well as filing the first petition seeking revival, must have been unavoidable for the reply now to be accepted on petition.[5]

Delays in responding properly raise the question whether delays are unavoidable.[6] Where there is a question whether the delay was unavoidable, Petitioners must meet the burden of establishing that the delay was unavoidable within the meaning of 35 U.S.C. §133 and 37 C.F.R. §1.137(a).[7]

And the Petitioner must be diligent in attending to the matter.[8] Failure to do so does not

---

Commissioner, or the Commissioner's designee, which may include, but are not limited to, any combination of —

(1) Holding certain facts to have been established;
(2) Returning papers;
(3) Precluding a party from filing a paper, or presenting or contesting an issue;
(4) Imposing a monetary sanction;
(5) Requiring a terminal disclaimer for the period of the delay; or
(6) Terminating the proceedings in the Patent and Trademark Office.

(d) Any practitioner violating the provisions of this section may also be subject to disciplinary action. See § 10.23(c)(15).

[Added 50 FR 5175, Feb. 6, 1985, effective Mar. 8, 1985; para. (a) revised, 58 FR 54494, Oct. 22, 1993, effective Nov. 22, 1993; paras. (a) & (b) revised, paras. (c) & (d) added, 62 FR 53131, Oct. 10, 1997, effective Dec. 1, 1997; para. (a) revised, 69 FR 56481, Sept. 21, 2004, effective Oct. 21, 2004]

[4] 35 U.S.C. §133 provides:

35 U.S.C. §133 Time for prosecuting application.

Upon failure of the applicant to prosecute the application within six months after any action therein, of which notice has been given or mailed to the applicant, or within such shorter time, not less than thirty days, as fixed by the Commissioner in such action, the application shall be regarded as abandoned by the parties thereto, unless it be shown to the satisfaction of the Commissioner that such delay was unavoidable.

[5] Therefore, by example, an unavoidable delay in the payment of the Filing Fee might occur if a reply is shipped by the US Postal Service, but due to catastrophic accident, the delivery is not made.

[6] See: *Changes to Patent Practice and Procedure; Final Rule Notice*, 62 *Fed. Reg.* at 53158-59 (October 10, 1997), 1203 *Off. Gaz. Pat. Office* at 86-87 (October 21, 1997).

[7] See: In re Application of G, 11 USPQ2d 1378, 1380 (Comm'r Pats. 1989).

[8] See: Diligence in Filing Petitions to Revive and Petitions to Withdraw the Holding of Abandonment, 1124 Off. Gaz. Pat. Office 33 (March 19, 1991). It was and is Petitioner's burden to exercise diligence in seeking either to have the holding of abandonment withdrawn or the application revived. See 1124 Off. Gaz. Pat. Office supra.

constitute the care required under Pratt,[9] and so cannot satisfy the test for diligence and due care.

(By contrast, unintentional delays are those that do not satisfy the very strict statutory and regulatory requirements of unavoidable delay, and also, by definition, are not intentional.[10]))

Allegations as to the Request to
Withdraw the Holding of Abandonment

The courts have determined the construct for properly supporting a petition seeking withdrawal of a holding of abandonment.[11]

The commentary at MPEP §711.03(c) provides:

* * *

A. Petition To Withdraw Holding of Abandonment Based on Failure To Receive Office Action

In *Delgar v. Schulyer*, 172 USPQ 513 (D.D.C. 1971), the court decided that the Office should mail a new Notice of Allowance in view of the evidence presented in support of the contention that the applicant's representative did not receive the original Notice of Allowance. Under the reasoning of *Delgar*, an allegation that an Office action was never received may be considered in a petition to withdraw the holding of abandonment. If adequately supported, the Office may grant the petition to withdraw the holding of abandonment and remail the Office action. That is, the reasoning of *Delgar* is applicable regardless of whether an application is held abandoned for failure to timely pay the issue fee (35 U.S.C. 151) or for failure to prosecute (35 U.S.C. 133). To minimize costs and burdens to practitioners and the Office, the Office has modified the showing required to establish nonreceipt of an Office action. The showing required to establish nonreceipt of an Office communication must include a statement from the practitioner stating that the Office communication was not received by the practitioner and attesting to the fact that a search of the file jacket and docket records indicates that the Office communication was not received. A copy of the

---

[9] Ex parte Pratt, 1887 Dec. Comm'r Pat. 31, 32-33 (Comm'r Pat. 1887) (the term "unavoidable" "is applicable to ordinary human affairs, and requires no more or greater care or diligence than is generally used and observed by prudent and careful men in relation to their most important business"); In re Mattullath, 38 App. D.C. 497, 514-15 (D.C. Cir. 1912); Ex parte Henrich, 1913 Dec. Comm'r Pat. 139, 141 (Comm'r Pat. 1913).

[10] Therefore, by example, an unintentional delay in the reply might occur if the reply and transmittal form are to be prepared for shipment by the US Postal Service, but other pressing matters distract one's attention and the mail is not timely deposited for shipment.

[11] See: Delgar v. Schulyer, 172 USPQ 513 (D.D.C. 1971).

> docket record where the nonreceived Office communication would have been entered had it been received and docketed must be attached to and referenced in practitioner's statement. For example, if a three month period for reply was set in the nonreceived Office action, a copy of the docket report showing all replies docketed for a date three months from the mail date of the nonreceived Office action must be submitted as documentary proof of nonreceipt of the Office action.
>
> * **
>
> The showing outlined above may not be sufficient if there are circumstances that point to a conclusion that the Office action may have been lost after receipt rather than a conclusion that the Office action was lost in the mail (e.g., if the practitioner has a history of not receiving Office actions).
>
> Evidence of nonreceipt of an Office communication or action (e.g., Notice of Abandonment or an advisory action) other than that action to which reply was required to avoid abandonment would not warrant withdrawal of the holding of abandonment. Abandonment takes place by operation of law for failure to reply to an Office action or timely pay the issue fee, not by operation of the mailing of a Notice of Abandonment. See *Lorenz v. Finkl*, 333 F.2d 885, 889-90, 142 USPQ 26, 29-30 (CCPA 1964); *Krahn v. Commissioner*, 15 USPQ2d 1823, 1824 (E.D. Va 1990); *In re Application of Fischer*, 6 USPQ2d 1573, 1574 (Comm'r Pat. 1988). (Emphasis supplied.)
>
> * * *

Moreover, the regulation places upon Petitioner a diligence requirement to seek relief within two (2) months of the act complained of.

It appears that Petitioner has not satisfied the showing requirement herein.

CONCLUSION

Because it appears that Petitioner has not satisfied the burdens herein, the petition as considered under 37 C.F.R. §1.181 is **dismissed**.

ALTERNATIVE VENUE

Petitioner may wish to file a petition to the Commissioner requesting revival of an application abandoned due to unintentional delay under 37 C.F.R. §1.137(b). (See:

http://www.uspto.gov/web/offices/pac/mpep/documents/0700_711_03_c.htm#sect711.03c)[12]

A petition to revive on the grounds of unintentional delay must be filed promptly and such petition must be accompanied by the reply (the amendment), the petition fee, a terminal disclaimer and fee where appropriate and a statement that "the entire delay in filing the required reply from the due date for the reply until the filing of a grantable petition was unintentional." (The statement is in the form available online.)

Further correspondence with respect to this matter should be addressed as follows:[13]

By mail: Commissioner for Patents[14]
P.O. Box 1450
Alexandria, VA 22313-1450

By FAX: IFW Formal Filings
(571) 273-8300
ATTN.: Office of Petitions

By hand: Mail Stop: Petition
Customer Service Window
Randolph Building
401 Dulany Street
Alexandria, VA 22314

[12] See fee schedule: http://www.uspto.gov/main/howtofees.htm

[13] On July 15, 2005, the Central Facsimile (FAX) Number changed to (571) 273-8300. The old FAX number no longer is in service and (571) 273-8300 will be the only facsimile number recognized for centralized delivery. (For further information. see: http://www.uspto.gov/web/offices/pac/dapp/opla/preognotice/cfax062005.pdf .)

[14] To determine the appropriate addresses for other subject-specific correspondence, refer to the USPTO Web site at www.uspto.gov.

While telephone inquiries regarding this decision may be directed to the undersigned at (571) 272-3214, it is noted that all practice before the Office is in writing (see: 37 C.F.R. §1.2[15]) and the proper authority for action on any matter in this regard are the statutes (35 U.S.C.), regulations (37 C.F.R.) and the commentary on policy (MPEP). Therefore, no telephone discussion may be controlling or considered authority for Petitioner's action(s).

John J. Gillon, Jr.
Senior Attorney
Office of Petitions

[15] The regulations at 37 C.F.R. §1.2 provide:

§1.2 Business to be transacted in writing.

All business with the Patent and Trademark Office should be transacted in writing.The personal attendance of applicants or their attorneys or agents at the Patent and Trademark Office is unnecessary. The action of the Patent and Trademark Office will be based exclusively on the written record in the Office. No attention will be paid to any alleged oral promise, stipulation,or understanding in relation to which there is disagreement or doubt.

UNITED STATES PATENT AND TRADEMARK OFFICE

Commissioner for Patents
United States Patent and Trademark Office
P.O. Box 1450
Alexandria, VA 22313-1450
www.uspto.gov

GROSSMAN, TUCKER,
PERREAULT & PFLEGER, PLLC
C/O PORTFOLIO IP
P. O. BOX 52050
MINNEAPOLIS MN 55402

COPY MAILED

MAY 19 2008

OFFICE OF PETITIONS

In re Application of :
Alderrou, et al. :
Application No.: 10/321,048 : DECISION
Filing Date: 16 December, 2002 :
Attorney Docket No. P15224 :

This is a decision on the petition filed on 28 January, 2008, to revive an application under 37 C.F.R. §1.137(b) as having been abandoned due to unintentional delay.

The Office regrets the delay in addressing this matter, however, the instant petition was presented to the attorneys in the Office of Petitions only at this writing.

The petition under 37 C.F.R. §1.137(b) is **GRANTED**.

As to the Allegations
of Unintentional Delay

The requirements of a grantable petition pursuant to 37 C.F.R. §1.137(b) are the petition and fee therefor, a reply, a proper statement of unintentional delay under the regulation, and, where applicable, a terminal disclaimer and fee. (However, it does not appear that a terminal disclaimer and fee are due here.) A two month extension of time is required and charged as authorized to Deposit Account 50-2121.

It appears that Petitioner has satisfied the requirements of the regulation, as set forth below:

BACKGROUND

The record reflects that:

Petitioner failed to reply timely and properly to the non-final Office action mailed on 15 November, 2006, with reply due absent extension of time on or before 15 February, 2007. The application went abandoned by operation of law after midnight 15 February, 2007.

The Office mailed a Notice of Abandonment on 29 May, 2007.

On 5 July, 2007, Petitioner filed a petition under 37 C.F.R. §1.181 with, *inter alia*, an averment that he did not receive a copy of the final Office action, and made a statement of search, provided docket records for the instant application, but not for the due date of the reply as set forth in the guidance of the Commentary at MPEP §711.03(c), and more critically, while Petitioner averred that the Office confirmation document submitted with the petition evidenced that the Office failed to enter the Revocation/Power of Attorney that Petitioner filed by FAX (to (571) 272-8300) on 19 May, 2006, the only document Petitioner provides is a document generated by his FAX machine–and not an Office confirmation document–and further the document provided by Petitioner evidences that his Revocation/Power of Attorney was not filed, but submitted to another FAX number that was/is not the official filing line—and so the petition was dismissed on 24 September, 2007, for failure to comply with the guidance of the Commentary at MPEP §711.03(c).

On 28 January, 2008, Petitioner filed the instant petition (with fee) alleging unintentional delay under 37 C.F.R. §1.137(b), with, *inter alia*, a reply in the form of an amendment, and made the statement and showing of unintentional delay.

The availability of applications and application papers online to applicants/practitioners who diligently associate their Customer Number with the respective application(s) now provides an applicant/practitioner on-demand information as to events/transactions in an application. Thus, now if one wishes to know the progress in and/or status of an application or the accuracy of the data therein, one need only look at the file online.

Out of an abundance of caution, Petitioners always are reminded that those registered to practice *and* all others who make representations before the Office must inquire into the underlying facts of representations made to the Office and support averments with the appropriate documentation–since all owe to the Office the continuing duty to disclose.[1]

STATUTES, REGULATIONS

Congress has authorized the Commissioner to "revive an application if the delay is shown to the satisfaction of the Commissioner to have been "unavoidable." 35 U.S.C. §133 (1994).

---

[1] See supplement of 17 June, 1999. The Patent and Trademark Office is relying on petitioner's duty of candor and good faith and accepting a statement made by Petitioner. See Changes to Patent Practice and Procedure, 62 Fed. Reg. at 53160 and 53178, 1203 Off. Gaz. Pat. Office at 88 and 103 (responses to comments 64 and 109)(applicant obligated under 37 C.F.R. §10.18 to inquire into the underlying facts and circumstances when providing statements to the Patent and Trademark Office). See specifically, the regulations at 37 C.F.R. §10.18.

The regulations at 37 C.F.R. §1.137(a) and (b) set forth the requirements for a Petitioner to revive a previously unavoidably or unintentionally, respectively, abandoned application.[2],[3]

CONCLUSION

The instant petition under 37 C.F.R. §1.137(b) is **granted**.

The instant application is released to Technology Center/AU 2611 for further processing in due course.

Petitioner may find it beneficial to view Private PAIR within a fortnight of the instant decision to ensure that the revival has been acknowledged by the Technology Center/AU in response to this decision. It is noted that all inquiries with regard to that change in status need be directed to the Technology Center/AU where that change of status must be effected—that does not occur in the Office of Petitions.

While telephone inquiries regarding this decision may be directed to the undersigned at (571) 272-3214, it is noted that all practice before the Office is in writing (see: 37 C.F.R. §1.2[4]) and the proper authority for action on any matter in this regard are the statutes (35 U.S.C.), regulations (37 C.F.R.) and the commentary on policy (MPEP). Therefore, no telephone discussion may be controlling or considered authority for Petitioner's action(s).

John J. Gillon, Jr.
Senior Attorney
Office of Petitions

---

[2] See: Changes to Patent Practice and Procedure; Final Rule Notice, 62 Fed. Reg. at 53158-59 (October 10, 1997), 1203 Off. Gaz. Pat. Office at 86-87 (October 21, 1997).

[3] The language of 35 U.S.C. §133 and 37 C.F.R. §1.137(a) is clear, unambiguous, and without qualification: the delay in tendering the reply to the outstanding Office action, as well as filing the first petition seeking revival, must have been unavoidable for the reply now to be accepted on petition. (Therefore, by example, an unavoidable delay in the payment of the Filing Fee might occur if a reply is shipped by the US Postal Service, but due to catastrophic accident, the delivery is not made.) Delays in responding properly raise the question whether delays are unavoidable. Where there is a question whether the delay was unavoidable, Petitioners must meet the burden of establishing that the delay was unavoidable within the meaning of 35 U.S.C. §133 and 37 C.F.R. §1.137(a) And the Petitioner must be diligent in attending to the matter. Failure to do so does not constitute the care required under Pratt, and so cannot satisfy the test for diligence and due care. (By contrast, unintentional delays are those that do not satisfy the very strict statutory and regulatory requirements of unavoidable delay, and also, by definition, are not intentional.))

[4] The regulations at 37 C.F.R. §1.2 provide:

§1.2 Business to be transacted in writing.

All business with the Patent and Trademark Office should be transacted in writing. The personal attendance of applicants or their attorneys or agents at the Patent and Trademark Office is unnecessary. The action of the Patent and Trademark Office will be based exclusively on the written record in the Office. No attention will be paid to any alleged oral promise, stipulation, or understanding in relation to which there is disagreement or doubt.

UNITED STATES PATENT AND TRADEMARK OFFICE

Commissioner for Patents
United States Patent and Trademark Office
P.O. Box 1450
Alexandria, VA 22313-1450
www.uspto.gov

MARGER JOHNSON & MCCOLLOM, P.C. - Intel
210 SW MORRISON STREET, SUITE 400
PORTLAND OR 97204

COPY MAILED

FEB 29 2008

In re Application of
Terry Lee Sterrett et al.
Application No. 10/321,060
Filed: December 17, 2002
Attorney Docket No. 5038-254

ON PETITION

This is a decision on the petition, filed November 7, 2007 under 37 CFR 1.137(b), to revive the above-identified application.

The petition is **DISMISSED**.

Any further petition to revive the above-identified application must be submitted within TWO (2) MONTHS from the mail date of this decision. Extensions of time under 37 CFR 1.136(b) are permitted. The reconsideration request should include a cover letter entitled "Petition under 37 CFR 1.137." This is **not** final agency action within the meaning of 5 U.S.C. § 704.

This application became abandoned for failure to timely reply to the final Office Action mailed December 14, 2006. Accordingly, a Notice of Abandonment was mailed July 13, 2007.

A grantable petition to revive an abandoned application under 37 CFR 1.137(b) must be accompanied by:

(1) the required reply (unless previously filed), which may be met by the filing of a continuing application in a nonprovisional application abandoned for failure to prosecute, but must be the payment of the issue fee or any outstanding balance thereof in an application or patent, abandoned or lapsed for failure to pay the issue fee or any portion thereof;

(2) the petition fee required by 37 CFR 1.17(l);

(3) a statement that the entire delay in filing the required reply from the due date for the reply until the filing of a grantable petition pursuant to 37 CFR 1.137(b) was unintentional. The Commissioner may require additional information where there is a question whether the delay was unintentional; and

(4) a terminal disclaimer (and fee as set forth in 37 CFR 1.20(d)) in a design application, a utility application filed before June 8, 1995, or a plant application filed before June 8, 1995.

The petition does not satisfy requirement (1) above.

The application became abandoned for failure to file a response within the meaning of 37 CFR 1.113 to the final rejection of December 14, 2006, within the time period for response. The only proper reply to a final Office action is an amendment placing the application in *prima facie* condition for allowance, a Notice of Appeal accompanied by the requisite fee, a Request for Continued Examination (RCE) accompanied by a proper submission, or a continuing application. Since the amendment submitted with the petition has been referred to the examiner, who has indicated that the amendment does not prima facie place the application in condition for allowance, the response required for a renewed petition must be a Notice of Appeal and requisite fee, or the filing of a continuing application under the terms set forth in 1031 O.G. 11. A courtesy copy of an Advisory Action drafted by the Examiner of Record is included with this decision.

Petitioner must submit a proper reply to the final Office action mailed on December 14, 2006, with any renewed petition. **Petitioner should note that submission of any renewed petition without the required reply will be construed as intentional delay.**

Further correspondence with respect to this matter should be addressed as follows:

By mail: Mail Stop Petitions
Commissioner for Patents
P.O. Box 1450
Alexandria VA 22313-1450

By FAX: (571) 273-8300
ATTN: Office of Petitions

Telephone inquiries concerning this matter may be directed to the undersigned Petitions Attorney at (571) 272-3212.

Patricia Faison-Ball
Senior Petitions Attorney
Office of Petitions

UNITED STATES PATENT AND TRADEMARK OFFICE

Commissioner for Patents
United States Patent and Trademark Office
P.O. Box 1450
Alexandria, VA 22313-1450
www.uspto.gov

MARGER JOHNSON & MCCOLLOM, P.C. - Intel
210 SW MORRISON STREET, SUITE 400
PORTLAND OR 97204

COPY MAILED

JUN 19 2008

OFFICE OF PETITIONS

In re Application of
Terry Lee Sterrett et al.
Application No. 10/321,060
Filed: December 17, 2002
Attorney Docket No. 5038-254

ON PETITION

This is a decision on the renewed petition, filed May 28, 2008 under 37 CFR 1.137(b)[1], to revive the above-identified application.

The petition is **GRANTED**.

This application became abandoned for failure to timely reply to the final Office Action mailed December 14, 2006. Accordingly, a Notice of Abandonment was mailed July 13, 2007. A petition to revive filed November 7, 2007 was dismissed in a decision mailed February 29, 2008 because the amendment filed did not prima facie place the application in condition for allowance.

Comes now petitioner with the instant renewed petition, a Request for Continued Examination (RCE) and an amendment as the submission required under 37 CFR 1.114.

Since the decision on petition was mailed February 29, 2008 and the decision set a two month period for reply, petitioner's deposit account no. 13-703 has been charged in the amount of $60 for a one month extension of time to make the response timely.

---

[1]A grantable petition to revive an abandoned application under 37 CFR 1.137(b) must be accompanied by:

(1) the required reply (unless previously filed), which may be met by the filing of a continuing application in a nonprovisional application abandoned for failure to prosecute, but must be the payment of the issue fee or any outstanding balance thereof in an application or patent, abandoned or lapsed for failure to pay the issue fee or any portion thereof;

(2) the petition fee required by 37 CFR 1.17(l);

(3) a statement that the entire delay in filing the required reply from the due date for the reply until the filing of a grantable petition pursuant to 37 CFR 1.137(b) was unintentional. The Commissioner may require additional information where there is a question whether the delay was unintentional; and

(4) a terminal disclaimer (and fee as set forth in 37 CFR 1.20(d)) in a design application, a utility application filed before June 8, 1995, or a plant application filed before June 8, 1995.

This matter is being referred to Technology Center 1775 for processing of the RCE.

Telephone inquiries concerning this matter may be directed to the undersigned Petitions Attorney at (571) 272-3212.

Patricia Faison-Ball
Senior Petitions Attorney
Office of Petitions

UNITED STATES PATENT AND TRADEMARK OFFICE

Commissioner for Patents
United States Patent and Trademark Office
P.O. Box 1450
Alexandria, VA 22313-1450
www.uspto.gov

ANDRE L. MARAIS
SCHWEGMAN LUNDBERG WOESSNER & KLUTH PA
1600 TCF TOWER
121 SOUTH EIGHTH STREET
MINNEAPOLIS, MN 55402

COPY MAILED

DEC 10 2004

OFFICE OF PETITIONS

In re Application of :
Frank W. Fransdonk :
Application No. 10/321,061 : NOTICE
Filed: December 16, 2002 :
For: METHOD AND SYSTEM TO STORE AND DISTRIBUTE ENCRYPTION KEYS :

This is a notice regarding your request for acceptance of a fee deficiency submission under 37 CFR 1.28. On September 1, 1998, the Court of Appeals for the Federal Circuit held that 37 CFR 1.28(c) is the sole provision governing the time for correction of the erroneous payment of the issue fee as a small entity. **See DH Technology v. Synergystex International, Inc. 154 F.3d 1333, 47 USPQ2d 1865 (Fed. Cir. Sept. 1, 1998).**

The Office no longer investigates or rejects original or reissue applications under 37 CFR 1.56. **1098 Off. Gaz. Pat. Office 502 (January 3, 1989).** Therefore, nothing in this Notice is intended to imply that an investigation was done.

Your fee deficiency submission under 37 CFR 1.28 is hereby **ACCEPTED.**

This application no longer qualifies for small entity status. Accordingly, all future fees must be paid at the large entity rate.

Inquiries related to this communication should be directed to the undersigned at (571) 272-3218.

This matter is being referred to Technology Center AU 2131 for appropriate action on the "Amendment and Response to Office Action," filed October 8, 2004.

Frances Hicks
Petitions Examiner
Office of Petitions
Office of the Deputy Commissioner
for Patent Examination Policy

UNITED STATES PATENT AND TRADEMARK OFFICE

Commissioner for Patents
United States Patent and Trademark Office
P.O. Box 1450
Alexandria, VA 22313-1450
www.uspto.gov

BLAKELY SOKOLOFF TAYLOR & ZAFMAN
12400 WILSHIRE BOULEVARD
SEVENTH FLOOR
LOS ANGELES, CA 90025-1030

COPY MAILED

AUG 1 0 2004

OFFICE OF PETITIONS

In re Application of :
Robert W. Fransdonk :
Application No. 10/321,062 : NOTICE
Filed: December 16, 2002 :
Attorney Docket No. 5782P001C5 :

This is a notice regarding your request for acceptance of a fee deficiency submission under 37 CFR 1.28. On September 1, 1998, the Court of Appeals for the Federal Circuit held that 37 CFR 1.28(c) is the sole provision governing the time for correction of the erroneous payment of the issue fee as a small entity. **See DH Technology v. Synergystex International, Inc. 154 F.3d 1333, 47 USPQ2d 1865 (Fed. Cir. Sept. 1, 1998).**

The Office no longer investigates or rejects original or reissue applications under 37 CFR 1.56. **1098 Off. Gaz. Pat. Office 502 (January 3, 1989).** Therefore, nothing in this Notice is intended to imply that an investigation was done.

Your fee deficiency submission under 37 CFR 1.28 is hereby **ACCEPTED.**

This application no longer qualifies for small entity status. Accordingly, all future fees must be paid at the large entity rate.

Inquiries related to this communication should be directed to the undersigned Staff at (703) 305-8680.

Frances Hicks
Petitions Examiner
Office of Petitions
Office of the Deputy Commissioner
for Patent Examination Policy

UNITED STATES PATENT AND TRADEMARK OFFICE

Commissioner for Patents
United States Patent and Trademark Office
P.O. Box 1450
Alexandria, VA 22313-1450
www.uspto.gov

BLAKELY SOKOLOFF TAYLOR & ZAFMAN
12400 WILSHIRE BOULEVARD
SEVENTH FLOOR
LOS ANGELES, CA 90025-1030

COPY MAILED

SEP 14 2004

OFFICE OF PETITIONS

In re Application of :
Robert W. Fransdonk :
Application No. 10/321,075 : ON PETITION
Filed: December 16, 2002 :
Attorney Docket No. 5782P001C :

This is a notice regarding your request for acceptance of a fee deficiency submission under 37 CFR 1.28. On September 1, 1998, the Court of Appeals for the Federal Circuit held that 37 CFR 1.28(c) is the sole provision governing the time for correction of the erroneous payment of the issue fee as a small entity. **See DH Technology v. Synergystex International, Inc. 154 F.3d 1333, 47 USPQ2d 1865 (Fed. Cir. Sept. 1, 1998).**

The Office no longer investigates or rejects original or reissue applications under 37 CFR 1.56. **1098 Off. Gaz. Pat. Office 502 (January 3, 1989)**. Therefore, nothing in this Notice is intended to imply that an investigation was done.

Your fee deficiency submission under 37 CFR 1.28 is hereby **ACCEPTED**.

Telephone inquiries concerning this decision should be directed to the undersigned at (703) 306-5594.

Retta Williams

Retta Williams
Petitions Examiner
Office of Petitions
Office of the Deputy Commissioner
for Patent Examination Policy

BEST AVAILABLE COPY

UNITED STATES PATENT AND TRADEMARK OFFICE

Commissioner for Patents
United States Patent and Trademark Office
P.O. Box 1450
Alexandria, VA 22313-1450
www.uspto.gov

Blakely Sokoloff Taylor & Zafman
12400 Wilshire Boulevard
7th Floor
Los Angeles, CA 90025-1030

MAILED

MAR 11 2005

Technology Center 2100

In re Application of:
Robert W. FRANSDONK
Application No.: 10/321,075
Filed: December 16, 2002
For: METHOD AND SYSTEM TO SECURELY DISTRIBUTE CONTENT VIA A NETWORK

DECISION ON REQUEST TO WITHDRAW AS ATTORNEY OR AGENT

This is a decision on the Request to Withdraw from Representation filed October 18, 2004.

A grantable request to withdraw as attorney of record should indicate thereon the present mailing addresses of the attorney(s) who is/are withdrawing from the record and of the applicant. The request for withdrawal must be signed by every attorney seeking to withdraw or contain a clear indication that one attorney is signing on behalf of another/others. A request to withdraw will not be approved unless at least 30 (thirty) days would remain between the date of approval and the later of the expiration date of a time to file a response or the expiration date of the maximum time period which can be extended under 37 C.F.R. § 1.136(a). The effective date of withdrawal being the date of decision and not the date of request. See M.P.E.P. § 402.06. 37 C.F.R. § 1.36 further requires that the applicant or patent owner be notified of the withdrawal of the attorney or agent.

The request is **GRANTED**.

All future communications from the Office will be directed to the below-listed address until otherwise notified by applicant. This correspondence address is provided by the withdrawn attorney(s). Applicant is reminded of the obligation to promptly notify the Patent and Trademark Office (Office) of any change in correspondence address to ensure receipt of all communications from the Office.

For

Vincent N. Trans
Special Program Examiner
Technology Center 2100
Computer Architecture, Software, and
Information Security
571-272-3613

cc: Andre Marais
Schwegman, Lundberg, Woessner & Kluth, P.A.
121 South Eighth Street
1600 TCF Tower
Minneapolis, MN 55402

SPE RESPONSE FOR CERTIFICATE OF CORRECTION

Paper No.: X

DATE : **September 26,2007**

TO SPE OF : ART UNIT **2131**

SUBJECT : Request for Certificate of Correction for Appl. No.: **10/321,075** Patent No.: **7228427 B2**

A response is requested with respect to a request for a certificate of correction.

With respect to the change(s) requested to correct Office and/or Applicant's errors, should the patent read as shown in the certificate of correction attached herewith or the COCIN document(s), in IFW images for the above-identified patented application? No new matter should be introduced, nor should the scope or meaning of the claims be changed.

If the response is for an IFW, within **7** days, please complete and forward the response, to the employee (named below) via scanning into application images, using document code **COCX**.

DO NOT SENT TO ATTORNEY

If the response is for a paper file wrapper, please complete the response and forward the response with the paper file wrapper, to the employee (named below), within **7** days, to:

Certificates of Correction Branch (CofC)
South Tower - 9A22
Palm Location 7580

LAMONTE NEWSOME
Certificates of Correction Branch
703-308-9390 ext. 112

Thank You For Your Assistance

The request for issuing the above-identified correction(s) is hereby:

Note your decision on the appropriate box.

- ☒ **Approved** — **All** changes apply.
- ☐ **Approved in Part** — Specify below which changes **do not** apply.
- ☐ **Denied** — State the reasons for denial below.

Comments: okay to enter

SPE 2131 **Art Unit**

UNITED STATES PATENT AND TRADEMARK OFFICE

COMMISSIONER FOR PATENTS
UNITED STATES PATENT AND TRADEMARK OFFICE
P.O. BOX 1450
ALEXANDRIA, VA 22313-1450
www.uspto.gov

Paper No. 11

Brian M. Hoffman
FENWICK & WEST L.L.P.
Silicon Valley Center
801 California Street
Mountain View, CA 94041

MAILED

JUN 18 2004

Technology Center 2100

In re Application of:
Timo S. Kissel
Application No. 10/321,079
Filed: December 16, 2002
For: PROACTIVE PROTECTION AGAINST E-MAIL WORMS AND SPAM

DECISION ON REQUEST TO WITHDRAW AS ATTORNEY OR AGENT

This is a decision on the Request To Withdraw from Representation filed June 07, 2004.

A grantable request to withdraw as attorney of record should indicate thereon the present mailing addresses of the attorney(s) who is/are withdrawing from the record and of the applicant. The request for withdrawal must be signed by every attorney seeking to withdraw or contain a clear indication that one attorney is signing on behalf of another/others. A request to withdraw will not be approved unless at least 30 (thirty) days would remain between the date of approval and the later of the expiration date of a time to file a response or the expiration date of the maximum time period which can be extended under 37 C.F.R. § 1. 136(a). The effective date of withdrawal being the date of decision and not the date of request. See M.P.E.P. § 402.06. 37 C.F.R. § 1.36 further requires that the applicant or patent owner be notified of the withdrawal of the attorney or agent.

The request filed June 07, 2004 meets all the requirements. Accordingly the request is **GRANTED**.

All future communications from the Office will be directed to the below-listed address until otherwise notified by applicant. This correspondence address is provided by the withdrawn attorney(s). Applicant is reminded of the obligation to promptly notify the Patent and Trademark Office (Office) of any change in correspondence address to ensure receipt of all communications from the Office.

James R. Matthews

FM Vincent N. Trans
Special Program Examiner
Technology Center 2100
Computer Architecture, Software, and
Information Security
703-305-9750

cc: Edward J. Radlo
SONNENSCHEIN NATH & ROSENTHAL LLP
685 Market Street, 6th Floor
San Francisco, CA 94105

UNITED STATES PATENT AND TRADEMARK OFFICE

Commissioner for Patents
United States Patent and Trademark Office
P.O. Box 1450
Alexandria, VA 22313-1450
www.uspto.gov

Paper No. 8

BLAKELY SOKOLOFF TAYLOR & ZAFMAN
12400 WILSHIRE BOULEVARD
SEVENTH FLOOR
LOS ANGELES CA 90025-1030

COPY MAILED

SEP 16 2004

OFFICE OF PETITIONS

In re Application of :
Robert W. Fransdonk : NOTICE
Application No. 10/321,105 :
Filed: December 16, 2002 :
Attorney Docket No. 5782P001C6 :

This is a notice regarding your request for acceptance of a fee deficiency submission under 37 CFR 1.28(c), filed July 27, 2004.

37 CFR 1.28(c) states: "The deficiency is based on the amount of the fee, for other than a small entity, in effect at the time the deficiency is paid in full." Accordingly, the fee deficiency submission under 37 CFR 1.28 is hereby **accepted**.

The change of status to a large entity has been entered and made of record.

This application will be referred to Technology Center Art Unit 2131 for examination in due course.

Telephone inquiries concerning this matter may be directed to the undersigned at (703) 306-5589.

Christina Tartera Donnell

Christina Tartera Donnell
Senior Petitions Attorney
Office of Petitions

UNITED STATES PATENT AND TRADEMARK OFFICE

Commissioner for Patents
United States Patent and Trademark Office
P.O. Box 1450
Alexandria, VA 22313-1450
www.uspto.gov

MAILED

JAN 1 8 2005

Technology Center 2100

JENKENS & GILCHRIST
1401 MCKINNEY
SUITE 2600
HOUSTON TX 77010

In re Application of: Thomas, et al.
Application No. 10/321,107
Filed: December 17, 2002
For: METHOD AND SYSTEM FOR INTEGRATED ASSET MANAGEMENT

DECISION ON PETITION FOR ACCELERATED EXAMINATION UNDER M.P.E.P.§708.02(II)

This is a decision on the petition filed November 9, 2004 under 37 C.F.R. 102(d) and M.P.E.P. § 708.02(II): Infringement, to make the above-identified application special.

The Petition is **GRANTED**.

M.P.E.P. § 708.02, Section II which sets out the prerequisites for a grantable petition for Accelerated Examination under 37 C.F.R. § 102(d) states in relevant part:

A new application (one which has not received any examination by the examiner) may be granted special status provided that applicant (and this term includes applicant's attorney or agent) complies with each of the following items:

(a) Submits a petition to make special accompanied by the fee set forth in **37 CFR 1.17(h)**;

(b) A statement by the applicant, assignee, or an attorney/agent registered to practice before the Office alleging:

(1) That there is an infringing device or product actually on the market or method in use;

(2) That a rigid comparison of the alleged infringing device, product, or method with the claims of the application has been made, and that, in his or her opinion, some of the claims are unquestionably infringed; and

(3) That he or she has made or caused to be made a careful and thorough search of the prior art or has a good knowledge of the pertinent prior art.

(c) Applicant must provide one copy of each of the references deemed most closely related to the subject matter encompassed by the claims if said references are not already of record.

Petition to Make Special **GRANTED** since all of the requirements for special status under MPEP § 708.02(II) have been met.

The application file is being forwarded to the Examiner for accelerated examination in accordance with the procedures set forth in M.P.E.P. §708.02, Section II. If the application is subsequently allowed, it will be given priority for printing. See M.P.E.P. §1309.

4/14/05

Brian L. Johnson
Special Program Examiner
Technology Center 2100
Computer Architecture, Software and Information Security
571-272-3595

MBS

UNITED STATES PATENT AND TRADEMARK OFFICE

UNITED STATES DEPARTMENT OF COMMERCE
United States Patent and Trademark Office
Address: COMMISSIONER FOR PATENTS
P.O. Box 1450
Alexandria, Virginia 22313-1450
www.uspto.gov

Meyertons, Hood, Kivlin, Kowert, Goetzel/Symantec
P.O. Box 398
Austin, TX 78767-0398

Mail Date: 04/20/2010

Applicant	: Laxmikant Gunda	: DECISION ON REQUEST FOR
Patent Number	: 7664991	: RECALCULATION of PATENT
Issue Date	: 02/16/2010	: TERM ADJUSTMENT IN VIEW
Appliction No	: 10/321,120	: OF WYETH AND NOTICE OF INTENT TO
Filed	: 12/17/2002	: ISSUE CERTIFICATE OF CORRECTION
		:

The Request for Recalculation is **GRANTED** to the extent indicated.

The patent term adjustment has been determined to be **1027** days. The USPTO will *sua sponte* issue a certificate of correction reflecting the amount of PTA days determined by the recalculation.

Prior to the issuance of the certificate of correction, the USPTO will afford patentee an opportunity to be heard and request reconsideration. Accordingly, patentee has **one month or thirty (30) days**, whichever is longer, to file a request for reconsideration of this patent term adjustment calculation. See 35 U.S.C. 154(b)(3)(B)(ii) and 37 CFR 1.322(a)(4). No extensions of time will be granted under 37 CFR 1.136.

Patentee should use document code PET.OP if electronically filing a request for reconsideration of this patent term adjustment calculation. The patentee must also include the information required by 37 CFR 1.705(b)(2) and the fee required by 37 CFR 1.18(e). If patentee does not file a timely request for reconsideration of this patent term adjustment calculation including the information required by 37 CFR 1.705(b)(2) and the fee required by 37 CFR 1.18(e), the USPTO will issue a certificate of correction reflecting the PTA determination noted above.

Patentee should be aware that in order to preserve the right to review in the United States District Court for the District of Columbia of the USPTO patent term adjustment determination, patentee must ensure that he or she also take the steps required under 35 U.S.C. 154(b)(4)(A) in a timely manner. Nothing in the request for recalculation should be construed as providing an alternative time frame for commencing a civil action under 35 U.S.C. 154(b)(4)(A).

Any questions concerning this decision should be directed to the Office of Patent Legal Administration at 571-272-7702.

SPE RESPONSE FOR CERTIFICATE OF CORRECTION

Paper No.: _____

DATE : 4-18-05

TO SPE OF : ART UNIT 2876

SUBJECT : Request for Certificate of Correction on Patent No.: 6,757,061

A response is requested with respect to the accompanying request for a certificate of correction.

Please complete this form and return with file, within **7** days to:
Certificates of Correction Branch - PK 3-915
Palm location **7580** - Tel. No. 305-8309

With respect to the change(s) requested, correcting Office and/or Applicant's errors, should the patent read as shown in the certificate of correction? No new matter should be introduced, nor should the scope or meaning of the claims be changed.

Magdalene Talley

Thank You For Your Assistance — **Certificates of Correction Branch**

The request for issuing the above-identified correction(s) is hereby:
Note your decision on the appropriate box.

- ☑ **Approved** — All changes apply.
- ☐ **Approved in Part** — Specify below which changes **do not** apply.
- ☐ **Denied** — State the reasons for denial below.

Comments:

TILE

PTO/SB/44 (07-03)
Approved for use through 01/31/2004. OMB 0651-0033
U.S. Patent and Trademark Office; U.S. DEPARTMENT OF COMMERCE
Under the Paperwork Reduction Act of 1995, no persons are required to respond to a collection of information unless it displays a valid OMB control number.
(Also Form PTO-1050)

UNITED STATES PATENT AND TRADEMARK OFFICE
CERTIFICATE OF CORRECTION

PATENT NO. : 6,757,061 B2

DATED : 29 June 2004

INVENTOR(S) : Gary Powell

It is certified that error appears in the above-identified patent and that said Letters Patent is hereby corrected as shown below:

Please restate dependent claims 56-57 and 60-63 as follows:

56. The method of claim 55, wherein displaying includes graphing a measure of intensity of at least a portion of the detected wave bands and reporting numeric values for the measure of intensity and the wave length of a user selected point on the graph.

57. The method of claim 55, wherein displaying includes representing a measure of intensity of at least a portion of the detected wave bands by a line graph and by an intensity graph.

60. The method of claim 55, wherein displaying includes user selection of a plurality of wave lengths and a strip chart display of the selected wave lengths.

61. The method of claim 55, wherein displaying includes user selection of an algebraic combination of a plurality of wave lengths and a strip chart display of the algebraic combination.

62. The method of claim 55, wherein displaying includes user selection of a derivative function of a wave length and a strip chart display of the wave length and the derivative function.

63. The method of claim 55, wherein displaying includes user selection of parameters for integration time for the detection of the wave bands, number of the integrated detections averaged, and smoothing of the averaged integrated detections.

MAILING ADDRESS OF SENDER:

HAYNES BEFFEL & WOLFELD LLP
P.O. Box 366
Half Moon Bay, CA 94019

PATENT NO. 6,757,061

No. of additional copies

This collection of information is required by 37 CFR 1.322, 1.323, and 1.324. The information is required to obtain or retain a benefit by the public which is to file (and by the USPTO to process) an application. Confidentiality is governed by 35 U.S.C. 122 and 37 CFR 1.14. This collection is estimated to take 1.0 hour to complete, including gathering, preparing, and submitting the completed application form to the USPTO. Time will vary depending upon the individual case. Any comments on the amount of time you require to complete this form and/or suggestions for reducing this burden, should be sent to the Chief Information Officer, U.S. Patent and Trademark Office, U.S. Department of Commerce, P.O. Box 1450, Alexandria, VA 22313-1450. DO NOT SEND FEES OR COMPLETED FORMS TO THIS ADDRESS. SEND TO: **Attention Certificate of Corrections Branch, Commissioner for Patents, P.O. Box 1450, Alexandria, VA 22313-1450.**

If you need assistance in completing the form, call 1-800-PTO-9199 and select option 2.

FEB 17 2005

UNITED STATES PATENT AND TRADEMARK OFFICE

Commissioner for Patents
United States Patent and Trademark Office
P.O. Box 1450
Alexandria, VA 22313-1450
www.uspto.gov

KENYON & KENYON LLP
ONE BROADWAY
NEW YORK NY 10004

COPY MAILED

JUL 17 2006

OFFICE OF PETITIONS

In re Application of :
Rudhard et al. :
Application No. 10/321,134 : ON PETITION
Filed: December 17, 2002 :
Title: Integrated Detonating or Firing Element, :
and Use Thereof

This is a decision on the petition under 37 CFR 1.181 to withdraw the holding of abandonment, filed August 11, 2005. In the alternative, petitioner has requested the petition be treated under 37 CFR 1.137(b).

The petition to withdraw the holding of abandonment is **Dismissed**.
The petition to revive under 37 CFR 1.137(b) is **Granted**.

This above-identified application became abandoned for failure to timely file a complete reply to the non-final Office Action of April 6, 2004. An amendment was filed on July 6, 2004. In response to the amendment a Notice of Non-Compliant Amendment (37 CFR 1.121) was mailed on July 19, 2004 which set an extendable reply period of one month. A reply to the Notice of Non-Compliant Amendment was not received. This application became abandoned on August 20, 2004. A Notice of Abandonment was mailed on June 13, 2005.

Petitioner contends that he spoke to the signor of the Notice of Non-Compliant Amendment (Ms. Baltimore) and Ms. Baltimore agreed to enter the response and the Notice would be withdrawn.

Petitioner's argument has been considered but it is not convincing to establish the holding of abandonment should be withdrawn.

Pursuant to 37 CFR 1.2 All business with the Patent and Trademark Office should be transacted in writing. The personal attendance of applicants or their attorneys or agents at the Patent and Trademark Office is unnecessary. The action of the Patent and Trademark Office will be based exclusively on the written record in the Office. No attention will be paid to any alleged oral promise, stipulation, or understanding in relation to which there is disagreement or doubt. A review of the record does not show that the Notice of Non-Compliant Amendment was withdrawn. Nor is there an indication that petitioner replied to the Notice.

Alternative Venue

In the alternative, petitioner has requested the above petition be treated under 37 CFR 1.137(b).

The requirements for the filing of a grantable petition under 37 CFR §1.137(b) have been met. This petition is hereby **Granted**.

Telephone inquiries concerning this matter should be directed to the undersigned at (571) 272-3215.

Charlema R. Grant
Petitions Attorney
Office of Petitions

UNITED STATES PATENT AND TRADEMARK OFFICE

Commissioner for Patents
United States Patent and Trademark Office
P.O. Box 1450
Alexandria, VA 22313-1450
www.uspto.gov

CROCKETT & CROCKETT
24012 CALLE DE LA PLATA
SUITE 400
LAGUNA HILLS, CA 92653

COPY MAILED

MAR 1 4 2005

OFFICE OF PETITIONS

In re Application of :
Van Bladel et al. :
Application No. 10/321,136 : ON PETITION
Filed: December 16, 2002 :
Attorney Docket No. 212-444 :

This is a decision on the petition under 37 C.F.R. § 1.137(b), filed March 4, 2005, to revive the above-identified application.

The petition is **GRANTED.**

This application became abandoned for failure to timely reply to the final Office action mailed September 1, 2004. No extensions of time under the provisions of 37 CFR 1.136(a) were timely obtained. Accordingly, this application became abandoned on December 2, 2004.

An extension of time under 37 CFR 1.136 must be filed prior to the expiration of the maximum extendable period for reply. See In re Application of S., 8 USPQ2d 1630, 1631 (Comm'r Pats. 1988). Accordingly, since authorization to charge the $510.00 extension of time fee was submitted with the petition on March 4, 2005, it was subsequent to the maximum extendable period for reply, this fee is unnecessary and will not be charged to petitioner's deposit account.

Petitioner has met the requirements to revive the above-identified application pursuant to 37 CFR 1.137(b).

This matter is being referred to Technology Center 3700 for processing of the Request for Continued Examination under 37 CFR 1.114 filed with the instant petition.

Telephone inquiries regarding this decision should be directed to the undersigned at (571) 272-3282.

Liana Chase
Petitions Examiner
Office of Petitions
Office of the Deputy Commissioner
for Patent Examination Policy

SPE RESPONSE FOR CERTIFICATE OF CORRECTION

Paper No.: X

DATE : June 30, 2008

TO SPE OF : ART UNIT 1647

SUBJECT : Request for Certificate of Correction for Appl. No.: 10/321144 Patent No.: 7294624 B2

A response is requested with respect to a request for a certificate of correction.

With respect to the change(s) requested to correct Office and/or Applicant's errors, should the patent read as shown in the certificate of correction attached herewith or the COCIN document(s), in IFW images for the above-identified patented application? No new matter should be introduced, nor should the scope or meaning of the claims be changed.

If the response is for an IFW, within **7** days, please complete and forward the response, to the employee (named below) via scanning into application images, using document code **COCX**.

DO NOT SENT TO ATTORNEY

If the response is for a paper file wrapper, please complete the response and forward the response with the paper file wrapper, to the employee (named below), within **7** days, to:

Certificates of Correction Branch (CofC)
South Tower - 9A22
Palm Location 7580

You can fax the Directors/SPE response to 571-270-9990

LAMONTE NEWSOME
Certificates of Correction Branch
703-308-9390 ext. 112

Thank You For Your Assistance

The request for issuing the above-identified correction(s) is hereby:
Note your decision on the appropriate box.

- [X] **Approved** — **All** changes apply.
- [ ] **Approved in Part** — Specify below which changes **do not** apply.
- [ ] **Denied** — State the reasons for denial below.

Comments: _____

SPE

1624
Art Unit

UNITED STATES PATENT AND TRADEMARK OFFICE

Commissioner for Patents
United States Patent and Trademark Office
P.O. Box 1450
Alexandria, VA 22313-1450
www.uspto.gov

HOWREY LLP
C/O DOCKETING DEPARTMENT
2941 FAIRVIEW PARK DRIVE,
SUITE 200
FALLS CHURCH, VA 22042-7195

COPY MAILED

FEB 21 2006

OFFICE OF PETITIONS

In re Application of :
Thomas C. Merigan et al :
Application No. 10/321,162 : ON PETITION
Filed: December 16, 2002 :
Attorney Docket No. 12665.0015.DVUS02 :

This is a decision on the petition, filed February 10, 2006, under 37 CFR 1.313(c)(2) to withdraw the above-identified application from issue after payment of the issue fee.

The petition is **GRANTED.**

The above-identified application is withdrawn from issue for consideration of a submission under 37 CFR 1.114 (request for continued examination). See 37 CFR 1.313(c)(2).

Petitioner is advised that the issue fee paid on September 29, 2005, in the above-identified application cannot be refunded. If, however, the above-identified application is again allowed, petitioner may request that it be applied towards the issue fee required by the new Notice of Allowance.[1]

Telephone inquiries should be directed to the undersigned at (571) 272-3208.

The examiner of Technology Center AU 1634 will consider the request for continued examination under 37 CFR 1.114.

Karen Creasy

Karen Creasy
Petitions Examiner
Office of Petitions
Office of the Deputy Commissioner
for Patent Examination Policy

---

[1] The request to apply the issue fee to the new Notice may be satisfied by completing and returning the new Issue Fee Transmittal Form PTOL-85(b), which includes the following language thereon: "Commissioner for Patents is requested to apply the Issue Fee and Publication Fee (if any) or re-apply any previously paid issue fee to the application identified above." Petitioner is advised that, whether a fee is indicated as being due or not, the Issue Fee Transmittal Form **must** be completed and timely submitted to avoid abandonment. Note the language in bold text on the first page of the Notice of Allowance and Fee(s) Due (PTOL-85).

UNITED STATES PATENT AND TRADEMARK OFFICE

UNITED STATES DEPARTMENT OF COMMERCE
United States Patent and Trademark Office
Address: COMMISSIONER FOR PATENTS
P.O. Box 1450
Alexandria, Virginia 22313-1450
www.uspto.gov

ZYMOGENETICS, INC.
INTELLECTUAL PROPERTY DEPARTMENT
1201 EASTLAKE AVENUE EAST
SEATTLE, WA 98102-3702

Mail Date: 04/21/2010

Applicant	: Yasmin A. Chandrasekher	: DECISION ON REQUEST FOR
Patent Number	: 7582287	: RECALCULATION of PATENT
Issue Date	: 09/01/2009	: TERM ADJUSTMENT IN VIEW
Appliction No	: 10/321,163	: OF WYETH AND NOTICE OF INTENT TO
Filed	: 12/17/2002	: ISSUE CERTIFICATE OF CORRECTION
		:

The Request for Recalculation is **GRANTED** to the extent indicated.

The patent term adjustment has been determined to be **863** days. The USPTO will *sua sponte* issue a certificate of correction reflecting the amount of PTA days determined by the recalculation.

Prior to the issuance of the certificate of correction, the USPTO will afford patentee an opportunity to be heard and request reconsideration. Accordingly, patentee has **one month or thirty (30) days**, whichever is longer, to file a request for reconsideration of this patent term adjustment calculation. See 35 U.S.C. 154(b)(3)(B)(ii) and 37 CFR 1.322(a)(4). No extensions of time will be granted under 37 CFR 1.136.

Patentee should use document code PET.OP if electronically filing a request for reconsideration of this patent term adjustment calculation. The patentee must also include the information required by 37 CFR 1.705(b)(2) and the fee required by 37 CFR 1.18(e). If patentee does not file a timely request for reconsideration of this patent term adjustment calculation including the information required by 37 CFR 1.705(b)(2) and the fee required by 37 CFR 1.18(e), the USPTO will issue a certificate of correction reflecting the PTA determination noted above.

Patentee should be aware that in order to preserve the right to review in the United States District Court for the District of Columbia of the USPTO patent term adjustment determination, patentee must ensure that he or she also take the steps required under 35 U.S.C. 154(b)(4)(A) in a timely manner. Nothing in the request for recalculation should be construed as providing an alternative time frame for commencing a civil action under 35 U.S.C. 154(b)(4)(A).

Any questions concerning this decision should be directed to the Office of Patent Legal Administration at 571-272-7702.

UNITED STATES PATENT AND TRADEMARK OFFICE

Commissioner for Patents
United States Patent and Trademark Office
P.O. Box 1450
Alexandria, VA 22313-1450
www.uspto.gov

MAILED

MAR 15 2010

OFFICE OF PETITIONS

Townsend and Townsend and Crew LLP/Metabox, Inc
(016325)
Two Embarcadero Center, 8th Floor
San Francisco CA 94111

In re Patent No. 7,510,851 : DECISION ON APPLICATION FOR
Issued: March 31, 2009 : PATENT TERM ADJUSTMENT and
Application No. 10/321,204 : NOTICE OF INTENT TO ISSUE
Filed: December 16, 2002 : CERTIFICATE OF CORRECTION
Dkt. No.: 016325-007310US :

This is a decision on the petition filed on April 6, 2009, which is being treated as a petition under 37 CFR 1.705(d) requesting that the patent term adjustment indicated on the above-identified patent be corrected to indicate that the term of the above-identified patent is extended or adjusted by 1,548 days.

The petition to correct the patent term adjustment indicated on the above-identified patent to indicate that the term of the above-identified patent is extended or adjusted by 1,548 days is **GRANTED**.

The Office acknowledges submission of the $200.00 fee set forth in 37 CFR 1.18(e). No additional fees are required.

The application is being forwarded to the Certificates of Corrections Branch for issuance of a certificate of correction. The Office will issue a certificate of correction indicating that the term of the above-identified patent is extended or adjusted by 1548 days.

Telephone inquiries specific to this matter should be directed to the undersigned at (571) 272-3205.

/ALESIA M. BROWN/

Alesia M. Brown
Senior Petitions Attorney
Office of Petitions

Enclosure: Copy of DRAFT Certificate of Correction

UNITED STATES PATENT AND TRADEMARK OFFICE

CERTIFICATE OF CORRECTION

PATENT : 7,510,851

DATED : **March 31, 2009** **DRAFT**

INVENTOR(S) : Waters, et al.

It is certified that error appears in the above-identified patent and that said Letters Patent is hereby corrected as shown below:

On the cover page,

[*] Notice: Subject to any disclaimer, the term of this patent is extended or adjusted under 35 USC 154(b) by 874 days

Delete the phrase "by 874 days" and insert – by 1548 days--

UNITED STATES PATENT AND TRADEMARK OFFICE

Commissioner for Patents
United States Patent and Trademark Office
P.O. Box 1450
Alexandria, VA 22313-1450
www.uspto.gov

BLAKELY SOKOLOFF TAYLOR & ZAFMAN LLP
1279 OAKMEAD PARKWAY
SUNNYVALE CA 94085-4040

COPY MAILED

JUN 06 2008

OFFICE OF PETITIONS

In re Application of	:	
Lam et al.	:	
Application No.: 10/321221	:	ON PETITION
Filing or 371(c) Date: 12/16/2002	:	
Attorney Docket Number:	:	
6437P001	:	

This is a decision on the Petition for Revival of an Application for Patent Abandoned Unintentionally Under 37 C.F.R. § 1.137(b), filed November 19, 2007.

This Petition is hereby granted.

The above-identified application became abandoned for failure to timely reply to the non-final Office action, mailed April 9, 2007. The Office action set a three (3) period for reply. Extensions of time under 37 CFR 1.136(a) were available. No reply having been received, the application became abandoned on July 10, 2007. A Notice of Abandonment was mailed October 25, 2007.

The petition satisfies the requirements of 37 CFR 1.137(b) in that petitioner has supplied (1) the reply in the form of an Amendment; (2) the petition fee; and (3) a proper statement of unintentional delay.

The application is being referred to Technology Center Art Unit 3711 for processing of the Amendment/reply filed with the petition in due course.

Telephone inquiries concerning this decision should be directed to the undersigned at (571) 272-3232.

Derek L. Woods
Attorney
Office of Petitions

UNITED STATES PATENT AND TRADEMARK OFFICE

COMMISSIONER FOR PATENTS
UNITED STATES PATENT AND TRADEMARK OFFICE
WASHINGTON, D.C. 20231
www.uspto.gov

Paper No. 4

BUCKLEY, MASCHOFF, TALWALKAR, & ALLISON
5 ELM STREET
NEW CANAAN, CT 06840

COPY MAILED

APR 2 8 2003

OFFICE OF PETITIONS

In re Application of :
Cove :
Application No. 10/321,222 : DECISION ON PETITION
Filed: December 17, 2002 :
Attorney Docket No. P14948 :

This is a decision on the petition filed December 17, 2002, requesting, in effect, that Figures 1a, 1b, 2a, 2b, and 2c filed on February 24, 2003, be entered as part of the original disclosure.

The petition is **dismissed**.

The application was filed on December 17, 2002. On February 24, 2003, the Office of Initial Patent Examination mailed a "Notice of Omitted Item(s)" stating that the application had been accorded a filing date of December 17, 2002, and advising applicants that Figures 1a, 1b, 2a, 2b, and 2c appeared to have been omitted.

In response, the present petition was filed. Petitioner alleges the missing figures were filed with the original application. Petitioner has submitted a postcard receipt which acknowledges receipt of 5 sheets of formal drawings on December 17, 2002.[1]

A review of the file indicates the presence of 5 sheets of drawings. However, the 5 sheets differ dramatically from the sheets filed with the petition. The evidence in the form of a postcard receipt fails to establish that the pages submitted with the petition were submitted on December 17, 2002. A copy of the 5 sheets of drawings filed on December 17, 2002, is attached.

An amendment to the specification deleting references to the missing pages should be filed prior to the first USPTO action in order to avoid further delays in the examination of the application. In the alternative, if petitioner desires for the examiner to consider pages which were not submitted as part of the original disclosure, then petitioner may seek to submit some or all of those pages as an amendment. Any such amendment will, of course, be reviewed by the examiner for new matter. See MPEP 608.02(a).

[1] Evidence of receipt of any correspondence filed in the Patent and Trademark Office can be obtained by submitting a self addressed post card properly itemizing and identifying the paper or papers being filed. Upon receipt of the correspondence, the Patent and Trademark Office will check the listing on the post card against the papers submitted, making sure that all items listed are present and will then stamp the postcard with an Official date stamp and place the post card in the outgoing mail. "A post card receipt which itemizes and properly identifies the papers which are being filed serves as *prima facie* evidence of receipt in the PTO of all items listed thereon by the PTO." M.P.E.P. § 503.

Further correspondence with respect to this matter should be addressed as follows:

By mail: Mail Stop Petition
Commissioner for Patents
P.O. Box 1450
Alexandria, VA 22313-1450

By facsimile: (703) 308-6916
Attn: Office of Petitions

By hand: Office of Petitions
2201 South Clark Place
Crystal Plaza 4, Suite 3C23
Arlington, VA 22202

If a request of reconsideration is not filed within two months, the file will be returned to the Office of Initial Patent Examination for further processing with a filing date of December 17, 2002, using only the application papers filed on that date.

Telephone inquiries should be directed to Petitions Attorney Steven Brantley at (703) 306-5683.

Charles Steven Brantley
Senior Petitions Attorney
Office of Petitions

Attached: Copy of 5 sheets of drawings filed on December 17, 2002

UNITED STATES PATENT AND TRADEMARK OFFICE

COMMISSIONER FOR PATENTS
UNITED STATES PATENT AND TRADEMARK OFFICE
P.O. BOX 1450
ALEXANDRIA, VA 22313-1450
www.uspto.gov

Paper No. 6

Buckley, Maschoff, Talwalker & Allison
5 Elm Street
New Canaan, CT 06840

COPY MAILED

JUL 2 8 2003

OFFICE OF PETITIONS

In re Application of :
Cove :
Application No. 10/321,222 : DECISION GRANTING PETITION
Filed: February 24, 2003 :
Attorney Docket No. P14948 :

This is a decision on the petition filed July 14, 2002, requesting that the five sheets of drawings filed on December 17, 2002, be replaced with the five sheets of drawings filed on February 24, 2003.

The petition is **granted**.

On December 17, 2002, the application was unintentionally filed with a copy of five sheets of drawings meant for another application. The correct set of five sheets of drawings was not filed.

On January 28, 2003, the Office of Initial Patent Examination mailed a Notice stating that Figures 1a, 1b, and 2a-2c were missing, that a filing date had been accorded, and that, unless a petition was filed, the application would be examined as filed.

Upon receiving the Notice, petitioner failed to recognize that the incorrect set of drawings had been submitted. Therefore, petitioner submitted a copy of the correct set of drawings and a copy of a postcard receipt to establish that the missing Figures were filed with the original application papers. The petition was dismissed.

Petitioner now seeks to have the five correct sheets of drawings entered and to have the filing date changed to the date the correct sheets of drawings were filed.

Upon consideration of all the facts, the relief requested will be granted. The copy of the drawings filed on February 24, 2003, will be used for examination purposes.

The declaration filed on December 17, 2002, refers to the application "attached hereto" and does not refer to the missing drawing pages since the pages were not included with the application papers deposited on December 17, 2002. Accordingly, a supplemental oath or declaration by the inventors must be supplied stating clearly that the drawings filed on February 24, 2003, have been reviewed.

The Application is being returned to the Office of Initial Patent Examination for further processing with a filing date of February 24, 2003, using the application papers filed on December 17, 2002, other than the drawings, and using the five sheets of drawings submitted on February 24, 2003.

Telephone inquiries should be directed to Petitions Attorney Steven Brantley at (703) 306-5683.

Charles Steven Brantley
Senior Petitions Attorney
Office of Petitions

UNITED STATES PATENT AND TRADEMARK OFFICE

COMMISSIONER FOR PATENTS
UNITED STATES PATENT AND TRADEMARK OFFICE
P.O. BOX 1450
ALEXANDRIA, VA 22313-1450
www.uspto.gov

Paper No. 5

COPY MAILED

JUN 16 2003

OFFICE OF PETITIONS

ALCATEL USA
INTELLECTUAL PROPERTY DEPARTMENT
3400 W. PLANO PARKWAY, MS LEGL2
PLANO, TX 75075

In re Application of
Pete O'Connell, Abraira, Gary Hanson, Xing Chen and Babu Mani
Application No.10/321,230
Filed: December 17, 2002
Attorney Docket Number: 135974US
Title of Invention: CALL-ROUTING APPARATUS, AND ASSOCIATED METHOD, FOR PROVIDING LOCAL CALL HANDLING FUNCTIONS IN A COMMUNICATION NETWORK

DECISION GRANTING STATUS UNDER 37 CFR 1.47(a)

This is in response to the renewed petition under 37 CFR 1.47(a), filed June 10, 2003 (certificate of mailing June 3, 2003).

The petition is GRANTED.

Petitioner has shown that the non-signing inventor has refused to join in the filing of the above-identified application after having been presented with the application papers. The petition attest a copy of the application was sent to non-signing inventor's last known address. The non-signing inventor's failure to respond to the application mailing and explicit telephonic refusal sufficiently establishes that he refuses to execute the application papers.

The above-identified application and papers have been reviewed and found in compliance with 37 CFR 1.47(a). This application is hereby accorded Rule 1.47(a) status.

As provided in Rule 1.47(c), this Office will forward notice of this application's filing to the non-signing inventor at the address given in the petition. Notice of the filing of this application will also be published in the Official Gazette.

This application is being forwarded to the Office of Initial Patent Examination for further processing.

Telephone inquiries related to this decision may be directed to the undersigned at (703) 306-0251.

Charlema R. Grant

Charlema R. Grant
Petitions Attorney
Office of Petitions

UNITED STATES PATENT AND TRADEMARK OFFICE

COMMISSIONER FOR PATENTS
UNITED STATES PATENT AND TRADEMARK OFFICE
P.O. BOX 1450
ALEXANDRIA, VA 22313-1450
www.uspto.gov

Pete O'Connell
3 Darr Road
Heath, Texas 75087

COPY MAILED

JUN 16 2003

OFFICE OF PETITIONS

In re Application of
Pete O'Connell, Abraira, Gary Hanson, Xing Chen and Babu Mani
Application No.10/321,230 :LETTER
Filed: December 17, 2002
Attorney Docket Number: 135974US
Title of Invention: CALL-ROUTING APPARATUS, AND ASSOCIATED METHOD, FOR PROVIDING LOCAL CALL HANDLING FUNCTIONS IN A COMMUNICATION NETWORK

Dear Mr. O'Connell:

You are named as a joint inventor in the above-identified United States patent application filed under the provisions of 35 U.S.C. § 116 (United States Code) and 37 C.F.R. § 1.47(a), Rules of Practice in Patent Cases. Should a patent be granted on the application you will be designated therein as a joint inventor.

As a named inventor you are entitled to inspect any paper in the file wrapper of the application, order copies of all or any part thereof (at a prepaid cost as per 37 C.F.R. § 1.19) or make your position of record in the application. Alternatively, you may arrange to do any of the preceding through a registered patent attorney or agent presenting written authorization from you. If you care to join the application, counsel of record (see below) would presumably assist you. Joining in the application would entail the filing of an appropriate oath or declaration by you pursuant to 37 C.F.R. § 1.63.

Telephone inquiries regarding this communication should be directed to Petitions Attorney Charlema R. Grant at (703) 306-0251. Requests for information regarding your application should be directed to the File Information Unit at (703) 308-2733. Information regarding how to pay for and order a copy of the application, or a specific paper in the application, should be directed to Certification Division at (703) 308-9726 or 1-800-972-6382 (outside the Washington D.C. area).

Charlema R. Grant
Petitions Attorney
Office of Petitions

Richard W. Mysliwiec
ALCATEL USA
INTELLECTUAL PROPERTY DEPARTMENT
3400 W. PLANO PARKWAY, MS LEGL2
PLANO, TX 75075

UNITED STATES PATENT AND TRADEMARK OFFICE

COMMISSIONER FOR PATENTS
UNITED STATES PATENT AND TRADEMARK OFFICE
WASHINGTON, D.C. 20231
www.uspto.gov

Paper No. 3

COPY MAILED

APR 0 3 2003

OFFICE OF PETITIONS

ALCATEL USA
INTELLECTUAL PROPERTY DEPARTMENT
3400 W. PLANO PARKWAY, MS LEGL2
PLANO TX 75075

In re Application of
O'Connell et al.
Application No.10/321,230
Filed: December 17, 2002
Attorney Docket No. 135974US

DECISION REFUSING STATUS
UNDER 37 CFR 1.47(a)

This is in response to the petition filed December 17, 2002, under 37 C.F.R. §1.47(a).

The petition under 37 C.F.R. §1.47(a) is **DISMISSED**.

Rule 47 applicant is given TWO MONTHS from the mailing date of this decision to reply, correcting the below-noted deficiencies. Any reply should be entitled "Request for Reconsideration of Petition Under 37 C.F.R. §1.47(a)," and should only address the deficiencies noted below, except that the reply may include an oath or declaration executed by the non-signing inventor. **Failure to respond will result in abandonment of the application**. Any extensions of time will be governed by 37 C.F.R. §1.136(a).

The above-identified application was filed on December 17, 2002, without an executed oath or declaration. A petition under 37 CFR 1.47 accompanied the declaration.

A grantable petition under 37 C.F.R. §1.47(a) requires: (1) proof that the non-signing inventor cannot be reached or refuses to sign the oath or declaration after having been presented with the application papers (specification, claims and drawings); (2) an acceptable oath or declaration in compliance with 35 U.S.C. §§115 and 116; (3) the petition fee; and (4) a statement of the last known address of the non-signing inventor.

The instant petition does not satisfy requirements (1) and (2).

As to item (1), Rule 47 applicant has failed to show that the non-signing inventor refused to sign the declaration after having been presented with the application papers. Rule 47 applicant indicates, Pete O'Connell refused to sign the declaration in a telephone conversation. However, rule 47 applicant did not indicate a copy of the application papers (specification, including claims, drawings, and oath or declaration) was presented to the non-signing inventor. All that is indicated is that the declaration was presented. Before a refusal can be alleged, applicant must demonstrate a bona fide attempt was made to present a copy of application papers (specification, including claims, drawings, and oath or declaration) to the non-signing inventor. See MPEP 409.03(d).

As to item (2), the declaration submitted is not in compliance with 37 CFR 1.63 . Rule 47 applicant failed to provide the citizenship and mailing addresses of all of the inventors pursuant to 37 CFR 1.63 (a)(3)and (c)(1). Petitioner failed to provide the address and citizenship of inventor Pete O'Connell.

Thus on renewed petition, rule 47 applicant must establish the **entire** application package (including specification, claims and drawings) was presented to the non-signing inventor and he refused to sign. A declaration that corrects the defect outlined above must also be submitted.

Although rule 47 applicant indicated the petition fee was submitted with the petition, a review of the record does not show the fee was received. Accordingly, deposit account 50-0838 has been charged the $130.00 petition fee.

There is no indication that the person signing the present petition was ever given a power of attorney or authorization of agent to prosecute the above-identified application. If the person signing the present petition desires to receive future correspondence regarding this application, the appropriate power of attorney or authorization of agent and change of correspondence address must be submitted. While a courtesy copy of this decision is being mailed to the person signing the present petition, all future correspondence will be directed to the address currently of record until such time as appropriate instructions are received to the contrary.

Further correspondence with respect to this matter should be addressed as follows:

By mail: Commissioner for Patents
Box DAC
Washington, D.C. 20231

By FAX: (703) 308-6916
Attn: Office of Petitions

By hand: Crystal Plaza Four, Suite 3C23
2201 S. Clark Place
Arlington, VA 22202

Telephone inquiries related to this decision may be directed to the undersigned at (703) 306-0251.

Charlema R. Grant

Charlema R. Grant
Petitions Attorney
Office of Petitions

cc: Robert H. Kelly
5956 Sherry Lane, Suite 1400
Dallas, Texas 75225

UNITED STATES PATENT AND TRADEMARK OFFICE

Commissioner for Patents
United States Patent and Trademark Office
P.O. Box 1450
Alexandria, VA 22313-1450
www.uspto.gov

KLARQUIST SPARKMAN, LLP
121 SW SALMON STREET
SUITE 1600
PORTLAND OR 97204

COPY MAILED

APR 21 2006

OFFICE OF PETITIONS

In re Application of :
John S. Smets et al :
Application No. 10/321,266 : ON PETITION
Filed: December 16, 2002 :
Attorney Docket No. 307-62854 :

This is a decision on the petition, filed April 19, 2006, under 37 CFR 1.313(c)(2) to withdraw the above-identified application from issue after payment of the issue fee.

The petition is **GRANTED.**

The above-identified application is withdrawn from issue for consideration of a submission under 37 CFR 1.114 (request for continued examination). See 37 CFR 1.313(c)(2).

Petitioner is advised that the issue fee paid on March 15, 2006 in the above-identified application cannot be refunded. If, however, the above-identified application is again allowed, petitioner may request that it be applied towards the issue fee required by the new Notice of Allowance.[1]

Telephone inquiries should be directed to the undersigned at (571) 272-3208.

The examiner of Technology Center AU 3652 will consider the request for continued examination under 37 CFR 1.114.

Karen Creasy

Karen Creasy
Petitions Examiner
Office of Petitions

[1] The request to apply the issue fee to the new Notice may be satisfied by completing and returning the new Issue Fee Transmittal Form PTOL-85(b), which includes the following language thereon: "Commissioner for Patents is requested to apply the Issue Fee and Publication Fee (if any) or re-apply any previously paid issue fee to the application identified above." Petitioner is advised that, whether a fee is indicated as being due or not, the Issue Fee Transmittal Form **must** be completed and timely submitted to avoid abandonment. Note the language in bold text on the first page of the Notice of Allowance and Fee(s) Due (PTOL-85).

UNITED STATES PATENT AND TRADEMARK OFFICE

COMMISSIONER FOR PATENTS
UNITED STATES PATENT AND TRADEMARK OFFICE
P.O. BOX 1450
ALEXANDRIA, VA 22313-1450
www.uspto.gov

Paper No. _____

Date : April 21, 2006

TO : Director, Office of Patent Publication

FROM : Office of the Deputy Commissioner
for Patent Examination Policy

SUBJECT : Withdrawal from Issue of

Applicant(s)	:John S. Smets et al
Application No.	:10/321,266
Filed	:December 16, 2002

The above-identified application has been assigned Patent No. 7,040,854 and an issue date of May 9, 2006.

It is hereby directed that this application be withdrawn from issue at the request of the applicant.

Do not refund the issue fee.

The following erratum should be published in the Official Gazette if the above-identified application is published in the OG of May 9, 2006:

> "All reference to Patent No. 7,040,854 to John S. Smets et al of Oregon for PALLET HANDLING APPARATUS AND METHOD appearing in the Official Gazette of May 9, 2006 should be deleted since no patent was granted."

Karen Creasy
Petitions Examiner
Office of Petitions

cc: Paul Harrison, MDW-4B03,(FAX-273-5468)
Deneise Boyd, MDE-3D39 (FAX-273-5124)
Mary Louise McAskill, ST-8C15 (FAX 305-4372)
Niomi Farmer, ST-8C14 (FAX-305-4372)
Mary E. Johnson (Cookie), MDE-7C71 (FAX 273-0038
Duane Davis P/OPC MDE-7D89

UNITED STATES PATENT AND TRADEMARK OFFICE

Commissioner for Patents
United States Patent and Trademark Office
P.O. Box 1450
Alexandria, VA 22313-1450
www.uspto.gov

Randi L. Dulaney
Motorola, Inc.
Law Department
8000 West Sunrise Boulevard
Fort Lauderdale FL 33322

COPY MAILED

AUG 2 8 2007

OFFICE OF PETITIONS

In re Application of :
Eric T. EATON et al. :
Application No. 10/321,267 : ON PETITION
Filed: December 17, 2002 :
Attorney Docket No. CS21156UP :

This is a decision on the petition under 37 CFR 1.137(b), filed July 25, 2007, to revive the above-identified application.

The petition is **GRANTED**.

The above-identified application became abandoned for failure to reply to the non-final Office action mailed January 16, 2007, which set a shortened statutory period for reply of three (3) months. No extensions of time under the provisions of 37 CFR 1.136(a) were obtained. Accordingly, the above-identified application became abandoned on April 17, 2007.

The petition satisfies the conditions for revival pursuant to the provisions of 37 CFR 1.137(b) in that (1) the reply in the form of a response to a non-final Office action; (2) the petition fee of $1500; and (3) the required statement of unintentional delay have been received. Accordingly, the reply to the non-final Office action of January 16, 2007 is accepted as having been unintentionally delayed.

The application file does not indicate a change of address has been filed in this case, although the address given on the petition differs from the address of record. A change of address should be filed in this case in accordance with MPEP 601.03. A courtesy copy of this decision is being mailed to the address noted on the petition. However, until otherwise instructed, all future correspondence regarding this application will be mailed solely to the address of record.

37 CFR 1.137(b)(3) requires a statement that "the entire delay in filing the required reply from the due date for the reply until the filing of a grantable petition pursuant to 37 CFR 1.137(b) was unintentional." Since the statement appearing in the petition varies from the language required by 37 CFR 1.137(b)(3), the statement is being construed as the required statement. Petitioner must notify the Office if this is **not** a correct reading of the statement appearing in the petition.

Telephone inquiries concerning this decision should be directed to Brian Sines at (571) 272-6051 or in his absence, the undersigned at (571) 272-7099.

The application file is being referred to Technology Center AU 2618 for appropriate action on the concurrently filed amendment.

David Bucci
Petitions Examiner
Office of Petitions

cc: Joseph T. Cygan
Motorola, Inc.
Law Department (JTC)
600 North US Highway 45
Libertyville, IL 60048

UNITED STATES PATENT AND TRADEMARK OFFICE

UNITED STATES DEPARTMENT OF COMMERCE
United States Patent and Trademark Office
Address: COMMISSIONER FOR PATENTS
P.O. Box 1450
Alexandria, Virginia 22313-1450
www.uspto.gov

TOWNSEND AND TOWNSEND AND CREW, LLP
TWO EMBARCADERO CENTER
EIGHTH FLOOR
SAN FRANCISCO, CA 94111-3834

Mail Date: 04/21/2010

Applicant	: Margaret M. Weichert	: DECISION ON REQUEST FOR
Patent Number	: 7571140	: RECALCULATION of PATENT
Issue Date	: 08/04/2009	: TERM ADJUSTMENT IN VIEW
Appliction No	: 10/321,275	: OF WYETH AND NOTICE OF INTENT TO
Filed	: 12/16/2002	: ISSUE CERTIFICATE OF CORRECTION
		:

The Request for Recalculation is **GRANTED** to the extent indicated.

The patent term adjustment has been determined to be **1564** days. The USPTO will *sua sponte* issue a certificate of correction reflecting the amount of PTA days determined by the recalculation.

Prior to the issuance of the certificate of correction, the USPTO will afford patentee an opportunity to be heard and request reconsideration. Accordingly, patentee has **one month or thirty (30) days**, whichever is longer, to file a request for reconsideration of this patent term adjustment calculation. See 35 U.S.C. 154(b)(3)(B)(ii) and 37 CFR 1.322(a)(4). No extensions of time will be granted under 37 CFR 1.136.

Patentee should use document code PET.OP if electronically filing a request for reconsideration of this patent term adjustment calculation. The patentee must also include the information required by 37 CFR 1.705(b)(2) and the fee required by 37 CFR 1.18(e). If patentee does not file a timely request for reconsideration of this patent term adjustment calculation including the information required by 37 CFR 1.705(b)(2) and the fee required by 37 CFR 1.18(e), the USPTO will issue a certificate of correction reflecting the PTA determination noted above.

Patentee should be aware that in order to preserve the right to review in the United States District Court for the District of Columbia of the USPTO patent term adjustment determination, patentee must ensure that he or she also take the steps required under 35 U.S.C. 154(b)(4)(A) in a timely manner. Nothing in the request for recalculation should be construed as providing an alternative time frame for commencing a civil action under 35 U.S.C. 154(b)(4)(A).

Any questions concerning this decision should be directed to the Office of Patent Legal Administration at 571-272-7702.

UNITED STATES PATENT AND TRADEMARK OFFICE

Commissioner for Patents
United States Patent and Trademark Office
P.O. Box 1450
Alexandria, VA 22313-1450
www.uspto.gov

2/18/09

Patent No. :7056471
Ser. No. :10/321278
Inventor(s) :HAN ET AL.
Issued : 6/6/06
Title : TERNARY AND QUARTERNARY NANO CYSTALS, PROCESS FOR THEIR PRODUCTION AND USES THEREOF
Docket No. :

Re: Request for Certificate of Correction

Consideration has been given your request for the issuance of a certificate of correction for the above-identified patent under the provisions of Rule(s) 1.322 and/or 1.323.

Assignees' names and addresses (assignment data) printed in a patent, are based *solely* on information supplied in the appropriate space for identifying the assignment data, i.e., item 3 of the Issue Fee Transmittal Form PTOL-85B. Granting of a request under 37 CFR 3.81(b) is required to correct applicant's error providing ***incorrect or erroneous*** assignment data, *before* issuance of a Certificate of Correction, under 37 CFR 1.323 *(see Manual of Patent Examining Procedures (M.P.E.P) Chp.1400, sect. 1481).* This procedure is required *at any time after the issue fee is paid*, including after issuance of the patent.

In view of the foregoing, your request, in this mater, is hereby denied.

A request to correct the Assignee under 37 CFR 3.81(b) should include:

A. **the processing fee set forth in 37 CFR 1.117(h) (currently $130);**
B. a statement that the failure to include the correct assignee name on the PTOL-85B was inadvertent; and
C. a copy of the Notice of Recordation of Assignment Document, reflecting the reel and frame number where the assignment(s) is recorded and/or reflecting proof of *the date* the assignment was submitted for recordation.

In the Request, Applicant(s) may request that the file be forwarded to Certificates of Correction Branch, for issuance of a Certificate of Correction, if the Request is granted.

Any request under 37 CFR 3.81(b) should be directed to the following address or facsimile number:

By mail: Mail Stop PETITIONS
Commissioner for Patents
Post Office Box 1450
Alexandria, VA 22313-1450

By hand: Customer Service Window
Mail Stop Petitions
Randolph Building
401 Dulany Street
Alexandria, VA 22314

By fax: (703) 872-9306
ATTN: Office of Petitions

If a fee (currently $100) was previously submitted for consideration of a Request for Certificate of Correction, under CFR 1.323, to correct assignment data, , no additional fee is required.

A certificate of correction will be issued to correct the remaining errors noted in your request.

Henry Randall
For Cecelia Newman
Decisions & Certificates
of Correction Branch
(703) 308-9390 Ext. 108

CARLOS A. FISHER
STOUT EXA BUYAN & MULLINS
4 VENTURE, SUITE 300
IRVINE, CA 92618

HR

UNITED STATES PATENT AND TRADEMARK OFFICE

Commissioner for Patents
United States Patent and Trademark Office
P.O. Box 1450
Alexandria, VA 22313-1450
www.uspto.gov

DAVID L. FEIGENBAUM
FISH & RICHARDSON PC
225 FRANKLIN STREET
BOSTON, MA 02110-2804

COPY MAILED

APR 0 5 2005

OFFICE OF PETITIONS

In re Application of :
David White et al :
Application No. 10/321,281 : DECISION ON PETITIONS
Filed: December 17, 2002 : UNDER 37 CFR 1.137(b)
Attorney Docket No. 13989-012001 : AND 37 CFR 1.313(c)(2)

This is a decision on the petition under 37 CFR 1.137(b), filed March 28, 2005, to revive the above-identified application. This is also a decision on the concurrently filed petition under 37 CFR 1.313(c)(2) to withdraw the application from issue.

The petition under 37 CFR 1.137(b) is **GRANTED**.

The petition under 37 CFR 1.313(c)(2) is **GRANTED**.

DISCUSSION OF PETITION UNDER 37 CFR 1.137(b)

This application became abandoned by operation of law for failure to timely pay the issue and publication fees on or before March 21, 2005, as required by the Notice of Allowance and Fee(s) Due, mailed December 21, 2004.

The petition contains a statement that "the entire period of delay was unintentional." 37 CFR 1.137(b)(3) requires a statement that "the entire delay in filing the required reply from the due date for the reply until the filing of a grantable petition pursuant to 37 CFR 1.137(b) was unintentional." Since the statement contained in the instant petition varies from the language required by 37 CFR 1.137(b)(3), the statement contained in the instant petition is being construed as the statement required by 37 CFR 1.137(b)(3). Petitioner must notify the Office if this is **not** a correct interpretation of the statement contained in the instant petition.

The petition satisfies the conditions for revival pursuant to the provisions of 37 CFR 1.137(b) in that (1) the reply in the form

of payment of the publication and issue fees; (2) the petition fee; and (3) an adequate statement of unintentional delay have been received. Accordingly, the reply to the Notice of December 21, 2004 is accepted as having been unintentionally delayed.

DISCUSSION OF PETITION UNDER 37 CFR 1.313(c)(2)

Petitioner additionally requests that the application be withdrawn from issue for consideration of an Information Disclosure Statement in a request for continued examination (RCE).

The above-identified application is withdrawn from issue for consideration of a submission under 37 CFR 1.114 (request for continued examination). See 37 CFR 1.313(c)(2).

Petitioner is advised that the issue fee paid on March 28, 2005 in the above-identified application cannot be refunded. If, however, the above-identified application is again allowed, petitioner may request that it be applied towards the issue fee required by the new Notice of Allowance.[1]

Telephone inquiries concerning this decision should be directed to the undersigned at (571) 272-3218.

This matter is being referred to Technology Center AU 2812 for processing the RCE and for consideration of the Information Disclosure Statement.

Frances Hicks
Petitions Examiner
Office of Petitions
Office of the Deputy Commissioner
for Patent Examination Policy

---

[1] *The request to apply the issue fee to the new Notice may be satisfied by completing and returning the new Issue Fee Transmittal Form PTOL-85(b), which includes the following language thereon: "Commissioner for Patents is requested to apply the Issue Fee and Publication Fee (if any) or re-apply any previously paid issue fee to the application identified above." Petitioner is advised that, whether a fee is indicated as being due or not, the Issue Fee Transmittal Form* ***must*** *be completed and timely submitted to avoid abandonment. Note the language in bold text on the first page of the Notice of Allowance and Fee(s) Due (PTOL-85).*

UNITED STATES PATENT AND TRADEMARK OFFICE

COMMISSIONER FOR PATENTS
UNITED STATES PATENT AND TRADEMARK OFFICE
P.O. BOX 1450
ALEXANDRIA, VA 22313-1450
www.uspto.gov

BINGHAM MCCUTCHEN LLP
THREE EMBARCADERO CENTER
SAN FRANCISCO, CA 84111

COPY MAILED

JUN 0 8 2006

OFFICE OF PETITIONS

In re Application of :
David White, et al. :
Application No. 10/321,281 :
Filed: December 17, 2002 :
Attorney Docket No.: 13989-012001 :

ON PETITION

This is a decision on the petition, filed June 2, 2006, under 37 CFR 1.313(c)(2) to withdraw the above-identified application from issue after payment of the issue fee.

The petition is **GRANTED**.

The above-identified application is withdrawn from issue for consideration of a submission under 37 CFR 1.114 (request for continued examination). See 37 CFR 1.313(c)(2).

Petitioner is advised that the issue fee paid on December 2, 2005, in the above-identified application cannot be refunded. If, however, the above-identified application is again allowed, petitioner may request that it be applied towards the issue fee required by the new Notice of Allowance. [1]

Telephone inquiries relating to this decision should be directed to the undersigned at (571) 272-3204.

The application is being referred to Technology Center AU 2825 for further processing of the request for continued examination under 37 CFR 1.114.

Sherry D. Brinkley
Petitions Examiner
Office of Petitions

[1]The request to apply the issue fee to the new Notice may be satisfied by completing and returning the new Issue Fee Transmittal Form PTOL-85(b), which includes the following language thereon: "Commissioner for Patents is requested to apply the Issue Fee and Publication Fee (if any) or re-apply any previously paid issue fee to the application identified above." Petitioner is advised that, whether a fee is indicated as being due or not, the Issue Fee Transmittal Form **must** be completed and timely submitted to avoid abandonment. Note the language in bold text on the first page of the Notice of Allowance and Fee(s) Due (PTOL-85).

UNITED STATES PATENT AND TRADEMARK OFFICE

Commissioner for Patents
United States Patent and Trademark Office
P.O. Box 1450
Alexandria, VA 22313-1450
www.uspto.gov

Date : June 8, 2006

TO : Director, Office of Patent Publication

FROM : Office of the Deputy Commissioner
for Patent Examination Policy

SUBJECT : Withdrawal from Issue of

Applicant(s) : David White, et al.
Application No. : 10/321,281
Filed : December 17, 2002

The above-identified application has been assigned Patent No. 7,062,730 and an issue date of June 13, 2006.

It is hereby directed that this application be withdrawn from issue at the request of the applicant.

Do not refund the issue fee.

The following erratum should be published in the Official Gazette if the above-identified application is published in the OG of June 13, 2006:

> "All reference to Patent No. 7,062,730 to DAVID WHITE, ET AL. of MASSACHUSETTS for TEST MASKS FOR LITHOGRAPHIC AND ETCH PROCESSES appearing in the Official Gazette of June 13, 2006, should be deleted since no patent was granted."

Sherry D. Brinkley
Petitions Examiner
Office of Petitions

cc: Paul Harrison, Crystal Park 3-441 (FAX-306-2737)
Deneise Boyd, Crystal Park 2, Suite 1100 (FAX-308-5413)
Mary Louise McAskill, Crystal Park 3-910 (FAX 305-4372)
Niomi Farmer, Crystal Park 3-910 (FAX-305-4372)
Mary E. Johnson (Cookie), P/OCS, CM1-6D07
Duane K.Davis, P/OCS, CM1-6A07
Tamara K. Greene, PK3-910

UNITED STATES PATENT AND TRADEMARK OFFICE

Commissioner for Patents
United States Patent and Trademark Office
P.O. Box 1450
Alexandria, VA 22313-1450
www.uspto.gov

BINGHAM MCCUTCHEN LLP
THREE EMBARCADERO CENTER
SAN FRANCISCO CA 94111

COPY MAILED

MAR 30 2007

OFFICE OF PETITIONS

In re Application of :
David White et al :
Application No. 10/321,290 : ON PETITION
Filed: December 17, 2002 :
Attorney Docket No. 13989-014001 :

This is a decision on the petition, filed March 29, 2007, under 37 CFR 1.313(c)(2) to withdraw the above-identified application from issue after payment of the issue fee.

The petition is **GRANTED**.

The above-identified application is withdrawn from issue for consideration of a submission under 37 CFR 1.114 (request for continued examination). See 37 CFR 1.313(c)(2).

Petitioner is advised that the issue fee paid on January 30, 2007 in the above-identified application cannot be refunded. If, however, the above-identified application is again allowed, petitioner may request that it be applied towards the issue fee required by the new Notice of Allowance.[1]

Telephone inquiries should be directed to the undersigned at (571) 272-3208.

The examiner of Technology Center AU 2825 will consider the request for continued examination under 37 CFR 1.114.

Karen Creasy

Karen Creasy
Petitions Examiner
Office of Petitions

[1] The request to apply the issue fee to the new Notice may be satisfied by completing and returning the new Issue Fee Transmittal Form PTOL-85(b), which includes the following language thereon: "Commissioner for Patents is requested to apply the Issue Fee and Publication Fee (if any) or re-apply any previously paid issue fee to the application identified above." Petitioner is advised that, whether a fee is indicated as being due or not, the Issue Fee Transmittal Form **must** be completed and timely submitted to avoid abandonment. Note the language in bold text on the first page of the Notice of Allowance and Fee(s) Due (PTOL-85).

UNITED STATES PATENT AND TRADEMARK OFFICE

COMMISSIONER FOR PATENTS
UNITED STATES PATENT AND TRADEMARK OFFICE
P.O. BOX 1450
ALEXANDRIA, VA 22313-1450
www.uspto.gov

JOHN F. HAYDEN
FISH & RICHARDSON P.C.
SUITE 1100
1425 K STREET, N.W.
WASHINGTON DC 20005

COPY MAILED

MAY 11 2005

OFFICE OF PETITIONS

Applicant: Kettler
Appl. No.: 10/321,291
Filing Date: December 17, 2002
Title: ONLINE LIST GENERATION PROCESS AND METHOD
Attorney Docket No.: 101012-032001 / 50-02-017
Pub. No.: US 2004/0117276 A1
Pub. Date: June 17, 2004

This is in response to the request for a corrected patent application publication under 37 CFR 1.221(b), which was received on July 30, 2004.

The request is DISMISSED.

The instant request is that the patent application publication be republished because the publication contains errors on page 2, line 28, wherein "cross-selling" is misprinted as "cross selling"; page 6, line 11, wherein "process 60" is misprinted as "process 0.60" and page 7, line 17, wherein the "," after "process" needs to be deleted.

37 CFR 1.221(b) is applicable "only when the Office makes a material mistake which is apparent from Office records . . . Any request for a corrected publication or revised patent application publication other than provided as provided in paragraph (a) of this section must be filed within two months from the date of the patent application publication. This period is not extendable." A material mistake must affect the public's ability to appreciate the technical disclosure of the patent application publication, to determine the scope of the patent application publication, or to determine the scope of the provisional rights that an applicant may seek to enforce upon issuance of a patent.[1]

The errors mentioned by Applicant are Office errors, but they are not material Office mistakes under 37 CFR 1.221(b). With respect to misprinting of "product substitution process 60", the numeral is an identifier for the drawings and it is clear that it is "60" not "0.60." The mistakes are minor typographical errors, which do not affect the public's ability to appreciate the technical disclosure of the patent application publication, or determine the scope of the patent application publication or determine the scope of the provisional rights that an applicant may seek to enforce

[1] Changes to Implement Eighteen-Month Publication of Patent Applications, 65 FR 57023, 57038 (Sept. 20, 2000), 1239 Off. Gaz. Pat. Office Notices 63, 75 (Oct. 10, 2000) (final rule).

upon issuance of a patent.

Some of the errors may have been caused by the poor quality of the text. Applicants have been advised to file applications having cleaner text with sufficient clarity and contrast to permit reproduction, such as electronic reproduction by digital imaging and optical character recognition, which will avoid errors in the patent application publication process. See 37 CFR 1.52.

The applicant is advised that a "request for republication of an application previously published" may be filed under 37 CFR 1.221(a). Such a request for republication "must include a copy of the application in compliance with the Office's electronic filing system requirements and be accompanied by the publication fee set forth in § 1.18(d) and the processing fee set forth in § 1.17(i)." If the request for republication does not comply with the electronic filing system requirements, the republication will not take place and the publication fee set forth in § 1.18(d) will be refunded. The processing fee will be retained.

Any request for republication under 37 CFR 1.221(a), must be submitted via the EFS system and questions should be addressed as follows:

By mail to: Mail Stop PGPUB
Commissioner for Patents
P.O. Box 1450
Alexandria, VA 22313-1450

By facsimile: 703-872-9306

Inquires concerning this communication should be directed to Mark Polutta at (571) 272-7709.

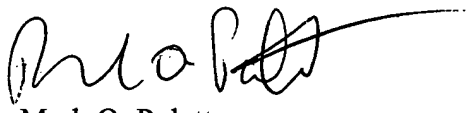

Mark O. Polutta
Office of Patent Legal Administration
Office of the Deputy Commissioner
for Patent Examination Policy

UNITED STATES PATENT AND TRADEMARK OFFICE

Commissioner for Patents
United States Patent and Trademark Office
P.O. Box 1450
Alexandria, VA 22313-1450
www.uspto.gov

COPY MAILED

APR 2 8 2006

OFFICE OF PETITIONS

FISH & RICHARDSON
P.O. BOX 1022
MINNEAPOLIS MN 55440-1022

In re Application of :
David White et al :
Application No. 10/321,298 : ON PETITION
Filed: December 17, 2002 :
Attorney Docket No. 13989-011001 :

This is a decision on the petition, filed April 27, 2006, under 37 CFR 1.313(c)(2) to withdraw the above-identified application from issue after payment of the issue fee.

The petition is **GRANTED**.

The above-identified application is withdrawn from issue for consideration of a submission under 37 CFR 1.114 (request for continued examination). See 37 CFR 1.313(c)(2).

Petitioner is advised that the issue fee paid on January 30, 2006, in the above-identified application cannot be refunded. If, however, the above-identified application is again allowed, petitioner may request that it be applied towards the issue fee required by the new Notice of Allowance.[1]

Further, the power of attorney submitted with the petition on April 27, 2006, is not in compliance with 37 CFR 3.73(b).

Telephone inquiries should be directed to the undersigned at (571) 272-3208.

---

[1] The request to apply the issue fee to the new Notice may be satisfied by completing and returning the new Issue Fee Transmittal Form PTOL-85(b), which includes the following language thereon: "Commissioner for Patents is requested to apply the Issue Fee and Publication Fee (if any) or re-apply any previously paid issue fee to the application identified above." Petitioner is advised that, whether a fee is indicated as being due or not, the Issue Fee Transmittal Form **must** be completed and timely submitted to avoid abandonment. Note the language in bold text on the first page of the Notice of Allowance and Fee(s) Due (PTOL-85).

The examiner of Technology Center AU 2825 will consider the request for continued examination under 37 CFR 1.114.

Karen Creasy

Karen Creasy
Petitions Examiner
Office of Petitions

cc:
BINGHAM MCCUTCHEN
THREE EMBARCADERO CENTER
SAN FRANCISCO, CA 94111

UNITED STATES PATENT AND TRADEMARK OFFICE

COMMISSIONER FOR PATENTS
UNITED STATES PATENT AND TRADEMARK OFFICE
P.O. BOX 1450
ALEXANDRIA, VA 22313-1450
www.uspto.gov

Paper No. _____

Date : April 28, 2006

TO : Director, Office of Patent Publication

FROM : Office of the Deputy Commissioner
for Patent Examination Policy

COPY MAILED
APR 28 2006
OFFICE OF PETITIONS

SUBJECT : Withdrawal from Issue of

Applicant(s) :David White et al
Application No. :10/321,298
Filed :December 17, 2002

The above-identified application has been assigned Patent No. 7,039,895 and an issue date of May 2, 2006.

It is hereby directed that this application be withdrawn from issue at the request of the applicant.

Do not refund the issue fee.

The following erratum should be published in the Official Gazette if the above-identified application is published in the OG of May 2, 2006:

> "All reference to Patent No. 7,039,895 to David White et al of Massachusetts for ADJUSTMENT OF MASKS FOR INTEGRATED CIRCUIT FABRICATION appearing in the Official Gazette of May 2, 2006 should be deleted since no patent was granted."

Karen Creasy

Karen Creasy
Petitions Examiner
Office of Petitions
Office of the Deputy Commissioner
for Patent Examination Policy

cc: Paul Harrison, MDW-4B03,(FAX-273-5468)
Deneise Boyd, MDE-3D39 (FAX-273-5124)
Mary Louise McAskill, ST-8C15 (FAX 305-4372)
Niomi Farmer, ST-8C14 (FAX-305-4372)
Mary E. Johnson (Cookie), MDE-7C71 (FAX 273-0038
Duane Davis P/OPC MDE-7D89

UNITED STATES PATENT AND TRADEMARK OFFICE

Commissioner for Patents
United States Patent and Trademark Office
P.O. Box 1450
Alexandria, VA 22313-1450
www.uspto.gov

CADENCE DESIGN SYSTEMS, INC.
C/O BINGHAM McCUTCHEN LLP
THREE EMBARCADERO CENTER
SAN FRANCISCO, CA 94111-4067

COPY MAILED

APR 05 2007

OFFICE OF PETITIONS

In re Application of :
David White et al :
Application No. 10/321,298 : DECISION GRANTING PETITION
Filed: December 17, 2002 : UNDER 37 CFR 1.313(c)(2)
Attorney Docket No. 13989-011001 :

This is a decision on the petition, filed April 3, 2007, under 37 CFR 1.313(c)(2) to withdraw the above-identified application from issue after payment of the issue fee.

The petition is **GRANTED**.

The above-identified application is withdrawn from issue for consideration of a submission under 37 CFR 1.114 (request for continued examination). See 37 CFR 1.313(c)(2).

Petitioner is advised that the issue fee paid on January 22, 2007 in the above-identified application cannot be refunded. If, however, the above-identified application is again allowed, petitioner may request that it be applied towards the issue fee required by the new Notice of Allowance.[1]

Telephone inquiries should be directed to the undersigned at (571) 272-3218.

This matter is being referred to Technology Center AU 2825 for processing of the request for continued examination under 37 CFR 1.114 and for consideration of the concurrently filed amendment.

Frances Hicks
Petitions Examiner
Office of Petitions

C:\Documents and Settings\FHicks\My Documents\470\Apr10\321298.wpd

[1] *The request to apply the issue fee to the new Notice may be satisfied by completing and returning the new Part B – Fee(s) Transmittal Form (along with any balance due at the time of submission). Petitioner is advised that the Issue Fee Transmittal Form must be completed and timely submitted to avoid abandonment.*

SPE RESPONSE FOR CERTIFICATE OF CORRECTION

Paper No.: _____

DATE : 5-17-06

TO SPE OF : ART UNIT 2600

SUBJECT : Request for Certificate of Correction for Appl. No.: 10321331 Patent No.: 6 970 694

Please respond to this request for a certificate of correction within 7 days.

Please review the requested changes/corrections as shown in the **COCIN** document(s) in the IFW application image. No new matter should be introduced, nor should the scope or meaning of the claims be changed.

Please complete the response (see below) and forward the completed response to scanning using document code **COCX**.

Valerie Jackson

Certificates of Correction Branch

703-308-9390 ext. 714

Thank You For Your Assistance

The request for issuing the above-identified correction(s) is hereby:

Note your decision on the appropriate box.

- ☑ **Approved** — All changes apply.
- ☐ **Approved in Part** — Specify below which changes **do not** apply.
- ☐ **Denied** — State the reasons for denial below.

Comments: The corrections do not introduce new matters.

Sumati Lefkowitz

SUMATI LEFKOWITZ
SUPERVISORY PATENT EXAMINER
SPE

2629
Art Unit

UNITED STATES
PATENT AND
TRADEMARK OFFICE

Commissioner for Patents
Washington, DC 20231
www.uspto.gov

6/30/03

Alston and Bird LLP
Bank of America Plaza
101 South Tryon Street Suite 4000
Charlotte NC 28280-4000

Dear Applicant:

The Box PGPub replacement drawings for application number 10/321,348 received on 5/19/03 by the U. S. Patent and Trademark Office will be included for patent publication.

Telephone inquiries should be directed to Customer Service, Office of Initial Patent Examination, at 703-308-1202.

UNITED STATES
PATENT AND
TRADEMARK OFFICE

Commissioner for Patents
Washington, DC 20231
www.uspto.gov

Signature of Reviewer, Office of Initial Patent Examination

UNITED STATES PATENT AND TRADEMARK OFFICE

Commissioner for Patents
United States Patent and Trademark Office
P.O. Box 1450
Alexandria, VA 22313-1450
www.uspto.gov

ANTONELLI, TERRY, STOUT & KRAUS, LLP
1300 NORTH SEVENTEENTH STREET
SUITE 1800
ARLINGTON VA 22209-3873

COPY MAILED

JUN 19 2009

OFFICE OF PETITIONS

In re Application of

Tomobe, et al.

Application No. 10/321,351

Filed: December 18, 2002

Attorney Docket No. 501.42231X00

: DECISION ON PETITION

This is a decision on the petition under 37 CFR 1.137(b), filed May 19, 2009, to revive the above-identified application.

The petition is **GRANTED**.

The above-identified application became abandoned for failure to file a timely response to the final Office action mailed October 10, 2008. The final Office action set a shortened statutory period fro reply of three months from its mailing date. No response was received within the allowable period and the application became abandoned on January 11, 2009. A Notice of Abandonment was mailed on May 19, 2009.

The continuing application accorded application serial number 12/422,015 filed April 10, 2009, is noted. With continuity having been established, the subject application is again abandoned in favor of the continuing application.

Telephone inquiries concerning this decision should be directed to the undersigned at (571) 272-3222.

Kenya A. McLaughlin
Petitions Attorney
Office of Petitions

UNITED STATES PATENT AND TRADEMARK OFFICE

Commissioner for Patents
United States Patent and Trademark Office
P. O. Box 1450
Alexandria, VA 22313-1450
www. uspto. gov

BIRCH STEWART KOLASCH & BIRCH
PO BOX 747
FALLS CHURCH, VA 22040-0747

COPY MAILED

MAR 2 0 2008

OFFICE OF PETITIONS

In re Application of :
Byung-Jin Kim et al :
Application No. 10/321,362 : ON PETITION
Filed: December 18, 2002 :
Attorney Docket No. 2950-0236P

This is a decision on the petition, filed March 18, 2008 under 37 CFR 1.313(c)(2) to withdraw the above-identified application from issue after payment of the issue fee.

The petition is **GRANTED**.

The above-identified application is withdrawn from issue for consideration of a submission under 37 CFR 1.114 (request for continued examination). See 37 CFR 1.313(c)(2).

Petitioner is advised that the issue fee paid on February 19, 2008 in the above-identified application cannot be refunded. If, however, the above-identified application is again allowed, petitioner may request that it be applied towards the issue fee required by the new Notice of Allowance.[1]

Telephone inquiries should be directed to Irvin Dingle at (571) 272-3210.

This matter is being referred to Technology Center AU 2621 for processing of the request for continued examination under 37 CFR 1.114 and for consideration of the concurrently filed Information Disclosure Statement.

Irvin Dingle
Petitions Examiner
Office of Petitions

[1] The request to apply the issue fee to the new Notice may be satisfied by completing and returning the new Issue Fee Transmittal Form PTOL-85(b), which includes the following language thereon: Commissioner for Patents is requested to apply the Issue Fee and Publication Fee (if any) or re-apply any previously paid issue fee to the application identified above. Petitioner is advised that, whether a fee is indicated as being due or not, the Issue Fee Transmittal Form must be completed and timely submitted to avoid abandonment. Note the language in bold text on the first page of the Notice of Allowance and Fee(s) Due (PTOL-85).

UNITED STATES PATENT AND TRADEMARK OFFICE

COMMISSIONER FOR PATENTS
UNITED STATES PATENT AND TRADEMARK OFFICE
WASHINGTON, D.C. 20231
www.uspto.gov

Paper No. 4

BIRCH STEWART KOLASCH & BIRCH
PO BOX 747
FALLS CHURCH, VA 22040-0747

COPY MAILED

APR 01 2003

OFFICE OF PETITIONS

In re Application of :
Im :
Application No. 10/321,369 : DECISION GRANTING
Filed: December 18, 2002 : PETITION
Attorney Docket No. 0465-0984P :

This is a decision on the petition filed February 13, 2003, to establish that page 7 of the specification was part of the originally filed application.

On December 18, 2002, the application was filed.

On February 6, 2003, the Office of Initial Patent Examination mailed a "Notice of Omitted Item(s)" stating that the application had been accorded a filing date of December 18, 2002, and advising applicants that page 7 of the specification appeared to have been omitted.

In response, the present petition was filed alleging that page 7 was deposited on December 18, 2002. In support, petitioner has submitted a postcard receipt which acknowledges receipt of 37 pages of specification on December 18, 2002.[1] The file wrapper only contains 36 pages of specification. Therefore, the evidence is convincing that the application papers deposited on December 18, 2002, included page 7 of the specification and that page 7 was subsequently misplaced in the PTO.

In view of the above, the petition is **granted**. The copy of page 7 submitted with the petition will be used for examination purposes.

The petition fee of $130 will be credited to petitioner's deposit account.

The Notice mailed February 6, 2003, was sent in error and is hereby vacated.

The Application is being returned to the Office of Initial Patent Examination for further processing with a filing date of December 18, 2002, using the application papers filed on December 18, 2002, and the copy of page 7 of the specification filed on February 13, 2003.

[1] Evidence of receipt of any correspondence filed in the Patent and Trademark Office can be obtained by submitting a self addressed post card properly itemizing and identifying the paper or papers being filed. Upon receipt of the correspondence, the Patent and Trademark Office will check the listing on the post card against the papers submitted, making sure that all items listed are present and will then stamp the postcard with an Official date stamp and place the post card in the outgoing mail. "A post card receipt which itemizes and properly identifies the papers which are being filed serves as *prima facie* evidence of receipt in the PTO of all items listed thereon by the PTO." M.P.E.P. § 503.

Telephone inquiries should be directed to Petitions Attorney Steven Brantley at (703) 306-5683.

Charles Steven Brantley
Petitions Attorney
Office of Petitions

UNITED STATES PATENT AND TRADEMARK OFFICE

Commissioner for Patents
United States Patent and Trademark Office
P.O. Box 1450
Alexandria, VA 22313-1450
www.uspto.gov

COPY MAILED

MAR 0 1 2007

OFFICE OF PETITIONS

BIRCH STEWART KOLASCH & BIRCH
PO BOX 747
FALLS CHURCH, VA 22040-0747

In re Patent No. 6,824,162 :
Issued: November 30, 2004 :
Application No.: 10/321,376 : ON PETITION
Filed: December 18, 2002 :
Attorney Docket No: **3313-0857P** :

This is a regarding the petition under 37 CFR 1.28(c) filed September 29, 2006.

The petition is **GRANTED.**

By the instant petition, petitioner informs the USPTO that the inventive entity is not eligible for small status. The loss of small entity status is acknowledged and noted in the application file.

Payment of the deficiencies in various fees previously remitted to the USPTO are of record as of September 29, 2006.

The address as cited on the petition differs from the address of record. Although a courtesy copy of this decision is being mailed to the address cited on the petition, all future correspondence will be mailed solely to the address of record until appropriate written instructions to the contrary are received.

The application file will be directed to the Files Repository.

Telephone inquiries regarding this decision should be directed to the undersigned at (571) 272-3222.

Kenya A. McLaughlin
Petitions Attorney
Office of Petitions

cc:
RABIN AND BERDO PC
1101 14TH ST NW STE 500
WASHINGTON, DC 20005

UNITED STATES PATENT AND TRADEMARK OFFICE

3-14-08

Commissioner for Patents
United States Patent and Trademark Office
P.O. Box 1450
Alexandria, VA 22313-1450
www.uspto.gov

Patent No. : 7,254,543
Ser. No. : 10/321,406
Inventor(s) : Toshio Ibaraki, et. al.
Issued : August 7, 2007
Title : TELEVISION APPARATUS HAVING SPEECH RECOGNITION FUNCTION, AND METHOD OF CONTROLLING THE SAME
Docket No. : 3688ME-39

Re: Request for Certificate of Correction

Consideration has been given your request for the issuance of a certificate of correction for the above-identified patent under the provisions of Rule(s) 1.322 or 1.323.

Assignees' names and addresses (assignment data) printed in a patent, are based *solely* on information supplied in the appropriate space for identifying the assignment data, i.e., item 3 of the Issue Fee Transmittal Form PTOL-85B. Granting of a request under 37 CFR 3.81(b) is required to correct applicant's error providing ***incorrect or erroneous*** assignment data, *before* issuance of a Certificate of Correction, under 37 CFR 1.323 *(see Manual of Patent Examining Procedures (M.P.E.P) Chp.1400, sect. 1481).* This procedure is required *at any time after the issue fee is paid*, including after issuance of the patent.

In view of the foregoing, your request is hereby denied.

A request to correct the Assignee under 37 CFR 3.81(b) should include:

A. **the processing fee set forth in 37 CFR 1.117(h) (currently $130);**
B. a statement that the failure to include the correct assignee name on the PTOL-85B was inadvertent; and
C. a copy of the Notice of Recordation of Assignment Document, reflecting the reel and frame number where the assignment(s) is recorded and/or reflecting proof of *the date* the assignment was submitted for recordation.

In the Request, Applicant(s) may request that the file be forwarded to Certificates of Correction Branch, for issuance of a Certificate of Correction, if the Request is granted.

Any request under 37 CFR 3.81(b) should be directed to the following address or facsimile number:

By mail:
Mail Stop PETITIONS
Commissioner for Patents
Post Office Box 1450
Alexandria, VA 22313-1450

By hand: Customer Service Window
Mail Stop Petitions
Randolph Building
401 Dulany Street
Alexandria, VA 22314

By fax: (703) 571-273-8300
ATTN: Office of Petitions

If a fee (currently $100) was previously submitted for consideration of a Request for Certificate of Correction, under CFR 1.323, to correct assignment data, , no additional fee is required.

Eva James
For Mary Diggs
Decisions & Certificates
of Correction Branch
(703) **308-9390 ext. 124** or 125

Sheridan Ross PC
1560 Broadway
Suite 1200
Denver CO 80202

ej

UNITED STATES PATENT AND TRADEMARK OFFICE

COMMISSIONER FOR PATENTS
UNITED STATES PATENT AND TRADEMARK OFFICE
P.O. BOX 1450
ALEXANDRIA, VA 22313-1450
www.uspto.gov

SHERIDAN ROSS PC
1560 BROADWAY
SUITE 1200
DENVER CO 80202

COPY MAILED

AUG 04 2008

OFFICE OF PETITIONS

In re Patent No. 7,254,543 :
Issue Date: August 7, 2007 :
Application No. 10/321,406 : ON PETITION
Filed: December 16, 2002 :
Attorney Docket No. 3688ME-39 :

This is a decision on the petition filed May 7, 2008, which is being treated as a request under 37 CFR 3.81(b)[1] to correct the name of the assignee on the front page of the above-identified patent by way of a Certificate of Correction.

The request is **GRANTED**.

Telephone inquiries concerning this decision may be directed to the undersigned at (571) 272-3205. Inquiries regarding the issuance of a certificate of correction should be directed to the Certificate of Correction Branch at (571) 272-4200.

The Certificates of Correction Branch will be notified of this decision granting the petition under 37 CFR 3.81(b) and directing issuance of the requested Certificate of Correction.

Alesia M. Brown
Petitions Attorney
Office of Petitions

[1] *See* MPEP 1309, subsection II; and Official Gazette of June 22, 2004.

UNITED STATES PATENT AND TRADEMARK OFFICE

Commissioner for Patents
United States Patent and Trademark Office
P.O. Box 1450
Alexandria, VA 22313-1450
www.uspto.gov

TOWNSEND AND TOWNSEND AND CREW, LLP
TWO EMBARCADERO CENTER
EIGHTH FLOOR
SAN FRANCISCO CA 94111-3834

COPY MAILED

SEP 17 2007

OFFICE OF PETITIONS

In re Patent: 6,945,938 :
Issue Date: September 20, 2005 :
Application Number: 10/321,407 : DECISION ON PETITION
Filed: December 16, 2002 :
Attorney Dkt. No. 012553-008030US :

This is a decision on the petition filed November 14, 2005 to correct the assignee under 37 CFR 3.81 (b)[1] to correct the assignee on the front page of the above-identified patent by way of a Certificate of Correction.

The petition is **Dismissed**.

Any request for reconsideration must be submitted within TWO (2) MONTHS from the mail date of this decision. Extensions of time under 37 C.F.R. § 1.136(a) are not permitted. The reconsideration request should include a cover letter entitled "Renewed Petition". This is **not** a final agency action within the meaning of 5 U.S.C. § 704.

Any request for issuance of an application in the name of the assignee submitted after the date of the payment of the issue fee, and any request that a patent be corrected to state the name of assignee must :

(A) state the assignment was submitted for recordation as set forth in 37 CFR §3.11 before issuance of the patent;

[1]See 69 Fed. Reg. 29865 (May 26, 2004).

(B) provide a request for a certificate of correction §1.323;

(C) provide the fee set forth in 37 CFR §1.20 (a) and

(D) provide the processing fee set forth in 37 CFR §1.17(i)

Petitioner has failed to provide (A). Petitioner states two assignees were recorded for the above-identified patent. The two assignees are Boston Scientific Scimed, Inc. and Boston Scientific Limited. A review of the record shows that the patent issued with Boston Scientific Limited listed as Assignee. Boston Scientific Scimed, Inc was not listed on the issued patent. Review of assignment records shows that prior to the issuance of the patent both Boston Scientific Limited and Scimed Life Systems, Inc were recorded as the assignees on Reel 09495 frame 0640. Further review of the assignment records shows that the merger document which changed the name of Scimed Life Systems to Boston Scientific Scimed was not recorded until after the issuance of the patent on November 9, 2005. Assignment information printed on a patent is not updated after a patent is issued, and may not be reflective of the assignment recorded in the Office subsequent to the issuance of the patent. Accordingly, a certificate of correction reflecting assignee Boston Scientific Scimed , Inc. is not in order.

However petitioner may have a certificate of correction which reflects the assignment recorded October 2, 1998 that includes Scimed Life Systems, Inc and Boston Scientific Limited. A new certificate of correction reflecting reel 0945 frame 0640 must be submitted.

Petitioner has submitted a $400.00 petition fee. Pursuant to petitioner's request deposit account 20-1430 is being refunded $270.00. The certificate of correction pursuant 37 CFR 1.20 (a) fee is $100.00 and the processing fee pursuant to 37 CFR 1.17(i) is $130.00. A petition fee is no longer required.

Further correspondence with respect to this matter may be addressed as follows:

By mail:

Mail Stop Petition
Commissioner for Patents
P.O. Box 1450
Alexandria, VA 22313-1450

By facsimile: (571) 273-8300

By delivery service:
FedEx, UPS, DHL, etc.)

U.S. Patent and Trademark Office
Customer Service Window,
Randolph Building
401 Dulany Street
Alexandria, VA 22314

Telephone inquiries concerning this matter should be directed to the undersigned at (571) 272-3215.

Charlema R. Grant
Petitions Attorney
Office of Petitions

UNITED STATES PATENT AND TRADEMARK OFFICE

Commissioner for Patents
United States Patent and Trademark Office
P.O. Box 1450
Alexandria, VA 22313-1450
www.uspto.gov

CASCADIA INTELLECTUAL PROPERTY
500 UNION STREET
SUITE 1005
SEATTLE WA 98101

COPY MAILED

AUG 0 5 2008

OFFICE OF PETITIONS

In re Application of	:	
Paula S. Newman	:	
Application No. 10/321416	:	DECISION
Filing or 371(c) Date: 12/16/2002	:	ON PETITION
Patent No.: 7340674	:	
Issue Date: 03/04/2008	:	
Attorney Docket Number: D/ A2560	:	

This is a decision on the "Petition Under 37 CFR § 1.181 to Correct Assignee Name Issued Patent", filed April 15, 2008, requesting a change in the name of the assignee after payment of the issue fee. The Petition is properly treated as a petition under 37 CFR 3.81(b)[1].

The Petition is **granted**.

The petition was accompanied by a certificate of correction as required by 3.81(b), and the fee submitted with the present petition. Further, Office assignment records reflect that Palo Alto Research Center Incorporated, is the assignees of record. As the request complies with the provisions of 37 CFR 3.81(b), it would be appropriate for a certificate of correction to be processed.

Telephone inquiries concerning this matter should be directed to the undersigned at (571) 272-3232. Any questions concerning the issuance of the Certificate of Correction should be directed to the Certificate of Correction Branch at (571) 272-4200.

This matter is being referred to the Certificates of Correction Branch for processing of a certificate of correction after issuance of this application into a patent.

/Derek L. Woods/
Derek L. Woods
Attorney
Office of Petitions

[1] *See* MPEP 1309, subsection II; and Official Gazette of June 22, 2004.

UNITED STATES PATENT AND TRADEMARK OFFICE

Commissioner for Patents
United States Patent and Trademark Office
P.O. Box 1450
Alexandria, VA 22313-1450
www.uspto.gov
DIW Mar-08

GOWLING LAFLEUR HENDERSON, LLP
SUITE 2600
160 ELGIN STREET
OTTAWA ON K1P 1C3
CANADA

COPY MAILED

MAR 0 6 2008

OFFICE OF PETITIONS

In re Application of	:	
Giese et al.	:	
Application Number: 10/321481	:	ON PETITION
Filing Date: 12/18/2002	:	
Attorney Docket Number: 08-894608US	:	

This is a decision on the petition filed on February 1, 2008, under 37 CFR 1.137(a)[1] to revive the above-identified application.

The petition is **dismissed**.

Any request for reconsideration of this decision must be submitted within **TWO (2) MONTHS** from the mail date of this decision. Extensions of time under 37 CFR 1.136(a) are permitted. The reconsideration request should include a cover

---

[1] A grantable petition under 37 CFR 1.137(a) must be accompanied by:

(1) the required reply, unless previously filed; In a nonprovisional application abandoned for failure to prosecute, the required reply may be met by the filing of a continuing application. In a nonprovisional utility or plant application filed on or after June 8, 1995, and abandoned for failure to prosecute, the required reply may also be met by the filing of a request for continued examination in compliance with § 1.114. In an application or patent, abandoned or lapsed for failure to pay the issue fee or any portion thereof, the required reply must be the payment of the issue fee or any outstanding balance thereof. In an application abandoned for failure to pay the publication fee, the required reply must include payment of the publication fee.

(2) the petition fee as set forth in 37 CFR 1.17(l);

(3) a showing to the satisfaction of the Director that the entire delay in filing the required reply from the due date for the reply until the filing of a grantable petition pursuant to 37 CFR 1.137(a) was unavoidable; and

(4) any terminal disclaimer (and fee as set forth in 37 CFR 1.20(d)) required pursuant to 37 CFR 1.137(c)).

letter entitled "Renewed Petition under 37 CFR 1.137(a)" or as discussed below "Renewed Petition under 37 CFR 1.137(b)."

The application became abandoned on December 1, 2007, for failure to file a proper response to the final Office action mailed on May 30, 2007, which set a three (3) month shortened statutory period for reply. An amendment after final rejection was filed on July 30, 2007. However, the examiner determined that the amendment did not place the application in *prima facie* condition for allowance, and an Advisory Action Before the Filing of an Appeal Brief was mailed on January 23, 2008. The filing of the present petition precedes the mailing of Notice of Abandonment.

Petitioners assert unavoidable delay responding to the final Office action because the Advisory Action was not mailed out until the period for reply to the final Office action mailed on May 30, 2007, had expired. Petitioners have filed a Notice of Appeal and fee as the reply required by the petition under 37 CFR 1.137(a).

The Director may revive an abandoned application if the delay in responding to the relevant outstanding Office requirement is shown to the satisfaction of the Director to be "unavoidable".[2] Decisions on reviving abandoned applications on the basis of "unavoidable" delay have adopted the reasonably prudent person standard in determining if the delay was unavoidable:

> The word 'unavoidable' . . . is applicable to ordinary human affairs, and requires no more or greater care or diligence than is generally used and observed by prudent and careful men in relation to their most important business. It permits them in the exercise of this care to rely upon the ordinary and trustworthy agencies of mail and telegraph, worthy and reliable employees, and such other means and instrumentalities as are usually employed in such important business. If unexpectedly, or through the unforeseen fault or imperfection of these agencies and instrumentalities, there occurs a failure, it may properly be said to be unavoidable, all other conditions of promptness in its rectification being present.[3]

---

[2] 35 U.S.C. § 133.

[3] In re Mattullath, 38 App. D.C. 497, 514-15 (1912)(quoting Ex parte Pratt, 1887 Dec. Comm'r Pat. 31, 32-33 (1887)); see also Winkler v. Ladd, 221 F. Supp. 550, 552, 138 USPQ 666, 167-68 (D.D.C. 1963), aff'd, 143 USPQ 172 (D.C. Cir. 1963); Ex parte Henrich, 1913 Dec. Comm'r Pat. 139, 141 (1913). In addition, decisions on revival are made on a "case-by-case basis, taking all the facts and circumstances into account." Smith v. Mossinghoff, 671 F.2d 533, 538, 213 USPQ 977, 982 (D.C. Cir. 1982). Finally, a petition cannot be granted where a petitioner has failed to

The showing of record is inadequate to establish unavoidable delay within the meaning of 35 U.S.C. § 133 and 37 CFR 1.137(a).[4] Specifically, an application is "unavoidably" abandoned only where petitioner, or counsel for petitioner, takes all action necessary for a proper response to the outstanding Office action, but through the intervention of unforeseen circumstances, such as failure of mail, telegraph, facsimile, or the negligence of otherwise reliable employees, the response is not timely received in the Office.[5]

Petitioners should note that a proper response to a final rejection (such as the Office action of May 30, 2007), must be in the form of an appeal or a continuation application. The filing of an amendment placing the application in condition for allowance is permitted under the rules, but entry of such an amendment is not a matter of right. It is clear from 37 CFR 1.116 that abandonment of an application is risked when an amendment after a final Office action is filed. The rule clearly indicates that the mere filing of an amendment does not relieve petition of the duty of taking appropriate action to save the application from abandonment.

Therefore, whether petitioners received an Advisory Action or not, prior to the expiration of the six month statutory period, the only right petitioners were entitled to was that of appealing the final rejection, filing a continuing application, or requesting continued examination by filing a submission and the required fee. This application became abandoned for failure on the part of petitioners to file an appeal, a continuing application, or a request for continued examination accompanied by a submission.

As noted in MPEP 711.03(c):

> Delay resulting from the lack of knowledge or improper application of the patent statute, rules of practice, or the MPEP, however, does not constitute "unavoidable" delay.[6] For example, as 37 CFR 1.116 and 1.135(b) are manifest that proceedings concerning an amendment after final rejection will not operate to avoid abandonment

---

meet his or her burden of establishing that the delay was "unavoidable." Haines v. Quigg, 673 F. Supp. 314, 316-17, 5 USPQ2d 1130, 1131-32 (N.D. Ind. 1987).

[4] See MPEP 711(c)(III)(C)(2) for a discussion of the requirements for a showing of unavoidable delay.

[5] Ex parte Pratt, 1887 Dec. Comm'r Pat. 31 (Comm'r Pat. 1887).

[6] See Haines, 673 F. Supp. at 317, 5 USPQ2d at 1132; Vincent v. Mossinghoff, 230 USPQ 621, 624 (D.D.C. 1985); Smith v. Diamond, 209 USPQ 1091 (D.D.C. 1981); Potter v. Dann, 201 USPQ 574 (D.D.C. 1978); Ex parte Murray, 1891 Dec. Comm'r Pat. 130, 131 (Comm'r Pat. 1891).

> of the application in the absence of a timely and proper appeal, a delay is not "unavoidable" when the applicant simply permits the maximum extendable statutory period for reply to a final Office action to expire while awaiting a notice of allowance or other action. Finally, a delay caused by an applicant's lack of knowledge or improper application of the patent statute, rules of practice, or the MPEP is not rendered "unavoidable" due to: (a) the applicant's reliance upon oral advice by PTO employees; or (b) the PTO's failure to advise the applicant of any deficiency in sufficient time to permit the applicant to take corrective action.[7]

Furthermore, petitioners are advised that failure to timely receive an Advisory Action is not a basis of unavoidable delay. 37 CFR 1.116 and 1.135(b) are manifest that proceedings concerning an amendment after final rejection will not operate to avoid abandonment of the application in the absence of a timely and proper appeal. A delay is not "unavoidable" when an applicant simply permits the maximum extendable statutory period for reply to a final Office action to expire while awaiting a notice of allowance or other action.[8]

In this case, counsel admittedly received the final Office action mailed on May 30, 2007, but chose not to file a proper reply within the allotted time period. There is no showing that applicants were precluded, as alleged, from timely filing a Notice of Appeal. In summary, the period for filing a proper reply, such as a Notice of Appeal or continuing examination, was not tolled by the filing of an amendment after final rejection or the mailing of an Advisory Action

As the showing of record is insufficient to satisfy the requirements of a grantable petition under 37 CFR 1.137(a), the petition will be dismissed.

ALTERNATIVE VENUE

---

[7] See In re Sivertz, 227 USPQ 255, 256 (Comm'r Pat. 1985); see also In re Colombo, Inc., 33 USPQ2d 1530, 1532 (Comm'r Pat. 1994)(while the Office attempts to notify applicants of deficiencies in their responses in a manner permitting a timely correction, the Office has no obligation to notify parties of deficiencies in their responses in a manner permitting a timely correction).

[8] See MPEP 711.03(c)(III)(C)(2). See In re Colombo, Inc., 33 USPQ2d 1530, 1532 (Comm'r Pat. 1994)(while the Office attempts to notify applicants of deficiencies in their responses in a manner permitting a timely correction, the Office has no obligation to notify parties of deficiencies in their responses in a manner permitting a timely correction).

Petitioner may wish to consider filing a renewed petition under 37 CFR 1.137(b), which now provides that where the delay in reply was unintentional, a petition may be filed to revive an abandoned application or a lapsed patent pursuant to 37 CFR 1.137(b). A grantable petition pursuant to 37 CFR 1.137(b) must be accompanied by:

(1) the required reply, unless previously filed. In a nonprovisional application abandoned for failure to prosecute, the required reply may be met by the filing of a continuing application. In a nonprovisional utility or plant application filed on or after June 8, 1995, and abandoned for failure to prosecute, the required reply may also be met by the filing of a request for continued examination in compliance with § 1.114. In an application or patent, abandoned or lapsed for failure to pay the issue fee or any portion thereof, the required reply must be the payment of the issue fee or any outstanding balance thereof. In an application abandoned for failure to pay the publication fee, the required reply must include payment of the publication fee.

(2) the petition fee as set forth in 37 CFR 1.17(m);

(3) a statement that the entire delay in filing the required reply from the due date for the reply until the filing of a grantable petition pursuant to 37 CFR 1.137(b) was unintentional. The Director may required additional information where there is a question whether the delay was unintentional; and

(4) any terminal disclaimer (and fee as set forth in 37 CFR 1.20(d)) required pursuant to 37 CFR 1.137(c)).

The filing of a petition under the unintentional standard cannot be intentionally delayed and therefore should be filed promptly. A person seeking revival due to unintentional delay cannot make a statement that the delay was unintentional unless the entire delay, including the delay from the date it was discovered that the application was abandoned until the filing of the petition to revive under 37 CFR 1.137(b), was unintentional. A statement that the delay was unintentional is not appropriate if petitioner intentionally delayed the filing of a petition for revival under 37 CFR 1.137(b).

A copy of the form for filing a petition under 37 CFR 1.137(b) to revive an application unintentionally abandoned is enclosed herewith for petitioners' convenience.

Further correspondence with respect to this matter should be addressed as follows:

By mail: Mail Stop Petition
Commissioner for Patents
P.O. Box 1450
Alexandria, VA 22313-1450

By FAX: (571) 273-8300
Attn: Office of Petitions

By hand: Customer Service Window
Mail Stop Petition
Randolph Building
401 Dulany Street
Alexandria, VA 22314

Telephone inquiries concerning this matter may be directed to the undersigned at (571) 272-3231.

D Wood

Douglas I. Wood
Senior Petitions Attorney
Office of Petitions

Enclosure: Form PTO/SB/64

PTO/SB/64 (01-08)
Approved for use through 03/31/2008. OMB 0651-0031
U.S. Patent and Trademark Office; U.S. DEPARTMENT OF COMMERCE
Under the Paperwork Reduction Act of 1995, no persons are required to respond to a collection of information unless it displays a valid OMB control number.

PETITION FOR REVIVAL OF AN APPLICATION FOR PATENT ABANDONED UNINTENTIONALLY UNDER 37 CFR 1.137(b)

Docket Number (Optional)

First named inventor:

Application No.: Art Unit:

Filed: Examiner:

Title:

Attention: Office of Petitions
Mail Stop Petition
Commissioner for Patents
P.O. Box 1450
Alexandria, VA 22313-1450
FAX (571) 273-8300

NOTE: If information or assistance is needed in completing this form, please contact Petitions Information at (571) 272-3282.

The above-identified application became abandoned for failure to file a timely and proper reply to a notice or action by the United States Patent and Trademark Office. The date of abandonment is the day after the expiration date of the period set for reply in the office notice or action plus an extensions of time actually obtained.

APPLICANT HEREBY PETITIONS FOR REVIVAL OF THIS APPLICATION

NOTE: A grantable petition requires the following items:
(1) Petition fee;
(2) Reply and/or issue fee;
(3) Terminal disclaimer with disclaimer fee - required for all utility and plant applications filed before June 8, 1995; and for all design applications; and
(4) Statement that the entire delay was unintentional.

1.Petition fee

☐ Small entity-fee $ _____ (37 CFR 1.17(m)). Applicant claims small entity status. See 37 CFR 1.27.

☐ Other than small entity – fee $ _____ (37 CFR 1.17(m))

2. Reply and/or fee

A. The reply and/or fee to the above-noted Office action in the form of _____(identify type of reply):

☐ has been filed previously on _____.
☐ is enclosed herewith.

B. The issue fee and publication fee (if applicable) of $ _____.

☐ has been paid previously on _____.
☐ is enclosed herewith.

This collection of information is required by 37 CFR 1.137(b). The information is required to obtain or retain a benefit by the public which is to file (and by the USPTO to process) an application. Confidentiality is governed by 35 U.S.C. 122 and 37 CFR 1.11 and 1.14. This collection is estimated to take 1.0 hour to complete, including gathering, preparing, and submitting the completed application form to the USPTO. Time will vary depending upon the individual case. Any comments on the amount of time you require to complete this form and/or suggestions for reducing this burden, should be sent to the Chief Information Officer, U.S. Patent and Trademark Office, U.S. Department of Commerce, P.O. Box 1450, Alexandria, VA 22313-1450. DO NOT SEND FEES OR COMPLETED FORMS TO THIS ADDRESS. **SEND TO: Mail Stop Petition, Commissioner for Patents, P.O. Box 1450, Alexandria, VA 22313-1450.**

If you need assistance in completing the form, call 1-800-PTO-9199 and select option 2.

3. Terminal disclaimer with disclaimer fee

☐ Since this utility/plant application was filed on or after June 8, 1995, no terminal disclaimer is required.

☐ A terminal disclaimer (and disclaimer fee (37 CFR 1.20(d)) of $ _____ for a small entity or $ _____ for other than a small entity) disclaiming the required period of time is enclosed herewith (see PTO/SB/63).

4. STATEMENT: The entire delay in filing the required reply from the due date for the required reply until the filing of a grantable petition under 37 CFR 1.137(b) was unintentional. [NOTE: The United States Patent and Trademark Office may require additional information if there is a question as to whether either the abandonment or the delay in filing a petition under 37 CFR 1.137(b) was unintentional (MPEP 711.03(c), subsections (III)(C) and (D)).]

WARNING:

Petitioner/applicant is cautioned to avoid submitting personal information in documents filed in a patent application that may contribute to identity theft. Personal information such as social security numbers, bank account numbers, or credit card numbers (other than a check or credit card authorization form PTO-2038 submitted for payment purposes) is never required by the USPTO to support a petition or an application. If this type of personal information is included in documents submitted to the USPTO, petitioners/applicants should consider redacting such personal information from the documents before submitting them to the USPTO. Petitioner/applicant is advised that the record of a patent application is available to the public after publication of the application (unless a non-publication request in compliance with 37 CFR 1.213(a) is made in the application) or issuance of a patent. Furthermore, the record from an abandoned application may also be available to the public if the application is referenced in a published application or an issued patent (see 37 CFR 1.14). Checks and credit card authorization forms PTO-2038 submitted for payment purposes are not retained in the application file and therefore are not publicly available.

_____	_____
Signature	Date
_____	_____
Typed or printed name	Registration Number, if applicable
_____	_____
Address	Telephone Number
_____	
Address	

Enclosures: ☐ Fee Payment

☐ Reply

☐ Terminal Disclaimer Form

☐ Additional sheets containing statements establishing unintentional delay

☐ Other: _____

CERTIFICATE OF MAILING OR TRANSMISSION [37 CFR 1.8(a)]

I hereby certify that this correspondence is being:

☐ Deposited with the United States Postal Service on the date shown below with sufficient postage as first class mail in an envelope addressed to: Mail Stop Petition, Commissioner for Patents, P. O. Box 1450, Alexandria, VA 22313-1450.

☐ Transmitted by facsimile on the date shown below to the United States Patent and Trademark Office at (571) 273-8300.

_____	_____
Date	Signature
	_____
	Typed or printed name of person signing certificate

Privacy Act Statement

The **Privacy Act of 1974 (P.L. 93-579)** requires that you be given certain information in connection with your submission of the attached form related to a patent application or patent. Accordingly, pursuant to the requirements of the Act, please be advised that: (1) the general authority for the collection of this information is 35 U.S.C. 2(b)(2); (2) furnishing of the information solicited is voluntary; and (3) the principal purpose for which the information is used by the U.S. Patent and Trademark Office is to process and/or examine your submission related to a patent application or patent. If you do not furnish the requested information, the U.S. Patent and Trademark Office may not be able to process and/or examine your submission, which may result in termination of proceedings or abandonment of the application or expiration of the patent.

The information provided by you in this form will be subject to the following routine uses:

1. The information on this form will be treated confidentially to the extent allowed under the Freedom of Information Act (5 U.S.C. 552) and the Privacy Act (5 U.S.C 552a). Records from this system of records may be disclosed to the Department of Justice to determine whether disclosure of these records is required by the Freedom of Information Act.
2. A record from this system of records may be disclosed, as a routine use, in the course of presenting evidence to a court, magistrate, or administrative tribunal, including disclosures to opposing counsel in the course of settlement negotiations.
3. A record in this system of records may be disclosed, as a routine use, to a Member of Congress submitting a request involving an individual, to whom the record pertains, when the individual has requested assistance from the Member with respect to the subject matter of the record.
4. A record in this system of records may be disclosed, as a routine use, to a contractor of the Agency having need for the information in order to perform a contract. Recipients of information shall be required to comply with the requirements of the Privacy Act of 1974, as amended, pursuant to 5 U.S.C. 552a(m).
5. A record related to an International Application filed under the Patent Cooperation Treaty in this system of records may be disclosed, as a routine use, to the International Bureau of the World Intellectual Property Organization, pursuant to the Patent Cooperation Treaty.
6. A record in this system of records may be disclosed, as a routine use, to another federal agency for purposes of National Security review (35 U.S.C. 181) and for review pursuant to the Atomic Energy Act (42 U.S.C. 218(c)).
7. A record from this system of records may be disclosed, as a routine use, to the Administrator, General Services, or his/her designee, during an inspection of records conducted by GSA as part of that agency's responsibility to recommend improvements in records management practices and programs, under authority of 44 U.S.C. 2904 and 2906. Such disclosure shall be made in accordance with the GSA regulations governing inspection of records for this purpose, and any other relevant (*i.e.*, GSA or Commerce) directive. Such disclosure shall not be used to make determinations about individuals.
8. A record from this system of records may be disclosed, as a routine use, to the public after either publication of the application pursuant to 35 U.S.C. 122(b) or issuance of a patent pursuant to 35 U.S.C. 151. Further, a record may be disclosed, subject to the limitations of 37 CFR 1.14, as a routine use, to the public if the record was filed in an application which became abandoned or in which the proceedings were terminated and which application is referenced by either a published application, an application open to public inspection or an issued patent.
9. A record from this system of records may be disclosed, as a routine use, to a Federal, State, or local law enforcement agency, if the USPTO becomes aware of a violation or potential violation of law or regulation.

UNITED STATES PATENT AND TRADEMARK OFFICE

Commissioner for Patents
United States Patent and Trademark Office
P.O. Box 1450
Alexandria, VA 22313-1450
www.uspto.gov
DIW Apr-08

GOWLING LAFLEUR HENDERSON, LLP
SUITE 2600
160 ELGIN STREET
OTTAWA ON K1P 1C3
CANADA

COPY MAILED

APR 23 2008

OFFICE OF PETITIONS

In re Application of	:	
Giese et al.	:	
Application Number: 10/321481	:	DECISION ON PETITION
Filing Date: 12/18/2002	:	
Attorney Docket Number: 08-894608US	:	

This is a decision on the petition filed on March 19, 2008, under 37 CFR 1.137(b),[1] to revive the above-identified application.

The petition is **GRANTED**.

The application became abandoned on December 1, 2007, for failure to timely file a proper response to the final Office action mailed on May 30, 2007, which set a three (3) month shortened statutory period for reply. On July 30, 2007, an amendment after final rejection was filed. The amendment, however, did not place the application in condition for allowance, and an Advisory Action Before the Filing of an Appeal Brief was mailed on January 23, 2008. On February 1, 2008, a petition under 37 CFR 1.137(a) was filed. On March 10, 2008, the petition was dismissed. The

---

[1] Effective December 1, 1997, the provisions of 37 CFR 1.137(b) now provide that where the delay in reply was unintentional, a petition may be filed to revive an abandoned application or a lapsed patent pursuant to 37 CFR 1.137(b). A grantable petition filed under the provisions of 37 CFR 1.137(b) must be accompanied by:

(1) the required reply, unless previously filed. In a nonprovisional application abandoned for failure to prosecute, the required reply may be met by the filing of a continuing application. In a nonprovisional utility or plant application filed on or after June 8, 1995, and abandoned for failure to prosecute, the required reply may also be met by the filing of a request for continuing examination in compliance with § 1.114. In an application or patent, abandoned or lapsed for failure to pay the issue fee or any portion thereof, the required reply must be the payment of the issue fee or any outstanding balance thereof. In an application, abandoned for failure to pay the publication fee, the required reply must include payment of the publication fee.

(2) the petition fee as set forth in 37 CFR 1.17(m);

(3) a statement that the entire delay in filing the required reply from the due date for the reply until the filing of a grantable petition pursuant to 37 CFR 1.137(b) was unintentional. The Director may required additional information where there is a question whether the delay was unintentional; and

(4) any terminal disclaimer (and fee as set forth in 37 CFR 1.20(d)) required pursuant to 37 CFR 1.137(c)).

filing of the present petition precedes the mailing of Notice of Abandonment.

The statement contained in the instant petition does not set forth that the entire delay from the due date of the required reply to the date of the filing of a grantable petition was unintentional as required by 37 CFR 1.137(b)(3). However, the statement contained in the instant petition is being so construed. **Petitioner must notify the Office if this is not a correct interpretation.**[2]

The Notice of Appeal filed February 1, 2008, has been entered and made of record. Accordingly, the two (2)-month period for filing the Appeal Brief, accompanied by the fee required by law, runs from the date of this decision.

This application is being referred to Technology Center Art Unit 2616 for further processing.

Telephone inquiries concerning this matter may be directed to the undersigned at (571) 272-3231.

/D Wood/

Douglas I. Wood
Senior Petitions Attorney
Office of Petitions

[2] Altough no statement under 37 CFR 1.137(b)(3) is provided, it is noted that, a petition under 37 CFR 1.137(b) is specified, and the fee has been paid in the amount due for a petition under 37 CFR 1.137(b). Accordingly, the petition is being construed as including the statement required by 37 CFR 1.137(b).

UNITED STATES PATENT AND TRADEMARK OFFICE

UNITED STATES DEPARTMENT OF COMMERCE
United States Patent and Trademark Office
Address: COMMISSIONER FOR PATENTS
P.O. Box 1450
Alexandria, Virginia 22313-1450
www.uspto.gov

BURNS, DOANE, SWECKER & MATHIS, L.L.P.
P.O. Box 1404
Alexandria, VA 22313-1404

Mail Date: 04/26/2010

Applicant	: Kent Hermansson	: DECISION ON REQUEST FOR
Patent Number	: 7662138	: RECALCULATION of PATENT
Issue Date	: 02/16/2010	: TERM ADJUSTMENT IN VIEW
Application No	: 10/321,487	: OF WYETH AND NOTICE OF INTENT TO
Filed	: 12/18/2002	: ISSUE CERTIFICATE OF CORRECTION
		:

The Request for Recalculation is **GRANTED** to the extent indicated.

The patent term adjustment has been determined to be **634** days. The USPTO will *sua sponte* issue a certificate of correction reflecting the amount of PTA days determined by the recalculation.

Prior to the issuance of the certificate of correction, the USPTO will afford patentee an opportunity to be heard and request reconsideration. Accordingly, patentee has **one month or thirty (30) days**, whichever is longer, to file a request for reconsideration of this patent term adjustment calculation. See 35 U.S.C. 154(b)(3)(B)(ii) and 37 CFR 1.322(a)(4). No extensions of time will be granted under 37 CFR 1.136.

Patentee should use document code PET.OP if electronically filing a request for reconsideration of this patent term adjustment calculation. The patentee must also include the information required by 37 CFR 1.705(b)(2) and the fee required by 37 CFR 1.18(e). If patentee does not file a timely request for reconsideration of this patent term adjustment calculation including the information required by 37 CFR 1.705(b)(2) and the fee required by 37 CFR 1.18(e), the USPTO will issue a certificate of correction reflecting the PTA determination noted above.

Patentee should be aware that in order to preserve the right to review in the United States District Court for the District of Columbia of the USPTO patent term adjustment determination, patentee must ensure that he or she also take the steps required under 35 U.S.C. 154(b)(4)(A) in a timely manner. Nothing in the request for recalculation should be construed as providing an alternative time frame for commencing a civil action under 35 U.S.C. 154(b)(4)(A).

Any questions concerning this decision should be directed to the Office of Patent Legal Administration at 571-272-7702.

UNITED STATES PATENT AND TRADEMARK OFFICE

Commissioner for Patents
United States Patent and Trademark Office
P.O. Box 1450
Alexandria, VA 22313-1450
www.uspto.gov

MANELLI DENISON & SELTER
2000 M STREET NW SUITE 700
WASHINGTON, DC 20036-3307

COPY MAILED

OCT 2 4 2005

OFFICE OF PETITIONS

In re Patent No. 6,844,380 :
Issue Date: January 18, 2005 :
Application No. 10/321,495 : ON PETITION
Filed: December 18, 2002 :
Patentee: Basil D. Favis, et al. :

This is in response to the paper filed April 22, 2005 under 37 CFR 1.27(g) (2) requesting that status as a Small Entity be removed.

In accordance with the April 22, 2005 request, status as a Small Entity has been removed.

There is no indication that the person signing the instant petition was ever given a power of attorney or authorization of agent to prosecute the above-identified application. If the person signing the instant petition desires to receive future correspondence regarding this application, the appropriate power of attorney or authorization of agent must be submitted. While a courtesy copy of this decision is being mailed to the person signing the instant petition, all future correspondence will be directed to the address currently of record until such time as appropriate instructions are received to the contrary.

This application is no longer entitled to small entity status. Accordingly, all future fees paid in this application must be paid at the large entity rate.

Telephone inquiries concerning this decision should be directed to the undersigned at (571) 272-3229.

Retta Williams

Retta Williams
Petitions Examiner
Office of Petitions

cc: ALAIN M. LECLERC
GOUDREAU GAGE DUBUC
STOCK EXCHANGE TOWER
SUITE 3400, P.O. BOX 242, 800 PLACE-VICTORIA
MONTREAL, QUEBEC, CANADA H4Z 1E9

UNITED STATES PATENT AND TRADEMARK OFFICE

COMMISSIONER FOR PATENTS
UNITED STATES PATENT AND TRADEMARK OFFICE
P.O. BOX 1450
ALEXANDRIA, VA 22313-1450
www.uspto.gov

Joan K. Lawrence, Esq.
2161 N. Lincoln St.
Arlington, VA 22207

COPY MAILED

AUG 14 2006

OFFICE OF PETITIONS

In re Application of :
Omps : DECISION ON PETITION
Application No. 10/321,511 :
Filed: December 18, 2002 :
Atty. Dkt. No.: JTO-2 :

This is a decision on the petition under 37 CFR 1.137(b), filed July 3, 2006, to revive the above-identified application.

The petition is **GRANTED**.

This application became abandoned April 6, 2006 for failure to timely file a proper reply to the final Office action mailed October 5, 2005. A reply and an extension of time request were filed April 5, 2006. The reply failed to place the application in condition for allowance, as indicated in the Advisory Action mailed May 4, 2006. Notice of Abandonment was mailed June 7, 2006.

A grantable petition pursuant to 37 C.F.R. § 1.137(b) must be accompanied by: (1) the required reply to the outstanding Office action or notice, unless previously filed; (2) the petition fee as set forth in 37 C.F.R. § 1.17(m); (3) a statement that the entire delay in filing the required reply from the due date for the reply until the filing of a grantable petition pursuant to 37 C.F.R. § 1.137(b) was unintentional; and (4)any terminal disclaimer (and fee set forth in 37 C.F.R. § 1.20(d)) required pursuant to 37 C.F.R. § 1.137(c).

The instant petition has been reviewed and found in compliance with the provisions of 37 CFR 1.137(b). Accordingly, the failure to timely submit a proper reply to the final Office action is accepted as having been unintentionally delayed.

The Notice of Appeal has been entered and made of record. The two-month period for filing an appeal brief (accompanied by the fee required by 37 CFR 1.17(c)), runs from the date of this decision.

This application will be forwarded to Technology Center 3600 for further processing.

Application No. 10/321,511

Telephone inquiries concerning this matter may be directed to the undersigned at (571) 272-3205.

Alesia M. Brown
Petitions Attorney
Office of Petitions

UNITED STATES PATENT AND TRADEMARK OFFICE

COMMISSIONER FOR PATENTS
UNITED STATES PATENT AND TRADEMARK OFFICE
P.O. BOX 1450
ALEXANDRIA, VA 22313-1450
www.uspto.gov

TROXELL LAW OFFICE PLLC
ONE SKYLINE PLACE
SUITE 1404
5205 LEESBURG PIKE
FALLS CHURCH, VA 22041

COPY MAILED

APR 0 6 2004

OFFICE OF PETITIONS

In re Application of :
Wen-Chang Wu :
Application No. 10/321,513 : ON PETITION
Filed: December 18, 2002 :
Attorney Docket No. BHT-3110-147 :

This is a decision on the petition under 37 CFR 1.137(b), filed March 18, 2004, to revive the above-identified application.

The petition is **GRANTED**.

The above-identified application became abandoned for failure to reply in a timely manner to the Office action under Ex parte Quayle, 1935 Dec. Comm'r Pat. 11 (1935), mailed August 22, 2003, which set a shortened statutory period for reply of two (2) months. No extensions of time under the provisions of 37 CFR 1.136(a) were obtained. Accordingly, the above-identified application became abandoned on October 23, 2003.

Telephone inquiries concerning this decision should be directed to Wan Laymon at (703) 305-9282.

The application file is being referred to Technology Center AU 2833.

Wan Laymon
Petitions Examiner
Office of Petitions
Office of the Deputy Commissioner
for Patent Examination Policy

UNITED STATES PATENT AND TRADEMARK OFFICE

Commissioner for Patents
United States Patent and Trademark Office
P.O. Box 1450
Alexandria, VA 22313-1450
www.uspto.gov

MAIL

FEB 23 2009

DIRECTOR'S OFFICE
TECHNOLOGY CENTER 2600

HARNESS, DICKEY & PIERCE, P.L.C.
P.O. BOX 8910
RESTON VA 20195

In re Application of:
TANAKA, SHIGEKI, et al.
Application Serial No.: 10/321,534
Filed: December 18, 2002
For: GRAY SCALE DISPLAY REFERENCE VOLTAGE GENERATING CIRCUIT AND LIQUID CRYSTAL DISPLAY DEVICE USING THE SAME

DECISION
ON PETITION

This is a decision on the petition to withdraw finality of office action filed December 11, 2008, pursuant to 37 CFR § 1.181.

Petitioner contends that the finality of the June 11, 2008 Office Action is improper because the Examiner introduced at least one ground of rejection not necessitated by amendment.

BACKGROUND

A review of the file indicates a non-final rejection was made on December 13, 2007. In the office action, claims 3, 10, and 12 were rejected under 35 USC 112, second paragraph, as being incomplete for omitting essential structural cooperative relationships of elements, such omission amounting to a gap between the necessary structural connections. The rejection went on to state, The omitted structural cooperative relationships are between the "reference voltage generating section," "correction information storing section," and "adjustment section" claimed in base claim 1 versus respectively the "reference voltage generating section," "correction information storing section," and "adjustment section" claimed in dependent claim 3. It would be unclear to one having ordinary skill in the art, whether the claims are referring to the same sections, or rather reciting pairs of distinct and independent sections.

The applicant responded by filing an amendment/remarks on February 27, 2008. Claims 1, 3, 5, 10, and 14, have been amended. In the remarks, applicants made the conclusion, "As claims 3 and 10 are amended to remove any confusion between the "reference voltage generating section," "correction information storing section," and "adjustment section" recited in the independent claims, withdrawal of the rejection is respectfully requested."

The examiner responded with a final rejection on June 11, 2008. In the final rejection, the rejection statement made was "Claims 1-7 and 10-16 are rejected under 35 U.S.C. 112, second paragraph, as being indefinite for failing to particularly point out and distinctly claim the subject matter which applicant regards as the invention." The rejection went on, in great detail, for over 9 pages referencing all of the infractions under 35 USC 112, second paragraph for claims 1-7 and 10-16.

REGULATIONS AND PRACTICE

MPEP 706.07(a) [R-6] Final Rejection, When Proper on Second Action states:

Under present practice, second or any subsequent actions on the merits shall be final, except where the examiner introduces a new ground of rejection that is neither necessitated by applicant's amendment of the claims, nor based on information submitted in an information disclosure statement filed during the period set forth in 37 CFR 1.97(c) with the fee set forth in 37 CFR 1.17(p).

OPINION

Petitioner contends, page 6 of the final office action set forth a separate rejection of claims 4, 11, 13, and 15 under 35 USC 112, second paragraph, on grounds not previously set forth. Because these claims were not amended in Applicants' February 27, 2008 Amendment and the grounds of rejection of these claims were not previously set forth during prosecution at least these rejections constitute new grounds of rejection not necessitated by Applicants' amendment. These claims were also not amended in the Applicants' February 27, 2008 response. In reviewing the prosecution history, the non final office action mailed December 13, 2007 did not include a rejection of claims 4, 11, 13, and 15 under 35 USC 112, second paragraph. The final rejection on June 11, 2008 indicates claim 4 and 11 are rejected under 35 USC 112 second paragraph because "An omitted structural cooperative relationship results from the claimed subject matter: "a *liquid crystal display device"* (in line 1) and *"a gray scale display reference voltage generating circuit"* (in line 2)." Also, the final rejection on June 11, 2008 indicates claim 15 is rejected under 35 USC 112, second paragraph, because "Claim 15 recites the limitation *"types"* (in line 15). The addition of the word *"types"* to an otherwise definite expression extends the scope of the expression so as to render it indefinite. Ex parte Copenhaver, 109 USPQ 118 (Bd. App. 1955). It would be unclear to one having ordinary skill in the art what *"types"* is intended to convey. See MPEP 2173.05(b)." The amendment filed February 27, 2008 shows claim 4, 11, 13, and 15 were not amended.

Clearly the rejection of claims 4, 11, 13, and 15 under 35 USC 112, second paragraph in the final office action of June 11, 2008 were new grounds of rejection. Also, there is no indication in the file record that the rejection of at least claims 4, 11, and 15 are necessitated by amendment. Consequently, the finality of the office action of June 11, 2008 is improper.

For the above stated reasons, the petition to withdraw the finality of office action on June 11, 2008 is **GRANTED**.

The Final rejection mailed June 11, 2008 is hereby withdrawn. The amendment filed September 11, 2008 is entered. The Pre-appeal brief conference request filed December 11, 2008 is dismissed. The Application is being returned to the examiner to respond to the amendment filed September 11, 2008.

Wanda L. Walker, Director
Technology Center 2600
Communications

UNITED STATES PATENT AND TRADEMARK OFFICE

Commissioner for Patents
United States Patent and Trademark Office
P.O. Box 1450
Alexandria, VA 22313-1450
www.uspto.gov

MILLEN, WHITE, ZELANO & BRANIGAN, P.C.
2200 CLARENDON BOULEVARD, SUITE 1400
ARLINGTON, VA 22201

COPY MAILED

MAR 0 2 2007

OFFICE OF PETITIONS

In re Application of :
Dario Neri Zurich et al :
Application No. 10/321,558 : ON PETITION
Filed: December 18, 2002 :
Attorney Docket No. NOTAR-1C1 :

This is a decision on the petition under the unintentional provisions of 37 CFR 1.137(b), filed August 8, 2006, to revive the above-identified application.

The petition is **GRANTED**.

This application became abandoned as a result of petitioner's failure to file an appeal brief (and fee required by 37 CFR 41.20(b)(2)) within the time period provided in 37 CFR 41.37(a)(1). As an appeal brief (and appeal brief fee) was not filed within the extendable two (2) month period of the filing of the Notice of Appeal on October 21, 2005, and a five month extension of time under the provisions of 37 CFR 1.136(a) having been obtained, the appeal is dismissed and the proceedings as to the rejected claims terminated; see 37 CFR 1.197(b). As no claim was allowed, the application became abandoned on May 22, 2006. *See* MPEP 1215.04. A Notice of Abandonment was mailed on July 10, 2006.

The petition satisfies the requirements of 37 CFR 1.137(b) in that petitioner has supplied (1) the reply in the form of a Request for Continued Examination (RCE),[1] filing fee of $790, and the submission required by 37 CFR 1.114 (consideration of the amendment/reply received May 22, 2006), (2) the petition fee of $1,500, and (3) a proper statement of unintentional delay. Accordingly, the failure to timely take action following the filing of the Notice of Appeal on October 21, 2005 is acceptable as being unintentionally delayed.

[1] The RCE filed with the petition on August 8, 2006 was unsigned. A signed RCE was received on February 27, 2007.

Telephone inquiries concerning this decision should be directed to the undersigned at (571) 272-3218.

This application is being referred to Technology Center AU 1645 for processing of the RCE and for appropriate action by the Examiner in the normal course of business on the reply/amendment submitted in accordance with 37 CFR 1.114 on May 22, 2006.

Frances Hicks
Petitions Examiner
Office of Petitions

UNITED STATES PATENT AND TRADEMARK OFFICE

COMMISSIONER FOR PATENTS
UNITED STATES PATENT AND TRADEMARK OFFICE
P.O. BOX 1450
ALEXANDRIA, VA 22313-1450
www.uspto.gov

FINNEGAN, HENDERSON, FARABOW, GARRETT & DUNNER
LLP
901 NEW YORK AVENUE, NW
WASHINGTON, DC 20001-4413

COPY MAILED

AUG 14 2006

OFFICE OF PETITIONS

In re Application of :
Ikenaka : DECISION ON PETITION
Application No. 10/321,566 :
Filed: December 18, 2002 :
Dkt. No.: 02860.0731 :

This is a decision on the petition to withdraw the holding of abandonment under 37 CFR 1.181, filed June 29, 2006.

This application was held abandoned June 25, 2005 for failure to timely submit a proper reply to the communication mailed March 24, 2005. Notice of Abandonment was mailed June 8, 2006.

Petitioner asserts that a response to the Office communication was timely submitted on June 23, 2005 and has submitted as proof of USPTO receipt of the response a return postcard dated stamped March 23, 2005.

The original response submitted June 23, 2005 has not been located. However, in view of the evidence presented, the petition to withdraw the holding of abandonment is hereby **GRANTED**.

The Notice of Abandonment is hereby **VACATED** and the holding of abandonment is **WITHDRAWN**.

The application file is being forwarded to Technology Center 2600 for further processing.

Telephone inquiries concerning this matter may be directed to the undersigned at (571) 272-3205.

Alesia M. Brown
Petitions Attorney
Office of Petitions

UNITED STATES PATENT AND TRADEMARK OFFICE

Commissioner for Patents
United States Patent and Trademark Office
P.O. Box 1450
Alexandria, VA 22313-1450
www.uspto.gov

FITZPATRICK CELLA HARPER & SCINTO
30 ROCKEFELLER PLAZA
NEW YORK NY 10112

COPY MAILED

DEC 13 2004

OFFICE OF PETITIONS

In re Application of :
Masafumi Kyogaku et al :
Application No. 10/321,605 :
Filed: December 18, 2002 :
Attorney Docket No. 03560.003198 :

ON PETITION

This is a decision on the petition, filed December 10, 2004, under 37 CFR 1.313(c)(2) to withdraw the above-identified application from issue after payment of the issue fee.

The petition is **GRANTED.**

The above-identified application is withdrawn from issue for consideration of a submission under 37 CFR 1.114 (request for continued examination). See 37 CFR 1.313(c)(2).

Petitioner is advised that the issue fee paid on February 27, 2004 in the above-identified application cannot be refunded. If, however, the above-identified application is again allowed, petitioner may request that it be applied towards the issue fee required by the new Notice of Allowance.[1]

Telephone inquiries should be directed to the undersigned at (571) 272-3208.

The examiner of Technology Center AU 2879 will consider the request for continued examination under 37 CFR 1.114.

Karen Creasy

Karen Creasy
Petitions Examiner
Office of Petitions
Office of the Deputy Commissioner
for Patent Examination Policy

[1] The request to apply the issue fee to the new Notice may be satisfied by completing and returning the new Issue Fee Transmittal Form PTOL-85(b), which includes the following language thereon: "Commissioner for Patents is requested to apply the Issue Fee and Publication Fee (if any) or re-apply any previously paid issue fee to the application identified above." Petitioner is advised that, whether a fee is indicated as being due or not, the Issue Fee Transmittal Form **must** be completed and timely submitted to avoid abandonment. Note the language in bold text on the first page of the Notice of Allowance and Fee(s) Due (PTOL-85).

UNITED STATES PATENT AND TRADEMARK OFFICE

Commissioner for Patents
United States Patent and Trademark Office
P.O. Box 1450
Alexandria, VA 22313-1450
www.uspto.gov

FITZPATRICK CELLA HARPER & SCINTO
30 ROCKEFELLER PLAZA
NEW YORK, NY 10112

COPY MAILED
MAY 19 2006
OFFICE OF PETITIONS

In re Patent No. 6,992,428	:	
Issued: January 31, 2006	:	LETTER REGARDING PTA
Application No. 10/321,605	:	
Filed: December 18, 2002	:	
Atty. Dkt. No.: 03560.003198	:	

This letter is in response to the "COMMENTS ON DETERMINATION OF PATENT TERM ADJUSTMENT," filed March 23, 2006. The Office thanks patentees for their good faith and candor in bringing this to our attention.

The request for review of the patent term adjustment is **DISMISSED**.

The above-identified application matured into U.S. Pat. No. 6,992,428 on January 31, 2006. The patent issued with a PTA of 143 days. Patentees have requested review of the PTA determination and further state that the PAIR system appears to indicate an incorrect number of days determined for the USPTO Delay and/or for the Applicants' Delay. Patentees do not specify the nature of the incorrect determination.

A review of the application history reveals that at the time of issuance of the patent, an adjustment of 185 days could be attributed to the Office in accordance with 37 CFR 1.702(a)(4) and 1.703(a)(6). The adjustment of 185 days was reduced a total of 42 days in accordance with 37 CFR 1.704(c), yielding an adjustment of 143 days as indicated on the patent.

If patentees remain of the belief that an error in the adjustment exists, patentees should clarify the error in a letter to the Office.

As this letter was submitted as an advisement to the Office of an error, no fee is due in connection with this matter. The Office thanks patentees for their good faith and candor in bringing this to the attention of the Office.

Telephone inquiries specific to this matter should be directed to Petitions Attorney Alesia M. Brown at (571) 272-3205.

Nancy Johnson
Senior Petitions Attorney
Office of Petitions

SPE RESPONSE FOR CERTIFICATE OF CORRECTION

Paper No.: _____

DATE : Jan. 23, 2006

TO PETITIONS : LOC UNIT 4700 (*Marianne Jenkins*)

SUBJECT : Request for Certificate of Correction on Patent No.: 6,970,291

A response is requested with respect to the accompanying request for a certificate of correction.

Please complete this form and return with file, within **7** days to:
Palm location **7580, Certificates of Correction Branch – South Tower – 9A22**
If response is for an IFW, **return to employee (named below) via PUBSCofC Team in MADRAS.**
With respect to the change(s) requested, correcting Office and/or Applicant's errors, **should the patent read as shown in the certificate of correction** (COCIN)? No new matter should be introduced, nor should the scope or meaning of the claims be changed.
Please see the Petition re: CofC for Assignee. Your denial or approval decision is needed below.

sp STACY POWELL

Thank You For Your Assistance

Certificates of Correction Branch
Tel. No. 703-308-9390 x120

The request for issuing the above-identified correction(s) is hereby:
Note your decision on the appropriate box.

- ☐ **Approved** — **All** changes apply.
- ☐ **Approved in Part** — Specify below which changes **do not** apply.
- ☐ **Denied** — State the reasons for denial below.

Comments:

_____

_____

_____

_____

_____

_____ _____
SPE **Art Unit**

SPE RESPONSE FOR CERTIFICATE OF CORRECTION

Paper No.: _____

DATE : Jan. 23, 2006

TO PETITIONS : LOC UNIT 4700 (*Marianne Jenkins*)

SUBJECT : Request for Certificate of Correction on Patent No.: 6,970,291

A response is requested with respect to the accompanying request for a certificate of correction.

Please complete this form and return with file, within 7 days to:
Palm location 7580, Certificates of Correction Branch – South Tower – 9A22
If response is for an IFW, **return to employee (named below) via PUBSCofC Team in MADRAS.**
With respect to the change(s) requested, correcting Office and/or Applicant's errors, **should the patent read as shown in the certificate of correction** (COCIN)? No new matter should be introduced, nor should the scope or meaning of the claims be changed.
Please see the Petition re: CofC for Assignee. Your denial or approval decision is needed below.

sp STAT POWELL

Thank You For Your Assistance

Certificates of Correction Branch
Tel. No. 703-308-9390 x120

The request for issuing the above-identified correction(s) is hereby:
Note your decision on the appropriate box.

☑ **Approved**	**All** changes apply.
☐ **Approved in Part**	Specify below which changes **do not** apply.
☐ **Denied**	State the reasons for denial below.

Comments:

See petition Decision

C98 — **SPE**

4700 — **Art Unit**

UNITED STATES PATENT AND TRADEMARK OFFICE

Commissioner for Patents
United States Patent and Trademark Office
P.O. Box 1450
Alexandria, VA 22313-1450
www.uspto.gov

C. IRVIN MCCLELLAND
OBLON, SPIVAK, MCCLELLAND, MAIER & NEUSTADT, P.C.
1940 DUKE STREET
ALEXANDRIA VA 22314

COPY MAILED
SEP 28 2006
OFFICE OF PETITIONS

In re Patent of :
Kazuya Kamon :
Application Number: 10/321,607 :DECISION ON PETITION
Patent: 6,970,291
Attorney Docket Number: 231539US2 DIV :
Filing Date: December 18, 2002 :
Issue Date: November 29, 2005 :

This is a decision on the petition to correct the assignee under 37 CFR 1.183 filed on January 4, 2006. The petition is properly treated under 37 CFR 3.81 (b)[1] to correct the assignee on the front page of the above-identified patent by way of a Certificate of Correction.

The petition is **Granted**.

Petitioner has submitted a $400.00 petition fee. Pursuant to petitioner's request deposit account 15-0030 is being refunded $270.00. The certificate of correction pursuant 37 CFR 1.20 (a) fee is $100.00 and the processing fee pursuant to 37 CFR 1.17(I) is $130.00. A petition fee is no longer required.

This application is being forwarded to the Certificate of Correction Branch for issuance of the requested Certificate of Correction.

Telephone inquiries concerning this matter should be directed to the undersigned at (571) 272-3215. Any questions concerning the issuance of the Certificate of Correction

[1]See 69 Fed. Reg. 29865 (May 26, 2004).

should be directed to the Certificate of Correction Branch at (703) 305-8309.

Charlema R. Grant

Charlema R. Grant
Petitions Attorney
Office of Petitions

UNITED STATES PATENT AND TRADEMARK OFFICE

UNITED STATES DEPARTMENT OF COMMERCE
United States Patent and Trademark Office
Address: COMMISSIONER FOR PATENTS
P.O. Box 1450
Alexandria, Virginia 22313-1450
www.uspto.gov

STAAS & HALSEY LLP
SUITE 700
1201 NEW YORK AVENUE, N.W.
WASHINGTON, DC 20005

Mail Date: 04/21/2010

Applicant	: Jong-Hwa Cho	: DECISION ON REQUEST FOR
Patent Number	: 7630215	: RECALCULATION of PATENT
Issue Date	: 12/08/2009	: TERM ADJUSTMENT IN VIEW
Appliction No	: 10/321,632	: OF WYETH AND NOTICE OF INTENT TO
Filed	: 12/18/2002	: ISSUE CERTIFICATE OF CORRECTION
		:

The Request for Recalculation is **GRANTED** to the extent indicated.

The patent term adjustment has been determined to be **1251** days. The USPTO will *sua sponte* issue a certificate of correction reflecting the amount of PTA days determined by the recalculation.

Prior to the issuance of the certificate of correction, the USPTO will afford patentee an opportunity to be heard and request reconsideration. Accordingly, patentee has **one month or thirty (30) days**, whichever is longer, to file a request for reconsideration of this patent term adjustment calculation. See 35 U.S.C. 154(b)(3)(B)(ii) and 37 CFR 1.322(a)(4). No extensions of time will be granted under 37 CFR 1.136.

Patentee should use document code PET.OP if electronically filing a request for reconsideration of this patent term adjustment calculation. The patentee must also include the information required by 37 CFR 1.705(b)(2) and the fee required by 37 CFR 1.18(e). If patentee does not file a timely request for reconsideration of this patent term adjustment calculation including the information required by 37 CFR 1.705(b)(2) and the fee required by 37 CFR 1.18(e), the USPTO will issue a certificate of correction reflecting the PTA determination noted above.

Patentee should be aware that in order to preserve the right to review in the United States District Court for the District of Columbia of the USPTO patent term adjustment determination, patentee must ensure that he or she also take the steps required under 35 U.S.C. 154(b)(4)(A) in a timely manner. Nothing in the request for recalculation should be construed as providing an alternative time frame for commencing a civil action under 35 U.S.C. 154(b)(4)(A).

Any questions concerning this decision should be directed to the Office of Patent Legal Administration at 571-272-7702.

SPE RESPONSE FOR CERTIFICATE OF CORRECTION

Paper No.: _____

DATE : November 1, 2005

TO SPE OF : ART UNIT 1756

SUBJECT : Request for Certificate of Correction on Patent No.: 6,913,862 10/321,643

A response is requested with respect to the accompanying request for a certificate of correction.

Please complete this form and return with file, within **7** days to:
Palm location **7580, Certificates of Correction Branch – South Tower – 9A22**
If response is for an IFW, **return to employee (named below) via PUBSCofC Team in MADRAS.**
With respect to the change(s) requested, correcting Office and/or Applicant's errors, should the patent read as shown in the certificate of correction (COCIN)? No new matter should be introduced, nor should the scope or meaning of the claims be changed.

Magdalene Talley

Thank You For Your Assistance

Certificates of Correction Branch
Tel. No. 703-308-9309 ext. 116

The request for issuing the above-identified correction(s) is hereby:
Note your decision on the appropriate box.

☒ **Approved**	**All** changes apply.
☐ **Approved in Part**	Specify below which changes **do not** apply.
☐ **Denied**	State the reasons for denial below.

Comments:

_____

_____

_____

_____

_____

Mark L. Bell 1756

SPE **Art Unit**

UNITED STATES PATENT AND TRADEMARK OFFICE

Commissioner for Patents
United States Patent and Trademark Office
P.O. Box 1450
Alexandria, VA 22313-1450
www.uspto.gov

OBLON, SPIVAK, MCCLELLAND MAIER & NEUSTADT, P.C.
1940 DUKE STREET
ALEXANDRIA VA 22314

COPY MAILED

JAN 24 2008

OFFICE OF PETITIONS

In re Application of	:	
Hayashi Otsuki et al	:	
Application No. 10/321,646	:	DECISION GRANTING PETITION
Filed: December 18, 2002	:	UNDER 37 CFR 1.313(c)(2)
Attorney Docket No. 231915US2CIP	:	

This is a decision on the petition under 37 CFR 1.313(c)(2), filed January 23, 2008, to withdraw the above-identified application from issue after payment of the issue fee.

The petition is **GRANTED**.

The above-identified application is withdrawn from issue for consideration of a submission under 37 CFR 1.114 (request for continued examination). *See* 37 CFR 1.313(c)(2).

Petitioner is advised that the issue fee paid on December 6, 2007 cannot be refunded. If, however, this application is again allowed, petitioner may request that it be applied towards the issue fee required by the new Notice of Allowance.[1]

Telephone inquiries should be directed to the undersigned at (571) 272-3208.

This application is being referred to Technology Center AU 2886 for processing of the request for continued examination under 37 CFR 1.114 and for consideration of the concurrently filed IDS.

Karen Creasy
Petitions Examiner
Office of Petitions

[1] *The request to apply the issue fee to the new Notice may be satisfied by completing and returning the new Part B – Fee(s) Transmittal Form (along with any balance due at the time of submission). Petitioner is advised that the Issue Fee Transmittal Form must be completed and timely submitted to avoid abandonment of the application.*

UNITED STATES PATENT AND TRADEMARK OFFICE

Commissioner for Patents
United States Patent and Trademark Office
P.O. Box 1450
Alexandria, VA 22313-1450
www.uspto.gov

COPY MAILED

MAR 14 2007

OFFICE OF PETITIONS

MORGAN LEWIS & BOCKIUS LLP
1111 PENNSYLVANIA AVENUE NW
WASHINGTON DC 20004

In re Application of :
Ryuuichi Shiraishi :
Application No. 10/321,668 : ON PETITION
Filed: December 18, 2002 :
Attorney Docket No. 040894-5867 :

This is a decision on the petition, filed March 14, 2007, under 37 CFR 1.313(c)(2) to withdraw the above-identified application from issue after payment of the issue fee.

The petition is **GRANTED.**

The above-identified application is withdrawn from issue for consideration of a submission under 37 CFR 1.114 (request for continued examination). See 37 CFR 1.313(c)(2).

Petitioner is advised that the issue fee paid on February 20, 2007 in the above-identified application cannot be refunded. If, however, the above-identified application is again allowed, petitioner may request that it be applied towards the issue fee required by the new Notice of Allowance.[1]

Telephone inquiries should be directed to the undersigned at (571) 272-3208.

The examiner of Technology Center AU 2625 will consider the request for continued examination under 37 CFR 1.114.

Karen Creasy

Karen Creasy
Petitions Examiner
Office of Petitions

[1] The request to apply the issue fee to the new Notice may be satisfied by completing and returning the new Issue Fee Transmittal Form PTOL-85(b), which includes the following language thereon: "Commissioner for Patents is requested to apply the Issue Fee and Publication Fee (if any) or re-apply any previously paid issue fee to the application identified above." Petitioner is advised that, whether a fee is indicated as being due or not, the Issue Fee Transmittal Form **must** be completed and timely submitted to avoid abandonment. Note the language in bold text on the first page of the Notice of Allowance and Fee(s) Due (PTOL-85).

UNITED STATES PATENT AND TRADEMARK OFFICE

Commissioner for Patents
United States Patent and Trademark Office
P.O. Box 1450
Alexandria, VA 22313-1450
www.uspto.gov

BIRCH STEWART KOLASCH & BIRCH
PO BOX 747
FALLS CHURCH, VA 22040-0747

COPY MAILED

DEC 29 2005

OFFICE OF PETITIONS

In re Application of :
Kazuo Hochi :
Application No. 10/321,670 : ON PETITION
Filed: December 18, 2002 :
Attorney Docket No. 1403-0240P :

This is a decision on the petition under 37 CFR 1.181, filed July 18, 2005, to withdraw the holding of abandonment for the above-identified application.

The petition is **GRANTED**.

The above-identified application was held abandoned for failure to reply in a timely manner to the non-final Office action mailed

The above-identified application was held abandoned for failure to reply in a timely manner to the non-final Office action mailed November 29, 2004, which set a shortened statutory period for reply of three (3) months. A Notice of Abandonment was mailed on June 7, 2005.

The petition asserts non-receipt of the November 29, 2004 Office action and requests withdrawal of the holding of abandonment in this application.

The showing required to establish non-receipt of an Office action must include:

1. a statement from the practitioner:

   (A) stating that the Office action was not received by the practitioner;
   (B) attesting, by referencing the docket record in (2) below, that a search of the relevant file jacket and docket records indicates that the Office action was not received; and

2. a copy of the docket record where the allegedly non-receipt Office action would have been entered had it been received.

The petition meets the above requirements and is thus granted.

The holding of abandonment in this application is hereby withdrawn, and the June 7, 2005 Notice of Abandonment vacated.

Telephone inquiries concerning this decision should be directed to Wan Laymon at (571) 272-3220.

This matter is being referred to Technology Center AU 1714 for remailing of the November 29, 2004 non-final Office action.

Frances Hicks
Lead Petitions Examiner
Office of Petitions

UNITED STATES PATENT AND TRADEMARK OFFICE

Commissioner for Patents
United States Patent and Trademark Office
P.O. Box 1450
Alexandria, VA 22313-1450
www.uspto.gov

JUN 07 2004

ALEX RHODES
UNIT NO. 9
50168 PONTIAC TRAIL
WIXOM MI 48393

In re Application of	:	
Joseph J. Berke et al	:	DECISION PETITION
Serial No.: 10/321,684	:	
Filed: December 18, 2002	:	
For: Eye Wash Station	:	

This is in response to applicants' petition filed February 13, 2004, to make the above-identified application special under the provisions of 37 CFR 1.102(c), based on the age of the applicant.

Applicant has satisfied the provisions set forth in M.P.E.P. 708.02, IV. Therefore the petition is **GRANTED**.

The application will be forwarded to the examiner for action on the merits commensurate with this decision.

Should there be any questions with regard to this letter please contact John Kittle by letter addressed to the Director, Technology Center 3700/2900, P.O. Box 1450 Alexandria, VA 22313-1450, or by telephone at (703) 308-0873 or by facsimile transmission at (703) 308-3139.

John E. Kittle
Director,
Technology Center 3700/2900

SPE RESPONSE FOR CERTIFICATE OF CORRECTION

Paper No.: _____

DATE : June 16, 2006

TO SPE OF : ART UNIT 1625 **(S.P.E. Thomas McKenzie)**

SUBJECT : Request for Certificate of Correction for Appl. No.: 10/321,687 Patent No.: 7049320

Please respond to this request for a certificate of correction within 7 days.

Please review the requested changes/corrections as shown in the **COCIN** document(s) in the IFW application image. No new matter should be introduced, nor should the scope or meaning of the claims be changed.

Please complete the response (see below) and forward the completed response to scanning using document code **COCX**.

STAN POWELL

Certificates of Correction Branch

703-308-9390 ext. 120

Thank You For Your Assistance

The request for issuing the above-identified correction(s) is hereby:

Note your decision on the appropriate box.

☒ **Approved**	**All** changes apply.
☐ **Approved in Part**	**Specify below** which changes **do not** apply.
☐ **Denied**	State the reasons for denial below.

Comments: _____

LINDA NORTHINGTON DAVIS
PRIMARY EXAMINER
Art 1625
ACTING SPE

SPE **Art Unit**

UNITED STATES PATENT AND TRADEMARK OFFICE

UNITED STATES DEPARTMENT OF COMMERCE
United States Patent and Trademark Office
Address: COMMISSIONER FOR PATENTS
P.O. Box 1450
Alexandria, Virginia 22313-1450
www.uspto.gov

OPKO Health, Inc.
4400 Biscayne Boulevard
Suite 1180
Miami, FL 33137

Mail Date: 04/21/2010

Applicant	: Sunil Paliwal	: DECISION ON REQUEST FOR
Patent Number	: 7049320	: RECALCULATION of PATENT
Issue Date	: 05/23/2006	: TERM ADJUSTMENT IN VIEW
Appliction No	: 10/321,687	: OF WYETH
Filed	: 12/17/2002	:
		:

The Patentee's Request for Recalculation is **DISMISSED.**

This Request is deemed ineligible for consideration for one or more of the following reasons:

(A). The patent for which PTA recalculation is requested is either a design or reissue application or is a reexamination proceeding;

(B). The patent for which PTA recalculation is requested resulted from a utility or plant application filed under 35 USC 111(a) before May 29, 2000 and no CPA filed in the application on/after May 29, 2000;

(C). The patent for which PTA recalculation is requested resulted from an international application in which the international filing date was before May 29, 2000 and no CPA filed in the application on/after May 29, 2000;

(D). The patent for which PTA recalculation is requested issued on/after March 2, 2010;

(E). The Request for Recalculation was filed more than 180 days after the grant date of the patent and the request was not filed within two months of a dismissal of a request for reconsideration of the of the patent term under 37 CFR 1.705(d);

(F). The Request for Recalculation is not solely limited to USPTO pre-Wyeth interpretation of 35 U.S.C. 154(b)(2)(A);

or

(G). A civil action was filed pursuant to 35 U.S.C. 154(b)(4)(A)concerning the same patent at issue in this request.

Patentee may file a reply to this decision dismissing the Request for Recalculation. Patentee must file such reply within one month or thirty days, whichever is longer, of the mail date of the decision dismissing the Request for Recalculation. No fee is required if patentee is asserting in the reply that the dismissal for ineligibility is improper.

Patentee should use document code PET.OP if electronically filing a reply to this dismissal. If the USPTO finds that the request was improperly deemed ineligible, the USPTO will mail applicant a recalculation determination.

Patentee should be aware that in order to preserve the right to review in the United States District Court for the District of Columbia of the USPTO patent term adjustment determination, patentee must ensure that he or she also take the steps required under 35 U.S.C. 154(b)(4)(A). Nothing in the request for recalculation should be construed as providing an alternative time frame for commencing a civil action under 35 U.S.C. 154 (b)(4)(A).

Any questions concerning this decision should be directed to the Office of Patent Legal Administration at 571-272-7702.

SPE RESPONSE FOR CERTIFICATE OF CORRECTION

DATE : 12/1/04

Paper No.: _____

TO SPE OF : ART UNIT 1625

SUBJECT : Request for Certificate of Correction on Patent No.: 6727261 B2

A response is requested with respect to the accompanying request for a certificate of correction.

Please complete this form and return with file, within **7** days to:
Certificates of Correction Branch - PK 3-915
Palm location **7580** - Tel. No. 305-8309

With respect to the change(s) requested, correcting Office and/or Applicant's errors, should the patent read as shown in the certificate of correction? No new matter should be introduced, nor should the scope or meaning of the claims be changed.

Virginia Tolbert
Certificates of Correction Branch

Thank You For Your Assistance

The request for issuing the above-identified correction(s) is hereby:
Note your decision on the appropriate box.

☒ **Approved**	All changes apply.
☐ **Approved in Part**	Specify below which changes **do not** apply.
☐ **Denied**	State the reasons for denial below.

Comments:

These changes do not introduce any new matter and furthermore, do not change the scope or meaning of claims.

C. S. Auluck
CHARANJIT S. AULAKH
PRIMARY EXAMINER

SPE

1625
Art Unit

UNITED STATES PATENT AND TRADEMARK OFFICE

Commissioner for Patents
United States Patent and Trademark Office
P. O. Box 1450
Alexandria, VA 22313-1450
www.uspto.gov

Paper No. 8

WOODARD EMHARDT NAUGHTON
MORIARTY AND MCNETT LLP
BANK ONE CENTER/TOWER
111 MONUMENT CIRCLE, SUITE 3700
INDIANAPOLIS, IN 46204-5137

COPY MAILED

SEP 0 3 2003

OFFICE OF PETITIONS

In re Application of :
Brian Clinton Kamery et al :
Application No. 10/321,737 : ON PETITION
Filed: December 16, 2002 :
Attorney Docket No. 20202-56 :

This is in response to the petition under 37 CFR 1.47(a), filed August 7, 2003.

The petition is dismissed.

Rule 47 applicant is given TWO MONTHS from the mailing date of this decision to reply, correcting the below-noted deficiencies. Any reply should be entitled "Request for Reconsideration of Petition Under 37 CFR 1.47(a)," and should only address the deficiencies noted below, except that the reply may include an oath or declaration executed by the non-signing inventor. **FAILURE TO RESPOND WILL RESULT IN ABANDONMENT OF THE APPLICATION.** Any extensions of time will be governed by 37 CFR 1.136(a).

A grantable petition under 37 CFR 1.47(a) requires: (1) proof that the non-signing inventor cannot be reached or refuses to sign the oath or declaration after having been presented with the application papers (specification, claims and drawings); (2) an acceptable oath or declaration in compliance with 35 U.S.C. §§ 115 and 116; (3) the petition fee; and (4) a statement of the last known address of the non-signing inventor. Applicant lacks items (1) and (2) set forth above.

As to item (1), rule 47 applicant must demonstrate with documented evidence that an inventor refuses to join in the application after having been presented with the application papers (specification, claims, drawings and oath or declaration). There is no indication in the present case whether joint inventor Ovais Reza was ever presented with a copy of the complete application papers for the instant nonprovisional application. The fact that an application may contain proprietary information does not relieve the 37 CFR 1.47 applicant of the responsibility to present the application papers to the inventor if the inventor is willing to receive the papers. If joint inventor Reza was not presented with a copy of the application papers for the instant

nonprovisional application, then Mr. Reza could not attest that he has "reviewed and understands the application papers" and could not execute the declaration he was requested to sign. While the petition states, "Applicant has been diligent in its efforts to obtain Mr. Reza's signature and has contacted Mr. Reza on numerous occasions to request execution of the Declaration and Power of Attorney. Mr. Reza steadfastly refuses to execute this document" it is unclear whether Mr. Reza was presented with a copy of the complete application papers. Did inventor Reza receive a copy of the application papers? Before a refusal can be alleged, it must be demonstrated that a *bona fide* attempt was made to present a copy of the application papers to the nonsigning inventor for signature. Unless petitioner can show that a copy of the application papers was presented to inventor Reza or that the inventor refused to accept delivery of the papers or expressly stated that the application papers should not be sent, then petitioner will have to mail a copy of the complete application papers (specification, claims and drawings) to inventor Reza's last known address, return receipt requested. A cover letter of instructions should accompany the mailing of the application papers setting a deadline or a statement that no response will constitute a refusal. This sort of ultimatum lends support to a finding of refusal by conduct. **The proof of the pertinent events should be made by a statement of someone with firsthand knowledge of the events and should include documentary evidence, such as certified mail return receipt, cover letter of instructions, telegram, etc.** See MPEP 409.03(d).

The statements of facts must be signed, where at all possible, by a person having firsthand knowledge of the facts recited therein. If the inventor orally refuses to join in the application, that fact along with the time and place of the refusal must be stated in the affidavit or declaration. If, on the other hand, petitioner receives an express written refusal, a copy of the document evidencing that refusal must be made part of the affidavit or declaration.

When it is concluded by the rule 47 petitioner that an omitted inventor's conduct constitutes a refusal, all facts upon which that conclusion is based should be stated in an affidavit or declaration. If there is documentary evidence to support facts alleged in the affidavit or declaration, such evidence must be submitted.

Whenever an omitted inventor gives a reason for refusing to sign the application oath or declaration, that reason should be stated in the affidavit or declaration.

As to item (2), the declaration submitted with the petition is not in compliance with 37 CFR 1.63 and 1.64. The declaration fails to set forth the citizenship of joint inventor Ovais Reza Accordingly, a declaration in compliance with 37 CFR 1.63 and 1.64 is required. Note MPEP 409.03(a); MPEP 602, and MPEP 605.01.

In order to expedite consideration of the petition under 37 CFR 1.47(a), petitioner may wish to submit the renewed petition by facsimile transmission to the telephone number indicated below and to the attention of Irvin Dingle.

Further correspondence with respect to this matter should be addressed as follows:

By mail: Mail Stop PETITION
Commissioner for Patents
Post Office Box 1450
Alexandria, VA 22313-1450

By hand: Crystal Plaza Four, Suite 3C23
2201 S. Clark Place
Arlington, VA 22202

By FAX: (703) 308-6916
ATTN: Office of Petitions

Telephone inquiries related to this decision should be directed to Irvin Dingle at (703) 306-5684.

Frances Hicks
Lead Petitions Examiner
Office of Petitions
Office of the Deputy Commissioner
for Patent Examination Policy

UNITED STATES PATENT AND TRADEMARK OFFICE

COMMISSIONER FOR PATENTS
UNITED STATES PATENT AND TRADEMARK OFFICE
P.O. BOX 1450
ALEXANDRIA, VA 22313-1450
www.uspto.gov

Paper No. 10

WOODARD EMHARDT MORIARTY
MCNETT & HENRY LLP
BANK ONE CENTER/TOWER
111 MONUMENT CIRCLE, SUITE 3700
INDIANAPOLIS, INDIANA 46204-5137

COPY MAILED

NOV 2 6 2003

OFFICE OF PETITIONS

In re Application of :
Brian Clinton Kamery et al :
Application No. 10/321,737 : ON PETITION
Filed: December 16, 2002 :
Attorney Docket No. 20202-56 :

This is in response to the petition under 37 CFR 1.47(a), filed November 6, 2003.

The petition is dismissed.

Rule 47 applicant is given TWO MONTHS from the mailing date of this decision to reply, correcting the below-noted deficiencies. Any reply should be entitled "Request for Reconsideration of Petition Under 37 CFR 1.47(a)," and should only address the deficiencies noted below, except that the reply may include an oath or declaration executed by the non-signing inventor. **FAILURE TO RESPOND WILL RESULT IN ABANDONMENT OF THE APPLICATION.** Any extensions of time will be governed by 37 CFR 1.136(a).

A grantable petition under 37 CFR 1.47(a) requires: (1) proof that the non-signing inventor cannot be reached or refuses to sign the oath or declaration after having been presented with the application papers (specification, claims and drawings); (2) an acceptable oath or declaration in compliance with 35 U.S.C. §§ 115 and 116; (3) the petition fee; and (4) a statement of the last known address of the non-signing inventor. Applicant lacks items (2) set forth above.

As to item (2), the declaration is defective in that it has been amended. In this regard, the citizenship block of Ovais Reza has been amended. Since the declaration cannot be amended, altered or changed, the signature of the signing inventor (Brian Clinton Kamery) is required on the substitute declaration. See MPEP 602.01.

In order to expedite consideration of the petition under 37 CFR 1.47(a), petitioner may wish to submit the renewed petition by facsimile transmission to the telephone number indicated below and to the attention of Irvin Dingle.

Effective December 1, 2003, the Office of Petitions can no longer receive hand-carried correspondence, or facsimile transmissions of correspondence. The centralized location for hand-carried correspondence is the existing Customer Window located at:

2011 South Clark Place
Crystal Plaza 1 Lobby
Room 1B03
Arlington, VA 22202

The centralized facsimile number is **(703) 872-9306.**

Telephone inquiries related to this decision should be directed to Irvin Dingle at (703) 306-5684.

Frances Hicks

Frances Hicks
Lead Petitions Examiner
Office of Petitions
Office of the Deputy Commissioner
for Patent Examination Policy

UNITED STATES PATENT AND TRADEMARK OFFICE

COMMISSIONER FOR PATENTS
UNITED STATES PATENT AND TRADEMARK OFFICE
P.O. BOX 1450
ALEXANDRIA, VA 22313-1450
www.uspto.gov

Paper No. 15

WOODARD EMHARDT MORIARTY
MCNETT & HENRY LLP
BANK ONE CENTER/TOWER
111 MONUMENT CIRCLE, SUITE 3700
INDIANAPOLIS, INDIANA 46204-5137

COPY MAILED

MAY 2 1 2004

OFFICE OF PETITIONS

In re Application of :
Brian Clinton Kamery et al. :
Application No. 10/321,737 :
Filed: December 16, 2002 :
Attorney Docket No. 20202-56 :

DECISION NOTING JOINDER OF INVENTORS AND PETITION UNDER 37 CFR 1.47 (a) MOOT

Papers filed on January 29, 2004 in response to a "Decision Refusing Status Under 37 CFR 1.47 (a)," mailed November 26, 2003, included a Declaration signed by previously nonsigning inventor Ovais Reza in compliance with 37 CFR 1.63.

In view of the joinder of the inventor, further consideration under 37 CFR 1.47 (a) is moot; this application does not have any rule 1.47 (a) status and no such status should appear on the file wrapper. This application need not be returned to this office for any further consideration under 37 CFR 1.47 (a).

This application is being forwarded to the Initial Patent Examination Unit.

Telephone inquiries related to this decision should be directed to Irvin Dingle at (703) 306-5684.

Frances Hicks
Lead Petitions Examiner
Office of Petitions
Office of the Deputy Commissioner
for Patent Examination Policy

UNITED STATES PATENT AND TRADEMARK OFFICE

Commissioner for Patents
United States Patent and Trademark Office
P.O. Box 1450
Alexandria, VA 22313-1450
www.uspto.gov

WOODARD, EMHARDT, NAUGHTON,
MORIARTY AND MCNETT LLP
BANK ONE CENTER/TOWER
111 MONUMENT CIRCLE, SUITE 3700
INDIANAPOLIS IN 46204-5137

COPY MAILED

AUG 0 1 2007

OFFICE OF PETITIONS

In re Application of :
KAMERY, Brian C. et al. :
Application No. 10/321,737 : DECISION ON PETITION
Filed: December 16, 2002 : TO WITHDRAW
Attorney Docket No. **20202-56** : FROM RECORD
:

This is a decision on the Request to Withdraw as attorney or agent of record under 37 C.F.R. § 1.36(b), filed June 20, 2007.

The request is **APPROVED**.

A grantable request to withdraw as attorney/agent of record must be signed by every attorney/agent seeking to withdraw or contain a clear indication that one attorney is signing on behalf of another/others. A request to withdraw will not be approved unless at least 30 (thirty) days would remain between the date of approval and the later of the expiration date of a time to file a response or the expiration date of the maximum time period which can be extended under 37 C.F.R. § 1.136(a).

The request was signed by Troy J. Cole on behalf of all attorneys of record. All attorneys/agents associated have been withdrawn. Applicant is reminded that there is no attorney of record at this time.

The request to change the correspondence of record is not acceptable as the requested correspondence address is not that of: (1) the first named signing inventor; or (2) an intervening assignee of the entire interest under 37 C.F.R 3.71. All future communications from the Office will be directed to the first named signing inventor.

There is an outstanding Office action mailed May 15, 2007 that requires a reply from the applicant.

Telephone inquiries concerning this decision should be directed to Michelle R. Eason at 571-272-4231.

Terri Williams
Petitions Examiner
Office of Petitions

cc: **BRIAN C. KAMERY**
3419 LETHBRIDGE
PEARLAND, TX 77581

cc: **WONG, CABELLO, LUTSCH,**
RUTHERFORD & BRUCCULERI LLP
20333 SH 249
SUITE 600
HOUSTON, TX 77070

UNITED STATES PATENT AND TRADEMARK OFFICE

UNITED STATES DEPARTMENT OF COMMERCE
United States Patent and Trademark Office
Address: COMMISSIONER FOR PATENTS
P.O. Box 1450
Alexandria, Virginia 22313-1450
www.uspto.gov

APPLICATION NUMBER	FILING OR 371 (c) DATE	FIRST NAMED APPLICANT	ATTY. DOCKET NO./TITLE
10/321,737	12/16/2002	Brian Clinton Kamery	20202-56

CONFIRMATION NO. 4265

OC000000025066127

Woodard, Emhardt, Naughton,
Moriarty and McNett LLP
Bank One Center/Tower
111 Monument Circle, Suite 3700
Indianapolis, IN 46204-5137

Date Mailed: 07/27/2007

NOTICE REGARDING CHANGE OF POWER OF ATTORNEY

This is in response to the Power of Attorney filed 06/20/2007.

- The withdrawal as attorney in this application has been accepted. Future correspondence will be mailed to the new address of record. 37 CFR 1.33.

Michelle R. Eason

Office of Initial Patent Examination (571) 272-4000, or 1-800-PTO-9199
FORMER ATTORNEY/AGENT COPY

UNITED STATES PATENT AND TRADEMARK OFFICE

COMMISSIONER FOR PATENTS
UNITED STATES PATENT AND TRADEMARK OFFICE
P.O. BOX 1450
ALEXANDRIA, VA 22313-1450
WWW.USPTO.GOV

Paper No.

WOODARD EMHARDT NAUGHTON
MORIARTY AND McNETT
BANK ONE CENTER/TOWER
111 MONUMENT CIRCLE, SUITE 3700
INDIANAPOLIS, IN 46204-5137

COPY MAILED

AUG 2 2 2003

OFFICE OF PETITIONS

In re Application of :
Timothy E. Cooper et al :
Application No. 10/321,743 : NOTICE
Filed: December 16, 2002 :
Attorney Docket No. 20206-20 :

This is a notice regarding your request for acceptance of a fee deficiency submission under 37 CFR 1.28. On September 1, 1998, the Court of Appeals for the Federal Circuit held that 37 CFR 1.28(c) is the sole provision governing the time for correction of the erroneous payment of the issue fee as a small entity. **See DH Technology v. Synergystex International, Inc. 154 F.3d 1333, 47 USPQ2d 1865 (Fed. Cir. Sept. 1, 1998).**

The Office no longer investigates or rejects original or reissue applications under 37 CFR 1.56. **1098 Off. Gaz. Pat. Office 502 (January 3, 1989).** Therefore, nothing in this Notice is intended to imply that an investigation was done.

Your fee deficiency submission under 37 CFR 1.28 is hereby **ACCEPTED.**

Inquiries related to this communication should be directed to the Office of Petitions Staff at (703) 305-9285.

Wan Laymon
Petitions Examiner
Office of Petitions
Office of the Deputy Commissioner
for Patent Examination Policy

SPE RESPONSE FOR CERTIFICATE OF CORRECTION

Paper No.:20070625

DATE : June 25, 2007

TO SPE OF : ART UNIT 3753

SUBJECT : Request for Certificate of Correction on Patent No.: 6,997,202

A response is requested with respect to the accompanying request for a certificate of correction.

Please complete this form and return with file, within **7** days to:
Certificates of Correction Branch - PK 3-910
Palm location **7590** - Tel. No. 305-8201

With respect to the change(s) requested, correcting Office and/or Applicant's errors, should the patent read as shown in the certificate of correction? No new matter should be introduced, nor should the scope or meaning of the claims be changed.

Thank You For Your Assistance **Certificates of Correction Branch**

The request for issuing the above-identified correction(s) is hereby:
Note your decision on the appropriate box.

☒ **Approved** **All** changes apply.

☐ **Approved in Part** Specify below which changes **do not** apply.

☐ **Denied** State the reasons for denial below.

Comments:

The patent issued with the wrong claim 25 (renumbered from prosecuted claim 24 at allowance). This is an office error; so there are no charges to Patent Owner.

Eric Keasel

SPE: Eric Keasel **Art Unit** 3753

UNITED STATES PATENT AND TRADEMARK OFFICE

Commissioner for Patents
United States Patent and Trademark Office
P.O. Box 1450
Alexandria, VA 22313-1450
www.uspto.gov

William M. Lee, Jr.
Lee, Mann, Smith, McWilliams,
Barnes & Thornburg
P.O. Box 2786
Chicago IL 60690-2786

COPY MAILED

OCT 12 2007

OFFICE OF PETITIONS

In re Application of :
Naden, et al. :
Application No. 10/321,766 : ON PETITION
Filed: December 17, 2002 :
Attorney Docket No. 920476-905074 :
For: COMMUNICATION NETWORK
ROUTE DETERMINATION

This is a decision on the petition, filed July 6, 2007, under 37 CFR 1.137(b) to revive the above-identified application.

The petition is **GRANTED**.

The above-identified application became abandoned for failure to timely submit a reply within three (3) months of the mailing of the December 26, 2006 non-final Office action. No response being received and no extensions of time being obtained under the provisions of 37 CFR 1.136(a), this application became abandoned on March 27, 2007.

Applicants have submitted an amendment in reply to the December 26, 2006 non-final Office action, a proper statement of the unintentional nature of the delay in responding to the December 26, 2006 non-final Office action, and the $1,500.00 petition fee.

All of the requirements under 37 CFR 1.137(b) being met, the petition is granted.

After the mailing of this decision, the application will be returned to Technology Center AU 2616 for consideration of the amendment filed on July 6, 2007.

Telephone inquiries should be directed to the undersigned at (571) 272-3230.

Shirene Willis Brantley
Senior Petitions Attorney
Office of Petitions

UNITED STATES PATENT AND TRADEMARK OFFICE

Commissioner for Patents
United States Patent and Trademark Office
P.O. Box 1450
Alexandria, VA 22313-1450
www.uspto.gov

BLAKELY SOKOLOFF TAYLOR & ZAFMAN
12400 WILSHIRE BOULEVARD
SEVENTH FLOOR
LOS ANGELES, CA 90025-1030

COPY MAILED

SEP 0 1 2004

OFFICE OF PETITIONS

In re Application of :
Robert W. Fransdonk :
Application No. 10/321,767 : NOTICE
Filed: December 16, 2002 :
Attorney Docket No. 5782P001C4 :

This is a notice regarding your request for acceptance of a fee deficiency submission under 37 CFR 1.28. On September 1, 1998, the Court of Appeals for the Federal Circuit held that 37 CFR 1.28(c) is the sole provision governing the time for correction of the erroneous payment of the issue fee as a small entity. **See DH Technology v. Synergystex International, Inc. 154 F.3d 1333, 47 USPQ2d 1865 (Fed. Cir. Sept. 1, 1998).**

The Office no longer investigates or rejects original or reissue applications under 37 CFR 1.56. **1098 Off. Gaz. Pat. Office 502 (January 3, 1989).** Therefore, nothing in this Notice is intended to imply that an investigation was done.

Your fee deficiency submission under 37 CFR 1.28 is hereby **ACCEPTED.**

Inquiries related to this communication should be directed to the Office of Petitions Staff at (703) 305-9285.

This matter is being referred to Technology Center AU 2131.

Wan Laymon
Petitions Examiner
Office of Petitions
Office of the Deputy Commissioner
for Patent Examination Policy

BEST AVAILABLE COPY

UNITED STATES PATENT AND TRADEMARK OFFICE

Commissioner for Patents
United States Patent and Trademark Office
P. O. Box 1450
Alexandria, VA 22313-1450
www. uspto. gov

SCHWEGMAN LUNDBERG WOESSNER & KLUTH, P.A.
P.O. BOX 2938
MINNEAPOLIS, MN 55402-0938

COPY MAILED

APR 2 8 2005

OFFICE OF PETITIONS

In re Application of :
Robert W. Fransdonk :
Application No. 10/321,767 :
Filed: December 16, 2002 :
Attorney Docket No. 5782P001C4

ON PETITION

This is a decision on the petition, filed April 27, 2005, under 37 CFR 1.313(c)(2) to withdraw the above-identified application from issue after payment of the issue fee.

The petition is **GRANTED**.

The above-identified application is withdrawn from issue for consideration of a submission under 37 CFR 1.114 (request for continued examination). See 37 CFR 1.313(c)(2).

Petitioner is advised that the issue fee paid on February 14, 2005 in the above-identified application cannot be refunded. If, however, the above-identified application is again allowed, petitioner may request that it be applied towards the issue fee required by the new Notice of Allowance.[1]

Telephone inquiries should be directed to Irvin Dingle at (571) 272-3210.

This matter is being referred to Technology Center AU 2131 for processing of the request for continued examination under 37 CFR 1.114 and for consideration of the concurrently filed Information Disclosure Statement.

Irvin Dingle
Petitions Examiner
Office of Petitions
Office of the Deputy Commissioner
for Patent Examination Policy

[1] The request to apply the issue fee to the new Notice may be satisfied by completing and returning the new Issue Fee Transmittal Form PTOL-85(b), which includes the following language thereon: Commissioner for Patents is requested to apply the Issue Fee and Publication Fee (if any) or re-apply any previously paid issue fee to the application identified above. Petitioner is advised that, whether a fee is indicated as being due or not, the Issue Fee Transmittal Form **must** be completed and timely submitted to avoid abandonment. Note the language in bold text on the first page of the Notice of Allowance and Fee(s) Due (PTOL-85).

2059.001USS

Commissioner for Patents
United States Patent and Trademark Office
P.O. Box 1450
Alexandria, VA 22313-1450
www.uspto.gov

OIPE JC37 JUN 02 2005 PATENT & TRADEMARK OFFICE

SCHWEGMAN LUNDBERG WOESSNER & KLUTH, P.A.
P.O. BOX 2938
MINNEAPOLIS, MN 55402-0938

COPY MAILED
APR 28 2005
OFFICE OF PETITIONS
ON PETITION
COPY

In re Application of
Robert W. Fransdonk
Application No. 10/321,767
Filed: December 16, 2002
Attorney Docket No. 5782P001C4

This is a decision on the petition, filed April 27, 2005, under 37 CFR 1.313(c)(2) to withdraw the above-identified application from issue after payment of the issue fee.

The petition is **GRANTED**.

The above-identified application is withdrawn from issue for consideration of a submission under 37 CFR 1.114 (request for continued examination). See 37 CFR 1.313(c)(2).

Petitioner is advised that the issue fee paid on February 14, 2005 in the above-identified application cannot be refunded. If, however, the above-identified application is again allowed, petitioner may request that it be applied towards the issue fee required by the new Notice of Allowance.[1]

Telephone inquiries should be directed to Irvin Dingle at (571) 272-3210.

This matter is being referred to Technology Center AU 2131 for processing of the request for continued examination under 37 CFR 1.114 and for consideration of the concurrently filed Information Disclosure Statement.

Irvin Dingle
Petitions Examiner
Office of Petitions
Office of the Deputy Commissioner
for Patent Examination Policy

[1] The request to apply the issue fee to the new Notice may be satisfied by completing and returning the new Issue Fee Transmittal Form PTOL-85(b), which includes the following language thereon: Commissioner for Patents is requested to apply the Issue Fee and Publication Fee (if any) or re-apply any previously paid issue fee to the application identified above. Petitioner is advised that, whether a fee is indicated as being due or not, the Issue Fee Transmittal Form must be completed and timely submitted to avoid abandonment. Note the language in bold text on the first page of the Notice of Allowance and Fee(s) Due (PTOL-85).

DOPT

PORTFOLIO I.P.
MAY 2 2005
RECEIVED

SPE RESPONSE FOR CERTIFICATE OF CORRECTION

Paper No.: _____

DATE : Feb. 8, 2006

TO SPE OF : ART UNIT 2131 (Ayaz Sheikh)

SUBJECT : Request for Certificate of Correction on Patent No.: 6,961,858

A response is requested with respect to the accompanying request for a certificate of correction.

Please complete this form and return with file, within **7** days to:
Palm location **7580, Certificates of Correction Branch – South Tower – 9A22**
If response is for an IFW, **return to employee (named below) via PUBSCofC Team in MADRAS.**
With respect to the change(s) requested, correcting Office and/or Applicant's errors, should the patent read as shown in the certificate of correction (COCIN)? No new matter should be introduced, nor should the scope or meaning of the claims be changed.
Please see the claims - Col. 44 – 48. Your denial or approval decision is needed below.

sp STACY POWELL

Thank You For Your Assistance

Certificates of Correction Branch
Tel. No. 703-308-9390 x120

The request for issuing the above-identified correction(s) is hereby:
Note your decision on the appropriate box.

- ☑ **Approved** — **All** changes apply.
- ☐ **Approved in Part** — Specify below which changes **do not** apply.
- ☐ **Denied** — State the reasons for denial below.

Comments:

not changing the scope of the claims

AYAZ SHEIKH
~~SUPERVISORY PATENT EXAMINER~~
SPE
TECHNOLOGY CENTER 2100

2131
Art Unit

UNITED STATES PATENT AND TRADEMARK OFFICE

Commissioner for Patents
United States Patent and Trademark Office
P.O. Box 1450
Alexandria, VA 22313-1450
www.uspto.gov

Karen Canaan
Mintz, Levin, Cohn, Ferris,
Glovsky and Popeo, PC
1400 Page Mill Road
Palo Alto, CA 94304-1124

COPY MAILED

APR 12 2007

OFFICE OF PETITIONS

In re Application of :

Kamal Midha :
Application No. 10/321,778 : DECISION ON PETITION
Filed: December 16, 2002 : TO WITHDRAW
Attorney Docket No. 7450-0001/20 : FROM RECORD

This is a decision on the Request to Withdraw as attorney or agent of record under 37 C.F.R. § 1.36(b), filed February 13, 2007.

The request is **NOT APPROVED**.

A grantable request to withdraw as attorney/agent of record must be signed by every attorney/agent seeking to withdraw or contain a clear indication that one attorney is signing on behalf of another/others. A request to withdraw will not be approved unless at least 30 (thirty) days would remain between the date of approval and the later of the expiration date of a time to file a response or the expiration date of the maximum time period which can be extended under 37 C.F.R. § 1.136(a).

The request cannot be approved because no reasons for withdrawal have been provided. The Office cannot, at this time, determine whether practitioner's request is one of the mandatory or permissive reasons enumerated in 37 CFR 10.40. Any subsequent requests must include reasons for withdrawal. Please note that there is a space provided for on PTO/SB/83 (Request to Withdraw as Attorney or Agent) to supply practitioner's reasons.

A courtesy copy of this decision is being mailed to applicant at the address noted in the Declaration for Patent Application, as well as to the address noted in the request.

All future communications from the Office will continue to be directed to the above-listed address until otherwise notified by applicant.

Telephone inquiries concerning this decision should be directed to Kimberly Inabinet at 571-272- 4618.

Frances Hicks
Petitions Examiner
Office of Petitions

cc: Kamal K. Midha
195 South Shore Road, Paget
Hamilton, Bermuda

cc: Mr. Rod L. Thiessen
Investment & Retirement Planning, Inc.
119 4th Avenue South, Suite 202
Saskatoon, SK S7K 5X2

UNITED STATES PATENT AND TRADEMARK OFFICE

COMMISSIONER FOR PATENTS
UNITED STATES PATENT AND TRADEMARK OFFICE
P.O. BOX 1450
ALEXANDRIA, VA 22313-1450
www.uspto.gov

FISH & RICHARDSON P.C.
P.O. BOX 1022
MINNEAPOLIS MN 55440-1022

COPY MAILED

SEP 12 2005

OFFICE OF PETITIONS

Applicant: Varadarajan
Appl. No.: 10/321,788
Filing Date: December 17, 2002
Title: CONCEPT NAVIGATION IN DATA STORAGE SYSTEMS
Attorney Docket No.: 14012-033001/50-02-041
Pub. No.: US 2004/0117341 A1
Pub. Date: July 17, 2004

This is a decision on the request for a corrected patent application publication under 37 CFR 1.221(b), filed on August 13, 2004, for the above-identified application.

The request is granted.

The corrected patent application publication will be published in due course, unless the patent issues before the application is republished.

Inquiries relating to this matter may be directed to Mark Polutta at (571) 272-7709 (voice).

Mark O. Polutta
Office of Patent Legal Administration
Office of the Deputy Commissioner
for Patent Examination Policy

UNITED STATES PATENT AND TRADEMARK OFFICE

COMMISSIONER FOR PATENTS
UNITED STATES PATENT AND TRADEMARK OFFICE
P.O. BOX 1450
ALEXANDRIA, VA 22313-1450
www.uspto.gov

COZEN O'CONNOR, P.C.
1900 MARKET STREET
PHILADELPHIA PA 19103-3508

COPY MAILED

APR 0 1 2004

OFFICE OF PETITIONS

In re Application of
Chen
Application No. 10/321,807
Filed: December 16, 2002
For: ENDOGENOUS AND NON-ENDOGENOUS VERSIONS OF HUMAN G PROTEIN-COUPLED RECEPTORS
Attorney Docket No: 12.US24.CON
Pub. No.: US 2003/012661148 A1
Pub. Date: September 4, 2003

This is a decision on the request for corrected patent application publication under 37 CFR 1.221(b), filed on October 30, 2003 for the above-identified application.

The request is granted-in-part.

The corrected patent application publication will be published in due course and will only include corrections for errors made by the Office.

A patent application publication is based on the application papers as originally filed, according to 37 CFR 1.215(a), which says the following, in part:

> (a) . . . The patent application publication will be based upon the application papers deposited on the filing date of the application, as well as the executed oath or declaration submitted to complete the application . . . The patent application publication will not include any amendments, including preliminary amendments, unless applicant supplies a copy of the application containing the amendment pursuant to paragraph (c) of this section.

37 CFR 1.221(b) is applicable "only when the Office makes a material mistake which is apparent from Office records." A material mistake must affect the public's ability to appreciate the technical disclosure of the patent application publication, to determine the scope of the patent application publication, or to determine the scope of the provisional rights that an applicant may seek to enforce upon issuance of a patent.[1] The instant request also includes mistakes that are not the fault of the Office, which will not be corrected by a corrected publication made by the Office.

The errors mentioned below will not be corrected as requested by applicant. The following errors mentioned by applicant will not be corrected, as they are not apparent from the Office record:

The request for underling in the sequence listings (Errors 7, 8, 11-14 and 17) **will not** be changed as it is not apparent from the Office record that the underling was part of the application. The underling was done by hand and are uninitiated alterations of the application.

---

[1] Changes to Implement Eighteen-Month Publication of Patent Applications, 65 FR 57023, 57038 (Sept. 20, 2000), 1239 Off. Gaz. Pat. Office Notices 63, 75 (Oct. 10, 2000) (final rule).

The applicant is advised that a "request for republication of an application previously published" may be filed under 37 CFR 1.221(a). Such a request for republication "must include a copy of the application in compliance with the Office's electronic filing system requirements and be accompanied by the publication fee set forth in § 1.18(d) and the processing fee set forth in § 1.17(i)." If the request for republication does not comply with the electronic filing system requirements, the republication will not take place and the publication fee set forth in § 1.18(d) will be refunded. The processing fee will be retained.

Any request for republication under 37 CFR 1.221(a), should be submitted via the EFS system and any question or request for reconsideration of this decision, should be addressed as follows:

By mail to: Mail Stop PGPUB
Commissioner for Patents
P.O. Box 1450
Alexandria, VA 22313-1450

Inquiries relating to this matter may be directed to Mark Polutta at (703) 308-8122 (voice) or (703) 746-3465 (facsimile).

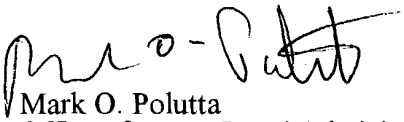

Mark O. Polutta
Office of Patent Legal Administration
Office of the Deputy Commissioner
for Patent Examination Policy

UNITED STATES PATENT AND TRADEMARK OFFICE

COMMISSIONER FOR PATENTS
UNITED STATES PATENT AND TRADEMARK OFFICE
P.O. BOX 1450
ALEXANDRIA, VA 22313-1450
www.uspto.gov

COZEN O'CONNOR, P.C.
1900 MARKET STREET
PHILADELPHIA PA 19103-3508

COPY MAILED

SEP 07 2004

OFFICE OF PETITIONS

In re Application of :
Chen et al :
Application No. 10/321,807 : Decision on Petition
Filed: December 16, 2002 :
For: ENDOGENOUS AND NON- :
ENDOGENOUS VERSIONS OF HUMAN :
G PROTEIN-COUPLED RECEPTORS :
Pub No. US 2003/01266148 A1 :
Pub. Date September 4, 2003 :
Pub. No.: US 2004/0137563 A9 :
Pub. Date: July 15, 2004 :

The above-identified application has been forwarded to the undersigned for consideration on the paper requesting reconsideration on decision for the request for corrected publication under 37 CFR 1.221(b) mailed on April 1, 2004, which is being treated as a petition under 37 C.F.R. 1.181, filed on June 21, 2004. Petitioner requests that the corrected publication include the underling that was present in the application as filed.

The petition under 37 CFR 1.181 is dismissed.

Petitioner argues that the corrected publication request was improperly granted-in-part and that it should include the underlined portions of the specification. Petitioner argues that the corrected publication should include the underling that was present in the application as filed, as the underlining was not done by hand, thus it is not an uninitialed alteration of the specification. Petitioner argues that the printed copy of the application which was filed in the Office and the electronic copy of the application have been checked and that the underling is present in the electronic copy of the application in their files.

37 CFR 1.221(b) is applicable "only when the Office makes a material mistake which is apparent from Office records." It is not apparent from the Office records that the underling in the sequence listings (at Errors 7, 8, 11-14 and 17 in the corrected publication request filed on October 30, 2003) were not done by hand. The underling at these locations appears to have been done by hand because the underling at a single location in the specification, i.e. a

single line has different thicknesses and angles. Thus, the underling in the sequence listings appear to be uninitiated alterations of the application, which will not be corrected as it is not apparent from the Office record that the underling was not done by hand.

The petition filed on June 21, 2004, requesting reconsideration of the decision on the request for corrected publication was not timely filed under 37 CFR 1.181(f), as it was received more than two months after the mailing of decision for which relief is requested. 37 CFR 1.181(f) requires a petition to be filed within two months of the action or notice from which relief is requested. The decision on the corrected publication request was mailed on April 1, 2004, therefore, the petition was not timely filed. Additionally, the application was scheduled for republication on July 15, 2004, and was published as US 2004/0137563 A2 on July 15, 2004, thus the petition was received too late to consider.

The rules and statutory provisions governing the operations of the U.S. Patent and Trademark Office require payment of a fee on filing each petition. See 35 U.S.C. § 41(a)(7). The $130 petition fee will be charged to Petitioner's deposit account 50-1441, as authorized.

The application will be examined in due course.

Inquiries relating to this matter may be directed to Mark Polutta at (703) 308-8122 (voice).

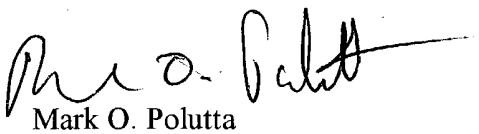

Mark O. Polutta
Senior Legal Advisor
Office of Patent Legal Administration
Office of the Deputy Commissioner
for Patent Examination Policy

UNITED STATES
PATENT AND
TRADEMARK OFFICE

UNDER SECRETARY OF COMMERCE FOR INTELLECTUAL PROPERTY
AND DIRECTOR OF THE UNITED STATES PATENT AND TRADEMARK OFFICE
WASHINGTON, D.C. 20231
WWW.USPTO.GOV

#1

MAY 2003

In re Application of	:	
Leenhouts et al	:	
Serial No.: 10/321,857	:	PETITION DECISION
Filed: December 16, 2002	:	
Attorney Docket No.: 2183-5547US	:	

This is in response to applicant's Petition To Make Special under 37 CFR § 1.102, filed December 16, 2002, based upon special status under MPEP § 708.02 XII.

Based on the statements and evidence provided it is concluded the application meets the requirements for special status under MPEP § 708.02(XII). Petition is granted. Prosecution will proceed according to procedure set forth in MPEP 708.02, there is no provision for "withdrawal" from this special status.

Applicant's petition is **GRANTED**.

Should there be any questions regarding this decision, please contact Cecilia Tsang by mail addressed to Director, Technology Center 1600, Washington, D.C. 20231, or by telephone at (703) 308-0254 or by facsimile transmission at (703) 305-7230.

Cecilia Tsang for
Jasemine Chambers
Director, Technology Center 1600

Andrew F. Nilles
TRASKBRITT
P.O.Box 2550
Salt Lake City, Utah 84110-2550

UNITED STATES PATENT AND TRADEMARK OFFICE

Commissioner for Patents
United States Patent and Trademark Office
P.O. Box 1450

www.uspto.gov

CHRISTENSEN, O'CONNOR, JOHNSON,
KINDNESS, PLLC
1420 FIFTH AVENUE
SUITE 2800
SEATTLE, WA 98101-2347

COPY MAILED

SEP 3 0 2009

OFFICE OF PETITIONS

In re Application of :
Jeremy A. ROBKIN, et al :
Application No. 10/321,866 : ON PETITION
Filed: December 17, 2002 :
Attorney Docket No. EXPE119348 :

This is a decision on the petition under the unintentional provisions of 37 CFR 1.137(b), filed May 21, 2009, to revive the above-identified application.

The petition is **GRANTED**.

The application became abandoned for failure to timely file a reply within the meaning of 37 CFR 1.113 to the final Office action of November 17, 2008. The proposed reply required for consideration of a petition to revive must be a Notice of Appeal (and appeal fee required by 37 CFR 41.20(b)(2), an amendment that *prima facie* places the application in condition for allowance, a Request for Continued Examination and submission (37 CFR 1.114), or the filing of a continuing application under 37 CFR 1.53(b). See MPEP 711.03(c)(II)(A)(2). No extensions of time pursuant to the provisions of 37 CFR 1.136(a) were obtained. Accordingly, the date of abandonment of this application is February 18, 2009.

The petition satisfies the requirements of 37 CFR 1.137(b) in that petitioner has supplied (1) the reply in the form of a Request for Continued Examination (RCE) and fee of $810, and the submission required by 37 CFR 1.114; (2) the petition fee of $1620; and (3) the required statement of unintentional delay have been received.

There is no indication that the person signing the petition was ever given a power of attorney to prosecute the application. If the person signing the petition desires to receive future correspondence regarding this application, the appropriate power of attorney document must be submitted.

Telephone inquiries concerning this decision should be directed to Diane Goodwyn at (571) 272-6735.

This application is being referred to Technology Center AU 2176 for processing of the RCE and for appropriate action by the Examiner in the normal course of business.

Thurman K. Page
Petitions Examiner
Office of Petitions

UNITED STATES PATENT AND TRADEMARK OFFICE

COMMISSIONER FOR PATENTS
UNITED STATES PATENT AND TRADEMARK OFFICE
P.O. BOX 1450
ALEXANDRIA, VA 22313-1450
WWW.USPTO.GOV

Paper No.

Kermit D. Lopez / Luis M. Ortiz
Ortiz & Lopez, PLLC
Patent Attorneys
P.O. Box 4484
Alburquerque NM 87196-4484

COPY MAILED

FEB 0 4 2008

OFFICE OF PETITIONS

In re Application of	:	
Luis Melisendro Ortiz et al.	:	
Application No. 10/321,872	:	DECISION ON RENEWED
Filed: December 17, 2002	:	PETITION PURSUANT TO
Attorney Docket No.: 1000-1332	:	37 C.F.R. § 1.137(A)
Title: RANDOM BIOMETRIC	:	
AUTHENTICATION UTILIZING UNIQUE	:	
BIOMETRIC SIGNATURES	:	

This is a decision on the renewed petition pursuant to 37 C.F.R. § 1.137(a)[1], filed on January 14, 2008, to revive the above-identified application.

This renewed petition is **GRANTED**.

---

1 A grantable petition pursuant to 37 C.F.R. § 1.137(a) must be accompanied by:

(1) the required reply (in a nonprovisional application abandoned for failure to prosecute, the required reply may be met by the filing of a continuing application; in an application or patent, abandoned or lapsed for failure to pay the issue fee or any portion thereof, the required reply must be the payment of the issue fee or any outstanding balance thereof);

(2) the petition fee;

(3) a showing to the satisfaction of the Commissioner that the entire delay in filing the required reply from the due date for the reply until the filing of a grantable petition pursuant to this paragraph was unavoidable, and;

(4) a terminal disclaimer (and fee as set forth in § 1.20(d)) required pursuant to paragraph (d) of this section.

The Change of Correspondence Address has been entered and made of record.

The above-identified application became abandoned for failure to reply in a timely manner to the non-final Office action, mailed May 16, 2006, which set a shortened statutory period for reply of three months. No response was received, and no extensions of time under the provisions of 37 C.F.R. § 1.136(a) were requested. Accordingly, the above-identified application became abandoned on August 17, 2006. A notice of abandonment was mailed on April 3, 2007.

An original petition was filed on September 25, 2007, which was dismissed via the mailing of a decision on November 14, 2007 for failure to establish that the entire period of delay was unavoidable.

With this renewed petition, Petitioner has established that a "Request for Change of Correspondence Address" was submitted to the Office via facsimile transmission on June 6, 2003[2], however the submission was not properly entered by the Office, and as such, the non-final rejection was not responded to.

The Technology Center will be notified of this decision. The Technology Center's support staff will notify the Examiner of this decision, so that the amendment that was received on September 25 2007 (with the original petition) can be processed.

Telephone inquiries regarding *this decision* should be directed to the undersigned at (571) 272-3225[3]. All other inquiries concerning examination procedures or status of the application should be directed to the Technology Center.

/Paul Shanoski/
Paul Shanoski
Senior Attorney
Office of Petitions

---

2 It is noted that June 6, 2003 predates the present requirement for the centralized location for receiving facsimile transmissions.
3 Petitioner will note that all practice before the Office should be in writing, and the action of the Office will be based exclusively on the written record in the Office. See 37 C.F.R. § 1.2. As such, Petitioner is reminded that no telephone discussion may be controlling or considered authority for any further action(s) of Petitioner.

RECEIVED
CENTRAL FAX CENTER

SEP 18 2006

UNITED STATES PATENT AND TRADEMARK OFFICE

Commissioner for Patents
United States Patent and Trademark Office
P.O. Box 1450
Alexandria, VA 22313-1450
www.uspto.gov

JAN 13 2006

In re Application of BARTASEVICH ET AL.
Appl. No.: 10/321,882
Filed: December 17, 2002
For: LIGHTWEIGHT SHIPPING CONTAINER

WITHDRAWAL FROM ISSUE
37 CFR 1.313

The purpose of this communication is to inform you that the above identified application is being withdrawn from issue pursuant to 37 CFR 1.313.

The application is being withdrawn to permit reopening of prosecution. The reasons therefor will be communicated to you by the examiner.

U.S. Patent and Trademark Office records reveal that the issue fee and the publication fee have not been paid. If the issue fee and the publication fee have been submitted, the applicant may request a refund, or may request that the fee be credited to a deposit account. However, applicant may wait until the application is either again found allowable or held abandoned. If the application is allowed, upon receipt of a new Notice of Allowance and Fees Due, applicant may request that the previously submitted issue fee and publication fee be applied toward payment of the issue fee and publication fee in the amount identified on the new Notice of Allowance and Issue and Publication Fee Due. If the application is abandoned, applicant may request either a refund or a credit to a specified Deposit Account.

The application is being forwarded to the examiner for action.

Frederick Schmidt
Director
Patent Examining Technology Center 3700

John H Thomas
536 Gramite Avenue
Richmond, VA 23226

UNITED STATES PATENT AND TRADEMARK OFFICE

Commissioner for Patents
United States Patent and Trademark Office
P.O. Box 1450
Alexandria, VA 22313-1450
www.uspto.gov

NIXON PEABODY LLP
161 N CLARK ST.
48TH FLOOR
CHICAGO IL 60601-3213

COPY MAILED

JUL 18 2007

OFFICE OF PETITIONS

In re Application of	:	
Loose et al.	:	
Application No. 10/321896	:	DECISION
Filing or 371(c) Date: 12/17/2002	:	ON PETITION
Patent No.: 7160187	:	
Issue Date: 01/09/2007	:	
Attorney Docket Number: 47079-00093USC1	:	

This is a decision on the correspondence entitled "Request for Certificate of Correction of Patent for Applicant's Mistake (37 C.F.R. § 1.322(a)," filed May 8, 2007, to correct the name of the assignee on the front page of the above-identified patent by way of a Certificate of Correction. The request is properly treated as a petition under 37 CFR 3.81(b)[1].

The Petition is **granted**.

The petition was accompanied by a certificate of correction as required by 3.81(b), and the fee was submitted March 16, 2007. Further, Office assignment records reflect that WMS Gaming Inc., is the assignee of record. As the request complies with the provisions of 37 CFR 3.81(b), it would be appropriate for a certificate of correction to be processed after issuance of this application into a patent.

Telephone inquiries concerning this matter should be directed to the undersigned at (571) 272-3232. Any questions concerning the issuance of the Certificate of Correction should be directed to the Certificate of Correction Branch at (571) 272-4200.

This matter is being referred to the Certificates of Correction Branch for processing of a certificate of correction after issuance of this application into a patent.

Derek L. Woods
Attorney
Office of Petitions

[1] *See* MPEP 1309, subsection II; and Official Gazette of June 22, 2004.

UNITED STATES PATENT AND TRADEMARK OFFICE

Commissioner for Patents
United States Patent and Trademark Office
P.O. Box 1450
Alexandria, VA 22313-1450
www.uspto.gov

JIMMY L. FUNKE
DELPHI TECHNOLOGIES, INC.
Legal Staff, Mail Code: CT10C
P.O. Box 9005
KOKOMO, IN 46904-9005

COPY MAILED

APR 15 2004

OFFICE OF PETITIONS

In re Application of :
Scott D. Brandenburg, et al. :
Application No. 10/321,900 : ON PETITION
Filed: December 17, 2002 :
Attorney Docket No. DP-306850 :

This is a decision on the petition, filed April 13, 2004, under 37 CFR(c)(2) to withdraw the above-identified application from issue after payment of the issue fee.

The petition is **GRANTED**.

The above-identified application is withdrawn from issue for consideration of a submission under 37 CFR 1.114 (request for continued examination). See 37 CFR 1.313(c)(2).

Petitioner is advised that the issue fee paid on March 22, 2004, in the above-identified application cannot be refunded. If, however, the above-identified application is again allowed, petitioner may request that it be applied towards the issue fee required by the new Notice of Allowance. [1]

Telephone inquiries relating to this decision should be directed to the undersigned at (703) 305-9220.

The application is being forwarded to Technology Center AU 2818 for further processing of the request for continued examination under 37 CFR 1.114.

Sherry D. Brinkley
Petitions Examiner
Office of Petitions
Office of the Deputy Commissioner
for Patent Examination Policy

[1]The request to apply the issue fee to the new Notice may be satisfied by completing and returning the new Issue Fee Transmittal Form PTOL-85(b), which includes the following language thereon: "Commissioner for Patents is requested to apply the Issue Fee and Publication Fee (if any) or re-apply any previously paid issue fee to the application identified above." Petitioner is advised that, whether a fee is indicted as being due or not, the Issue Fee Transmittal Form **must** be completed and timely submitted to avoid abandonment. Note the language on bold text on the first page of the Notice of Allowance and Fee(s) Due (PTOL-85).

UNITED STATES PATENT AND TRADEMARK OFFICE

Commissioner for Patents
United States Patent and Trademark Office
P.O. Box 1450
Alexandria, VA 22313-1450
www.uspto.gov

Paper No. 6

LOUIS P. HERZBERG
INTELLECTUAL PROPERTY LAW DEPT.
IBM CORPORATION
P O BOX 218
YORKTOWN HEIGHTS, NY 10598

COPY MAILED

OCT 2 0 2004

OFFICE OF PETITIONS

In re Application of	:	
Seraphin B. Calo et al	:	
Application No. 10/321,908	:	DECISION GRANTING PETITION
Filed: December 17, 2002	:	UNDER 37 CFR 1.137(b)
Attorney Docket No. YOR920010778US2	:	

This is a decision on the petition under 37 CFR 1.137(b), filed October 12, 2004, to revive the above-identified application.

The petition is **GRANTED**.

The above-identified application became abandoned for failure to reply in a timely manner to the Notice to File Missing Parts of Application (Notice) mailed February 4, 2003. The Notice set a period for reply of two (2) months from the mail date of the Notice to submit an executed oath or declaration and a $130 surcharge for its late filing. No extensions of time under the provisions of 37 CFR 1.136(a) were obtained. Accordingly, the above-identified application became abandoned on April 5, 2003. A Notice of Abandonment was mailed on February 3, 2004.

37 CFR 1.137(b)(3) requires a statement that the entire delay in filing the required reply from the due date for the reply until the filing of a grantable petition pursuant to 37 CFR 1.137(b) was unintentional. Since the statement contained in the instant petition varies from the language required by 37 CFR 1.137(b)(3), the statement contained in the instant petition is being construed as the statement required by 37 CFR 1.137(b)(3).

The petition satisfies the conditions for revival pursuant to the provisions of 37 CFR 1.137(b) in that (1) the reply in the form of an executed oath/declaration and surcharge of $130; (2) the petition fee of $1,330; and (3) an adequate statement of unintentional delay have been received. Accordingly, the reply to the Notice of February 4, 2003 is accepted as having been unintentionally delayed.

Telephone inquiries concerning this decision should be directed to the undersigned at (571) 272-3218.

The application file is being forwarded to the Office of Initial Patent Examination Division for preexamination processing.

Frances Hicks
Petitions Examiner
Office of Petitions
Office of the Deputy Commissioner
for Patent Examination Policy

UNITED STATES PATENT AND TRADEMARK OFFICE

Commissioner for Patents
United States Patent and Trademark Office
P.O. Box 1450
Alexandria, VA 22313-1450
www.uspto.gov

Paper No.

Louis P Herzberg
Intellectual Property Law Department
IBM Corporation
P O Box 218
Yorktown Heights NY 10598

COPY MAILED

APR 16 2007

OFFICE OF PETITIONS

In re Application of	:	
Calo et al.	:	DECISION ON PETITION
Application No. 10/321,908	:	and
Filed: December 17, 2002	:	NOTICE OF NONACCEPTANCE
Atty Docket No.YOR920010778US2	:	OF CHANGE OF ADDRESS AND
	:	OF AUTHORIZATION TO ACT IN
	:	REPRESENTATIVE CAPACITY

This is a decision on the PETITION FOR REVIVAL OF AN APPLICATION FOR PATENT ABANDONED UNINTENTIONALLY UNDER 37 CFR 1.137(b) filed February 26, 2007.

The petition is **GRANTED**.

The above-identified application became abandoned for failure to file a reply to the non-final Office action mailed July 3, 2006. This Office action set a shortened statutory period for reply of three (3) months, with extensions of time obtainable under § 1.136(a). No reply considered timely filed and no extension of time considered obtained, the application became abandoned effective October 4, 2006. A courtesy Notice of Abandonment was mailed on January 16, 2007.

The petition includes the required reply in the form of an amendment, the required statement of unintentional delay and payment of the petition fee. No terminal disclaimer is required.

Accompanying the petition was a change of mailing address and authorization to act in a representative capacity. Both of these documents were signed by patent practitioner Lisa Yamonaco. However, practitioner Yamonaco is not an attorney or agent of record in the application. A careful review of the record reveals that a power of attorney to practitioner Yamonaco was never received in the Office. At most, she is acting in a representative capacity. A person acting in a representative capacity may file a petition (as in this case, the petition is signed by registered practitioner Steven Fischman). However, a person acting in a representative capacity may not sign (A) a power of attorney (37 CFR 1.32(b)(4)), (B) a document granting access to an application (except where an executed oath or declaration has not been filed, and the patent practitioner was named in the papers accompanying the application papers - 37 CFR 1.14(c)), (C) a change of correspondence address (except where an executed oath or declaration has not been filed, and the patent practitioner filed the application - 37 CFR 1.33(a)), (D) a terminal disclaimer (37 CFR 1.321(b)(1)(iv)), or (E) a request for an express abandonment without filing a continuing application (37 CFR 1.138(b)). Thus, neither the change of correspondence address or authorization to act in a representative capacity has been given any effect in this application.

A courtesy copy of this decision is being mailed to the address on the petition. All further correspondence will be mailed to the current correspondence address of record, until such time as a proper change of correspondence address is filed.

Technology Center AU 2141 has been advised of this decision. The application is, thereby, forwarded to the examiner for consideration of the reply submitted on petition filed February 26, 2007.

Telephone inquiries specific to this matter should be directed to the undersigned at (571) 272-3219.

Nancy Johnson
Senior Petitions Attorney
Office of Petitions

cc: SCULLY, SCOTT, MURPHY & PRESSER, PC
400 Garden City Plaza
Suite 300
Garden City, NY 11530

UNITED STATES PATENT AND TRADEMARK OFFICE

Commissioner for Patents
United States Patent and Trademark Office
P.O. Box 1450
Alexandria, VA 22313-1450
www.uspto.gov

Paper No. 10

Patrick D. Kelly
11939 Manchester #403
St. Louis MO 63131

COPY MAILED

MAY 23 2005

OFFICE OF PETITIONS

In re Application of
Garnett, et al.
Application No. 10/321,921
Filed: December 17, 2002
Attorney Docket No. ZX3R-CONT
For: ZEAXANTHIN FORMULATIONS FOR HUMAN INGESTION

ON PETITION

This is a decision on the petition under 37 CFR 1.137(b), filed on March 28, 2005 (certificate of mailing date March 23, 2005) to revive the above-identified application.

The above-identified application became abandoned for failure to reply in a timely manner to the January 26, 2004 Notice of Non-Compliant Amendment which set a one (1) month period for reply. No reply being received in the Office, this application became abandoned on February 27, 2004. A Notice of Abandonment was mailed on September 8, 2004.

Applicants have submitted an amendment in reply to the January 26, 2004 Notice, an acceptable statement of the unintentional nature of the delay in responding to the January 26, 2004 Notice, and the petition fee.

The petition is **GRANTED**.

After the mailing of this decision the application will be forwarded to Technology Center G.A.U. 1614's technical support staff for entry of the amendment filed on March 28, 2005 (certificate of mailing date March 23, 2005).

Telephone inquiries pertaining to this decision may be directed to the undersigned at (571) 272-3230.

E. Shirene Willis

E. Shirene Willis
Senior Petitions Attorney
Office of Petitions

UNITED STATES PATENT AND TRADEMARK OFFICE

COMMISSIONER FOR PATENTS
UNITED STATES PATENT AND TRADEMARK OFFICE
P.O. BOX 1450
ALEXANDRIA, VA 22313-1450
www.uspto.gov

NIXON PEABODY, LLP
161 N. CLARK ST.
48TH FLOOR
CHICAGO IL 60601-3213

COPY MAILED

JUN 19 2009

OFFICE OF PETITIONS

In re Application of :
Garnett, et al. : DECISION DISMISSING PETITION
Application No. 10/321,921 : UNDE37 CFR 1.183
Filed: December 17, 2002 :
Attorney Docket No. 252871-00012USC1 :

This is in response to the petition under 37 CFR 1.47(a), filed July 21, 2008. The instant matter is being treated under 37 CFR 1.183 to waive the requirements of 37 CFR 1.172. [1]The required petition fee, $400.00, has been charged to petitioners' deposit account as authorized.

Petitioners requests waiver of the rule (presumably § 1.172) that requires that all joint inventors sign any supplemental declaration in a broadening reissue application.

The petition is DISMISSED.

BACKGROUND

1. U.S. Patent No. 5,827,652 (the '652 patent) issued to Garnett, et al. on October 27, 1998.

2. A broadening reissue application (the present application) was filed on December 17, 2002, for the reissue of the '652 patent, and it was assigned application number 10/321,921. The reissue declaration to support the filed reissue application was signed by all of the joint inventors.

3. A supplemental reissue declaration under 37 CFR 1.175(b)(1) was filed July 21, 2008, along with a the present petition under 37 CFR 1.47 requesting acceptance of the supplemental reissue declaration signed by less than all of the joint inventors.

---

[1] 37 CFR 1.47 only applies where, in the first instance, the signature of an originally named, or to be added, inventor can not be obtained. As all inventors executed an original reissue declaration and thus "made" the application, 37 CFR 1.47 does not apply in this case. See 37 CFR 1.47; MPEP 201.03. Rather, the remedy lies under 37 CFR 1.183, when a required supplemental declaration is not executed in whole or in part by one or more previously signing inventors. See MPEP 603.

4. The petition is accompanied by a supplemental reissue application declaration by the inventors, signed by two of the three inventors named in the application. The declaration is not signed by joint inventor Luis H. Guerra-Santos. It is for this supplemental declaration that the petition requests acceptance, via suspension or waiver of the regulations.

5. The petition proffers a showing for the purpose of establishing that the inventor is unavailable to sign the supplemental reissue declaration. The petition sets forth (a) the efforts made on behalf of the assignee to contact the inventor and obtain the requisite signature on the supplemental declaration, and (b) the lack of success of such efforts.

6. Petitioners have demonstrated that, on January 8, 2008, the supplemental reissue declaration was e-mailed to the non-signing inventor. No response to the email communication was received.

7. Petitioners have further demonstrated that, on January 28, 2008, a letter, supplemental reissue declaration, and copies of the application papers were sent to the inventor at his last known address via USPS "certified mail," *and that the inventor signed for the package* containing these documents.

8. Dennis L. Gierhart signed the reissue application declaration filed July 21, 2008, on behalf of himself, assignee, and Mr. Guerra-Santos.

DECISION

35 U.S.C. 251, which is directed to reissue, does not address the signature requirements of a declaration in reissue. 37 CFR 1.172 requires that a reissue declaration be made (and signed) by the inventors, except as otherwise provided (§§ 1.42, 1.43, 1.47), where the scope of the claims of the original patent is being enlarged. 37 CFR § 1.175(b)(1), requires that:

> "For any error corrected, which is not covered by the oath or declaration submitted under paragraph (a) of this section, applicant must submit a supplemental oath or declaration stating that every such error arose without any deceptive intention on the part of the applicant."

37 CFR 1.175(b)(1), taken in conjunction with 37 CFR 1.172, requires a supplemental declaration to be signed by all inventors. This is because all oaths or declarations necessary to fulfill the rule requirements in a reissue application are taken together collectively as a single oath or declaration. Thus, each oath and/or declaration must bear the appropriate signature of the inventor(s).

37 CFR 1.183 permits, in an extraordinary situation, waiver of a rule which is not a requirement of the statute, where justice requires such waiver, and applicant has requested a waiver of the requirement that the 37 CFR 1.175(b)(1) supplemental declaration be signed by all of the inventor.

The instant petition and supporting declaration of Dennis L. Gierhart provide an appropriate and sufficient showing that the inventor is unavailable to sign the supplemental declaration. Further, the statement under 37 CFR 3.73(b) filed December 17, 2002 establishes that the named joint inventor has assigned his entire right, title and interest in the application (and the patent for which reissue is requested) to the assignees set forth at USPTO Assignment REEL/FRAME Number 8676-0133. In addition, absent a waiver of the rules, the assignee will be unable to obtain a reissue patent for the instant broadening reissue application, and will be irreparably damaged. Accordingly, the rules may be waived to the extent that the "Supplemental Reissue Application Declaration by the Assignee" submitted with the present petition will be accepted as though it was signed by the inventors as required by 37 CFR 1.175(b)(1) taken in conjunction with § 1.172. *See In re Hayes*, 53 USPQ2d 1222 (Comm'r Pat. 1999).

However, waiver is not proper at this point, in view of the following. The reissue application declaration is not acceptable, as it was improperly executed on behalf the Mr. Guerra-Santos by Mr. Gierhart. An oath or declaration signed by all the available joint inventors *with the signature block of the nonsigning inventor(s) left blank* may be treated as having been signed by all the available joint inventors on behalf of the nonsigning inventor(s), unless otherwise indicated. As the reissue application declaration has been improperly executed on behalf of the non-signing inventor, any request for reconsideration must be accompanied by a newly executed reissue application declaration signed by all of the available inventors on behalf of themselves and the non-signing inventor (but under their own signature blocks). The signature block of the non-signing inventor should be left blank.

CONCLUSION

In view thereof, the petition under 37 CFR 1.183 is Dismissed.

Any request for reconsideration should be filed within TWO MONTHS of the mailing date of this decision in order to be considered timely. 37 CFR 1.181(f). This time period may not be extended pursuant to 37 CFR 1.136.

Further correspondence with respect to this matter should be addressed as follows:

By Mail: Mail Stop PETITION
Commissioner for Patents

Post Office Box 1450
Alexandria, VA 22313-1450

By Hand: U. S. Patent and Trademark Office
Customer Window, Mail Stop PETITIONS
401 Dulany Street
Alexandria, VA 22314

By FAX:

The centralized facsimile number is **(571) 273-8300.**

By EFS:

Registered users may submit the response via the electronic filing system EFS-Web, at:
https://sportal.uspto.gov/authenticate/authenticateuserlocalepf.html

Telephone inquiries should be directed to Petitions Attorney Alesia M. Brown at (571) 272-3205.

/Kenneth M. Schor/

Kenneth M. Schor
Senior Legal Advisor
Office of Patent Legal Administration

UNITED STATES PATENT AND TRADEMARK OFFICE

COMMISSIONER FOR PATENTS
UNITED STATES PATENT AND TRADEMARK OFFICE
P.O. BOX 1450
ALEXANDRIA, VA 22313-1450
www.uspto.gov

NIXON PEABODY, LLP
300 S. Riverside Plaza
16th Floor
CHICAGO IL 60606

COPY MAILED

DEC 0 8 2009

OFFICE OF PETITIONS

In re Application of :
Garnett, et al. : DECISION GRANTING STATUS
Application No. 10/321,921 : UNDER 37 CFR 1.47(a)
Filed: December 17, 2002 :
Atty. Dkt. No. 252871-00012USC1 :

This is in response to the renewed petition under 37 CFR 1.47(a), filed August 19, 2009. The instant matter is being treated under 37 CFR 1.183 to waive the requirements of 37 CFR 1.172[1]. No further fee is due in connection with this matter.

Petitioners requests waiver of the rule (presumably § 1.172) that requires that all joint inventors sign any supplemental declaration in a broadening reissue application.

The petition under 37 CFR 1.183 is GRANTED.

BACKGROUND

1. U.S. Patent No. 5,827,652 (the '652 patent) issued to Garnett, et al. on October 27, 1998.

2. A broadening reissue application (the present application) was filed on December 17, 2002, for the reissue of the '652 patent, and it was assigned application number 10/321,921. The reissue declaration to support the filed reissue application was signed by all of the joint inventors.

3. A supplemental reissue declaration under 37 CFR 1.175(b)(1) was filed July 21, 2008, along with a the present petition under 37 CFR 1.47 requesting acceptance of the supplemental reissue declaration signed by less than all of the joint inventors.

4. The July 21, 2008 petition was accompanied by a supplemental reissue application declaration by the inventors, signed by two of the three inventors named in the application. The declaration is not signed by joint inventor Luis H. Guerra-Santos. It is for this supplemental declaration that the July 21, 2008 petition requests acceptance, via suspension or waiver of the regulations.

[1] 37 CFR 1.47 only applies where, in the first instance, the signature of an originally named, or to be added, inventor can not be obtained. As all inventors executed an original reissue declaration and thus "made" the application, 37 CFR 1.47 does not apply in this case. See 37 CFR 1.47; MPEP 201.03. Rather, the remedy lies under 37 CFR 1.183, when a required supplemental declaration is not executed in whole or in part by one or more previously signing inventors. See MPEP 603.

5. July 21, 2008 petition proffered a showing for the purpose of establishing that the inventor is unavailable to sign the supplemental reissue declaration. The petition set forth (a) the efforts made on behalf of the assignee to contact the inventor and obtain the requisite signature on the supplemental declaration, and (b) the lack of success of such efforts.

6. On June 19, 2009, a decision was issued dismissing the July 21, 2008 petition.

7. On August 19, 2009, a renewed petition under 37 CFR 1.47 and 37 CFR 1.183 was filed, together with a supplemental reissue declaration under 37 CFR 1.175(b)(1), the renewed petition again requesting acceptance of the supplemental reissue declaration signed by less than all of the joint inventors.

DECISION

35 U.S.C. 251, which is directed to reissue, does not address the signature requirements of a declaration in reissue. 37 CFR 1.172 requires that a reissue declaration be made (and signed) by the inventors, except as otherwise provided (§§ 1.42, 1.43, 1.47), where the scope of the claims of the original patent is being enlarged. 37 CFR § 1.175(b)(1), requires that:

> "For any error corrected, which is not covered by the oath or declaration submitted under paragraph (a) of this section, applicant must submit a supplemental oath or declaration stating that every such error arose without any deceptive intention on the part of the applicant."

37 CFR 1.175(b)(1), taken in conjunction with 37 CFR 1.172, requires a supplemental declaration to be signed by all inventors. This is because all oaths or declarations necessary to fulfill the rule requirements in a reissue application are taken together collectively as a single oath or declaration. Thus, each oath and/or declaration must bear the appropriate signature of the inventor(s).

37 CFR 1.183 permits, in an extraordinary situation, waiver of a rule which is not a requirement of the statute, where justice requires such waiver, and applicant has requested a waiver of the requirement that the 37 CFR 1.175(b)(1) supplemental declaration be signed by all of the inventor.

The original petition, the renewed petition, and supporting declaration of Dennis L. Gierhart (taken together) provide an appropriate and sufficient showing that the inventor is unavailable to sign the supplemental declaration. Further, the statement under 37 CFR 3.73(b) filed December 17, 2002 establishes that the named joint inventor has assigned his entire right, title and interest in the application (and the patent for which reissue is requested) to the assignees set forth at USPTO Assignment REEL/FRAME Number 8676-0133. In addition, absent a waiver of the rules, the assignee will be unable to obtain a reissue patent for the instant broadening reissue application, and will be irreparably damaged. Accordingly, the rules may be waived to the extent that the "Supplemental Reissue Application Declaration by the Assignee" submitted with the present petition will be accepted as though it was signed by the inventors as required by 37 CFR 1.175(b)(1) taken in conjunction with § 1.172. *See In re Hayes,* 53 USPQ2d 1222 (Comm'r Pat. 1999).

Further, the August 19, 2009 supplemental reissue declaration under 37 CFR 1.175(b)(1) is properly executed on behalf the Mr. Guerra-Santos by the remaining inventors.

CONCLUSION

1. In view thereof, the petition under 37 CFR 1.183 is granted.

2. Jurisdiction over the application is being forwarded to Technology Center Art Unit 1618 for further processing.

3. Telephone inquires should be directed to Petitions Attorney Alesia M. Brown at 571272-3205.

/KENNETH M. SCHOR/

Kenneth M. Schor
Senior Legal Advisor
Office of Patent Legal Administration

SPE RESPONSE FOR CERTIFICATE OF CORRECTION

Paper No.: _____

DATE : June 26, 2007

TO SPE OF : ART UNIT 3738

SUBJECT : Request for Certificate of Correction for Appl. No. 10/321948 patent no.7063727

Please respond to this request for a certificate of correction within 7 days.

Please review the requested changes/corrections as shown in the **COCIN** document(s) in the IFW application image. No new matter should be introduced, nor should the scope or meaning of the claims be changed.

Please complete the response (see below) and forward the completed response to scanning using document code **COCX**.

Magdalene Talley

Certificates of Correction Branch

703-308-9390 ext. 116

Thank You For Your Assistance

The request for issuing the above-identified correction(s) is hereby:

Note your decision on the appropriate box.

- ☐ **Approved** — **All** changes apply.
- ☑ **Approved in Part** — Specify below which changes **do not** apply.
- ☐ **Denied** — State the reasons for denial below.

Comments: Changes to Column 24, lines 1-2, Claim 6, will not be entered because they change the scope of the claim.

Cori McDermott — **SPE**

3738 — **Art Unit**

PTOL-306 (REV. 7/03)

U.S. DEPARTMENT OF COMMERCE Patent and Trademark Office

ENTER IN PART: /S.G./ 06/03/2009
Receipt date: 10/10/2006

UNITED STATES PATENT AND TRADEMARK OFFICE
CERTIFICATE OF CORRECTION

PATENT NO. : 7,063,727
APPLICATION NO. : 10/321,948
ISSUE DATE : June 20, 2006
INVENTOR(S) : Phillips, et al.

It is certified that error appears in the above-identified patent and that said Letters Patent is hereby corrected as shown below:

On Page 1, in Column 1, Line 2, please delete "Hillary" and insert - - Hilary - -

On Page 1, in Column 1 (inventors), Line 3, please Delete "Dana Point," and insert - - Carlsbad, - -

In Column 4 , Line 58, please Delete "1B-11D" and insert - - 11B-11D - -

In Column 8, Line 67, please Delete "ankles" and insert - - ankle - -

In Column 21, Line 27, please Delete "15A-1.6" and insert - - 15A-16 - -,

In Column 23, Line 43 (approx.), please In Claim 1, delete "at a least" and insert - - at least - -,

~~In Column 24, Line 1-2, please In Claim 6, after "element" delete "having a length substantially shorter than the foot plate element,"~~ DO NOT ENTER /SGP/

In Column 24, Line 3, please In Claim 6, delete "sot" and insert - - soft - -,

In Column 24, Line 9, please In Claim 6, delete "trough" and insert - - through - -

In Column 24, Line 11, please In Claim 6, after "motion;" delete "and"

In Column 24, Line 49 (approx.), please In Claim 12, after "element" insert - - , - -. (second occurrence)

In Column 26, Line 29 (approx.), please In Claim 40, delete "foot" and insert - - foot, - - (first occurrence)

In Column 26, Line 42, please In Claim 40, delete "portion" and insert - - portion, - -

2990172 / rf
100406

/Suzette J Gherbi/
Primary Examiner,
Art Unit 3738

MAILING ADDRESS OF SENDER:

Thomas Y. Yee
KNOBBE, MARTENS, OLSON & BEAR, LLP
2040 Main Street; 14th Floor
Irvine, California 92614

DOCKET NO. FLEXFTL.146CP2C1

OCT 16 2006

ENTER IN PART: /S.G./ 06/03/2009
Receipt date: 10/10/2006

10/321,948.

10321948 - GAU: 3738

Knobbe Martens Olson & Bear LLP

Intellectual Property Law

2040 Main Street
Fourteenth Floor
Irvine, CA 92614
Tel 949-760-0404
Fax 949-760-9502
www.kmob.com

Thomas Y. Yee

#004

October 6, 2006

Commissioner for Patents
P.O. Box 1450
Alexandria, VA 22313-1450

Certificate
OCT 12 2006
of Correction

Re: Title: FOOT PROTHESIS HAVING CUSHIONED ANKLE
Letters Patent No. 7,063,727
Issued: June 20, 2006
Our Reference: FLEXFT.146CP2C1

Dear Sir:

Enclosed for filing is a Certificate of Correction in connection with the above-identified patent.

As the errors cited in the Certificate of Correction were incurred through the fault of the Applicant, enclosed is our check in the amount of $100. Please charge any additional fees to our Deposit Account No. 11-1410.

10/10/2006 MBIZUNES 00000074 7063727
01 FC:1811 100.00 OP

Respectfully submitted,

Knobbe, Martens, Olson & Bear, LLP

Tom Yee
Registration No. 57,013
Customer No. 20,995

Enclosures

2993730 / rf
100506

OCT 16 2006

SPE RESPONSE FOR CERTIFICATE OF CORRECTION

Paper No.: _____

DATE : July 10, 2009

TO SPE OF : ART UNIT 3738
SUBJECT : Request for Certificate of Correction for Appl. No.: 10/321948/7063727
Please respond to this request for a certificate of correction within 7 days.

FOR IFW FILES:

Please review the requested changes/corrections as shown in the **COCIN** document(s) in the IFW application image. No new matter should be introduced, nor should the scope or meaning of the claims be changed.

Please complete the response (see below) and forward the completed response to scanning using document code **COCX**.

FOR PAPER FILES:

Please review the requested changes/corrections as shown in the attached certificate of correction. Please complete this form (see below) and forward it with the file to:

Certificates of Correction Branch (CofC)
South Tower - 9A22
Palm Location 7580

Magdalene Talley
Certificates of Correction Branch

703-308-9390 ext. 120

Thank You For Your Assistance

The request for issuing the above-identified correction(s) is hereby:
Note your decision on the appropriate box.

- ☒ **Approved** — **All** changes apply.
- ☐ **Approved in Part** — Specify below which changes **do not** apply.
- ☐ **Denied** — State the reasons for denial below.

Comments: _____

_____

_____

_____

_____

CMM _____ 3738
Art Unit

UNITED STATES PATENT AND TRADEMARK OFFICE

COMMISSIONER FOR PATENTS
UNITED STATES PATENT AND TRADEMARK OFFICE
WASHINGTON, D.C. 20231
www.uspto.gov

Paper No. 4

BLAKELY SOKOLOFF TAYLOR & ZAFMAN
12400 WILSHIRE BOULEVARD, SEVENTH FLOOR
LOS ANGELES, CA 90025

COPY MAILED

MAY 1 3 2003

OFFICE OF PETITIONS

In re Application of :
Azulay, et al. :
Application No. 10/321,956 : ON PETITION
Filed: December 16, 2002 :
Attorney Docket No. 6287P005 :

This is a decision on petition filed under 37 CFR 1.53(e) on April 4, 2003, filed in response to the Notice of Omitted Item(s) in a Nonprovisional Application ("Notice") mailed on February 3, 2003.

The petition is **dismissed.**

The application was filed on December 16, 2002. However, February 3, 2003, the Office of Initial Patent Examination mailed the Notice stating that the application had been accorded a filing date of December 16, 2002, and advising applicant that Figure 8b described in the specification appeared to have been omitted.

The mailing of the Notice permitted the applicant to either: (1) promptly establish prior receipt in the PTO of the drawing(s) at issue (generally by way of a date-stamped postcard receipt (MPEP 503)), or (2) promptly submit the omitted drawing(s) in a nonprovisional application and accept the date of such submission as the application filing date. An applicant asserting that the missing drawings were in fact deposited in the PTO with the application papers must file a petition (and appropriate petition fee) with evidence of such deposit. An applicant desiring to submit the omitted drawings in a nonprovisional application and accept the date of such submission as the application filing date must file any omitted drawing(s) in a nonprovisional application and accept the date of such submission as the application filing date must file any omitted drawing(s) with an oath or declaration in compliance with 37 CFR 1.63 and 1.64 referring to such drawings) and a petition under 37 CFR 1.182 (with the petition fee under 37 CFR 1.17(h) requesting the later filing date within two months of the date of the Notice (37 CFR 1.181(f)).

In this case, petitioner maintains that Figure 8b was not included among the original application papers, but that Figure 8b was not necessary to the understanding of the subject matter sought to be patented. Petitioner did supply a copy of Figure 8b. Petitioner's argument relative to the necessity of Figure 8b for the understanding of the subject matter sought to be patented will not be considered as the application has already been accorded a filing date by virtue of the remaining drawings filed on December 16, 2002, with the specification and claims.

Although petitioner has conceded that Figure 8b was not among the original application papers and has supplied a copy of the same, petitioner indicated that petitioner wishes to retain the presently accorded

filing date of December 16, 2002. The application will be processed and examined using only the application papers filed on December 16, 2002. The one sheet of drawings containing Figure 8b filed on December 16, 2002, will not be used for processing, but will be retained in the application file.

In view of the forgoing, the Notice was properly mailed and will not be withdrawn. The present petition was not necessitated by an error on the part of the Office and the $130.00 petition fee was required upon filing of the petition. Thus, the $130.00 petition fee will not be refunded.

Accordingly, after routing the application file to the Office of Initial Patent Examination, the application will be forwarded to the appropriate group art unit for consideration by the examiner of Figure 8b as a preliminary amendment. The application is being returned to the Office of Initial Patent Examination for further processing with a filing date of December 16, 2002, using the application papers filed on that date.

Any inquiries related to this decision should be directed to Kenya A. McLaughlin, Petitions Attorney, at (703)305-0010.

Kenya A. McLaughlin
Petitions Attorney
Office of Petitions

Beverly M. Flanagan
Supervisory Petitions Examiner
Office of Petitions

UNITED STATES PATENT AND TRADEMARK OFFICE

Commissioner for Patents
United States Patent and Trademark Office
P.O. Box 1450
Alexandria, VA 22313-1450
www.uspto.gov

Brinks Hofer Gilson & Lione
P.O. Box 10395
Chicago, IL 60610

COPY MAILED

AUG 0 1 2007

OFFICE OF PETITIONS

In re Application of :
Satoshi Hayasaka :
Application No. 10/321,959 :
Filed: 12/16/2002 :
Patent No. 7,120,878 :
Issued: 10/10/2006 :
Attorney Docket Number: :
9281-4446 :

DECISION ON APPLICATION
FOR PATENT TERM ADJUSTMENT

This is a decision on the "PETITION FOR RECONSIDERATION OF PATENT TERM ADJUSTMENT", filed October 31, 2006.

The application for patent term adjustment is **DISMISSED**.

Patentee is given **two (2) months** to respond to this decision. No extensions of time will be granted under 37 C.F.R. § 1.136.

On October 10, 2006, the above-identified application matured into U.S. Patent No. 7,120,878. The patent issued with a PTA of eight hundred forty-seven (847) days. The instant request for reconsideration was timely filed within 2 months of the date the patent issued.

The Office determined a patent term adjustment of eight hundred forty-seven (847) days pursuant to 37 CFR 1.702(a)(1) for failure to mail a first Office action of Notice of Allowance more than 14 months after the actual filing date of the application or more than 14 months after the date the application fulfilled the requirements of 35 U.S.C. 371. Specifically, the application was filed on December 16, 2002. The Office mailed a Notice of Allowance on June 12, 2006.

The present petition

Petitioner files the present petition and asserts that pursuant to 37 CFR 1.703(b) an additional period of adjustment of two hundred ninety-eight days. Petitioner states that

> [t]he period of adjustment pursuant to 37 C.F.R. 1.703(b) is the number of days in the period beginning on the day (the 3 year date) after the date that is three years after the

> date on which the application was filed pursuant to 35 U.S.C. 111(a) or fulfilled the requirements of 35 U.S.C. 371.

37 CFR 1.703(b) states:

> The period of adjustment under § 1.702(b) is the number of days, if any, in the period beginning on the day after the date that is three years after the date on which the application was filed under 35 U.S.C. 111(a) or the national stage commenced under 35 U.S.C. 371(b) or (f) in an international application and ending on the date a patent was issued, but not including the sum of the following periods:

The instant application issued 3 years and 298 days after the actual filing date. However, applicant is advised that any days of delay for Office issuance of the patent more than 3 years after the filing date of the application, which overlap with the days of patent term adjustment accorded prior to the issuance of the patent, will not result in any additional patent term adjustment. Further, in considering the overlap, the entire period during which the application was pending (except for periods excluded under 35 U.S.C. 154(b)(1)(B)(i)-(iii), and not just the period beginning three years after the actual filing date of the application, is the period of delay under 35 U.S.C. 154(b)(1)(B) in determining whether periods of delay overlap under 35 U.S.C. 154(b)(2)(A). See 35 U.S.C. 154(b) (1)(B); 35 U.S.C. 154(b)(2)(A); and 37 CFR 1.703(f). In this instance, the period of delay totalling 298 days attributable to the delay in the issuance of the patent overlaps with the adjustment of 847 days attributable to grounds specified in § 1.702(a)(1). Thus, no additional period of adjustment was entered beyond the 847 days.

In view thereof, the patent correctly issued with a revised Patent Term Adjustment of eight hundred forty-seven (847) days.

Receipt is acknowledged of the $200.00 fee set forth in 37 CFR 1.18(e). No additional fees are required.

Telephone inquiries specific to this matter should be directed to Attorney Derek L. Woods at (571) 272-3232.

Nancy Johnson
Senior Petitions Attorney
Office of Petitions

UNITED STATES PATENT AND TRADEMARK OFFICE

Commissioner f r Patents
United States Patent and Trademark Office
P. O. B x 1450
Alexandria, VA 22313-1450
www.uspto.gov

Paper No. 12

MINTZ, LEVIN, COHN, FERRIS, GLOVSKY
AND POPEO, P.C.
ONE FINANCIAL CENTER
BOSTON, MA 02111

COPY MAILED

SEP 2 6 2003

OFFICE OF PETITIONS

In re Application of :
Ferenc L. Boldog et al :
Application No. 10/321,962 : DECISION GRANTING
Filed: December 16, 2002 :STATUS UNDER 37 CFR 1.47(a)
For: TREATMENT OF INFLAMMATORY :
BOWEL DISEASE USING GROWTH :
FACTORS

This is in response to the petition under 37 CFR 1.47(a), filed September 8, 2003.

The petition is granted.

Petitioner has shown that the non-signing inventor (Elma Fernandes) cannot be reached to join in the filing of the above-identified application.

The above-identified application and papers have been reviewed and found in compliance with 37 CFR 1.47(a). This application is hereby accorded Rule 1.47(a) status. As provided in Rule 1.47(c), this Office will forward notice of this application's filing to the non-signing inventor at the address given in the petition. Notice of the filing of this application will also be published in the Official Gazette.

Telephone inquiries regarding this decision should be directed to Irvin Dingle at (703) 306-5684.

This application is being forwarded to Technology Center 1600.

Frances Hicks
Lead Petitions Examiner
Office of Petitions
Office of the Deputy Commissioner
for Patent Examination Policy

UNITED STATES PATENT AND TRADEMARK OFFICE

Commissioner for Patents
United States Patent and Trademark Office
P. O. Box 1450
Alexandria, VA 22313-1450
www.uspto.gov

ELMA R. FERNANDES
77 FLORENCE ROAD, APARTMENT 2B
BRANFORD, CT 06405

In re Application of
Ferenc L. Boldog; Catherine E. Burgess; Elma R. Fernandes; Michael E. Jeffers; William J. Larochelle; Henri S. Lichenstein; Jeffrey Peterson; Sudhirdas K. Prayaga; Beth Rittman; Juliette B. Shimkets; Richard A. Shimkets; Meijia Yang
Application No. 10/321,962
Filed: December 16, 2002
For: TREATMENT OF INFLAMMATORY BOWEL DISEASE USING GROWTH FACTORS

Dear Ms. Fernandes:

You are named as a joint inventor in the above identified United States patent application, filed under the provisions of 35 U.S.C. 116 (United States Code), and 37 CFR 1.47(a), Rules of Practice in Patent Cases. Should a patent be granted on the application you will be designated therein as a joint inventor.

As a named inventor you are entitled to inspect any paper in the file wrapper of the application, order copies of all or any part thereof (at a prepaid cost per 37 CFR 1.19) or make your position of record in the application. Alternatively, you may arrange to do any of the preceding through a registered patent attorney or agent presenting written authorization from you. If you care to join in the application, counsel of record (see below) would presumably assist you. Joining in the application would entail the filing of an appropriate oath or declaration by you pursuant to 37 CFR 1.63.

Telephone inquiries regarding this communication should be directed to the Irvin Dingle at (703) 306-5684. Requests for information regarding your application should be directed to the File Information Unit at (703) 308-2733. Information regarding how to pay for and order a copy of the application, or a specific paper in the application, should be directed to Certification Division at (703) 308-9726 or 1 (800) 972-6382 (outside the Washington D.C. area).

Frances Hicks
Lead Petitions Examiner
Office of Petitions
Office of the Deputy Commissioner
for Patent Examination Policy

cc:

Mintz, Levin, Cohn, Ferris,
Glovsky and Popeo, P.C.
One Financial Center
Boston, MA 02111

PBP

UNITED STATES PATENT AND TRADEMARK OFFICE

COMMISSIONER FOR PATENTS
UNITED STATES PATENT AND TRADEMARK OFFICE
P.O. BOX 1450
ALEXANDRIA, VA 22313-1450
www.uspto.gov

OIPE JC99
APR 26 2004
PATENT & TRADEMARK OFFICE

RECEIVED
MAR 24 2004
PHARMACIA
GLOBAL PATENT DEPT.
ST. LOUIS, MO

Paper No. 7

PHARMACIA CORPORATION
CORPORATE PATENT DEPARTMENT
800 NORTH LINDBERGH BLVD.
MAIL ZONE O4E
ST. LOUIS, MO 63167

Resp Due 4/18/04
DOCKETED
MAR 27 2004
BY: DOCKETING DEPT.
PHARMACIA

COPY MAILED
MAR 18 2004
OFFICE OF PETITIONS

In re Application of
Webber et al.
Application No. 10/321,969
Filed: December 17, 2002
Attorney Docket No. C-3300/1A

ON PETITION

This is a decision on the petition under 37 C.F.R. § 1.137(b), filed March 8, 2004, to revive the above-identified application.

The petition is **granted.**

The above-identified application became abandoned for failure to submit the issue fee and publication fee in a timely manner in reply to the Notice of Allowance mailed October 2, 2003, which set a statutory period for reply of three (3) months. Accordingly, the above-identified application became abandoned on January 3, 2004. A Notice of Abandonment was mailed on February 9, 2004.

Petitioner has met the requirements to revive the above-identified application pursuant to 37 CFR 1.137(b).

Petitioner's deposit account be will charged a total of $2960.00 to cover payment of the $1330.00 petition fee, the $1330.00 issue fee and the $300.00 publication fee as authorized.

There is no indication that petitioner has submitted an Issue Fee Transmittal Form (PTOL-85b). Accordingly, if petitioner desires to have the information normally found thereon printed on the patent, the attached blank Issue Fee Transmittal Form should be completed and returned to the Publishing Division within **ONE MONTH** from the mail date of this decision.

The file does not indicate a change of address has been submitted, although the address given on the petition differs from the address of record. If appropriate, a request to change the address of record should be filed. A courtesy copy of this decision is being mailed to the address given on the petition; however, the Office will mail all future correspondence solely to the address of record.

The file is now being forwarded to the Publishing Division for processing into a patent.

UNITED STATES PATENT AND TRADEMARK OFFICE

COMMISSIONER FOR PATENTS
UNITED STATES PATENT AND TRADEMARK OFFICE
P.O. BOX 1450
ALEXANDRIA, VA 22313-1450
www.uspto.gov

Paper No. 7

PHARMACIA CORPORATION
CORPORATE PATENT DEPARTMENT
800 NORTH LINDBERGH BLVD.
MAIL ZONE O4E
ST. LOUIS, MO 63167

COPY MAILED

MAR 1 8 2004

OFFICE OF PETITIONS

In re Application of
Webber et al.
Application No. 10/321,969
Filed: December 17, 2002
Attorney Docket No. C-3300/1A

ON PETITION

This is a decision on the petition under 37 C.F.R. § 1.137(b), filed March 8, 2004, to revive the above-identified application.

The petition is **granted.**

The above-identified application became abandoned for failure to submit the issue fee and publication fee in a timely manner in reply to the Notice of Allowance mailed October 2, 2003, which set a statutory period for reply of three (3) months. Accordingly, the above-identified application became abandoned on January 3, 2004. A Notice of Abandonment was mailed on February 9, 2004.

Petitioner has met the requirements to revive the above-identified application pursuant to 37 CFR 1.137(b).

Petitioner's deposit account be will charged a total of $2960.00 to cover payment of the $1330.00 petition fee, the $1330.00 issue fee and the $300.00 publication fee as authorized.

There is no indication that petitioner has submitted an Issue Fee Transmittal Form (PTOL-85b). Accordingly, if petitioner desires to have the information normally found thereon printed on the patent, the attached blank Issue Fee Transmittal Form should be completed and returned to the Publishing Division within **ONE MONTH** from the mail date of this decision.

The file does not indicate a change of address has been submitted, although the address given on the petition differs from the address of record. If appropriate, a request to change the address of record should be filed. A courtesy copy of this decision is being mailed to the address given on the petition; however, the Office will mail all future correspondence solely to the address of record.

The file is now being forwarded to the Publishing Division for processing into a patent.

Telephone inquiries should be directed to the undersigned at (703) 306-0482.

Liana Chase

Liana Chase
Petitions Examiner
Office of Petitions
Office of the Deputy Commissioner
for Patent Examination Policy

Enclosure: PTOL-85b

cc: PHILIP B. POLSTER, II
PHARMACIA CORPORATION
CORPORATE PATENT DEPARTMENT
P.O BOX 1027
CHESTERFIELD, MO 63006

UNITED STATES PATENT AND TRADEMARK OFFICE

Commissioner for Patents
United States Patent and Trademark Office
P.O. Box 1450
Alexandria, VA 22313-1450
www.uspto.gov

COPY MAILED

JAN 17 2007

OFFICE OF PETITIONS

Paper No. 11

Charles E. Graves Associates, P.C.
6818 Oasis Pass, Suite 100
Austin TX 78732

In re Application of :
Kevin Elliot COOPER et al. :
Application No. 10/321,973 : ON PETITION
Filed: December 17, 2002 :
Attorney Docket No. AMD/Motorola TT 5192 :

This is a decision on the petitions, filed January 31, 2006 and resubmitted February 6, 2006, requesting withdrawal of the Notice of Abandonment mailed December 27, 2005 under the provisions of 37 CFR 1.181 or in the alternative, to revive the application under 37 CFR 1.137(b), and the petition under 37 CFR 1.137(b) resubmitted July 24, 2006 and August 18, 2006, to revive the above-identified application.

The petitions under 37 CFR 1.181 are **DISMISSED** as moot in view of the request filed July 24, 2006 and resubmitted August 18, 2006, withdrawing the request to withdraw the holding of abandonment.

The petition under 37 CFR 1.137(b) is **GRANTED**.

The above-identified application became abandoned for failure to file a proper reply in a timely manner to the Notice to File Missing Parts of Nonprovisional Application mailed March 3, 2003, which set a shortened statutory period for reply of two (2) months. No extensions of time under the provisions of 37 CFR 1.136(a) was obtained. Accordingly, the above-identified application became abandoned on May 4, 2003. A Notice of Abandonment was mailed December 27, 2005.

The petition satisfies the conditions for revival pursuant to the provisions of 37 CFR 1.137(b) in that (1) the reply in the form of the required oath or declaration, and replacement drawings; (2) the petition fee of $1500; and (3) the required statement of unintentional delay have been received. Accordingly, the reply to the Notice to File Missing Parts of Nonprovisional Application of March 3, 2003 is accepted as having been unintentionally delayed.

Application No. 10/321,973

Telephone inquiries concerning this decision should be directed to David A. Bucci at (571) 272-7099.

The application file is being referred to the Office of Initial Patent Examination.

David Bucci
Petitions Examiner
Office of Petitions

SPE M. Tokar

SPE RESPONSE FOR CERTIFICATE OF CORRECTION 10/321,975

Paper No.: _____

DATE : 2/24/05

TO SPE OF : ART UNIT 2819

SUBJECT : Request for Certificate of Correction on Patent No.: 6894532

A response is requested with respect to the accompanying request for a certificate of correction.

Please complete this form and return with file, within 7 days to:
Palm location **7580, Certificates of Correction Branch – South Tower – 9A22**
If response is for an IFW, **return to employee (named below) via PUBSCofC Team in MADRAS.**
With respect to the change(s) requested, correcting Office and/or Applicant's errors, should the patent read as shown in the certificate of correction (COCIN)? No new matter should be introduced, nor should the scope or meaning of the claims be changed.

Lamonte M. Newsome
Certificates of Correction Branch
Tel. No. 703-305-8309

Thank You For Your Assistance

The request for issuing the above-identified correction(s) is hereby:
Note your decision on the appropriate box.

- ☒ **Approved** — **All** changes apply.
- ☐ **Approved in Part** — Specify below which changes **do not** apply.
- ☐ **Denied** — State the reasons for denial below.

Comments:

_____

_____

_____

_____

_____

SPE 2817 **Art Unit**

3677

UNITED STATES PATENT AND TRADEMARK OFFICE

COMMISSIONER FOR PATENTS
UNITED STATES PATENT AND TRADEMARK OFFICE
WASHINGTON, D.C. 20231
www.uspto.gov

APPLICATION NUMBER	FILING/RECEIPT DATE	FIRST NAMED APPLICANT	ATTORNEY DOCKET NUMBER
10/321,996	12/17/2002	Yasuhiro Kono	57392US008

CONFIRMATION NO.
4564

3M INNOVATIVE PROPERTIES COMPANY
PO BOX 33427
ST. PAUL MN 55133-3427

Decision Dismissing Petition under 37 CFR 1.138(c)

The declaration of express abandonment will not be recognized

This is in response to the petition under 37 CFR 1.138(c) for express abandonment to avoid publication of the above-identified application, for which a faxed copy of the original petition was received on October 16, 2003.
The petition is dismissed.

The express abandonment will **not** be recognized for the reason(s) indicated below:

1. ☐ The petition under 37 CFR 1.138(c) was not received in sufficient time to permit the appropriate officials to recognize the abandonment and remove the application from the publication process.

2. ■ The Application was published on July 10, 2003, in compliance with 35 U.S.C. 122(b), the publication number is US20030126724A1, and it is available on the USPTO web site at http://www.uspto.gov/patft/index.html.

The application **has been published** as scheduled.

Telephone inquiries should be directed to the Office of Patent Publication, the Pre-Grant Publication Division, at 703-605-4282.

Barbara J. Debnam
Office of Patent Publication
Pre-Grant Publication Division

RECEIVED
OCT 24 2003
GROUP 3600

OIPE JC119
OCT 16 2003
PATENT & TRADEMARK OFFICE

~~1772~~

PTO/SB/24A (08-03)
Approved for use through 07/31/2006. OMB 0651-0031
U.S. Patent and Trademark Office; U.S. DEPARTMENT OF COMMERCE
Under the Paperwork Reduction Act of 1995, no persons are required to respond to a collection of information unless it displays a valid OMB control number.

PETITION FOR EXPRESS ABANDONMENT TO AVOID PUBLICATION UNDER 37 CFR 1.138(c)

Fax the petition directly to the
Pre-Grant Publication Division at (703) 305-8568
Or **Mail** the petition to:
Mail Stop PGPub-ABD
Commissioner for Patents
P.O. Box 1450, Alexandria, VA 22313-1450

Application Number	10/321,996
Filing Date	December 17, 2002
First Named Inventor	Bruce E. Taylor
Art Unit	1772
Examiner Name	
Attorney Docket Number	M-639

RECEIVED
OCT 24 2003
GROUP 3600

Petition for Express Abandonment to Avoid Publication under 37 CFR 1.138(c)

I hereby petition to expressly abandon the above-identified application to avoid publication.

Petition Fee – must be filed with petition to avoid delays in recognizing the petition.

a. [X] The Director is hereby authorized to charge the petition fee under 37 CFR 1.17(h) to Deposit Account No. 13-3955.

b. [ ] Check in the amount of $_____ is enclosed.

c. [ ] Payment by credit card (Form PTO-2038 is enclosed).

NOT OK FOR ABANDONMENT
OCT 21 2003
PG PUB OFFICE
INITIALS

NOTE: A paper requesting express abandonment of an application is not effective unless and until an appropriate USPTO official recognizes and acts on the paper. See the Manual of Patent Examining Procedure (MPEP), section 711.01. In addition, the paper will not stop publication of the application unless a petition under 37 CFR 1.138(c) is recognized and acted on by the Pre-Grant Publication Division in sufficient time to avoid publication (e.g., more than four (4) weeks prior to the projected publication date).

RECEIVED
USPTO-PG PUBS
OCT 21 2003

I am the:

[ ] applicant.

[ ] assignee of record of the entire interest. See 37 CFR 3.71.
Statement under 37 CFR 3.73(b) is enclosed. (Form PTO/SB/96)

[X] attorney or agent of record. Registration Number 19,768

Joseph J. Grass
Signature

October 13, 2003
Date

Joseph J. Grass
Typed or printed name

(937) 865-2012
Telephone Number

Note: Signatures of all the inventors or assignees of record of the entire interest or their representative(s) are required. Submit multiple forms if more than one signature is required, see below.

[ ] Total of _____ forms are submitted.

This collection of information is required by 37 CFR 1.138(c). The information is required to obtain or retain a benefit by the public which is to file (and by the USPTO to process) an application. Confidentiality is governed by 35 U.S.C. 122 and 37 CFR 1.14. This collection is estimated to take 12 minutes to complete, including gathering, preparing, and submitting the completed application form to the USPTO. Time will vary depending upon the individual case. Any comments on the amount of time you require to complete this form and/or suggestions for reducing this burden, should be sent to the Chief Information Officer, U.S. Patent and Trademark Office, U.S. Department of Commerce, **P.O. Box 1450**, Alexandria, VA 22313-1450. DO NOT SEND FEES OR COMPLETED FORMS TO THIS ADDRESS. **SEND TO: MailStop PGPub-ABD, Commissioner for Patents, P.O. Box 1450, Alexandria, VA 22313-1450.**

If you need assistance in completing the form, call 1-800-PTO-9199 and select option 2.

10/20/2003 SSAMDARA 00000012 13955 10321996
01 FC:1460 130.00 DA

UNITED STATES PATENT AND TRADEMARK OFFICE

Commissioner for Patents
United States Patent and Trademark Office
P.O. Box 1450
Alexandria, VA 22313-1450
www.uspto.gov

PERKINS COIE LLP
P.O. BOX 2168
MENLO PARK CA 94026

COPY MAILED

JUN 09 2008

OFFICE OF PETITIONS

In re Application of
John E. Wiktorowicz et al.
Application No. 10/322,000
Filed: December 17, 2002
Attorney Docket No. 55525-8058.US00

ON PETITION

This is a decision on the petition filed May 12, 2008, to revive the above identified application under 37 CFR 1.137(b).

The petition is **DISMISSED**.

Any further petition to revive the above-identified application must be submitted within TWO (2) MONTHS from the mail date of this decision. Extensions of time under 37 CFR 1.136(b) are permitted. The reconsideration request should include a cover letter entitled "Petition under 37 CFR 1.137." This is **not** final agency action within the meaning of 5 U.S.C. § 704.

At the outset, a review of the record indicates that a revocation and power of attorney has been filed signed only by joint inventor Wiktorowicz and therefore purports to only be on behalf of joint inventor Wiktorowicz. The power of attorney signed by joint inventor Wiktorowicz revokes all prior powers of attorney and appoints BENJAMIN AARON ADLER, ADLER & ASSOCIATES, 8011 CANDLE LANE, HOUSTON, TX 77071.

Because BENJAMIN AARON ADLER purports to only represent one of the three inventors and because the petition to revive the instant application is filed by BENJAMIN AARON ADLER and is not signed by either of the other two inventors, or counsel for the other two inventors (PERKINS COIE LLP), the petition cannot be addressed on the merits.

The Office will allow for dual representation of inventors however, before the Office will allow for the application to be prosecuted at least a petition under 37 CFR 1.182 and fee, directed to the Office of Petitions, for acceptance of a power of attorney by less than all the applicants in the above-identified application will need to be filed.

At that time, in order to assure that all interests are properly and effectively represented, all further correspondence to the Patent and Trademark Office (PTO) must be signed by petitioner's representative, BENJAMIN AARON ADLER, named in

the revocation and power of attorney submitted by joint inventor Wiktorowicz and by the other two joint inventors or their representative, PERKINS COIE LLP. Each attorney signing subsequent papers must indicate whom he or she represents.

All parties are reminded that dual correspondence is not permitted, and will not be undertaken by the PTO.

The PTO will continue to conduct correspondence with the attorneys first named in the application, i.e., PERKINS COIE LLP, at the correspondence address of record noted above, who will also be responsible for coordinating replies or submissions to the PTO. See MPEP 402.10.

Further correspondence with respect to this matter should be addressed as follows:

By mail: Mail Stop Petitions
Commissioner for Patents
P.O. Box 1450
Alexandria VA 22313-1450

By FAX: (571) 273-8300
ATTN: Office of Petitions

Telephone inquiries concerning this matter may be directed to the undersigned Petitions Attorney at (571) 272-3212.

Patricia Faison-Ball
Senior Petitions Attorney
Office of Petitions

cc:
BENJAMIN AARON ADLER
ADLER & ASSOCIATES
8011 CANDLE LANE
HOUSTON, TX 77071

UNITED STATES PATENT AND TRADEMARK OFFICE

COMMISSIONER FOR PATENTS
UNITED STATES PATENT AND TRADEMARK OFFICE
P.O. BOX 1450
ALEXANDRIA, VA 22313-1450
www.uspto.gov

Paper No. 4

SCHWEGMAN, LUNDBERG, WOESSNER & KLUTH, P.A.
P.O. BOX 2938
MINNEAPOLIS MN 55402

COPY MAILED

NOV 2 1 2003

OFFICE OF PETITIONS

In re Application of
Bennett, et al.
Application No. 10/322,003
Filed: December 17, 2002
Attorney Docket No. 884.583US1
For: METHODS AND SYSTEMS TO CONTROL VIRTUAL MACHINES

: DECISION ACCORDING STATUS
: UNDER 37 CFR 1.47(a)

This is in response to the petition under 37 CFR 1.47(a), filed October 2, 2003 (certificate of mailing Date September 29, 2003).

The petition is granted.

Petitioners have shown that the non-signing inventors, Andrew Glew and Erich Boleyn, have constructively refused to join in the filing of the above-identified application after having been presented with the application papers. Specifically, the affidavit of Case Management Assistant Chris Hammond and accompanying exhibits to the affidavit establish that the inventors were mailed and received the application papers, including the specification, claims and drawings, but failed to respond to numerous requests that they sign the declaration. Petitioners have submitted a declaration in compliance with 37 CFR 1.63 and 1.64.

This application and papers have been reviewed and found in compliance with 37 CFR 1.47(a). This application is hereby accorded Rule 1.47(a) status.

As provided in Rule 1.47(c), this Office will forward notice of this application's filing to the non-signing inventors at the addresses given in the petition. Notice of the filing of this application will also be published in the Official Gazette.

After this decision is mailed, the above-identified application will be forwarded to Technology Center 2100 for examination in due course.

Telephone inquiries should be directed to the undersigned at (703) 308-6712.

E. Shirene Willis
Senior Petitions Attorney
Office of Petitions

UNITED STATES PATENT AND TRADEMARK OFFICE

COMMISSIONER FOR PATENTS
UNITED STATES PATENT AND TRADEMARK OFFICE
P.O. BOX 1450
ALEXANDRIA, VA 22313-1450
www.uspto.gov

ANDREW GLEW
2415 FAIROAK COURT
SAN JOSE CA 95125

COPY MAILED

NOV 2 1 2003

OFFICE OF PETITIONS

In re Application of
Bennett, et al.
Application No. 10/322,003
Filed: December 17, 2002
Attorney Docket No. 884.583US1
For: METHODS AND SYSTEMS TO CONTROL VIRTUAL MACHINES

LETTER

Dear Mr. Glew:

You are named as a joint inventor in the above identified United States patent application, filed under the provisions of 35 U.S.C. 116 (United States Code), and 37 CFR 1.47(a), Rules of Practice in Patent Cases. Should a patent be granted on the application you will be designated therein as a joint inventor.

As a named inventor you are entitled to inspect any paper in the file wrapper of the application, order copies of all or any part thereof (at a prepaid cost per 37 CFR 1.19) or make your position of record in the application. Alternatively, you may arrange to do any of the preceding through a registered patent attorney or agent presenting written authorization from you. If you care to join the application, counsel of record (see below) would presumably assist you. Joining in the application would entail the filing of an appropriate oath or declaration by you pursuant to 37 CFR 1.63.

Requests for information regarding your application should be directed to the File Information Unit at (703)308-2733. Information regarding how to pay for and order a copy of the application, or a specific paper in the application, should be directed to Certification Division at (703)308-9726 or 1(800)972-6382 (outside the Washington D.C. area).

Telephone inquiries regarding this communication should be directed to the undersigned at (703) 308-6712.

E. Shirene Willis
Senior Petitions Attorney
Office of Petitions

ATTORNEY OF RECORD: SCHWEGMAN, LUNDBERG, WOESSNER & KLUTH, P.A.
P.O. BOX 2938
MINNEAPOLIS MN 55402

NOTICE RE: CERTIFICATES OF CORRECTION

DATE : 5/18/06 **Paper No.:**

TO : **Supervisor, Art Unit** _____

SUBJECT : Certificate of Correction Request in Patent No.: 6,876,265

A response to the following question is requested with respect to the accompanying request for a certificate of correction.

With respect to the change(s) requested, correcting Office and/or Applicant's errors, should the patent read as shown in the certificate of correction? No new matter should be introduced, nor should the scope or meaning of the claims be changed.

PLEASE COMPLETE THIS FORM AND
RETURN WITH FILE, WITHIN 7 DAYS,
TO CERTIFICATES OF CORRECTION BRANCH - PK 3-915/922
PALM LOCATION 7580 - TEL. N0. 305-8309

THANK YOU FOR YOUR ASSISTANCE!

Note your decision by placing a check mark in the appropriate box below, indicating whether all changes requested in the Request for Certificate of Correction should be applied. Please specify which changes should not be applied and indicate the reason(s) for denial, in the "Comments" section below.

[X] **YES** [ ] **NO**

[ ]

Mark Polutta
Office of Patent Legal Administration **Art Unit**

The opinion in support of the petition decision being entered today was not written for publication and is not binding precedent of the Board.

UNITED STATES PATENT AND TRADEMARK OFFICE

BEFORE THE

BOARD OF PATENT APPEALS AND INTERFERENCES

In re Application of

RYAN C. SHIRK, STEPHEN M. SANOCKI,
JOSEPH C. PEISERT, ROGER L. LANGER,
LOYD R. HORNBACK III, and IAN R. HARDING

Appeal No. 2006-0583
Application No. 10/322,008

MAILED

MAR 16 2006

U.S. PATENT AND TRADEMARK OFFICE
BOARD OF PATENT APPEALS
AND INTERFERENCES

DECISION ON PETITION

This is a decision on the petition filed January 10, 2006 under 37 CFR § 1.183 to suspend or waive the requirement to timely file a request for an oral hearing in a separate paper under 37 CFR § 41.47(b).

Pursuant to 37 CFR § 1.181(g) and 37 CFR § 41.3, the Director has delegated authority to decide petitions under 37 CFR §§ 1.181 and 1.183 from actions of the Board of Patent Appeals and Interferences or of personnel at the Board of Patent Appeals and Interferences to the Chief Administrative Patent Judge of the Board of Patent Appeals and Interferences. Manual of Patent Examining Procedure (MPEP) § 1002.02(f)(4)(b).

The petition under 37 CFR § 1.183 to suspend or waive the rules to allow a personal appearance before the Board to argue the issues of this appeal at the oral hearing is DENIED.

FINDINGS

1. On April 15, 2005 (Certificate of Mailing date of April 11, 2005), Petitioner filed an Appeal Brief. On page 1 of the Appeal Brief, Petitioner included a brief statement that states: "Appellant requests the opportunity for a personal appearance before the Board of Appeals to argue the issues of this appeal."

2. Some time after the October 19, 2005 deadline to request an oral hearing, Petitioner discovered that he "inadvertently and unintentionally failed to file a Request for an Oral Hearing" (Petition, page 1).

3. A review of the record indicates that Appellant did not file a separate paper captioned "REQUEST FOR ORAL HEARING."

4. Petitioner filed the instant petition under 37 CFR § 1.183 to suspend "the patent rules...in order for Applicants to file a Request for an Oral Hearing in the present case" (id.).

5. In support of the petition under 37 CFR § 1.183, Petitioner argues that "granting of the present petition will enable a more complete analysis of the issues on appeal in the present case. In granting this petition, Applicants would have the opportunity to be available for any questions from one or more Administrative Judges considering the issues on appeal" (id.).

DISCUSSION

The procedure for filing a petition to suspend the rules under 37 CFR reads as follows:

> § 1.183 Suspension of rules.
> In an extraordinary situation, when justice requires, any requirement of the regulations in this part which is not a requirement of the statutes may be suspended or waived by the Director or the Director's designee, sua sponte, or on petition of the interested party, subject to such other requirements as may be imposed. Any petition under this section must be accompanied by the petition fee set forth in §1.17(f).

The pertinent portions of 37 CFR § 41.47 read as follow:

> § 41.47 Oral hearing.
> (a) An oral hearing should be requested only in those circumstances in which appellant considers such a hearing necessary or desirable for a proper presentation of the appeal. An appeal decided on the briefs without an oral hearing will receive the same consideration by the Board as appeals decided after an oral hearing.
>
> (b) If appellant desires an oral hearing, appellant must file, as a separate paper captioned "REQUEST FOR ORAL HEARING," a written request for such hearing accompanied by the fee set forth in § 41.20(b)(3) within two months from the date of the examiner's answer or supplemental examiner's answer (emphasis added).

Further, § 1209 of the MPEP states:

> § 1209 Oral Hearing
> 37 CFR 41.47(b) provides that an appellant who desires an oral hearing before the Board must request the hearing by filing, in a separate paper captioned "REQUEST FOR ORAL HEARING," a written request therefor, accompanied by the appropriate fee set forth in 37 CFR 41.20(b)(3), within 2 months after the date of the examiner's answer or supplemental examiner's answer.

> Form PTO/SB/32 may be used to request an oral hearing. This time period may only be extended by filing a request under either 37 CFR 1.136(b) or, if the appeal involves an *ex parte* reexamination proceeding, under 37 CFR 1.550(c).
>
> If the written request for an oral hearing is not filed in a separate paper captioned "REQUEST FOR ORAL HEARING," the request is improper and the appeal will be assigned for consideration and decision on the briefs without an oral hearing. Likewise, if the request is not timely filed or accompanied by the appropriate fee, the request is improper and the appeal will be assigned for consideration and decision on the briefs without an oral hearing... (emphasis added).

According to 37 CFR § 41.47(b), a proper Request for Oral Hearing is one that (1) has been filed as a separate paper captioned "REQUEST FOR ORAL HEARING;" (2) is accompanied by the fee set forth in § 41.20(b)(3) and (3) has been filed within two months from the date of the Examiner's Answer or supplemental Examiner's Answer. This rule became effective September 13, 2004. 69 Fed. Reg. 49960 (Aug. 12, 2004), reprinted in 1286 Off. Gaz. Pat. & Tm Office 21 (Sept. 7, 2004).

Petitioner admitted that he failed to timely file a Request for Oral Hearing as a separate paper, as required by 37 CFR § 41.47(b) (see Findings No. 2 and 3). In support of the petition under 37 CFR § 1.183 to suspend the rules, Petitioner argues that the granting of the petition will (1) "enable a more complete analysis of the issues on appeal in the present case" (Finding No. 5); and (2) allow "Applicants [to] have the opportunity to be available for any questions from one or more Administrative Judges considering the issues on appeal" (id.).

Petitioner has not pointed to any reason why the facts of this case present an extraordinary situation in which justice requires suspension of the rules. Petitioner's arguments do not point out why "a more complete analysis of the issues" is needed at the oral hearing.

Notwithstanding Petitioner's arguments, the Board reminds Petitioner that an appeal decided on the briefs without an oral hearing will receive the same consideration as appeals decided after an oral hearing.

Accordingly, the petition under 37 CFR § 1.183 to suspend or waive the rules to allow a personal appearance before the Board to argue the issues of this appeal at the oral hearing is DENIED.

The appeal will be assigned for consideration of the merits on the brief.

Michael R. Fleming
Chief Administrative Patent Judge
Board of Patent Appeals and Interferences

Harold C. Knetch III
3M Innovative Properties Company
Office of Intellectual Property Counsel
P.O. Box 33427
St. Paul, MN 55133-3427

SPE RESPONSE FOR CERTIFICATE OF CORRECTION

DATE 4/2/09

Paper No.: ____

TO SPE OF ART UNIT 3672

SUBJECT : Request for Certificate of Correction for Appl. No.: 10/322038 Patent No.: 7096960 B2

Please respond to this request for a certificate of correction within 7 days.

FOR IFW FILES:

Please review the requested changes/corrections as shown in the **COCIN** document(s) in the IFW application image. No new matter should be introduced, nor should the scope or meaning of the claims be changed.

Please complete the response (see below) and forward the completed response to scanning using document code **COCX**.

FOR PAPER FILES:

Please review the requested changes/corrections as shown in the attached certificate of correction. Please complete this form (see below) and forward it with the file to:

Certificates of Correction Branch (CofC)
South Tower - 9A22
Palm Location 7580

Virginia Tolbert
Certificates of Correction Branch
703-308-9390 ext. 113

Thank You For Your Assistance

The request for issuing the above-identified correction(s) is hereby:
Note your decision on the appropriate box.

- ☒ **Approved** — All changes apply.
- ☐ **Approved in Part** — Specify below which changes **do not** apply.
- ☐ **Denied** — State the reasons for denial below.

Comments: _____

/Jennifer H Gay/
SPE

3676
Art Unit

UNITED STATES PATENT AND TRADEMARK OFFICE

COMMISSIONER FOR PATENTS
UNITED STATES PATENT AND TRADEMARK OFFICE
WASHINGTON, D.C. 20231
www.uspto.gov

Paper No. 8

WOOD PHILLIPS KATZ CLARK & MORTIMER
500 W. MADISON STREET, SUITE 3800
CHICAGO, IL 60661

COPY MAILED

APR 1 0 2003

OFFICE OF PETITIONS

In re Application of :
Michael C. Thuma et al :
Application No. 10/322,047 : NOTICE
Filed: December 19, 2002 :
Attorney Docket No. HPI2590P0160US :

This is a notice regarding your request for acceptance of a fee deficiency submission under 37 CFR 1.28. On September 1, 1998, the Court of Appeals for the Federal Circuit held that 37 CFR 1.28(c) is the sole provision governing the time for correction of the erroneous payment of the issue fee as a small entity. **See DH Technology v. Synergystex International, Inc. 154 F.3d 1333, 47 USPQ2d 1865 (Fed. Cir. Sept. 1, 1998).**

The Office no longer investigates or rejects original or reissue applications under 37 CFR 1.56. **1098 Off. Gaz. Pat. Office 502 (January 3, 1989).** Therefore, nothing in this Notice is intended to imply that an investigation was done.

Your fee deficiency submission under 37 CFR 1.28 is hereby **ACCEPTED.**

Inquiries related to this communication should be directed to the Office of Petitions Staff at (703) 305-9285.

This file is being forwarded to the Office of Initial Patent Examination.

Wan Laymon
Petitions Examiner
Office of Petitions
Office of the Deputy Commissioner
for Patent Examination Policy

UNITED STATES PATENT AND TRADEMARK OFFICE

Commissioner for Patents
United States Patent and Trademark Office
P.O. Box 1450
Alexandria, VA 22313-1450
www.uspto.gov

STEPHEN B. DAVIS
BRISTOL-MYERS SQUIBB COMPANY
P.O. BOX 4000
PRINCETON, NJ 08543-4000

COPY MAILED

OCT 2 8 2004

OFFICE OF PETITIONS

In re Application of :
Mark E. Salvati et al :
Application No. 10/322,077 : ON PETITION
Filed: December 18, 2002 :
Attorney Docket No. LD192B (CIP) :

This is a decision on the petition under 37 CFR 1.313(c), filed October 26, 2004, which is being treated under 37 CFR 1.313(c)(3) to withdraw the above-identified application from issue after payment of the issue fee.

The petition is **GRANTED**.

The above-identified application is withdrawn from issue for express abandonment in favor of a continuing application. See 37 CFR 1.313(c)(3).

The application is hereby withdrawn from issue, and the abandonment is hereby recognized.

Telephone inquiries should be directed to Wan Laymon at (703) 306-5685.

This matter is being referred to Files Repository.

Wan Laymon
Petitions Examiner
Office of Petitions
Office of the Deputy Commissioner
for Patent Examination Policy

UNITED STATES PATENT AND TRADEMARK OFFICE

Commissioner for Patents
United States Patent and Trademark Office
P.O. Box 1450
Alexandria, VA 22313-1450
www.uspto.gov

LOUIS J. WILLE
BRISTOL-MYERS SQUIBB COMPANY
PATENT DEPARTMENT
P O BOX 4000
PRINCETO,N NJ 08543-4000

COPY MAILED

MAR 0 7 2007

OFFICE OF PETITIONS

In re Application of	:	
Salvati et al.	:	
Application No. 10/322077	:	DECISION ON PETITION
Filing or 371(c) Date: 12/18/2002	:	UNDER 37 CFR 1.78(a)(6)
Attorney Docket No. LD0192B (CIP)	:	

This is a decision on the petition under 37 CFR 1.78(a)(6), filed October 2, 2006, to accept an unintentionally delayed claim under 35 U.S.C. § 119(e) for the benefit of priority to the prior-filed provisional applications set forth in the amendment filed with the present petition.

The petition is **GRANTED**.

A petition for acceptance of a claim for late priority under 37 CFR 1.78(a)(6) is only applicable to those applications filed on or after November 29, 2000. Further, the petition is appropriate only after the expiration of the period specified in 37 CFR 1.78(a)(5)(ii). In addition, the petition under 37 CFR 1.78(a)(6) must be accompanied by:

(1) the reference required by 35 U.S.C. § 119 and 37 CFR 1.78(a)(5)(i) of the prior-filed application, unless previously submitted;
(2) the surcharge set forth in § 1.17(t); and
(3) a statement that the entire delay between the date the claim was due under 37 CFR 1.78(a)(5)(ii) and the date the claim was filed was unintentional. The Director may require additional information where there is a question whether the delay was unintentional.

All the above requirements having been satisfied, the late claim for priority under 35 U.S.C. § 119 is accepted as being unintentionally delayed.

The granting of the petition to accept the delayed benefit claim to the prior-filed applications under 37 CFR 1.78(a)(6) should not be construed as meaning that this application is entitled

to the benefit of the prior-filed applications. In order for this application to be entitled to the benefit of the prior-filed applications, all other requirements under 35 U.S.C. § 119 and 37 CFR 1.78(a)(4) and (a)(5) must be met. Similarly, the fact that the corrected Filing Receipt accompanying this decision on petition includes the prior-filed applications should not be construed as meaning that applicant is entitled to the claim for benefit of priority to the prior-filed applications noted thereon. Accordingly, the examiner will, in due course, consider this benefit claim and determine whether the application is entitled to the benefit of the earlier filing date.

A corrected Filing Receipt, which includes the priority claim to the prior-filed provisional applications, accompanies this decision on petition.

Any inquiries concerning this decision may be directed to Derek Woods at (571) 272-3232. All other inquiries concerning either the examination procedures or status of the application should be directed to the Technology Center.

This application is being forwarded to Technology Center Art Unit 1626 for appropriate action on the amendment filed October 2, 2006, including consideration by the examiner of applicant's entitlement to claim benefit of priority under 35 U.S.C. § 119 to the prior-filed application.

Christina Tartera Donnell

Christina T. Donnell
Senior Petitions Attorney
Office of Petitions

ATTACHMENT: Corrected Filing Receipt

UNITED STATES PATENT AND TRADEMARK OFFICE

UNITED STATES DEPARTMENT OF COMMERCE
United States Patent and Trademark Office
Address: COMMISSIONER FOR PATENTS
P.O. Box 1450
Alexandria, Virginia 22313-1450
www.uspto.gov

APPL NO.	FILING OR 371(c) DATE	ART UNIT	FIL FEE REC'D	ATTY.DOCKET NO	TOT CLMS	IND CLMS
10/322,077	12/18/2002	1626	2008	LD0192B (CIP)	26	9

CONFIRMATION NO. 9948

CORRECTED FILING RECEIPT

OC000000022772846

23914
LOUIS J. WILLE
BRISTOL-MYERS SQUIBB COMPANY
PATENT DEPARTMENT
P O BOX 4000
PRINCETON, NJ 08543-4000

Date Mailed: 03/07/2007

Receipt is acknowledged of this regular Patent Application. It will be considered in its order and you will be notified as to the results of the examination. Be sure to provide the U.S. APPLICATION NUMBER, FILING DATE, NAME OF APPLICANT, and TITLE OF INVENTION when inquiring about this application. Fees transmitted by check or draft are subject to collection. Please verify the accuracy of the data presented on this receipt. **If an error is noted on this Filing Receipt, please mail to the Commissioner for Patents P.O. Box 1450 Alexandria Va 22313-1450. Please provide a copy of this Filing Receipt with the changes noted thereon. If you received a "Notice to File Missing Parts" for this application, please submit any corrections to this Filing Receipt with your reply to the Notice. When the USPTO processes the reply to the Notice, the USPTO will generate another Filing Receipt incorporating the requested corrections (if appropriate).**

Applicant(s)

Mark E. Salvati, Lawrenceville, NJ;
James Aaron Balog, Lambertville, NJ;
Dacia A. Pickering, Lawrenceville, NJ;
Soren Giese, New Hope, PA;
Aberra Fura, Lawrenceville, NJ;
Wenying Li, Middletown, CT;
Ramesh N. Patel, Bridgewater, NJ;
Ronald L. Hanson, Morris Plains, NJ;
Toomas Mitt, Plainsboro, NJ;
Jacques Y. Roberge, Princeton, NJ;
James R. Corte, Lawrenceville, NJ;
Steven H. Spergel, Warrington, PA;
Richard A. Rampulla, Flemington, NJ;
Raj N. Misra, Hopewell, NJ;
Hai-Yun Xiao, Princeton, NJ;

Power of Attorney: The patent practitioners associated with Customer Number **23914**.

Domestic Priority data as claimed by applicant

This application is a CIP of 10/025,116 12/19/2001 ABN
which is a CIP of 09/885,381 06/20/2001 ABN
which claims benefit of 60/233,519 09/19/2000
and claims benefit of 60/284,730 04/18/2001
and claims benefit of 60/284,438 04/18/2001
This application 10/322,077

is a CIP of 09/885,827 06/20/2001 PAT 6,960,474
which claims benefit of 60/284,617 04/18/2001
and claims benefit of 60/214,392 06/28/2000
and claims benefit of 60/233,519 09/19/2000
and claims benefit of 60/284,438 04/18/2001
and claims benefit of 60/284,730 04/18/2001

Foreign Applications

If Required, Foreign Filing License Granted: 03/14/2003

The country code and number of your priority application, to be used for filing abroad under the Paris Convention, is US10/322,077

Projected Publication Date: Not Applicable

Non-Publication Request: No

Early Publication Request: No

Title

FUSED HETEROCYCLIC SUCCINIMIDE COMPOUNDS AND ANALOGS THEREOF, MODULATORS OF NUCLEAR HORMONE RECEPTOR FUNCTION

Preliminary Class

514

PROTECTING YOUR INVENTION OUTSIDE THE UNITED STATES

Since the rights granted by a U.S. patent extend only throughout the territory of the United States and have no effect in a foreign country, an inventor who wishes patent protection in another country must apply for a patent in a specific country or in regional patent offices. Applicants may wish to consider the filing of an international application under the Patent Cooperation Treaty (PCT). An international (PCT) application generally has the same effect as a regular national patent application in each PCT-member country. The PCT process **simplifies** the filing of patent applications on the same invention in member countries, but **does not result** in a grant of "an international patent" and does not eliminate the need of applicants to file additional documents and fees in countries where patent protection is desired.

Almost every country has its own patent law, and a person desiring a patent in a particular country must make an application for patent in that country in accordance with its particular laws. Since the laws of many countries differ in various respects from the patent law of the United States, applicants are advised to seek guidance from specific foreign countries to ensure that patent rights are not lost prematurely.

Applicants also are advised that in the case of inventions made in the United States, the Director of the USPTO must issue a license before applicants can apply for a patent in a foreign country. The filing of a U.S. patent application serves as a request for a foreign filing license. The application's filing receipt contains further information and guidance as to the status of applicant's license for foreign filing.

Applicants may wish to consult the USPTO booklet, "General Information Concerning Patents" (specifically, the section entitled "Treaties and Foreign Patents") for more information on timeframes and deadlines for filing foreign patent applications. The guide is available either by contacting the USPTO Contact Center at 800-786-9199, or it can be viewed on the USPTO website at http://www.uspto.gov/web/offices/pac/doc/general/index.html.

For information on preventing theft of your intellectual property (patents, trademarks and copyrights), you may wish to consult the U.S. Government website, http://www.stopfakes.gov. Part of a Department of Commerce initiative, this website includes self-help "toolkits" giving innovators guidance on how to protect intellectual property in specific countries such as China, Korea and Mexico. For questions regarding patent enforcement issues, applicants may call the U.S. Government hotline at 1-866-999-HALT (1-866-999-4158).

LICENSE FOR FOREIGN FILING UNDER
Title 35, United States Code, Section 184
Title 37, Code of Federal Regulations, 5.11 & 5.15

GRANTED

The applicant has been granted a license under 35 U.S.C. 184, if the phrase "IF REQUIRED, FOREIGN FILING LICENSE GRANTED" followed by a date appears on this form. Such licenses are issued in all applications where the conditions for issuance of a license have been met, regardless of whether or not a license may be required as set forth in 37 CFR 5.15. The scope and limitations of this license are set forth in 37 CFR 5.15(a) unless an earlier license has been issued under 37 CFR 5.15(b). The license is subject to revocation upon written notification. The date indicated is the effective date of the license, unless an earlier license of similar scope has been granted under 37 CFR 5.13 or 5.14.

This license is to be retained by the licensee and may be used at any time on or after the effective date thereof unless it is revoked. This license is automatically transferred to any related applications(s) filed under 37 CFR 1.53(d). This license is not retroactive.

The grant of a license does not in any way lessen the responsibility of a licensee for the security of the subject matter as imposed by any Government contract or the provisions of existing laws relating to espionage and the national security or the export of technical data. Licensees should apprise themselves of current regulations especially with respect to certain countries, of other agencies, particularly the Office of Defense Trade Controls, Department of State (with respect to Arms, Munitions and Implements of War (22 CFR 121-128)); the Bureau of Industry and Security, Department of Commerce (15 CFR parts 730-774); the Office of Foreign Assets Control, Department of Treasury (31 CFR Parts 500+) and the Department of Energy.

NOT GRANTED

No license under 35 U.S.C. 184 has been granted at this time, if the phrase "IF REQUIRED, FOREIGN FILING LICENSE GRANTED" DOES NOT appear on this form. Applicant may still petition for a license under 37 CFR 5.12, if a license is desired before the expiration of 6 months from the filing date of the application. If 6 months has lapsed from the filing date of this application and the licensee has not received any indication of a secrecy order under 35 U.S.C. 181, the licensee may foreign file the application pursuant to 37 CFR 5.15(b).

UNITED STATES PATENT AND TRADEMARK OFFICE

Commissioner for Patents
United States Patent and Trademark Office
P.O. Box 1450
Alexandria, VA 22313-1450
www.uspto.gov

GREGORY SMITH & ASSOCIATES
SUITE 317
3900 NEWPARK MALL ROAD
NEWARK CA 94560

MAILED

APR 14 2010

OFFICE OF PETITIONS

In re Application of :
Morency et al. :
Application No. 10/322,079 : DECISION ON PETITION
Filed: December 17, 2002 :
Attorney Docket No. 349-1075U :

This is a decision on the petition under 37 CFR 1.137(b), filed February 18, 2010 revive the above-identified application.

The petition is **DISMISSED**.

Any request for reconsideration of this decision must be submitted within TWO (2) MONTHS from the mail date of this decision. Extensions of time under 37 CFR 1.136(a) are permitted. The reconsideration request should include a cover letter entitled "Renewed Petition under 37 CFR 1.137(b)." This is **not** a final agency action within the meaning of 5 U.S.C. § 704.

The above-identified application became abandoned for failure to rely in a timely manner to the non-final Office action mailed January 22, 2009, which set a shortened statutory period for reply of three (3) months. No extensions of time under the provisions of 37 CFR 1.136(a) were obtained. Accordingly, by operation of law, the above-identified application became abandoned on April 23, 2009. A Notice of Abandonment was mailed August 13, 2009.

A grantable petition under 37 CFR 1.137(b) must be accompanied by: (1) the required reply; (2) the petition fee as set forth in 37 CFR 1.17(m); (3) a statement that the entire delay in filing the required reply from the due date for the reply until the filing of a grantable petition pursuant to 37 CFR 1.137(b) was unintentional; and (4) any terminal disclaimer (and fee as set forth in 37 CFR 1.20(d)) required by 37 CFR 1.137(d). Where there is a question as to whether either the abandonment or the delay in filing a petition under 37 CFR 1.137 was unintentional, the Commissioner may require additional information. See MPEP 711.03(c)(III)(C) and (D).

The instant petition lacks item (1). Petitioner has failed to submit an amendment in response to the non-final Office action mailed January 22, 2009.

Further correspondence with respect to this matter should be addressed as follows:

By Mail:
Mail Stop PETITION
Commissioner for Patents
P. O. Box 1450
Alexandria, VA 22313-1450

By hand:
U. S. Patent and Trademark Office
Customer Service Window, Mail Stop Petitions
Randolph Building
401 Dulany Street
Alexandria, VA 22314

The centralized facsimile number is **(571) 273-8300.**

Telephone inquiries concerning this decision should be directed to the undersigned at (571) 272-7751.

Joan Olszewski
Petitions Examiner
Office of Petitions

UNITED STATES PATENT AND TRADEMARK OFFICE

Commissioner for Patents
United States Patent and Trademark Office
P.O. Box 1450
Alexandria, VA 22313-1450
www.uspto.gov

GREGORY SMITH & ASSOCIATES
SUITE 317
3900 NEWPARK MALL ROAD
NEWARK CA 94560

MAILED

JUL 07 2010

OFFICE OF PETITIONS

In re Application of	:	
Morency et al.	:	
Application No. 10/322,079	:	DECISION ON PETITION
Filed: December 17, 2002	:	
Attorney Docket No. 349-1075U	:	

This is a decision on the renewed petition under the unintentional provisions of 37 CFR 1.137(b), filed June 18, 2010, to revive the above-identified application.

The petition is **GRANTED**.

This application became abandoned for failure to reply in a timely manner to the non-final Office action mailed January 22, 2009. No extensions of time under the provisions of 37 CFR 1.136(a) were obtained. Accordingly, this application became abandoned on April 23, 2009. A Notice of Abandonment was mailed on August 13, 2009.

The petition satisfies the requirements of 37 CFR 1.137(b) in that petitioner has supplied (1) the reply in the form of a Notice of Appeal and fee of $270.00; (2) the petition fee of $810.00 (previously submitted February 18, 2010); and (3) a proper statement of unintentional delay.

The two-month period for filing an appeal brief under 37 CFR 41.37 (accompanied by the fee required by 37 CFR 41.20(b)(2)), runs from the date of this decision.

Telephone inquiries concerning this decision should be directed to the undersigned at (571) 272-7751.

This application is being referred to Technology Center AU 3773 to await the filing of an appeal brief or for such other appropriate reply as may be submitted to continue prosecution of the application.

Joan Olszewski
Petitions Examiner
Office of Petitions

UNITED STATES PATENT AND TRADEMARK OFFICE

COMMISSIONER FOR PATENTS
UNITED STATES PATENT AND TRADEMARK OFFICE
P.O. BOX 1450
ALEXANDRIA, VA 22313-1450
WWW.USPTO.GOV
AMB

Paper No. 4

Patent Documentation Center
Xerox Corporation
Xerox Square 20th Floor
100 Clinton Ave. S.
Rochester, NY 14644

COPY MAILED

SEP 04 2003

OFFICE OF PETITIONS

In re Application of :
Bloemen :
Application No. 10/322,114 : ON PETITION
Filed: December 17, 2002 :
Attorney Docket No.: D/A2387 :

This decision in response to the petition filed March 18, 2003 in response to the "Notice of Incomplete Nonprovisional Application ("Notice") mailed February 6, 2003 to accord the above-identified application a filing date of December 17, 2002.

The application was filed December 17, 2002. The Notice mailed February 6, 2003 by the Office of Initial Patent Examination notified applicant that the application had not been accorded a filing date as the application appeared to have been deposited without drawings as required under 35 USC 113.

In response, the present petition was filed wherein petitioner argues that the application as deposited included six (6) sheets of drawings. Petitioner has included as proof of mailing and proof of receipt of the referenced drawings a return postcard date stamped by the Office on December 17, 2002. A copy of the original drawing sheets purportedly filed with the application on December 17, 2002 was also supplied.

The original drawing sheets submitted with the application papers have not been located. However, in view of the evidence presented, the petition to accord the application a filing date of December 17, 2002 is GRANTED.

Since the original drawing sheets cannot be located in the Office, the copy supplied with the instant petition will be used for examination purposes.

No petition fee is due in connection with this matter.

This application will be returned to the Office of Initial Patent Examination for further processing with a filing date of December 17, 2002.

Telephone inquiries related to this decision may be directed to the undersigned at (703) 305-0310.

Alesia M. Brown
Senior Petitions Attorney
Office of Petitions

UNITED STATES PATENT AND TRADEMARK OFFICE

Commissioner for Patents
United States Patent and Trademark Office
P.O. Box 1450
Alexandria, VA 22313-1450
www.uspto.gov

EI DU PONT DE NEMOURS AND COMPANY
LEGAL PATENT RECORDS CENTER
BARLEY MILL PLAZA 25/1128
4417 LANCASTER PIKE
WILMINGTON DE 19805

COPY MAILED

JUN 13 2007

OFFICE OF PETITIONS

In re Application of :
Shin Hyunkook :
Application No. 10/322,145 : DECISION GRANTING PETITION
Filed: December 18, 2002 : UNDER 37 CFR 1.137(b)
Attorney Docket No. TK3750 US NA :

This is a decision on the petition under 37 CFR 1.137(b), filed February 6, 2007, to revive the above-identified application.

The petition is **GRANTED**.

The petition satisfies the conditions for revival pursuant to the provisions of 37 CFR 1.137(b) in that (1) the reply in the form of an Appeal Brief; (2) the petition fee; and (3) the required statement of unintentional delay have been received. Accordingly, the reply is accepted as having been unintentionally delayed.

Telephone inquiries concerning this decision should be directed to the undersigned at (571) 272-3208.

This matter is being referred to Technology Center AU 1714.

Karen Creasy

Karen Creasy
Petitions Examiner
Office of Petitions

UNITED STATES PATENT AND TRADEMARK OFFICE

Commissioner for Patents
United States Patent and Trademark Office
P.O. Box 1450
Alexandria, VA 22313-1450
www.uspto.gov

RICHARD D. CLARKE
LAW OFFICE OF RICHARD D. CLARKE
3755 AVOCADO BLVD., #1000
LA MESA, CA 91941-7301

COPY MAILED

FEB 0 1 2005

OFFICE OF PETITIONS

In re Application of	:	
Bryon Benini	:	
Application No. 10/322,170	:	ON PETITION
Filed: December 17, 2002	:	
Attorney Docket No. 03-DYE/103	:	

This is a decision on the petition under 37 CFR 1.137(b), filed January 10, 2005, to revive the above-identified application.

The petition is **GRANTED**.

The above-identified application became abandoned for failure to reply in a timely manner to the Notice to File Missing Parts of Nonprovisional Application (Notice) mailed January 30, 2003. The Notice set a period for reply of two (2) months from the mail date of the Notice. No extensions of time under the provisions of 37 CFR 1.136(a) were obtained. Accordingly, the above-identified application became abandoned on March 31, 2003.

The Revocation of Power of Attorney and Appointment of New Power of Attorney filed January 10, 2005 has been entered and made of record.

Telephone inquiries concerning this decision should be directed to Wan Laymon at (571) 272-3220.

This matter is being referred to the Office of Initial Patent Examination.

Wan Laymon
Petitions Examiner
Office of Petitions
Office of the Deputy Commissioner
for Patent Examination Policy

Attachments: Notice Regarding Change of Power of Attorney
Notice of Acceptance of Power of Attorney

UNITED STATES PATENT AND TRADEMARK OFFICE

Commissioner for Patents
United States Patent and Trademark Office
P.O. Box 1450
Alexandria, VA 22313-1450
www.uspto.gov

AUG 15 2006

BOLESH J. SKUTNIK
CERAMOPTEC INDUSTRIES, INC.
515 SHAKER RD.
EAST LONGMEADOW MA 01028

In re Application of :
Wolfgang Neuberger :
Appl. No. 10/322,180 :
Filed: December 18, 2002 :
For: MEDICAL DEVICE RECOGNITION :
SYSTEM WITH WRITE-BACK FEATURE :

DECISION ON PETITION UNDER 37 CFR 1.181

This is in response to Applicant's Petition under 37 CFR 1.181 filed on December 13, 2005 to request a review of the first action final rejection mailed on June 30, 2005.

The petition is dismissed.

The above application was filed on December 18, 2002 and a final rejection was mailed on March 2, 2005. Examiner rejected all claims under 35 U.S.C. 103(a) on grounds that they were obvious in view of either Denen et al or Fuller et al in view of Black et al. After Petitioner filed an amendment on April 1, 2005, Examiner sent an advisory action on April 14, 2005 to inform Petitioner that his amendments would not be entered as they raised new matter. Accordingly, Petitioner filed a Request for Continuing Examination (RCE) on May 25, 2005 with a new limitation and removed the alleged new matter limitation from the amended claims filed on April 1, 2005. Examiner then set forth a first action final rejection on June 30, 2005.

Petitioner asserts that the first action final rejection was premature because the new claims were not drawn to the same invention, and therefore, the claims would not have been rejected in a pursuing office action had they been entered in the earlier application. Specifically, Petitioner contends that the amendment submitted for Claim 1, which specified that the transponder transmit information by means of radio frequency waves in free space, altered the invention such that the references of record no longer rendered the claims obvious. Accordingly, Petitioner asserts that the finality of the first action rejection should be withdrawn and a new search provided.

The comparison of Claim 1 submitted before the RCE to Claim 1 submitted with the RCE shows that the claims remain directed to a medical radiation treatment system comprised of a recognition/controlling unit and a transponder for transmitting information by means of an antenna. Although the pre-RCE Claim 1 had a negative limitation requiring transmission without

the need "for physical, optical or electrical contact," Examiner was still able to reject the claim by using the same references that taught the device and method with the use of an antenna to meet the new limitation. Moreover, an antenna was employed in the original final rejection in the pre-RCE Claim 1 so that no new grounds of rejection for a new claim limitation requiring a non-final rejection in the RCE is seen. Thus, the claims filed with the RCE were properly rejected in accordance with MPEP 706.07(b):

> The claims of a new application may be finally rejected in the first Office action in those situations where (A) the new application is a continuing application of, or a substitute for, an earlier application, and (B) all claims of the new application (1) are drawn to the same invention claimed in the earlier application, and (2) would have been properly finally rejected on the grounds and art of record in the next Office action if they had been entered in the earlier application.

Contrary to Petitioner's assertions regarding the presentation of a different invention, it is to be noted that the claims in an RCE must be drawn to the same previously examined invention. See MPEP 706.07(h). Limitations to that invention may be added or deleted, but whether such limitations necessitate a new ground of rejection would depend on what the previous applied prior art teaches. In this case, the previously applied prior art teaches the claimed invention and an amendment after final was not refused entry due to any limitations now appearing in the provided submission in the RCE.

In addition, aside from any relief sought by Petitioner, the petition is actually untimely because it was not filed within two months of the first action final rejection in accordance with 37 CFR 1.181(f):

> The mere filing of a petition will not stay any period for reply that may be running against the application, nor act as a stay of other proceedings. Any petition under this part not filed within two months of the mailing date of the action or notice from which relief is requested may be dismissed as untimely, except as otherwise provided. This two-month period is not extendable.

Petitioner requested relief from the finality of the office action mailed June 30, 2005; however, Petitioner filed the petition on December 13, 2005. Furthermore, as stated in the above provision, a petition does not "stay any period for reply that may be running against the application," and therefore, the application is also considered abandoned because a proper, timely response to the first action final rejection was not entered within the shortened statutory period.

In summary, Petitioner's request to withdraw the finality of the first action final rejection is dismissed for being moot and untimely.

PETITION DISMISSED.

Any questions regarding this decision should be directed to Special Program Examiner Allan N. Shoap at 571-272-4514.

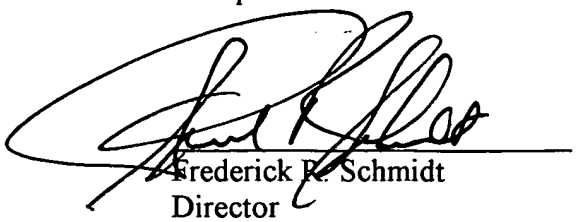

Frederick R. Schmidt
Director
Technology Center 3700

UNITED STATES PATENT AND TRADEMARK OFFICE

Commissioner for Patents
United States Patent and Trademark Office
P.O. Box 1450
Alexandria, VA 22313-1450
www.uspto.gov

Marc A. Brockhaus
Dunlap, Codding & Rogers, P.C.
1601 NW Expressway, Suite 1000
Oklahoma City, OK 73118

COPY MAILED

OCT 12 2004

OFFICE OF PETITIONS

In re Patent No. 6,754,585	:	
Issue Date: June 22, 2004	:	
Application No. 10/322,187	:	NOTICE
Filed: December 16, 2004	:	
Attorney Docket No. 8379.004	:	

This is a notice regarding your request for acceptance of a fee deficiency submission under 37 CFR 1.28. On September 1, 1998, the Court of Appeals for the Federal Circuit held that 37 CFR 1.28(c) is the sole provision governing the time for correction of the erroneous payment of the issue fee as a small entity. **See DH Technology v. Synergystex International, Inc. 154 F.3d 1333, 47 USPQ2d 1865 (Fed. Cir. Sept. 1, 1998).**

The Office no longer investigates or rejects original or reissue applications under 37 CFR 1.56. **1098 Off. Gaz. Pat. Office 502 (January 3, 1989)**. Therefore, nothing in this Notice is intended to imply that an investigation was done.

Your fee deficiency submission under 37 CFR 1.28 is hereby **ACCEPTED**.

This file is being referred to the Files Repository.

Inquiries related to this communication should be directed to the undersigned at (571) 272-3226.

Andrea Smith
Petitions Examiner
Office of Petitions
Office of the Deputy Commissioner
for Patent Examination Policy

UNITED STATES PATENT AND TRADEMARK OFFICE

Commissioner for Patents
United States Patent and Trademark Office
P.O. Box 1450
Alexandria, VA 22313-1450
www.uspto.gov

LEE HONG DEGERMAN KANG & SCHMADEKA
801 S FIGUEROA STREET
12TH FLOOR
LOS ANGELES CA 90017

COPY MAILED

MAR 2 6 2007

OFFICE OF PETITIONS

In re Application of :
Tae-Kyu Choi :
Application No. 10/322,204 : ON PETITION
Filed: December 17, 2002 :
Attorney Docket No. 2060-3-33 :

This is a decision on the petition to revive under 37 CFR 1.137(b), filed February 2, 2007.

The petition under 37 CFR 1.137(b) is **GRANTED**.

The above-identified application became abandoned for failure to timely file a reply in response to the non-final Office action mailed September 23, 2005. This Office action set an extendable period for reply of three (3) months. No reply having been received, the application became abandoned on December 24, 2005. A Notice of Abandonment was mailed on December 13, 2006.

With the instant petition, applicant paid the petition fee, made the proper statement of unintentional delay, and submitted the required reply in the form of an Amendment.

The matter is being forwarded to Group Art Unit 2618 for consideration of the Amendment filed February 2, 2007.

Telephone inquiries concerning this decision should be directed to the undersigned at (571)272-3207.

Cliff Congo
Petitions Attorney
Office of Petitions

UNITED STATES PATENT AND TRADEMARK OFFICE

Commissioner for Patents
United States Patent and Trademark Office
P.O. Box 1450
Alexandria, VA 22313-1450
www.uspto.gov

INTEL/BSTZ
BLAKELY SOKOLOFF TAYLOR & ZAFMAN LLP
1279 OAKMEAD PARKWAY
SUNNYVALE CA 94085-4040

COPY MAILED

FEB 0 3 2009

OFFICE OF PETITIONS

In re Application of :
Peroor K. Sebastian et al :
Application No.10/322,244 : DECISION ON PETITION
Filed: December 17, 2002 :
Attorney Docket No. 42P15395XD2 :

This is a decision on the petition under the unintentional provisions of 37 CFR 1.137(b), filed December 16, 2008, to revive the above-identified application.

The petition is **GRANTED**.

The petition satisfies the conditions for revival pursuant to the provisions of 37 CFR 1.137(b) in that (1) the reply in the form of an amendment and terminal disclaimer; (2) the petition fee; and (3) the required statement of unintentional delay have been received. Accordingly, the reply to the nonfinal rejection mailed May 15, 2007, is accepted as having been unintentionally delayed.

Telephone inquiries concerning this decision should be directed to the undersigned at (571) 272-3208.

This application is being referred to Technology Center AU 2616 for appropriate action by the Examiner in the normal course of business on the reply received December 16, 2008.

Karen Creasy
Petitions Examiner
Office of Petitions

UNITED STATES PATENT AND TRADEMARK OFFICE

UNITED STATES DEPARTMENT OF COMMERCE
United States Patent and Trademark Office
Address: COMMISSIONER FOR PATENTS
P.O. Box 1450
Alexandria, Virginia 22313-1450
www.uspto.gov

INTEL/BSTZ
BLAKELY SOKOLOFF TAYLOR & ZAFMAN LLP
1279 OAKMEAD PARKWAY
SUNNYVALE, CA 94085-4040

Mail Date: 04/21/2010

Applicant	: Peroor K. Sebastian	: DECISION ON REQUEST FOR
Patent Number	: 7606204	: RECALCULATION of PATENT
Issue Date	: 10/20/2009	: TERM ADJUSTMENT IN VIEW
Appliction No	: 10/322,244	: OF WYETH AND NOTICE OF INTENT TO
Filed	: 12/17/2002	: ISSUE CERTIFICATE OF CORRECTION
		:

The Request for Recalculation is **GRANTED** to the extent indicated.

The patent term adjustment has been determined to be **1874** days. The USPTO will *sua sponte* issue a certificate of correction reflecting the amount of PTA days determined by the recalculation.

Prior to the issuance of the certificate of correction, the USPTO will afford patentee an opportunity to be heard and request reconsideration. Accordingly, patentee has **one month or thirty (30) days**, whichever is longer, to file a request for reconsideration of this patent term adjustment calculation. See 35 U.S.C. 154(b)(3)(B)(ii) and 37 CFR 1.322(a)(4). No extensions of time will be granted under 37 CFR 1.136.

Patentee should use document code PET.OP if electronically filing a request for reconsideration of this patent term adjustment calculation. The patentee must also include the information required by 37 CFR 1.705(b)(2) and the fee required by 37 CFR 1.18(e). If patentee does not file a timely request for reconsideration of this patent term adjustment calculation including the information required by 37 CFR 1.705(b)(2) and the fee required by 37 CFR 1.18(e), the USPTO will issue a certificate of correction reflecting the PTA determination noted above.

Patentee should be aware that in order to preserve the right to review in the United States District Court for the District of Columbia of the USPTO patent term adjustment determination, patentee must ensure that he or she also take the steps required under 35 U.S.C. 154(b)(4)(A) in a timely manner. Nothing in the request for recalculation should be construed as providing an alternative time frame for commencing a civil action under 35 U.S.C. 154(b)(4)(A).

Any questions concerning this decision should be directed to the Office of Patent Legal Administration at 571-272-7702.

UNITED STATES PATENT AND TRADEMARK OFFICE

Commissioner for Patents
United States Patent and Trademark Office
P.O. Box 1450
Alexandria, VA 22313-1450
www.uspto.gov

WOMBLE CARLYLE SANDRIDGE & RICE PPLC
CHEVRON PHILLIPS CHEMICAL COMPANY
P.O. BOX 7037
ATLANTA, GA 30357-0037

COPY MAILED

MAY 1 2 2005

OFFICE OF PETITIONS

In re Application of :
David R. Battiste et al :
Application No. 10/322,247 :
Filed: December 17, 2002 :
Attorney Docket No. 51757-0411 (51757-280678) :

ON PETITION

This is a decision on the petition under 37 CFR 1.313(c)(2), filed May 11, 2005, to withdraw the above-identified application from issue after payment of the issue fee.

The petition is **GRANTED**.

The above-identified application is withdrawn from issue for consideration of a submission under 37 CFR 1.114 (request for continued examination). See 37 CFR 1.313(c)(2).

Petitioner is advised that the issue fee paid on January 26, 2005 in the above-identified application cannot be refunded. If, however, the above-identified application is again allowed, petitioner may request that it be applied towards the issue fee required by the new Notice of Allowance.[1]

Telephone inquiries should be directed to Wan Laymon at (571) 272-3220.

This matter is being referred to Technology Center AU 1714 for processing of the request for continued examination under 37 CFR 1.114 and for consideration of the concurrently filed IDS.

Wan Laymon
Petitions Examiner
Office of Petitions
Office of the Deputy Commissioner
for Patent Examination Policy

[1] The request to apply the issue fee to the new Notice may be satisfied by completing and returning the new Issue Fee Transmittal Form PTOL-85(b), which includes the following language thereon: "Commissioner for Patents is requested to apply the Issue Fee and Publication Fee (if any) or re-apply any previously paid issue fee to the application identified above." Petitioner is advised that, whether a fee is indicated as being due or not, the Issue Fee Transmittal Form **must** be completed and timely submitted to avoid abandonment. Note the language in bold text on the first page of the Notice of Allowance and Fee(s) Due (PTOL-85).

UNITED STATES PATENT AND TRADEMARK OFFICE

Commissioner for Patents
United States Patent and Trademark Office
P.O. Box 1450
Alexandria, VA 22313-1450
www.uspto.gov

WOODCOCK WASHBURN LLP
CIRA CENTRE, 12TH FLOOR
2929 ARCH STREET
PHILADELPHIA, PA 19104-289

MAILED

MAR 06 2009

OFFICE OF PETITIONS

In re Application of :
Robert W. Saxon, et. al. :
Application No. 10/322,253 : DECISION ON PETITION
Filed: December 18, 2002 : TO WITHDRAW
Attorney Docket No. BE1-0087US : FROM RECORD
:

This is a decision on the Request to Withdraw as attorney or agent of record under 37 C.F.R. § 1.36(b), filed August 9, 2005.

The request is **NOT APPROVED** because it is moot.

A review of the file record indicates that the power of attorney WOODCOCK WASHBURN LLP has been revoked by the assignee of the patent application on June 8, 2006. Accordingly, the request to withdraw under 37 CFR 1.36(b) is moot.

All future communications from the Office will continue to be directed to the below-listed address until otherwise notified by applicant.

Telephone inquiries concerning this decision should be directed to Denise Williams at 571-272-8930.

Carl Friedman
Petitions Examiner
Office of Petitions

cc: LEE & HAYES, PLLC
601 W. RIVERSIDE AVENUE
SUITE 1400
SPOKANE WA 99201

UNITED STATES PATENT AND TRADEMARK OFFICE

Commissioner for Patents
United States Patent and Trademark Office
P.O. Box 1450
Alexandria, VA 22313-1450
www.uspto.gov
DIW 05-04

PHILIP H. BURRUS, IV
MOTOROLA, INC. - LAW DEPARTMENT
1700 BELLE MEADE COURT
LAWRENCEVILLE GA 30043

COPY MAILED

SEP 15 2004

OFFICE OF PETITIONS

In re Application of	:	
Bohne et al.	:	
Application No. 10/322,263	:	ON PETITION
Filed: 17 December, 2002	:	
Att'y Docket No. EN11393	:	

This is a decision on the petition under 1.137(b),[1] filed on 23 10 August, 2004, to revive the above-identified application.

The petition is **GRANTED**.

This application became abandoned on 23 April, 2004, for failure to timely submit corrected drawings as as required by the Notice

---

[1]Effective December 1, 1997, the provisions of 37 CFR 1.137(b) now provide that where the delay in reply was unintentional, a petition may be filed to revive an abandoned application or a lapsed patent pursuant to 37 CFR 1.137(b). A grantable petition filed under the provisions of 37 CFR 1.137(b) must be accompanied by:

(1) the required reply, unless previously filed. In a nonprovisional application abandoned for failure to prosecute, the required reply may be met by the filing of a continuing application. In a nonprovisional application filed on or after June 8, 1995, and abandoned for failure to prosecute, the required reply may also be met by the filing of a request for continued examination in compliance with § 1.114. In an application or patent, abandoned or lapsed for failure to pay the issue fee or any portion thereof, the required reply must be the payment of the issue fee or any outstanding balance thereof. In an application abandoned for failure to pay the publication fee, the required reply must include payment of the publication fee.

(2) the petition fee as set forth in 37 CFR 1.17(m);

(3) a statement that the entire delay in filing the required reply from the due date for the reply until the filing of a grantable petition pursuant to 37 CFR 1.137(b) was unintentional. The Commissioner may required additional information where there is a question whether the delay was unintentional; and

(4) any terminal disclaimer (and fee as set forth in 37 CFR 1.20(d)) required pursuant to 37 CFR 1.137(c)).

of Allowability mailed on 22 January, 2004, which set a three (3) month statutory period for reply. The filing of the present petition precedes the mailing of Notice of Abandonment.

The application file is being forwarded to Publishing Division for processing into a patent.

Telephone inquiries concerning this matter may be directed to the undersigned at (703)308-6918.

D Wood

Douglas I. Wood
Senior Petitions Attorney
Office of Petitions

UNITED STATES PATENT AND TRADEMARK OFFICE

Commissioner for Patents
United States Patent and Trademark Office
P.O. Box 1450
Alexandria, VA 22313-1450
www.uspto.gov

JUN - 8 2005

HOFFMAN-LA ROCHE, INC.
PATENT DEPARTMENT
340 KINGSLAND STREET
NUTLEY, NJ 07110

In re Application of	:
Alexander Alanine et al	:
Serial No.: 10/322,272	: PETITION DECISION
Filed: December 18, 2002	:
Attorney Docket No.: 20661US2	:

This is in response to the petition under 37 CFR 1.144, filed March 21, 2005, requesting withdrawal of an improper restriction requirement.

BACKGROUND

A review of the file history shows that this application was filed under 35 U.S.C. 111 on December 18, 2002, and contained claims 1-14. In a first Office action, mailed May 5, 2003, the examiner set forth a restriction requirement. The examiner identified no groups, but stated that Claim 1 was directed to a plurality of patentably distinct species and required applicants to elect a single species for prosecution. The examiner also stated that based on the species elected the examiner would identify a generic concept to which the application would be restricted. Applicants, by telephone, identified the first named species in claim 9 as the desired/elected species. The examiner then created a generic concept based on R4 being limited to phenyl, R' as option (a) and X being oxygen, sulfur or two hydrogens, all other variables being as stated in claim 1. The examiner also made a rejection under 35 U.S.C. 112, second paragraph, of several claims.

Applicants replied on August 6, 2003, making some minor amendments to the claims to overcome the rejection under 35 U.S.C. 112 and traversing the restriction requirement which applicants identified as an election of species requirement only. Applicants argued that it is improper for the Office to determine applicants' invention relying on *In re Weber*. Applicants requested that the full scope of the claims be examined based on the guidance of M.P.E.P. 803.02.

The examiner mailed a new Office action to applicants on October 20, 2003, maintaining the restriction requirement and making it Final. The examiner argued that it was not improper to make a restriction within a claim and that failure to restrict the claims placed an unreasonable search burden on the examiner/Office. The examiner then objected to the claims as containing non-elected subject matter and required amendment thereof.

An interview was held with the examiner on October 30, 2003, following which an amendment after Final rejection was filed followed by an RCE request. The amendment limited the claims to substantially the generic concept drawn by the examiner by amending several claims, canceling others and adding claims 15-31, directed mostly to groups of individually named compounds. Applicants continued their argument of traversal of the restriction requirement as before.

Following the filing of the RCE papers a new examiner was assigned the application. The new examiner mailed a non-Final Office action to applicants on September 23, 2004, setting forth a new restriction requirement, as follows:

Group I, claims 1-3, 8-9, 12-13 and 15-31, in part, drawn to compounds of formula (IA) where the variables X, R^1, R^2, R^3 and R^4 are as defined in claim 1, the 5-7 membered aromatic or non-aromatic heterocycle R' represents pyridine, piperidine, morpholine or thiomorpholine;

Group II, claims 1-3, 8-9, 12-13 and 15-31, in part, drawn to compounds of formula (IA) where the variables X, R^1, R^2, R^3 and R^4 are as defined in claim 1, the 5-7 membered aromatic or non-aromatic heterocycle R' represents pyrrolidine, thiazolidine, thiophene or imidazole;

Group III - claims 1-3, 8-9, 12-13 and 15-31, in part, drawn to compounds of formula (IA) where the variables X, R^1, R^2, R^3 and R^4 are as defined in claim 1, the 5-7 membered aromatic or non-aromatic heterocycle R' represents diazepane; and

Group IV - claims 1-3, 8-9, 12-13 and 15-31, in part, drawn to compounds of formula (IA) not encompassed by Groups I-III.

An election of species was required within whichever group was elected.

The examiner argued that restriction was proper since the compounds within the Markush Group do not share a common utility or do not share a substantial structural feature essential to a utility.

Applicants replied on October 25, 2004, electing a group and a species and strenuously traversing the restriction requirement in view of the fact that the examiner appears not to have given full faith and credit to the work of the previous examiner who did not make a restriction requirement as now set forth. Applicants argued that the full scope of the claims should be allowed as they were essentially found allowable by the previous examiner.

The examiner, following a brief telephone interview on October 27, 2004, mailed a new non-Final Office action to applicants on December 17, 2004, maintaining the restriction requirement based on search burden and making it Final. An obvious double patenting rejection was also made over a copending later filed divisional application.

Applicants filed this petition on March 21, 2005, requesting withdrawal of an improper restriction requirement. Applicants also note in their petition that the copending application has been erroneously allowed in a different group.

DISCUSSION

Applicants specifically petition for the withdrawal of the restriction requirement made by the current examiner as being improper. Applicants note that they disagree with the restriction requirement made by the first examiner, but had acquiesced in it in order to advance prosecution to allowance.

A review of the first examiner's "restriction requirement" shows that it is only an election of species requirement as no groups were set forth. The examiner's "development of a generic concept" to which the claims would be limited upon election of a species is contrary to Office policy and case law. However, following an interview, applicants agreed to limit their claims to the generic concept developed by the examiner in order to obtain allowance of the application. To that end an amendment after Final rejection was filed, but which contained at least one claim not within the generic concept and was denied entry. RCE papers were then filed correcting the error and expecting allowance on first action since the examiner had cited no prior art against the claims. Concurrently a divisional application was filed to the non-elected subject matter deleted from the claims.

Due to resignation of the first examiner the application was reassigned. A new examiner then proposed a new restriction requirement further restricting the claims the previous examiner had deemed essentially allowable. The examiner argued lack of a common core or lack of a common utility based on the common core. A review of the compound claims shows that all are based on a common benzothiazole core having up to four R groups on the benzene ring, all of which are fairly common and a single R group attached to the carbon of the thiazole ring via a C-N linkage wherein the C may have a sulfur, oxygen or two hydrogens attached to it. The R group engendered the previous examiner's requirement for election of species. It now appears that the current examiner has based a restriction requirement on the same R group. This ignores the previous examiner's determination that a common core exists and that utility is directly related to the common core.

Since the scope of this R group has not been limited or further amended beyond what the previous examiner limited it to, further restriction is improper as it fails to give full faith and credit to a previous examiner's work. The restriction requirement is therefore withdrawn as improper.

The improper allowance of divisional application 10/930,361 in Art Unit 2865 is noted. This allowance will be withdrawn and the application returned for proper examination in Art Unit 1625.

DECISION

The petition is **GRANTED.** The restriction set forth in the Office action of September 23, 2004 is withdrawn. The Office action maintaining the requirement and making it Final, mailed December 17, 2004, is also withdrawn

The application will be forwarded to the examiner for preparation of a new Office action commensurate with the above decision.

Should there be any questions about this decision please contact William R. Dixon, Jr., by letter addressed to Director, TC 1600, at the address listed above, or by telephone at 571-272-0519 or by facsimile sent to the general Office facsimile number 571-273-8300.

Bruce M. Kisliuk
Director, Technology Center 1600

SPE RESPONSE FOR CERTIFICATE OF CORRECTION

Paper No.: _____

DATE : 3/14/07

TO SPE OF : ART UNIT 1624

SUBJECT : Request for Certificate of Correction on Patent No.: 7087636

A response is requested with respect to the accompanying request for a certificate of correction.

Please complete this form and return with file, within 7 days to:
Palm location **7580, Certificates of Correction Branch – South Tower – 9A22**
If response is for an IFW, **return to employee (named below) via PUBSCofC Team in MADRAS.**
With respect to the change(s) requested, correcting Office and/or Applicant's errors, should the patent read as shown in the certificate of correction (COCIN)? No new matter should be introduced, nor should the scope or meaning of the claims be changed.

Valerie Jackson

Thank You For Your Assistance

Certificates of Correction Branch
Tel. No. 703-308-9390 ext. 114

The request for issuing the above-identified correction(s) is hereby:
Note your decision on the appropriate box.

☒ **Approved**	All changes apply.
☐ **Approved in Part**	Specify below which changes **do not** apply.
☐ **Denied**	State the reasons for denial below.

Comments:

Joseph K. McKane

JOSEPH K. McKANE
SUPERVISORY PATENT EXAMINER
TECHNOLOGY CENTER 1600

SPE

1626

Art Unit

UNITED STATES PATENT AND TRADEMARK OFFICE

COMMISSIONER FOR PATENTS
UNITED STATES PATENT AND TRADEMARK OFFICE
P.O. BOX 1450
ALEXANDRIA, VA 22313-1450
www.uspto.gov

MAILED

MAY 12 2005

DIRECTOR'S OFFICE
TECHNOLOGY CENTER 2600

ERIC W. PETRASKI
68 Old Hawleyville Road
Bethel, CT 06801

In re application of:
Gary D. Novack, et al.
Application No. 10/322,277
Filed: December 17, 2002
For: Self-Correcting Autonomic Mouse

DECISION ON REQUEST TO WITHDRAW FROM RECORD

This is a decision on the request to withdraw as attorney/agent of record filed on December 16, 2004.

A grantable request to withdraw as attorney/agent of record must:
(1) indicate the present mailing address of the attorney(s)/agent(s) who seek(s) to withdraw, and
(2) be signed by each attorney/agent seeking to withdraw or clearly be signed on their behalf, and
(3) be *approved* at least thirty (30) days prior to the maximum extendable period for response to any outstanding Office Action, and
(4) indicate the address to which future correspondence should be mailed.

Attorney requesting withdrawal is not of record.

Accordingly, the request is **DENIED.**

All future communications from the Office will continue to be directed to the address listed above until otherwise notified by applicant. Applicant is reminded of the obligation to promptly notify the Patent and Trademark Office of any change in correspondence address to ensure receipt of all communications from the Office.

Kenneth Wieder
Special Program Examiner
Technology Center 2600
Communications
(571) 272-2986

UNITED STATES PATENT AND TRADEMARK OFFICE

Commissioner for Patents
United States Patent and Trademark Office
Washington, D.C. 20231
www.uspto.gov

Paper No. 4

Shantanu Basu
Morrison and Foerster LLP
755 Page Mill Road
Palo Alto, CA 94304-1018

COPY MAILED

SEP 0 3 2003

OFFICE OF PETITIONS

In re Application of :
David W. Morris, et al. :
Application No. 10/322,281 : DECISION GRANTING
Filed: December 17, 2002 : PETITION
Attorney Docket No. 529452001000 :

This is a decision on the petition filed July 31, 2003, requesting that the above-identified application be accorded a filing date of December 17, 2002, rather than the presently accorded date of December 18, 2002. The petition is properly treated as a petition under 37 CFR 1.10(c).

The petition is **GRANTED**.

Petitioner alleges that the application was deposited in Express Mail Service on December 17, 2002. In support, the petition is accompanied by a copy of Express Mail receipt No. EV093218820US, showing a "date-in" of December 17, 2002. The same Express Mail receipt number was referred to in the original application papers found in the file.

The Office considers the date the paper or fee shown as deposited as "Express Mail" to be the "date-in" on the Express Mail label. See MPEP 513. That is the date that verifies that the package was actually mailed. The evidence is convincing that the application was deposited as "Express Mail" with the U. S. Postal Service on December 17, 2002.

This application file is being forwarded to the Office of Initial Patent Examination Division for further **processing with a filing date of December 17, 2002.** Thereafter, the application file will be forwarded to Technology Center 1600 for examination in due course.

Telephone inquiries concerning this matter may be directed to Marianne Morgan at (703) 306-3475.

Sherry Brinkley
Petitions Examiner
Office of Petitions
Office of the Deputy Commissioner
For Patent Examination Policy

UNITED STATES PATENT AND TRADEMARK OFFICE

Commissioner for Patents
United States Patent and Trademark Office
P.O. Box 1450
Alexandria, VA 22313-1450
www.uspto.gov

Paper No. 5

Fenwick & West LLP
Silicon Valley Center
801 California Street
Mountain View, CA 94041

MAILED

JUL 0 2 2004

Technology Center 2100

In re Application of:
Mark KENNEDY, et al.
Application No. 10/322,289
Filed: December 17, 2002
For: BLOCKING REPLICATION OF E-MAIL WORMS

DECISION ON REQUEST TO WITHDRAW AS ATTORNEY OR AGENT

This is a decision on the Request to Withdraw from Representation filed June 3, 2004.

A grantable request to withdraw as attorney of record should indicate thereon the present mailing addresses of the attorney(s) who is/are withdrawing from the record and of the applicant. The request for withdrawal must be signed by every attorney seeking to withdraw or contain a clear indication that one attorney is signing on behalf of another/others. A request to withdraw will not be approved unless at least 30 (thirty) days would remain between the date of approval and the later of the expiration date of a time to file a response or the expiration date of the maximum time period which can be extended under 37 C.F.R. § 1.136(a). The effective date of withdrawal being the date of decision and not the date of request. See M.P.E.P. § 402.06. 37 C.F.R. § 1.36 further requires that the applicant or patent owner be notified of the withdrawal of the attorney or agent.

The request is **GRANTED.**

All future communications from the Office will be directed to the below-listed address until otherwise notified by applicant. This correspondence address is provided by the withdrawn attorney(s). Applicant is reminded of the obligation to promptly notify the Patent and Trademark Office (Office) of any change in correspondence address to ensure receipt of all communications from the Office.

Vincent N. Trans
Special Program Examiner
Technology Center 2100
Computer Architecture, Software, and
Information Security
703-305-9750

cc: Edward J. Radlo
Sonnenschein Nath & Rosenthal LLP
685 Market Street
6th Floor
San Francisco, CA 94105

SPE RESPONSE FOR CERTIFICATE OF CORRECTION

Paper No.: _____

DATE : 5-30-07

TO SPE OF : ART UNIT 1624

SUBJECT : Request for Certificate of Correction on Patent No.: 7001911 B2 (10/322306

A response is requested with respect to the accompanying request for a certificate of correction.

Please complete this form and return with file, within **7** days to:
Palm location **7580, Certificates of Correction Branch – South Tower – 9A22**
If response is for an IFW, **return to employee (named below) via PUBSCofC Team in MADRAS.**
With respect to the change(s) requested, correcting Office and/or Applicant's errors, should the patent read as shown in the certificate of correction (COCIN)? No new matter should be introduced, nor should the scope or meaning of the claims be changed.

Please reply ASAP Thanks

Eva James

Thank You For Your Assistance

Certificates of Correction Branch
Tel. No. 703-305-8309

The request for issuing the above-identified correction(s) is hereby:
Note your decision on the appropriate box.

- ☒ **Approved** — **All** changes apply.
- ☐ **Approved in Part** — Specify below which changes **do not** apply.
- ☐ **Denied** — State the reasons for denial below.

Comments:

JAMES O. WILSON
SUPERVISORY PATENT EXAMINER
TECHNOLOGY CENTER 1600

Art Unit 1624

SPE Art Unit

UNITED STATES PATENT AND TRADEMARK OFFICE

UNITED STATES DEPARTMENT OF COMMERCE
United States Patent and Trademark Office
Address: COMMISSIONER FOR PATENTS
P.O. Box 1450
Alexandria, Virginia 22313-1450
www.uspto.gov

TOWNSEND AND TOWNSEND AND CREW, LLP
TWO EMBARCADERO CENTER
EIGHTH FLOOR
SAN FRANCISCO, CA 94111-3834

Mail Date: 04/21/2010

Applicant	: Mark Tonack	: DECISION ON REQUEST FOR
Patent Number	: 7133804	: RECALCULATION of PATENT
Issue Date	: 11/07/2006	: TERM ADJUSTMENT IN VIEW
Appliction No	: 10/322,310	: OF WYETH
Filed	: 12/17/2002	:
		:

The Patentee's Request for Recalculation is **DISMISSED.**

This Request is deemed ineligible for consideration for one or more of the following reasons:

(A). The patent for which PTA recalculation is requested is either a design or reissue application or is a reexamination proceeding;

(B). The patent for which PTA recalculation is requested resulted from a utility or plant application filed under 35 USC 111(a) before May 29, 2000 and no CPA filed in the application on/after May 29, 2000;

(C). The patent for which PTA recalculation is requested resulted from an international application in which the international filing date was before May 29, 2000 and no CPA filed in the application on/after May 29, 2000;

(D). The patent for which PTA recalculation is requested issued on/after March 2, 2010;

(E). The Request for Recalculation was filed more than 180 days after the grant date of the patent and the request was not filed within two months of a dismissal of a request for reconsideration of the of the patent term under 37 CFR 1.705(d);

(F). The Request for Recalculation is not solely limited to USPTO pre-Wyeth interpretation of 35 U.S.C. 154(b)(2)(A);

or

(G). A civil action was filed pursuant to 35 U.S.C. 154(b)(4)(A)concerning the same patent at issue in this request.

Patentee may file a reply to this decision dismissing the Request for Recalculation. Patentee must file such reply within one month or thirty days, whichever is longer, of the mail date of the decision dismissing the Request for Recalculation. No fee is required if patentee is asserting in the reply that the dismissal for ineligibility is improper.

Patentee should use document code PET.OP if electronically filing a reply to this dismissal. If the USPTO finds that the request was improperly deemed ineligible, the USPTO will mail applicant a recalculation determination.

Patentee should be aware that in order to preserve the right to review in the United States District Court for the District of Columbia of the USPTO patent term adjustment determination, patentee must ensure that he or she also take the steps required under 35 U.S.C. 154(b)(4)(A). Nothing in the request for recalculation should be construed as providing an alternative time frame for commencing a civil action under 35 U.S.C. 154 (b)(4)(A).

Any questions concerning this decision should be directed to the Office of Patent Legal Administration at 571-272-7702.

UNITED STATES PATENT AND TRADEMARK OFFICE

COMMISSIONER FOR PATENTS
UNITED STATES PATENT AND TRADEMARK OFFICE
P.O. BOX 1450
ALEXANDRIA, VA 22313-1450
www.uspto.gov

PENNIE AND EDMONDS
1155 AVENUE OF THE AMERICAS
NEW YORK NY 10036-2711

In re Application of	:
Pramomd K. Srivastava et al	:
Serial No.: 10/322,312	: PETITION TO MAKE SPECIAL
Filed: December 16, 2002	:
Attorney Docket No.: 8449-284-999	:

This is in response to applicants' petition filed June 20, 2003, to make the above-identified application special under the provisions of 37 CFR 1.102(d). The delay in acting on this petition is regretted, but was occasioned by conversion to an Image File Wrapper.

Applicant has satisfied the provisions set forth in M.P.E.P. 708.02, X. Therefor the petition is **GRANTED**.

The application will be forwarded to the examiner for action on the merits commensurate with this decision.

Should there be any questions with regard to this letter please contact William R. Dixon, Jr. by letter addressed to the Director, Technology Center 1600, PO BOX 1450, ALEXANDRIA, VA 22313-1450, or by telephone at (703) 308-3824 or by facsimile transmission at (703) 305-7230

William R. Dixon, Jr.
Special Program Examiner
Technology Center 1600

UNITED STATES PATENT AND TRADEMARK OFFICE

Commissioner for Patents
United States Patent and Trademark Office
P.O. Box 1450
Alexandria, VA 22313-1450
www.uspto.gov

THORPE NORTH & WESTERN, L.L.P.
P.O. BOX 1219
SANDY, UTAH 84091-1219

COPY MAILED

AUG 1 1 2008

OFFICE OF PETITIONS

In re Application of
Chen et al.
Application No. 10/322,344
Filed: December 17, 2002
Attorney Docket No. 21388

: DECISION ON PETITION

This is a decision on the petition under 37 CFR 1.137(b), filed May 2, 2008, to revive the above-identified application.

The petition is **DISMISSED**.

Any request for reconsideration of this decision must be submitted within TWO (2) MONTHS from the mail date of this decision. Extensions of time under 37 CFR 1.136(a) are permitted. The reconsideration request should include a cover letter entitled "Renewed Petition under 37 CFR 1.137(b)." This is **not** a final agency action within the meaning of 5 U.S.C. § 704.

The application became abandoned for failure to reply in a timely manner to the non-final Office action mailed October 11, 2006, which set a shortened statutory period for reply of three (3) months. No extensions of time under the provisions of 37 CFR 1.136(a) were obtained. Accordingly, the application became abandoned on January 12, 2007. A Notice of Abandonment was mailed April 30, 2007.

A grantable petition under 37 CFR 1.137(b) must be accompanied by: (1) the required reply, unless previously filed; (2) the petition fee as set forth in 37 CFR 1.17(m); (3) a statement that the entire delay in filing the required reply from the due date for the reply until the filing of a grantable petition pursuant to 37 CFR 1.137(b) was unintentional; and (4) any terminal disclaimer (and fee as set forth in 37 CFR 1.20(d)) required by 37 CFR 1.137(c). Where there is a question as to whether either the abandonment or the delay in filing a petition under 37 CFR 1.137 was unintentional, the Commissioner may require additional information. *See* MPEP 711.03(c)(II)(C) and (D). The instant petition lacks none of the above items.

The petition must be signed by:

(1) An attorney or agent of record appointed in compliance with § 1.34(b);
(2) A registered attorney or agent not of record who acts in a representative capacity under the provisions of § 1.34(a);
(3) The assignee of record of the entire interest, if there is an assignee of record of the entire interest;
(4) An assignee of record of an undivided part interest, and any assignee(s) of the remaining interest and any applicant retaining an interest, if there is an assignee of record of an undividing part interest; or
(5) All of the applicants (§§ 1.42. 1.43 and 1.47) for patent, unless there is an assignee of record of the entire interest and such assignee has taken action in the application in accordance with §§ 3.71 and 3.73.

Further, only one of the four listed inventors has signed the instant petition. As discussed above, all of the inventors are required to sign the petition.

Further, the address given on the petition differs from the current address of record. A courtesy copy of this decision is being mailed to the address given on the petition; however, the Office will mail all future correspondence solely to the address of record.

Further correspondence with respect to this matter should be addressed as follows:

By mail:
Mail Stop PETITIONS
Commissioner for Patents
Post Office Box 1450
Alexandria, VA 22313-1450

By hand:
Customer Service Window
Mail Stop Petitions
Randolph Building
401 Dulany Street
Alexandria, VA 22314

By fax:
(571) 273-8300
ATTN: Office of Petitions

Any questions concerning this matter may be directed to Joan Olszewski at (571) 272-7751.

Liana Walsh
Petitions Examiner
Office of Petitions

cc: Mahesh V. Patel
675 Arapeen, Suite 202
Salt Lake city, UT 84108

UNITED STATES PATENT AND TRADEMARK OFFICE

Commissioner for Patents
United States Patent and Trademark Office
P.O. Box 1450
Alexandria, VA 22313-1450
www.uspto.gov

THORPE NORTH & WESTERN, L.L.P.
P.O. BOX 1219
SANDY, UTAH 84091-1219

COPY MAILED

OCT 20 2008

OFFICE OF PETITIONS

In re Application of	:	
Chen et al.	:	
Application No. 10/322,344	:	DECISION ON PETITION
Filed: December 17, 2002	:	
Attorney Docket No. 21388	:	

This is a decision on the renewed petition under 37 CFR 1.137(b), filed September 30, 2008, to revive the above-identified application.

The petition is **DISMISSED**.

Any request for reconsideration of this decision must be submitted within TWO (2) MONTHS from the mail date of this decision. Extensions of time under 37 CFR 1.136(a) are permitted. The reconsideration request should include a cover letter entitled "Renewed Petition under 37 CFR 1.137(b)." This is **not** a final agency action within the meaning of 5 U.S.C. § 704.

The application became abandoned for failure to reply in a timely manner to the non-final Office action mailed October 11, 2006, which set a shortened statutory period for reply of three (3) months. No extensions of time under the provisions of 37 CFR 1.136(a) were obtained. Accordingly, the application became abandoned on January 12, 2007. A Notice of Abandonment was mailed April 30, 2007.

A grantable petition under 37 CFR 1.137(b) must be accompanied by: (1) the required reply, unless previously filed; (2) the petition fee as set forth in 37 CFR 1.17(m); (3) a statement that the entire delay in filing the required reply from the due date for the reply until the filing of a grantable petition pursuant to 37 CFR 1.137(b) was unintentional; and (4) any terminal disclaimer (and fee as set forth in 37 CFR 1.20(d)) required by 37 CFR 1.137(c). Where there is a question as to whether either the abandonment or the delay in filing a petition under 37 CFR 1.137 was unintentional, the Commissioner may require additional information. *See* MPEP 711.03(c)(II)(C) and (D). The instant petition lacks none of the above items.

The petition must be signed by:

(1) An attorney or agent of record appointed in compliance with § 1.34(b);
(2) A registered attorney or agent not of record who acts in a representative capacity under the provisions of § 1.34(a);
(3) The assignee of record of the entire interest, if there is an assignee of record of the entire interest;
(4) An assignee of record of an undivided part interest, and any assignee(s) of the remaining interest and any applicant retaining an interest, if there is an assignee of record of an undividing part interest; or
(5) All of the applicants (§§ 1.42. 1.43 and 1.47) for patent, unless there is an assignee of record of the entire interest and such assignee has taken action in the application in accordance with §§ 3.71 and 3.73.

Petitioner states that the original petition was proper as Mr. Patel is both an inventor and the President and CEO of the assignee of the entire interest, Lipocine, Inc. The establishment of ownership by the assignee must be submitted prior to, or at the same time as, the paper requesting or taking action is submitted. 37 CFR 3.73(c). As Mr. Patel did not submit a Statement under 37 CFR 3.73(b) with the original petition, and further did not state that he was the President and CEO of the company, the petition was properly dismissed.

In the instant petition, petitioner has directed the Office to the updated assignment at its Reel/Frame number to meet the 37 CFR 3.73(b) requirement. However, the submission must be signed by a person in the organization having apparent authority to sign on behalf of the organization. 37 CFR 3.73(b)(2)(ii). An officer (chief executive officer, president, vice-president, secretary, or treasurer) is presumed to have authority to sign on behalf of the organization. The signature of the chairman of the board of directors is acceptable, but not the signature of an individual director. Modifications of these basic titles are acceptable, such as vice-president for sales, executive vice-president, assistant treasurer, vice-chairman of the board of directors. In foreign countries, a person who holds the title "Manager" or "Director" is normally an officer and is presumed to have the authority to sign on behalf of the organization. A person having a title (administrator, general counsel) that does not clearly set forth that person as an officer of the assignee is not presumed to have authority to sign the submission on behalf of the assignee. **A power of attorney (37 CFR 1.32(b)(4)) to a patent practitioner to prosecute a patent application executed by the applicant or the assignee of the entire interest does not make that practitioner an official of an assignee or empower the practitioner to sign the submission on behalf of the assignee.** A 37 CFR 3.73(b) statement is enclosed.

Further correspondence with respect to this matter should be addressed as follows:

By mail:
Mail Stop PETITIONS
Commissioner for Patents
Post Office Box 1450
Alexandria, VA 22313-1450

By hand:
Customer Service Window
Mail Stop Petitions
Randolph Building
401 Dulany Street
Alexandria, VA 22314

By fax:
(571) 273-8300
ATTN: Office of Petitions

Any questions concerning this matter may be directed to Joan Olszewski at (571) 272-7751.

/Liana Walsh/
Liana Walsh
Petitions Examiner
Office of Petitions

Enclosure: PTO/SB/96 – Statement under 3.73(b)

PTO/SB/96 (01-08)
Approved for use through 07/31/2008. OMB 0651-0031
U.S. Patent and Trademark Office; U.S. DEPARTMENT OF COMMERCE
Under the Paperwork Reduction Act of 1995, no persons are required to respond to a collection of information unless it displays a valid OMB control number.

STATEMENT UNDER 37 CFR 3.73(b)

Applicant/Patent Owner: _____

Application No./Patent No.: _____ Filed/Issue Date: _____

Entitled:

_____, a _____
(Name of Assignee) (Type of Assignee, e.g., corporation, partnership, university, government agency, etc.)

states that it is:

1. ☐ the assignee of the entire right, title, and interest; or

2. ☐ an assignee of less than the entire right, title and interest
(The extent (by percentage) of its ownership interest is _____%)

in the patent application/patent identified above by virtue of either:

A. ☐ An assignment from the inventor(s) of the patent application/patent identified above. The assignment was recorded in the United States Patent and Trademark Office at Reel _____, Frame _____, or for which a copy thereof is attached.

OR

B. ☐ A chain of title from the inventor(s), of the patent application/patent identified above, to the current assignee as follows:

1. From: _____ To: _____
The document was recorded in the United States Patent and Trademark Office at
Reel _____, Frame _____, or for which a copy thereof is attached.

2. From: _____ To: _____
The document was recorded in the United States Patent and Trademark Office at
Reel _____, Frame _____, or for which a copy thereof is attached.

3. From: _____ To: _____
The document was recorded in the United States Patent and Trademark Office at
Reel _____, Frame _____, or for which a copy thereof is attached.

☐ Additional documents in the chain of title are listed on a supplemental sheet.

☐ As required by 37 CFR 3.73(b)(1)(i), the documentary evidence of the chain of title from the original owner to the assignee was, or concurrently is being, submitted for recordation pursuant to 37 CFR 3.11.

[NOTE: A separate copy (*i.e.*, a true copy of the original assignment document(s)) must be submitted to Assignment Division in accordance with 37 CFR Part 3, to record the assignment in the records of the USPTO. See MPEP 302.08]

The undersigned (whose title is supplied below) is authorized to act on behalf of the assignee.

_____ _____
Signature Date

_____ _____
Printed or Typed Name Telephone Number

_____
Title

This collection of information is required by 37 CFR 3.73(b). The information is required to obtain or retain a benefit by the public which is to file (and by the USPTO to process) an application. Confidentiality is governed by 35 U.S.C. 122 and 37 CFR 1.11 and 1.14. This collection is estimated to take 12 minutes to complete, including gathering, preparing, and submitting the completed application form to the USPTO. Time will vary depending upon the individual case. Any comments on the amount of time you require to complete this form and/or suggestions for reducing this burden, should be sent to the Chief Information Officer, U.S. Patent and Trademark Office, U.S. Department of Commerce, P.O. Box 1450, Alexandria, VA 22313-1450. DO NOT SEND FEES OR COMPLETED FORMS TO THIS ADDRESS. SEND TO: **Commissioner for Patents, P.O. Box 1450, Alexandria, VA 22313-1450.**

If you need assistance in completing the form, call 1-800-PTO-9199 and select option 2.

Privacy Act Statement

The **Privacy Act of 1974 (P.L. 93-579)** requires that you be given certain information in connection with your submission of the attached form related to a patent application or patent. Accordingly, pursuant to the requirements of the Act, please be advised that: (1) the general authority for the collection of this information is 35 U.S.C. 2(b)(2); (2) furnishing of the information solicited is voluntary; and (3) the principal purpose for which the information is used by the U.S. Patent and Trademark Office is to process and/or examine your submission related to a patent application or patent. If you do not furnish the requested information, the U.S. Patent and Trademark Office may not be able to process and/or examine your submission, which may result in termination of proceedings or abandonment of the application or expiration of the patent.

The information provided by you in this form will be subject to the following routine uses:

1. The information on this form will be treated confidentially to the extent allowed under the Freedom of Information Act (5 U.S.C. 552) and the Privacy Act (5 U.S.C 552a). Records from this system of records may be disclosed to the Department of Justice to determine whether disclosure of these records is required by the Freedom of Information Act.
2. A record from this system of records may be disclosed, as a routine use, in the course of presenting evidence to a court, magistrate, or administrative tribunal, including disclosures to opposing counsel in the course of settlement negotiations.
3. A record in this system of records may be disclosed, as a routine use, to a Member of Congress submitting a request involving an individual, to whom the record pertains, when the individual has requested assistance from the Member with respect to the subject matter of the record.
4. A record in this system of records may be disclosed, as a routine use, to a contractor of the Agency having need for the information in order to perform a contract. Recipients of information shall be required to comply with the requirements of the Privacy Act of 1974, as amended, pursuant to 5 U.S.C. 552a(m).
5. A record related to an International Application filed under the Patent Cooperation Treaty in this system of records may be disclosed, as a routine use, to the International Bureau of the World Intellectual Property Organization, pursuant to the Patent Cooperation Treaty.
6. A record in this system of records may be disclosed, as a routine use, to another federal agency for purposes of National Security review (35 U.S.C. 181) and for review pursuant to the Atomic Energy Act (42 U.S.C. 218(c)).
7. A record from this system of records may be disclosed, as a routine use, to the Administrator, General Services, or his/her designee, during an inspection of records conducted by GSA as part of that agency's responsibility to recommend improvements in records management practices and programs, under authority of 44 U.S.C. 2904 and 2906. Such disclosure shall be made in accordance with the GSA regulations governing inspection of records for this purpose, and any other relevant (*i.e.*, GSA or Commerce) directive. Such disclosure shall not be used to make determinations about individuals.
8. A record from this system of records may be disclosed, as a routine use, to the public after either publication of the application pursuant to 35 U.S.C. 122(b) or issuance of a patent pursuant to 35 U.S.C. 151. Further, a record may be disclosed, subject to the limitations of 37 CFR 1.14, as a routine use, to the public if the record was filed in an application which became abandoned or in which the proceedings were terminated and which application is referenced by either a published application, an application open to public inspection or an issued patent.
9. A record from this system of records may be disclosed, as a routine use, to a Federal, State, or local law enforcement agency, if the USPTO becomes aware of a violation or potential violation of law or regulation.

UNITED STATES PATENT AND TRADEMARK OFFICE

Commissioner for Patents
United States Patent and Trademark Office
P.O. Box 1450
Alexandria, VA 22313-1450
www.uspto.gov

THORPE NORTH & WESTERN, LLP.
P.O. BOX 1219
SANDY UT 84091-1219

MAILED

NOV 19 2009

OFFICE OF PETITIONS

In re Application of	:	
Chen et al.	:	
Application No. 10/322,344	:	DECISION ON PETITION
Filed: December 17, 2002	:	
Attorney Docket No. 01235-21388	:	

This is a decision on the second renewed petition under the unintentional provisions of 37 CFR 1.137(b), filed December 19, 2008, to revive the above-identified application.

The petition is **GRANTED**.

The application became abandoned for failure to reply in a timely manner to the non-final Office action mailed October 11, 2006, which set a shortened statutory period for reply of three (3) months. No extensions of time under the provisions of 37 CFR 1.136(a) were obtained. Accordingly, the application became abandoned on January 12, 2007. A Notice of Abandonment was mailed April 30, 2007.

The petition satisfies the requirements of 37 CFR 1.137(b) in that petitioner has supplied (1) the reply in the form of an Amendment (previously filed May 2, 2008), (2) the petition fee of $770.00 (previously paid May 2, 2008), and (3) an adequate statement of unintentional delay.

Telephone inquiries concerning this decision should be directed to the undersigned at (571) 272-7751.

This matter is being referred to Technology Center AU 1618 for appropriate action by the Examiner in the normal course of business on the reply received.

Joan Olszewski
Petitions Examiner
Office of Petitions

UNITED STATES PATENT AND TRADEMARK OFFICE

Commissioner for Patents
United States Patent and Trademark Office
P.O. Box 1450
Alexandria, VA 22313-1450
www.uspto.gov

JUN 17 2005

Schwegman, Lundberg, Woessner
& Kluth, P.A.
P.O. Box 2938
Minneapolis, MN 55402-0938

In re application of : **DECISION ON PETITION**
Dayton T. Reardan, et al. : **TO MAKE SPECIAL**
Application No. 10/322,348 : **(ACCELERATED**
Filed: December 17, 2002 : **EXAMINATION)**
For: SENSITIVE DRUG DISTRIBUTION SYSTEM AND METHOD

This is in response to the renewed petition filed on October 4, 2004 to make the above-identified application special on the basis of special examining procedure for certain new applications - accelerated examination as set forth in MPEP § 708.02 VIII.

The requirements for granting special status under this section are: (A) a petition to make special accompanied by the fee set forth in 37 CFR 1.17(i); (B) all claims being directed to a single invention, or an election without traverse if the Office determines that all the claims are not directed to a single invention; (C) a statement that a pre-examination search was made listing the field of search; (D) one copy of each of the references deemed most closely related to the subject matter encompassed by the claims if said references are not already of record; and (E) a detailed discussion of how the claimed subject matter is patentable over the references in accordance with 37 CFR 1.111 (b) and (c).

Since all of the requirements for special status under MPEP § 708.02 VIII have been met, the petition is **GRANTED**.

The examiner is directed (1) to make an interference search for possible interfering applications, (2) to promptly examine this application out of turn, and (3) if any interfering application is discovered, to examine such application simultaneously and state in the first official letter of such application that it is being taken out of turn because of a possible interference.

Petitioner is advised that this application will continue to be special, throughout its entire prosecution and pendency, including interference or appeal, if any, only if petitioner makes a prompt ***bona fide*** effort, in response to each Office action, to place the application in condition for allowance, even if it is necessary to conduct an interview with the examiner to accomplish this purpose.

SUMMARY: Petition to Make Special **GRANTED.**

Randolph A. Reese
Special Programs Examiner
Technology Center 3600
571-272-6619

RAR/dcg: 6/1/05

UNITED STATES PATENT AND TRADEMARK OFFICE

UNITED STATES DEPARTMENT OF COMMERCE
United States Patent and Trademark Office
Address: COMMISSIONER FOR PATENTS
P.O. Box 1450
Alexandria, Virginia 22313-1450
www.uspto.gov

SCHWEGMAN, LUNDBERG & WOESSNER, P.A.
P.O. BOX 2938
MINNEAPOLIS, MN 55402

Mail Date: 04/20/2010

Applicant	: Dayton T. Reardan	: DECISION ON REQUEST FOR
Patent Number	: 7668730	: RECALCULATION of PATENT
Issue Date	: 02/23/2010	: TERM ADJUSTMENT IN VIEW
Appliction No	: 10/322,348	: OF WYETH AND NOTICE OF INTENT TO
Filed	: 12/17/2002	: ISSUE CERTIFICATE OF CORRECTION
		:

The Request for Recalculation is **GRANTED** to the extent indicated.

The patent term adjustment has been determined to be **547** days. The USPTO will *sua sponte* issue a certificate of correction reflecting the amount of PTA days determined by the recalculation.

Prior to the issuance of the certificate of correction, the USPTO will afford patentee an opportunity to be heard and request reconsideration. Accordingly, patentee has **one month or thirty (30) days**, whichever is longer, to file a request for reconsideration of this patent term adjustment calculation. See 35 U.S.C. 154(b)(3)(B)(ii) and 37 CFR 1.322(a)(4). No extensions of time will be granted under 37 CFR 1.136.

Patentee should use document code PET.OP if electronically filing a request for reconsideration of this patent term adjustment calculation. The patentee must also include the information required by 37 CFR 1.705(b)(2) and the fee required by 37 CFR 1.18(e). If patentee does not file a timely request for reconsideration of this patent term adjustment calculation including the information required by 37 CFR 1.705(b)(2) and the fee required by 37 CFR 1.18(e), the USPTO will issue a certificate of correction reflecting the PTA determination noted above.

Patentee should be aware that in order to preserve the right to review in the United States District Court for the District of Columbia of the USPTO patent term adjustment determination, patentee must ensure that he or she also take the steps required under 35 U.S.C. 154(b)(4)(A) in a timely manner. Nothing in the request for recalculation should be construed as providing an alternative time frame for commencing a civil action under 35 U.S.C. 154(b)(4)(A).

Any questions concerning this decision should be directed to the Office of Patent Legal Administration at 571-272-7702.

UNITED STATES PATENT AND TRADEMARK OFFICE

UNITED STATES DEPARTMENT OF COMMERCE
United States Patent and Trademark Office
Address: COMMISSIONER FOR PATENTS
P.O. Box 1450
Alexandria, Virginia 22313-1450
www.uspto.gov

GIFFORD, KRASS, SPRINKLE,ANDERSON & CITKOWSKI, P.C
PO BOX 7021
TROY, MI 48007-7021

Mail Date: 04/21/2010

Applicant	: Preben Boje Hansen	: DECISION ON REQUEST FOR
Patent Number	: 7651619	: RECALCULATION of PATENT
Issue Date	: 01/26/2010	: TERM ADJUSTMENT IN VIEW
Appliction No	: 10/322,353	: OF WYETH AND NOTICE OF INTENT TO
Filed	: 12/23/2002	: ISSUE CERTIFICATE OF CORRECTION
		:

The Request for Recalculation is **GRANTED** to the extent indicated.

The patent term adjustment has been determined to be **0** days. The USPTO will *sua sponte* issue a certificate of correction reflecting the amount of PTA days determined by the recalculation.

Prior to the issuance of the certificate of correction, the USPTO will afford patentee an opportunity to be heard and request reconsideration. Accordingly, patentee has **one month or thirty (30) days**, whichever is longer, to file a request for reconsideration of this patent term adjustment calculation. See 35 U.S.C. 154(b)(3)(B)(ii) and 37 CFR 1.322(a)(4). No extensions of time will be granted under 37 CFR 1.136.

Patentee should use document code PET.OP if electronically filing a request for reconsideration of this patent term adjustment calculation. The patentee must also include the information required by 37 CFR 1.705(b)(2) and the fee required by 37 CFR 1.18(e). If patentee does not file a timely request for reconsideration of this patent term adjustment calculation including the information required by 37 CFR 1.705(b)(2) and the fee required by 37 CFR 1.18(e), the USPTO will issue a certificate of correction reflecting the PTA determination noted above.

Patentee should be aware that in order to preserve the right to review in the United States District Court for the District of Columbia of the USPTO patent term adjustment determination, patentee must ensure that he or she also take the steps required under 35 U.S.C. 154(b)(4)(A) in a timely manner. Nothing in the request for recalculation should be construed as providing an alternative time frame for commencing a civil action under 35 U.S.C. 154(b)(4)(A).

Any questions concerning this decision should be directed to the Office of Patent Legal Administration at 571-272-7702.

UNITED STATES PATENT AND TRADEMARK OFFICE

Commissioner for Patents
United States Patent and Trademark Office
P.O. Box 1450
Alexandria, VA 22313-1450
www.uspto.gov

KLAUBER & JACKSON
411 HACKENSACK AVENUE
HACKENSACK, NJ 07601

COPY MAILED

JAN 12 2007

OFFICE OF PETITIONS

In re Application of :
Nathaniel Heintz et al :
Application No. 10/322,359 : DECISION ON PETITION
Filed: December 18, 2002 : UNDER 37 CFR 1.137(b)
Attorney Docket No. 600-1-232CON :

This is a decision on the petition under 37 CFR 1.137(b), filed September 6, 2006, to revive the above-identified application.

The petition is **DISMISSED**.

Any request for reconsideration of this decision must be submitted within TWO (2) MONTHS from the mail date of this decision. Extensions of time under 37 CFR 1.136(a) are permitted. The reconsideration request should include a cover letter entitled "Renewed Petition under 37 CFR 1.137(b)." This is **not** a final agency action within the meaning of 5 U.S.C. § 704.

A grantable petition under 37 CFR 1.137(b) must be accompanied by: (1) **the required reply**, unless previously filed; (2) the petition fee as set forth in 37 CFR 1.17(m); (3) **a statement that the entire delay in filing the required reply from the due date for the reply until the filing of a grantable petition pursuant to 37 CFR 1.137(b) was unintentional**; and (4) where appropriate, a terminal disclaimer (and fee as set forth in 37 CFR 1.20(d)) required by 37 CFR 1.137(d). **Where there is a question as to whether either the abandonment or the delay in filing a petition under 37 CFR 1.137 was unintentional, the Director may require additional information.** See MPEP 711.03(c).

The instant petition lacks items (1) and (3) above.

As to item (1), the Biotechnology Systems Branch of the Scientific and Technical Information Center (STIC) was unable to read the sequence listing on the disk submitted on September 6, 2006. *Note* attachment. Accordingly, before revival of this application can be effected, applicant must provide a substitute computer readable

form (CRF) copy of the sequence listing and must further comply with the provisions of §§ 37 CFR 1.821-1.825.

As to item (3) above, where there is a question as to whether either the abandonment or the delay in filing a petition under 37 CFR 1.137 was unintentional, the Director may require additional information. In view of the statements made in the petition, a question is raised as to whether the entire delay as set out in 37 CFR 1.137(b)(3) was in fact unintentional. More specifically, the following statement contained in the petition raises a question: "A Notice of Abandonment was mailed February 3, 2004, but was inadvertently not reported to Applicant, their intentions and instructions being unintentionally misunderstood and misconstrued." A further explanation of this statement is required. More specifically, why and how were the intentions and instructions from applicant misunderstood and did this misunderstanding actually result in the intentional abandonment of this application? Petitioner should submit copies of all available correspondence regarding the instructions given with regard to this application.

Further correspondence with respect to this matter should be addressed as follows:

By mail: Mail Stop PETITION
Commissioner for Patents
Post Office Box 1450
Alexandria, VA 22313-1450

By hand: Customer Service Window
Mail Stop Petitions
Randolph Building
401 Dulany Street
Alexandria, VA 22314

By fax: (571) 273-8300
ATTN: Office of Petitions

Any questions concerning this matter may be directed to the undersigned at (571) 272-3 218.

Frances Hicks
Petitions Examiner
Office of Petitions

ATTACHMENT: CFR Problem Report for Sequence Listing filed 9/6/06

UNITED STATES PATENT AND TRADEMARK OFFICE

Commissioner for Patents
United States Patent and Trademark Office
P.O. Box 1450
Alexandria, VA 22313-1450
www.uspto.gov

KLAUBER & JACKSON
411 HACKENSACK AVENUE
HACKENSACK, NJ 07601

COPY MAILED

MAR 29 2007

OFFICE OF PETITIONS

In re Application of :
Nathaniel Heintz et al :
Application No. 10/322,359 : DECISION ON PETITION
Filed: December 18, 2002 : UNDER 37 CFR 1.137(b)
Attorney Docket No. 600-1-232CON :

This is a decision on the renewed petition under 37 CFR 1.137(b), filed March 12, 2007, to revive the above-identified application.

The petition is **GRANTED**.

The above-identified application became abandoned for failure to reply in a timely manner to the Notice to File Missing Parts of Application (Notice) mailed February 26, 2003. The Notice set a period for reply of two (2) months from the mail date of the Notice. No extensions of time under the provisions of 37 CFR 1.136(a) were obtained. Accordingly, the above-identified application became abandoned on April 27, 2003.

The petition satisfies the conditions for revival pursuant to the provisions of 37 CFR 1.137(b). Accordingly, the reply to the Notice of February 26, 2003 is accepted as having been unintentionally delayed.

The renewed petition was accompanied a $750 petition fee. However, this fee is unnecessary as this fee was previously paid on September 6, 2006. Accordingly, as authorized, the $750 fee overpayment will be credited to petitioner's deposit account in due course.

Telephone inquiries concerning this decision should be directed to the undersigned at (571) 272-3218.

This matter is being referred to the Office of Initial Patent Examination for further pre-examination processing.

Frances Hicks
Petitions Examiner
Office of Petitions

UNITED STATES PATENT AND TRADEMARK OFFICE

COMMISSIONER FOR PATENTS
UNITED STATES PATENT AND TRADEMARK OFFICE
P.O. BOX 1450
ALEXANDRIA, VA 22313-1450
www.uspto.gov
DIW 05-03

Paper No. 5

LOUIS SICKLES II
AKIN GUMP STRAUSS HAUER & FELD LLP
ONE COMMERCE SQUARE
2005 MARKET STREET, SUITE 2200
PHILADELPHIA PA 19103-7013

COPY MAILED

MAY 15 2003

OFFICE OF PETITIONS

In re Application of :
Bifano and Dziekan :
Application No. 10/322,364 : DECISION ACCORDING STATUS
Filed: 18 December, 2002 : UNDER 37 CFR 1.47(a)
Attorney Docket No. 10622-12US :

This is in response to the petition under 37 CFR 1.47(a)[1] filed on 9 April, 2003.

The petition is **GRANTED**.

Petitioner has shown that the non-signing inventor has refused to join in the filing of the above-identified application after having acknowledged receipt of a copy of the application papers. Specifically, the declaration of facts of petitioners' registered patent attorney, Louis Sickles II, establishes that during a telephone conversation on 12 December, 2002, the non-signing inventor acknowledged receipt of a copy of the application, but stated he would only sign the declaration upon receipt of additional compensation. Additionally, the non-signing inventor has failed to return an executed declaration naming him as a joint inventor along with Louis D. Bifano.

The above-identified application and papers have been reviewed

---

[1] A grantable petition under 37 CFR 1.47(a) requires:
(1) proof that the non-signing inventor cannot be reached or refuses to sign the oath or declaration after having been presented with the application papers (specification, claims and drawings);
(2) an acceptable oath or declaration in compliance with 35 U.S.C. §§ 115 and 116;
(3) the petition fee; and
(4) a statement of the last known address of the non-signing inventor.

and found in compliance with 37 CFR 1.47(a). This application is hereby accorded Rule 1.47(a) status.

The petition fee of $130.00 will be charged to counsel's deposit account, No. 50-1017, as authorized on the Missing Parts transmittal sheet.

It is noted that the declaration lists the non-signing inventor's last known address as "102 Tintail Court" while the petition states the address is "102 Pintail Court". The Office assumes that the address as listed in the declaration contains a typographical error, and that the correct address is "102 Pintail Court". Petitioners **must** notify the Office if this is not a correct interpretation.

As provided in Rule 1.47(c), this Office will forward notice of this application's filing to the non-signing inventor at the address given in the petition, not the Declaration. Notice of the filing of this application will also be published in the Official Gazette.

After this decision is mailed, the application will be forwarded to the Office of Initial Patent Examination for further processing.

Telephone inquiries related to this decision should be directed to the undersigned at 703-308-6918.

DWood

Douglas I. Wood
Senior Petitions Attorney
Office of Petitions

UNITED STATES PATENT AND TRADEMARK OFFICE

COMMISSIONER FOR PATENTS
UNITED STATES PATENT AND TRADEMARK OFFICE
P.O. BOX 1450
ALEXANDRIA, VA 22313-1450
www.uspto.gov
DIW 05-03

COPY MAILED

MAY 15 2003

OFFICE OF PETITIONS

Rick Dziekan
102 Pintail Court
North Wales, PA 19454

In re Application of
Bifano et al.
Application No. 10/322,364
Filed: 18 December, 2002
For: TELECOMMUNICATIONS NETWORK EMPLOYING A WIRELESS BACKUP PATH

Dear Mr. Dziekan:

You are named as a joint inventor in the above identified United States patent application, filed under the provisions of 35 U.S.C. 116 (United States Code), and 37 CFR 1.47(a), Rules of Practice in Patent Cases. Should a patent be granted on the application you will be designated therein as a joint inventor.

As a named inventor you are entitled to inspect any paper in the file wrapper of the application, order copies of all or any part thereof (at a prepaid cost per 37 CFR 1.19) or make your position of record in the application. Alternatively, you may arrange to do any of the preceding through a registered patent attorney or agent presenting written authorization from you. If you care to join the application, counsel of record (see below) would presumably assist you. Joining in the application would entail the filing of an appropriate oath or declaration by you pursuant to 37 CFR 1.63.

Telephone inquiries regarding this communication should be directed to the undersigned at 703/308-6918. Requests for information regarding your application should be directed to the File Information Unit at 703/308-2733. Information regarding how to pay for and order a copy of the application, or a specific paper in the application, should be directed to Certification Division at 703/308-9726 or 1-800-972-6382 (outside the Washington D.C. area).

Douglas I. Wood
Senior Petitions Attorney
Office of Petitions

LOUIS SICKLES II
AKIN GUMP STRAUSS HAUER & FELD LLP
ONE COMMERCE SQUARE
2005 MARKET STREET, SUITE 2200
PHILADELPHIA PA 19103-7013

UNITED STATES PATENT AND TRADEMARK OFFICE

Commissioner for Patents
United States Patent and Trademark Office
P.O. Box 1450
Alexandria, VA 22313-1450
www.uspto.gov

NOV 15 2005

NIXON & VANDERHYE PC
1100 North Glebe Road, 8th Floor
Arlington, VA 22201-4714

In re Application of:
BREZNAK *et al.*
Serial No.: 10/322,426
Filed: December 19, 2002
Attorney Docket No.: **839-1289**

DECISION ON PETITION
TO WITHDRAW HOLDING
OF ABANDONMENT

This is a decision on the petition filed May 03, 2005, to withdraw the holding of abandonment in the above-identified application under 37 C.F.R. § 1.181. No fee is required.

The petition is **GRANTED.**

The application was held abandoned for failure to timely pay the issue fee in response to the Notice of Allowance and Issue Fee Due (Notice of Allowance) mailed on July 28, 2004. A Notice of Abandonment was mailed on December 02, 2004.

A review of the written record indicates that the correspondence address associated with the application file was changed on May 27, 2004, through an apparent error, internal to the USPTO. The result of this change was that the Notice of Allowance mailed July 28, 2004, was sent to an incorrect correspondence address. Accordingly, it cannot be presumed that the final Office action reached practitioner at the correspondence address of record. Therefore, the application was not abandoned in fact.

For the above stated reason, the petition is granted. The Notice of Abandonment is hereby vacated and the holding of abandonment withdrawn. The application is restored to pending status.

The application file is being forwarded to the Technology Center 2800 support staff for re-mailing the Notice of Allowability and a Notice of Allowance and Issue Fee Due. The shortened statutory periods for response set therein will be reset to run from the date the Notices are re-

mailed. Extensions of time for these periods are not available. See 37 C.F.R. § 1.136(c), effective November 07, 2000.

Inquiries regarding this decision should be directed to Clayton E. LaBalle at (571) 272-1594.

Richard K. Seidel, Director
Technology Center 2800
Semiconductors, Electrical and Optical
Systems and Components

UNITED STATES PATENT AND TRADEMARK OFFICE

Commissioner for Patents
United States Patent and Trademark Office
P.O. Box 1450
Alexandria, VA 22313-1450
www.uspto.gov

Paper No. 6

SILVERBROOK RESEARCH PTY LTD
393 DARLING STREET
BALMAIN, 2041
AUSTRALIA **AIRMAIL**

COPY MAILED

SEP 23 2004

OFFICE OF PETITIONS

In re Application of :
Kia Silverbrook et al :
Application No. 10/322,445 : ON PETITION
Filed: December 19, 2002 :
Attorney Docket No. ZF131US :

This is a decision on the petition under 37 CFR 1.137(b), filed July 26, 2004, to revive the above-identified application.

The petition is **GRANTED**.

The above-identified application became abandoned for failure to reply in a timely manner to the Notice to File Corrected Application Papers (Notice) mailed March 24, 2003. The Notice set a period for reply of two (2) months from the mail date of the Notice. No extensions of time under the provisions of 37 CFR 1.136(a) were obtained. Accordingly, the above-identified application became abandoned on May 25, 2003.

Telephone inquiries concerning this decision should be directed to Wan Laymon at (703) 306-5685.

The application file is being forwarded to the Office of Initial Patent Examiantion.

Wan Laymon
Petitions Examiner
Office of Petitions
Office of the Deputy Commissioner
for Patent Examination Policy

UNITED STATES PATENT AND TRADEMARK OFFICE

COMMISSIONER FOR PATENT
UNITED STATES PATENT AND TRADEMARK OFFIC
P.O. BOX 145
ALEXANDRIA, VA 22313-145
www.uspto.go

AUG - 9 2004

MAILED

AUG 9 2004

OFFICE OF THE DIRECTOR
TC 3600

August 3, 2004

Joseph A. Scafetta, Jr.
OBLON, SPIVAK, McCLELLAND,
MAIER & NEUSTADT, P.C.
1940 Duke Street
Alexandria, VA 22314

In re Application of:
Chuichi ISHIBASHI, et al.
Application No. 10/322,461
Filed: December 19, 2002
Attorney Docket No. 231774US3X

DECISION ON PETITION
UNDER 37 CFR 1.181

This is in response to the petition filed on June 1, 2004 under 37 CFR 1.181(a)(2) requesting the Commissioner to invoke his supervisory authority to require the Examiner to consider the prior art cited in the Information Disclosure Statement filed on December 19, 2002.

A review of the record reveals that Applicant filed an Information Disclosure Statement on December 19, 2002. The examiner initially never acknowledged or made of record the Information Disclosure Statement.

However since the filing of the petition, the examiner corrected the oversight and considered the Information Disclosure Statement on June 18, 2004.

Therefore, Applicant's requested relief has been given.

The petition is thus DISMISSED as being moot.

Telephone inquiries should be directed to D. Glenn Dayoan, Supervisory Patent Examiner, at (703) 308-3102.

Robert Oberleitner, Director
Patent Technology Center 3600
(703) 308-1134

sm/dgd: 8/4/04
SM

UNITED STATES PATENT AND TRADEMARK OFFICE

Commissioner for Patents
United States Patent and Trademark Office
P.O. Box 1450
Alexandria, VA 22313-1450
www.uspto.gov

SIEMENS CORPORATION
INTELLECTUAL PROPERTY DEPARTMENT
170 WOOD AVENUE SOUTH
ISELIN, NJ 08830

MAILED

SEP 23 2009

OFFICE OF PETITIONS

In re Application of
Robert L. Myers, et al.
Application No. 10/322,463
Filed: December 19, 2002
Attorney Docket No. 2005P12692US

ON PETITION

This is a decision on the petition under 37 CFR 1.137(b), filed July 13, 2009, to revive the above-identified application.

The petition is **GRANTED**.

The application became abandoned for failure to timely reply within the meaning of 37 CFR 1.113 to the final Office action, mailed December 11, 2008, which set a shortened statutory period for reply of three (3) months. No extension of time under the provisions of 37 CFR 1.136(a) was obtained. Accordingly, the application became abandoned on March 12, 2009. This decision precedes the mailing of a Notice of Abandonment. On July 13, 2009, the present petition was filed.

The petition is not signed by a registered patent attorney or patent agent of record. However, in accordance with 37 CFR 1.34, the signature of Carmen S. Ng appearing on the correspondence shall constitute a representation to the United States Patent and Trademark Office that she is authorized to represent the particular party on whose behalf he acts. If Ms. Ng desires to receive correspondence regarding this file, the appropriate power of attorney documents must be submitted. A courtesy copy of this decision is being mailed to Ms. Ng, the petitioner herein; however, all future correspondence regarding this application will be directed solely to the above-noted correspondence address of record.

The petition satisfies the requirements of 37 CFR 1.137(b) in that petitioner has supplied (1) the reply in the form of a Request for Continued Examination (RCE), including the fee of $810; (2) the petition fee of $1,620; and (3) an adequate statement of unintentional delay[1].

[1] 37 CFR 1.137(b)(3) requires a statement that the entire delay in filing the required reply from the due date for the reply until the filing of a grantable petition pursuant to 37 CFR 1.137(b) was unintentional. While the statement is not made by an attorney of record, such statement is being treated as having been made as the result of a reasonable inquiry into the facts and circumstances of such delay. See 37 CFR 10.18(b) and Changes to Patent Practice and Procedure; Final Rule Notice, 62 Fed. Reg. 53131, 53178 (October 10, 1997), 1203 Off. Gaz. Pat. Office 63, 103 (October 21, 1997). In the event that such an inquiry has not been made, petitioner must make such an inquiry. If such inquiry results in the discovery that it is not correct that the entire delay in filing the required reply from the due date for the reply until the filing of a grantable petition pursuant to 37 CFR 1.137(b) was unintentional, petitioner must notify the Office.

in accordance with MPEP 601.03. A courtesy copy of this decision is being mailed to the address given on the petition; however, the Office will mail all future correspondence solely to the address of record.

This application is being referred to Technology Center AU 2454 for processing of the RCE in accordance with 37 CFR 1.114and for appropriate action by the Examiner in the normal course of business.

Telephone inquiries concerning this decision should be directed to the undersigned at (571) 272-3204. Inquiries relating to further prosecution should be directed to the Technology Center.

Sherry D. Brinkley
Petitions Examiner
Office of Petitions

cc: CARMEN NG
716 GATEVIEW AVE
ALBANY, CA 94706

UNITED STATES PATENT AND TRADEMARK OFFICE

Commissioner for Patents
United States Patent and Trademark Office
P.O. Box 1450
Alexandria, VA 22313-1450
www.uspto.gov

YOUNG & THOMPSON
745 SOUTH 23RD STREET
2ND FLOOR
ARLINGTON, VA 22202

COPY MAILED

MAY 10 2005

OFFICE OF PETITIONS

In re Application of :
Shinya Takita :
Application No. 10/322,468 : ON PETITION
Filed: December 19, 2002 :
Attorney Docket No. 8001-1130 :

This is a decision on the petition under 37 CFR 1.173(b), filed April 13, 2005, to revive the above-identified application.

The petition is **GRANTED.**

The above-identified application became abandoned for failure to reply within the meaning of 37 CFR 1.113 in a timely manner to the final Office action mailed September 16, 2004, which set a shortened statutory period for reply of three (3) months. No extensions of time under the provisions of 37 CFR 1.136(a) were obtained. Accordingly, the above-identified application became abandoned on December 17, 2004.

The petition satisfies the conditions for revival pursuant to the provisions of 37 CFR 1.137(b) in that (1) the reply in the form of an amendment; (2) the petition fee; and (3) the required statement of unintentional delay have been received. Accordingly, the amendment to the final Office of September 16, 2004 is accepted as having been unintentionally delayed.

Telephone inquiries concerning this decision should be directed to Wan Laymon at (571) 272-3220.

This matter is being referred to Technology Center AU 1734.

Wan Laymon
Petitions Examiner
Office of Petitions
Office of the Deputy Commissioner
for Patent Examination Policy

UNITED STATES PATENT AND TRADEMARK OFFICE

6-14-07

Commissioner for Patents
United States Patent and Trademark Office
P.O. Box 1450
Alexandria, VA 22313-1450
www.uspto.gov

Patent No. : 7,097,674 B2
Ser. No. : 10/322,473
Inventor(s) : Bruno Delfort, et. al.
Issued : August 29, 2006
Title : DIESEL FUEL COMPOSITIONS THAT CONTAIN GLYCEROL ACETAL CARBONATES

Re: Request for Certificate of Correction

Consideration has been given your request for the issuance of a certificate of correction for the above-identified patent under the provisions of Rule(s) 1.322 or 1.323.

Assignees' names and addresses (assignment data) printed in a patent, are based *solely* on information supplied in the appropriate space for identifying the assignment data, i.e., item 3 of the Issue Fee Transmittal Form PTOL-85B. Granting of a request under 37 CFR 3.81(b) is required to correct applicant's error providing ***incorrect or erroneous*** assignment data, *before* issuance of a Certificate of Correction, under 37 CFR 1.323 *(see Manual of Patent Examining Procedures (M.P.E.P) Chp.1400, sect. 1481).* This procedure is required *at any time after the issue fee is paid*, including after issuance of the patent.

In view of the foregoing, your request in this matter is hereby denied.

A request to correct the Assignee under 37 CFR 3.81(b) should include:

A. **the processing fee set forth in 37 CFR 1.117(h) (currently $130);**
B. a statement that the failure to include the correct assignee name on the PTOL-85B was inadvertent; and
C. a copy of the Notice of Recordation of Assignment Document, reflecting the reel and frame number where the assignment(s) is recorded and/or reflecting proof of *the date* the assignment was submitted for recordation.

In the Request, Applicant(s) may request that the file be forwarded to Certificates of Correction Branch, for issuance of a Certificate of Correction, if the Request is granted.

Any request under 37 CFR 3.81(b) should be directed to the following address or facsimile number:

By mail: Mail Stop PETITIONS
Commissioner for Patents
Post Office Box 1450
Alexandria, VA 22313-1450

III. Accordingly, patentees and their assignee respectfully request that the Patent and Trademark Office issue a Certificate of Correction pursuant to 37 C.F.R. § 1.322 or § 1.323, respectively.

Respectfully submitted,

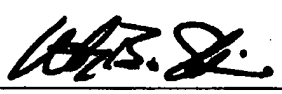

Harry B. Shubin, Reg. No. 32,004
Attorney for Applicants

MILLEN, WHITE, ZELANO
& BRANIGAN, P.C.
Arlington Courthouse Plaza 1
2200 Clarendon Blvd. Suite 1400
Arlington, Virginia 22201
Telephone: (703) 243-6333
Facsimile: (703) 243-6410

Attorney Docket No.: PET-2043

Date: June 1, 2007

HBS/rlt

JUN - 6 2007

UNITED STATES PATENT AND TRADEMARK OFFICE

OFFICE

COPY MAILED

JUL 25 2006

Director's Office
Office of Patent Publication

EITAN LAW GROUP
C/O LANDON IP, INC.
1700 DIAGONAL ROAD
SUITE 450
ALEXANDRIA, 22314

In re Application of :
SHOR, JOSEPH S., et al. :
Application No. 10/322,491 : **DECISION ON PETITION**
Filed: December 19, 2002 :
Attorney Docket No. P-5260-US :

This is a decision on the Petition To Withdraw Notice Of Abandonment, received in the United States Patent & Trademark (USPTO) on April 7, 2006.

The petition is **DISMISSED**. Any request for reconsideration of this decision, or as explained below, filing a petition seeking revival under 37 CFR § 1.137, must be filed within TWO (2) MONTHS from the mail date of this decision.

The above-identified application was held abandoned for applicant's failure to timely pay the issue fee, as required in the Notice of Allowance and Fee(s) Due mailed January 14, 2005. The Notice of Abandonment mailed on February 17, 2006 indicates, "The issue fee and publication, if applicable, was received on 06/28/05 (with a Certificate of Mailing or Transmission), which is after the expiration of the statutory period for payment of the issue fee (and publication fee) set in the Notice of Allowance (PTOL-85)."

Petitioner states that the applicants submitted the issue and publication fees on April 13, 2005. Also on the same day it came to their attention that there were insufficient fees on their Deposit Account and that on April 14, 2005, this was rectified and the necessary funds were deposited.

Review of the application file reveals that Part B - Fee(s) Transmittal received on June 28, 2005 was a resubmitted copy of the Fee(s) Transmittal the Office received on **April 13, 2005**, which authorized that the Issue Fee and Publication Fee be charged to Deposit Account No. 50-3400. Unfortunately, on **April 13, 2005**, when an attempt was made by the Office of Finance to charge the fees, there were insufficient funds in the Deposit Account.

37 CFR 1.25 (a) and (b), which states in part:

> 1.25(a) ...An amount sufficient to cover all fee, services, copies, etc., requested must always be on deposit. Charges to accounts with insufficient funds will not be accepted."
>
> 1.25 (b) ...An authorization to charge a fee to a deposit account will not be considered payment of the fee on the date the authorization to charge the fee is effective as to the particular fee to be charged unless sufficient funds are present in the account to cover the fee.

In light of the non-compliance with 37 CFR 1.25, the holding of abandonment cannot be withdrawn.

Applicant may seek relief by filing a petition for Revival of Abandoned Application under CFR § 1.137 (a) or (b). (Forms are available at USPTO website http://www.uspto.gov)

- Under 37 CFR 1.137(a), a petition for the revival of an ***unavoidable*** abandoned application
- Under 37 CFR 1.137(b), a petition for the revival of an ***unintentionally*** abandoned application

Further inquires with respect to filing a petition under 37 CFR § 1.137 may be directed to the Office of Petitions at 571-272-3282 or addressed as follows:

By mail:
Mail Stop Petitions
Commissioner for Patents
Office of Petitions
P O Box 1450
Alexandria, VA 22313-1450

Telephone inquires concerning this decision matter may be directed to the undersigned at 703 308-9250 Ext. 137.

Thomas E. Hawkins
Paralegal Specialist
Office of the Director
Office of Patent Publications

UNITED STATES PATENT AND TRADEMARK OFFICE

Commissioner for Patents
United States Patent and Trademark Office
P.O. Box 1450
Alexandria, VA 22313-1450
www.uspto.gov

Eitan Law Group
c/o Landon IP, Inc.
1700 Diagonal Road
Suite 450
Alexandria, VA 22314

COPY MAILED

OCT 25 2006

OFFICE OF PETITIONS

In re Application of :
Joseph S. Shor, et. al. :
Application No. 10/322,491 : ON PETITION
Filed: December 19, 2002 :
Attorney Docket No. P-5260-US :

This is a decision on the petition under 37 CFR 1.137(b), filed on September 13, 2006, to revive the above-identified application.

The application became abandoned for failure to timely respond to the Notice of Allowance and Fee(s) Due mailed January 14, 2005. A Notice of Abandonment was mailed on February 17, 2006.

The petition satisfies the requirements of 37 CFR 1.137(b) in that petitioner has supplied (1) the reply in the form of $1,400 for payment of the issue fee and $300 for the publication fee; (2) the petition fee of $1,500; and (3) an adequate statement of unintentional delay. Therefore, the petition is **GRANTED**.

The Office acknowledges receipt of one (1) sheet of replacement drawing containing Figure 4 filed on April 13, 2005. The Office also acknowledges receipt of $21 for seven (7) advance order soft copies paid on June 28, 2005.

This application file is being referred to the Office of Publications for review of the replacement drawing filed on April 13, 2005.

Telephone inquiries concerning this decision should be directed to the undersigned at (571) 272-3226.

Andrea Smith
Petitions Examiner
Office of Petitions

UNITED STATES PATENT AND TRADEMARK OFFICE

Commissioner for Patents
United States Patent and Trademark Office
P.O. Box 1450
Alexandria, VA 22313-1450
www.uspto.gov

SUGHRUE MION, PLLC
2100 PENNSYLVANIA AVENUE, N.W.
SUITE 800
WASHINGTON, DC 20037

COPY MAILED
OCT 25 2006
OFFICE OF PETITIONS

In re Application of Dewitt :
Application No. 10/322,511 : Decision on Petition
Filing Date: December 19, 2002 :
Attorney Docket No. A8386 :

This is a decision on the petition under 37 CFR 1.137(a), filed July 7, 2006, to revive the above-identified application. The petition is also being treated under 37 CFR 1.181 (no fee) as a petition to withdraw the holding of abandonment.

The petition under 37 CFR 1.181 is **granted**.

The petition under 37 CFR 1.137(a) is **dismissed as moot**.

A non-final Office action was mailed March 17, 2005. The correspondence listed the correct address for petitioner.

The United States Postal Service returned the Office action undelivered. The phrase "Return to Sender" is stamped on the front of the envelope. The reason the USPS stamped the envelope "Return to Sender" is unknown.

Since petitioner did not receive the Office action, the Notice of Abandonment mailed June 5, 2005, is hereby vacated and the holding of abandonment withdrawn.

Since the petition has been granted under 37 CFR 1.181, petitioner's request to have the petition considered under 37 CFR 1.137(a) is dismissed as moot. No petition fee is required for a petition to withdraw holding of abandonment under 37 CFR 1.181. Therefore, the Office will credit the $500 petition fee back to petitioner's deposit account.

Technology Center Art Unit 2883 will be informed of the instant decision. Thereafter, the Technology Center's technical support staff will mail a new copy of the March 17, 2005 Office action. The time period for responding to the new Office action will be set to run from the mailing date of the new Office action.

Telephone inquiries regarding this communication should be directed to Petitions Attorney Steven Brantley at (571) 272-3203.

Charles Steven Brantley
Senior Petitions Attorney
Office of Petitions

UNITED STATES PATENT AND TRADEMARK OFFICE

Commissioner for Patents
United States Patent and Trademark Office
P.O. Box 1450
Alexandria, VA 22313-1450
www.uspto.gov

WENDEROTH, LIND & PONACK, L.L.P.
2033 K STREET N.W.
SUITE 800
WASHINGTON DC 20006-1021

COPY MAILED

JUL 16 2008

OFFICE OF PETITIONS

In re Application of	:	
Toru Ezure et al	:	
Application No. 10/322,518	:	DECISION GRANTING PETITION
Filed: December 19, 2002	:	UNDER 37 CFR 1.313(c)(2)
Attorney Docket No. 2002_1677A	:	

This is a decision on the petition under 37 CFR 1.313(c)(2), filed July 16, 2008, to withdraw the above-identified application from issue after payment of the issue fee.

The petition is **GRANTED**.

The above-identified application is withdrawn from issue for consideration of a submission under 37 CFR 1.114 (request for continued examination). *See* 37 CFR 1.313(c)(2).

Petitioner is advised that the issue fee paid on June 30, 2008 cannot be refunded. If, however, this application is again allowed, petitioner may request that it be applied towards the issue fee required by the new Notice of Allowance.[1]

Telephone inquiries should be directed to the undersigned at (571) 272-3208.

This application is being referred to Technology Center AU 1651 for processing of the request for continued examination under 37 CFR 1.114 and for consideration of the concurrently filed IDS.

Karen Creasy
Petitions Examiner
Office of Petitions

[1] *The request to apply the issue fee to the new Notice may be satisfied by completing and returning the new Part B – Fee(s) Transmittal Form (along with any balance due at the time of submission). Petitioner is advised that the Issue Fee Transmittal Form must be completed and timely submitted to avoid abandonment of the application.*

SPE RESPONSE FOR CERTIFICATE OF CORRECTION

Paper No.: ____

DATE : 2/4/05

TO SPE OF : ART UNIT 3712

SUBJECT : Request for Certificate of Correction on Patent No.: 6766915 B2

A response is requested with respect to the accompanying request for a certificate of correction.

Please complete this form and return with file, within 7 days to:
Certificates of Correction Branch - PK 3-915
Palm location **7580** - Tel. No. 305-8309

With respect to the change(s) requested, correcting Office and/or Applicant's errors, should the patent read as shown in the certificate of correction? No new matter should be introduced, nor should the scope or meaning of the claims be changed.

Virginia Tolbert

Thank You For Your Assistance

Certificates of Correction Branch

The request for issuing the above-identified correction(s) is hereby:
Note your decision on the appropriate box.

☒ **Approved**	All changes apply.
☐ **Approved in Part**	Specify below which changes **do not** apply.
☐ **Denied**	State the reasons for denial below.

Comments:

Harrison acting SPE 3714

SPE Art Unit

Cofc.

MR957-1257

OIPE JC34
NOV 2 6 2004
PATENT & TRADEMARK OFFICE

IN THE UNITED STATES PATENT AND TRADEMARK OFFICE

Inventor : Ming-Feng Wu :

Serial No. : 10/322,546 : Attn: Patent Certificate of Correction Branch
Filed : 19 December 2002

Patent No. : 6,766,915 B2 :
Issued : 27 July 2004

Title : DRINK CONTAINER FOR SMALL CHILDREN

REQUEST FOR CERTIFICATE OF CORRECTION
ATTACHING PROPER DRAWINGS

Mail Stop NO FEE
Honorable Commissioner for Patents
P.O. Box 1450
Alexandria, VA 22313-1450

Certificate
DEC 01 2004
of Correction

Approved 7/12/2005
Jha acting SPE 3714

Sir:

The above-referenced patent was filed as a patent application on 19 December 2002. The patent application had originally filed Figs. 1-7 in this case. On 26 June 2003, the undersigned attorney filed a Preliminary Amendment which included new drawings Figures 1-7. The Preliminary Amendment has been recorded and electronically scanned and is in the records of the USPTO.

The Examiner acted upon the Preliminary Amendment and the patent application proceeded through prosecution to issuance.

However, through what is believed to be some type of clerical error by the USPTO, the originally filed drawings issued in this case. It is believed that this is

DEC 0 6 2004

a clerical (and/or printing) error made at the USPTO and thus Applicant requests a Certificate of Correction inserting the proper drawings into the issued patent.

It is not believed that there are any charges associated with the filing of this Certificate of Correction since this appears to be a USPTO clerical and/or printing error. However, if there are any charges, the Honorable Commissioner for Patents is hereby authorized to charge Deposit Account 18-2011 for such charges.

Respectfully submitted,
FOR: ROSENBERG, KLEIN & LEE

Morton J. Rosenberg
Registration No. 26,049

Dated: 24 Nov. 2004

Suite 101
3458 Ellicott Center Drive
Ellicott City, MD 21043
Tel: 410-465-6678

Customer No.
04586

DEC 0 6 2004

Staple Here Only !

PRINTER'S TRIM LINE

UNITED STATES PATENT AND TRADEMARK OFFICE

CERTIFICATE OF CORRECTION

PATENT NO. : 6,766,915 B2

DATED : 27 July 2004

INVENTOR(S) : Ming-Feng Wu

It is certified that error appears in the above-identified patent and that said Letters Patent is hereby corrected as shown below:

In the Drawings:

Please cancel the drawings Figs. 1-7 as issued and replace with the attached Figs. 1-7.

MAILING ADDRESS OF SENDER:
Rosenberg, Klein & Lee
3458 Ellicott Center Drive
Suite 101
Ellicott City, MD 21043

PATENT NO. 6,766,915

No. of add'l copies @ 50¢ per page

FORM PTO 1050 (Rev. 2-93)

Staple Here Only !

PRINTER'S TRIM LINE

UNITED STATES PATENT AND TRADEMARK OFFICE

CERTIFICATE OF CORRECTION

PATENT NO. : 6,766,915 B2

DATED : 27 July 2004

INVENTOR(S) : Ming-Feng Wu

It is certified that error appears in the above-identified patent and that said Letters Patent is hereby corrected as shown below:

In the Drawings:

Please cancel the drawings Figs. 1-7 as issued and replace with the attached Figs. 1-7.

MAILING ADDRESS OF SENDER:
Rosenberg, Klein & Lee
3458 Ellicott Center Drive
Suite 101
Ellicott City, MD 21043

PATENT NO. 6,766,915

No. of add'l copies @ 50¢ per page

DEC 0 6 2004

O·I P E
NOV 2 6 2004
JC34
PATENT & TRADEMARK OFFICE

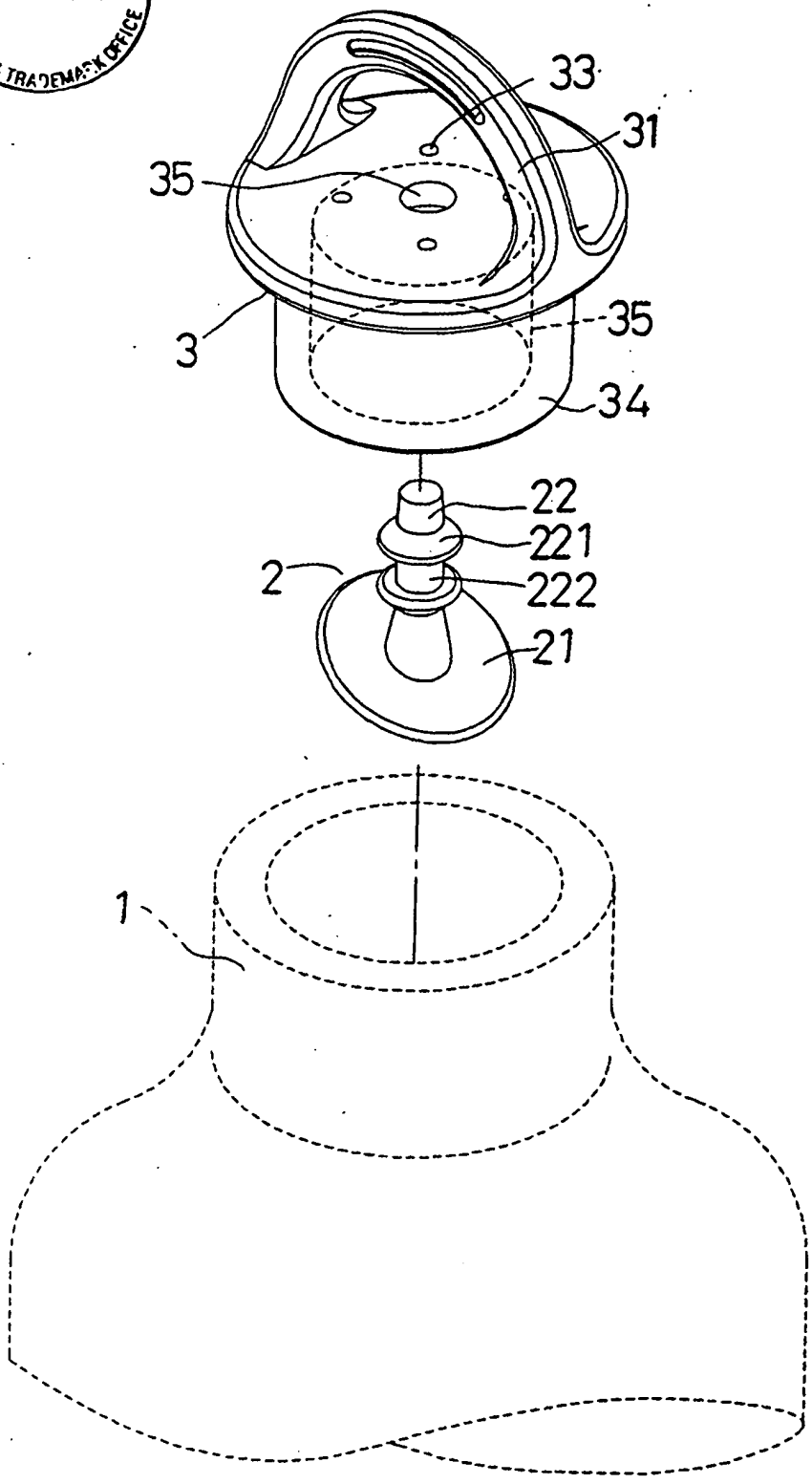

FIG. 1

C·I·P·E JC34
NOV 2 6 2004
PATENT & TRADEMARK OFFICE

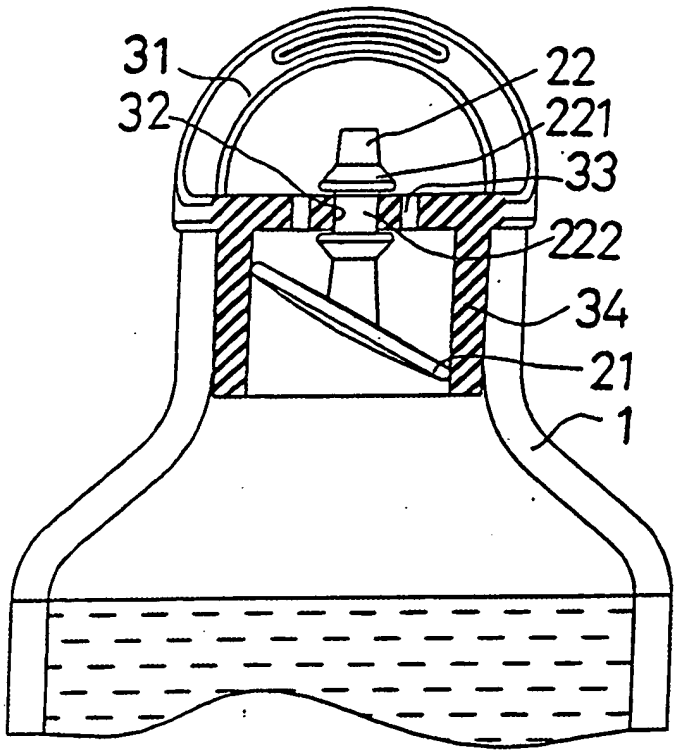

FIG. 2

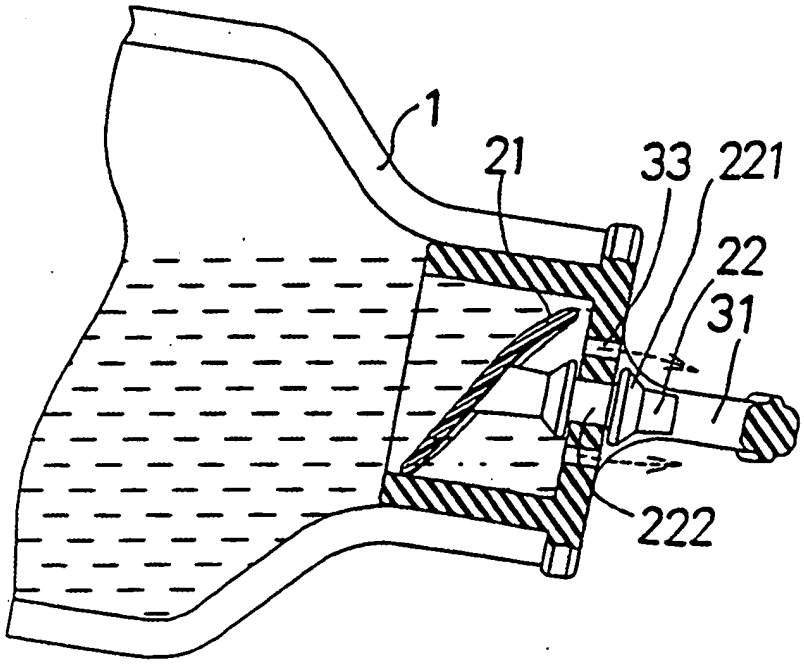

FIG. 3

O I P E JC34
NOV 26 2004
PATENT & TRADEMARK OFFICE

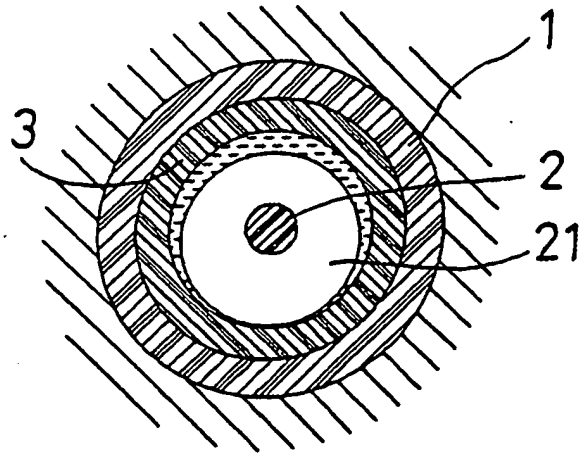

FIG. 4

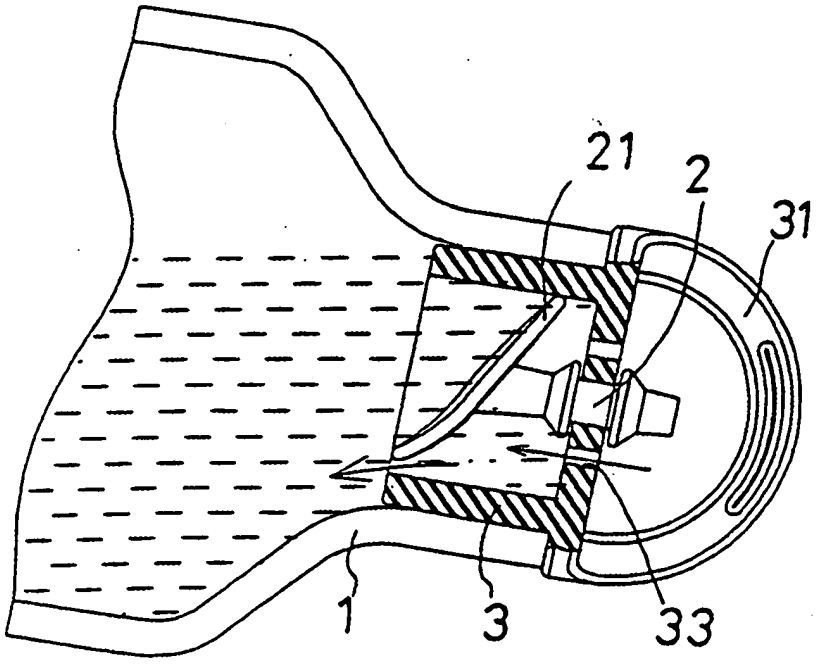

FIG. 5

O I P E JC34
NOV 26 2004
PATENT & TRADEMARK OFFICE

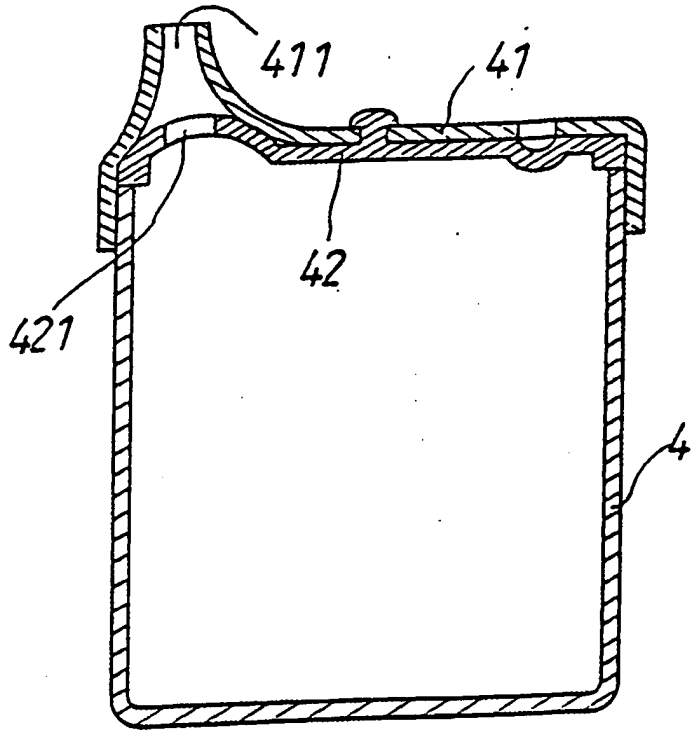

FIG. 6
(PRIOR ART)

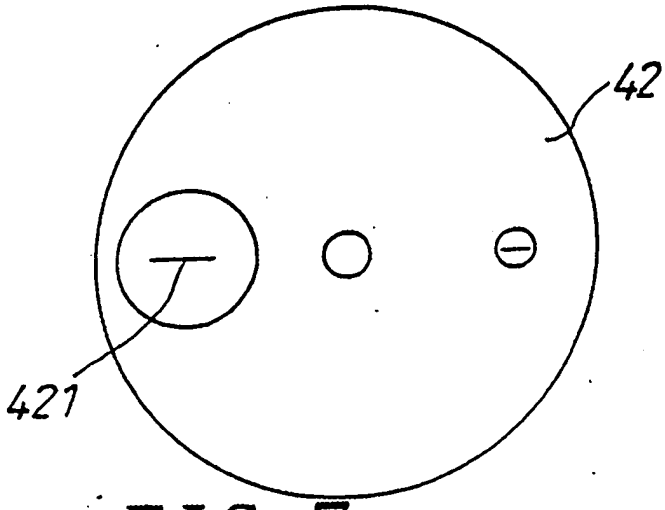

FIG. 7
(PRIOR ART)

UNITED STATES PATENT AND TRADEMARK OFFICE

Commissioner for Patents
United States Patent and Trademark Office
P.O. Box 1450
Alexandria, VA 22313-1450
www.uspto.gov

MAILED

SEP 20 2006

Technology Center 2100

C. Irvin McClelland
Oblon, Spivak, McClelland, Maier & Neustadt, P.C.
1940 Duke Street
Alexandria, VA 22314

In re Application of: Oikawa, et al.
Application No. 10/322,587
Attorney Docket No. 232078US2S
Filed: December 19, 2002
For: SEMICONDUCTOR DEVICE COMPRISING TRANSISTION DETECTING CIRCUIT AND METHOD OF ACTIVATING THE SAME

DECISION ON PETITION FOR CONSIDERATION OF INFORMATION DISCLOSURE STATEMENT *UNDER 37 CFR 1.181*

This is in response to the petition filed on September 5 and September 8, 2006, under 37 CFR §1.181 requesting consideration of the Information Disclosure Statement (IDS) indicated to have been submitted on April 4, 2003.

A petition under this section must include: (1) a statement of facts involved and (2) the point or points to be reviewed and the action requested. The petition filed September 5 & 8, 2006 includes elements (1) and (2) above.

The petition is **GRANTED**.

RELIEF REQUESTED

The instant petition under 37 CFR 1.181 requests that the Information Disclosure Statement (IDS) filed April 4, 2003 be considered by the Examiner.

ANALYSIS

The instant petition includes evidence of timely filing including a copy of the IDS papers including form PTO-1449 listing one reference along with a statement of relevancy, a separate listing of related applications, as well as a copy of the date-stamped filing receipt, identifying the aforementioned papers. A copy of the cited reference is also provided. The indicated OIPE receipt date of April 4, 2003 (prior to first Office action on the merits), is consistent with Petitioner's statement.

The provisions of 37 CFR §1.97 and 37 CFR §1.98 provide a mechanism by which patent applicants may comply with the duty of disclosure provided in 37 CFR §1.56. Since the IDS was therefore timely submitted to the USPTO, the reference listed thereon (along with related

applications) is entitled to consideration in accordance with MPEP 609, 37 CFR §1.97(b) and §1.98.

CONCLUSION

Accordingly, the petition is **GRANTED**.

The application is being **forwarded to the Technology Support Staff for processing** of the Information Disclosure Statement and related papers (copy provided on Spetember 5, 2006 with the instant petition) **and** then **to the Examiner for consideration thereof.**

Any inquiries related to this decision may be directed to the undersigned at (571) 272-3595.

Brian L. Johnson, SPRE
Technology Center 2100
Computer Architecture, Software, and Information Security

UNITED STATES PATENT AND TRADEMARK OFFICE

Commissioner for Patents
United States Patent and Trademark Office
P.O. Box 1450
Alexandria, VA 22313-1450
www.uspto.gov

Finnegan, Henderson, Farabow,
Garrett & Dunner, L.L.P.
1300 I Street, N.W.
Washington DC 20005-3315

COPY MAILED

AUG 1 2 2004

OFFICE OF PETITIONS

In re Application of :
Makoto Sekine :
Application No. 10/322,590 : ON PETITION
Filed: December 19, 2002 :
Attorney Docket No. 04329.2962 :

This is a decision on the petition under 37 CFR 1.314 filed July 26, 2004, to defer issuance of the patent.

The petition is GRANTED.

Issuance will be deferred for a period of one month from the date of this decision. At the end of this period, the application will be forwarded to the Publishing Division to be processed into a patent.

In the meantime, this application is being returned to the Technology Center for consideration of the amendment filed July 26, 2004.

If an additional deferral period is required, another petition and fee should be promptly submitted. The petition must include a showing of extraordinary circumstances; MPEP 1306.01 and be addressed as follows:

Any questions concerning this matter may be directed to the undersigned at (703) 305-9220.

Sherry D. Brinkley
Petitions Examiner
Office of Petitions
Office of the Deputy Commissioner
for Patent Examination Policy

PETITION TO ACCEPT UNINTENTIONALLY DELAYED PAYMENT OF MAINTENANCE FEE IN AN EXPIRED PATENT (37 CFR 1.378(c))

Patent Number	Issue Date (YYYY-MM-DD)	Application Number	Filing Date (YYYY-MM-DD)	Docket Number (if applicable)
6,674,202	2004-01-06	10/322,593	2002-12-19	402419

CAUTION: Maintenance fee (and surcharge, if any) payment must correctly identify: (1) the patent number and (2) the application number of the actual U.S. application leading to issuance of that patent to ensure the fee(s) is/are associated with the correct patent. 37 CFR 1.366(c) and (d).

SMALL ENTITY

☐ Patentee claims, or has previously claimed, small entity status. See 37 CFR 1.27.

LOSS OF ENTITLEMENT TO SMALL ENTITY STATUS

☐ Patentee is no longer entitled to small entity status. See 37 CFR 1.27(g)

NOT Small Entity

	Fee	Code
◉	3 ½ year	(1551)
○	7 ½ year	(1552)
○	11 ½ year	(1553)

Small Entity

	Fee	Code
○	3 ½ year	(2551)
○	7 ½ year	(2552)
○	11 ½ year	(2553)

SURCHARGE

The surcharge required by 37 CFR 1.20(i)(2) (Fee Code 1558) must be paid as a condition of accepting unintentionally delayed payment of the maintenance fee.

MAINTENANCE FEE (37 CFR 1.20(e)-(g))

The appropriate maintenance fee must be submitted with this petition.

STATEMENT

THE UNDERSIGNED CERTIFIES THAT THE DELAY IN PAYMENT OF THE MAINTENANCE FEE TO THIS PATENT WAS UNINTENTIONAL

PETITIONER(S) REQUEST THAT THE DELAYED PAYMENT OF THE MAINTENANCE FEE BE ACCEPTED AND THE PATENT REINSTATED

THIS PORTION MUST BE COMPLETED BY THE SIGNATORY OR SIGNATORIES

37 CFR 1.378(d) states: "Any petition under this section must be signed by an attorney or agent registered to practice before the Patent and Trademark Office, or by the patentee, the assignee, or other party in interest."

I certify, in accordance with 37 CFR 1.4(d)(4) that I am

◉ An attorney or agent registered to practice before the Patent and Trademark Office

○ A sole patentee

○ A joint patentee; I certify that I am authorized to sign this submission on behalf of all the other patentees.

○ A joint patentee; all of whom are signing this e-petition

○ The assignee of record of the entire interest

Patent Practitioner			
A signature of the applicant or representative is required in accordance with 37 CFR 1.33 and 10.18. Please see 37 CFR 1.4(d) for the form of the signature			
Signature	/Jeffrey A. Wyand/	Date (YYYY-MM-DD)	2008-05-20
Name	Jeffrey A. Wyand	Registration Number	29458

This collection of information is required by 37 CFR 1.378(c). The information is required to obtain or retain a benefit by the public which is to file (and by the USPTO to process) an application. Confidentiality is governed by 35 U.S.C. 122 and 37 CFR 1.11 and 1.14. This collection is estimated to take 1 hour to complete, including gathering, preparing, and submitting the completed application form to the USPTO. Time will vary depending upon the individual case. Any comments on the amount of time you require to complete this form and/ or suggestions for reducing this burden, should be sent to the Chief Information Officer, U.S. Patent and Trademark Office, U.S. Department of Commerce, P.O. Box 1450, Alexandria, VA 22313-1450. DO NOT SEND FEES OR COMPLETED FORMS TO THIS ADDRESS. **This form can only be used when in conjunction with EFS-Web. If this form is mailed to the USPTO, it may cause delays in reinstating the patent.**

Privacy Act Statement

The Privacy Act of 1974 (P.L. 93-579) requires that you be given certain information in connection with your submission of the attached form related to a patent application or patent. Accordingly, pursuant to the requirements of the Act, please be advised that: (1) the general authority for the collection of this information is 35 U.S.C. 2(b)(2); (2) furnishing of the information solicited is voluntary; and (3) the principal purpose for which the information is used by the U.S. Patent and Trademark Office is to process and/or examine your submission related to a patent application or patent. If you do not furnish the requested information, the U.S. Patent and Trademark Office may not be able to process and/or examine your submission, which may result in termination of proceedings or abandonment of the application or expiration of the patent.

The information provided by you in this form will be subject to the following routine uses:

1. The information on this form will be treated confidentially to the extent allowed under the Freedom of Information Act (5 U.S.C. 552) and the Privacy Act (5 U.S.C. 552a). Records from this system of records may be disclosed to the Department of Justice to determine whether the Freedom of Information Act requires disclosure of these record s.

2. A record from this system of records may be disclosed, as a routine use, in the course of presenting evidence to a court, magistrate, or administrative tribunal, including disclosures to opposing counsel in the course of settlement negotiations.

3. A record in this system of records may be disclosed, as a routine use, to a Member of Congress submitting a request involving an individual, to whom the record pertains, when the individual has requested assistance from the Member with respect to the subject matter of the record.

4. A record in this system of records may be disclosed, as a routine use, to a contractor of the Agency having need for the information in order to perform a contract. Recipients of information shall be required to comply with the requirements of the Privacy Act of 1974, as amended, pursuant to 5 U.S.C. 552a(m).

5. A record related to an International Application filed under the Patent Cooperation Treaty in this system of records may be disclosed, as a routine use, to the International Bureau of the World Intellectual Property Organization, pursuant to the Patent Cooperation Treaty.

6. A record in this system of records may be disclosed, as a routine use, to another federal agency for purposes of National Security review (35 U.S.C. 181) and for review pursuant to the Atomic Energy Act (42 U.S.C. 218(c)).

7. A record from this system of records may be disclosed, as a routine use, to the Administrator, General Services, or his/her designee, during an inspection of records conducted by GSA as part of that agency's responsibility to recommend improvements in records management practices and programs, under authority of 44 U.S.C. 2904 and 2906. Such disclosure shall be made in accordance with the GSA regulations governing inspection of records for this purpose, and any other relevant (i.e., GSA or Commerce) directive. Such disclosure shall not be used to make determinations about individuals.

8. A record from this system of records may be disclosed, as a routine use, to the public after either publication of the application pursuant to 35 U.S.C. 122(b) or issuance of a patent pursuant to 35 U.S.C. 151. Further, a record may be disclosed, subject to the limitations of 37 CFR 1.14, as a routine use, to the public if the record was filed in an application which became abandoned or in which the proceedings were terminated and which application is referenced by either a published application, an application open to public inspections or an issued patent.

9. A record from this system of records may be disclosed, as a routine use, to a Federal, State, or local law enforcement agency, if the USPTO becomes aware of a violation or potential violation of law or regulation.

UNITED STATES PATENT AND TRADEMARK OFFICE

Commissioner for Patents
United States Patent and Trademark Office
P.O. Box 1450
Alexandria, VA 22313-1450
www.uspto.gov

In re Patent No. 6674202
Issue Date: January 6,2004
Application No. 10322593
Filed: December 19,2002
Attorney Docket No. 402419

:
:DECISION GRANTING PETITION
:UNDER 37 CFR 1.378(c)
:

This is a decision on the electronic petition, filed May 20,2008 ,under 37 CFR 1.378(c) to accept the unintentionally delayed payment of the 3.5 year maintenance fee for the above-identified patent.

The petition is GRANTED.

The maintenance fee is accepted, and the above-identified patent reinstated as of May 20,2008 . This decision also constitutes notice that the fee has been accepted. An electronic copy of the petition and this decision has been created as an entry in an Image File Wrapper. Nevertheless, petitioner should print and retain an independent copy

Telephone inquires related to this electronic decision should be directed to the Electronic Business Center at 1-866-217-9197.

UNITED STATES PATENT AND TRADEMARK OFFICE

Commissioner for Patents
United States Patent and Trademark Office
P.O. Box 1450
Alexandria, VA 22313-1450
www.uspto.gov

Oblon, Spivak, McClelland, Maier & Neustadt, P. C.
1940 Duke Street
Alexandria, VA 22314

COPY MAILED

DEC 0 7 2005

OFFICE OF PETITIONS

In re Application of :
Shigekazu Enoki :
Application No. 10/322,600 : DECISION GRANTING PETITION
Filed: December 19, 2002 : UNDER 37 CFR 1.313(c)(2)
Attorney Docket No. 231981US2 :

This is a decision on the petition, filed December 5, 2005, under 37 CFR 1.313(c)(2) to withdraw the above-identified application from issue after payment of the issue fee.

The petition is **GRANTED**.

The above-identified application is withdrawn from issue for consideration of Request for Continued Examination (RCE) and submission under 37 CFR 1.114. See 37 CFR 1.313(c)(2).

Petitioner is advised that the issue fee paid on November 17, 2005 in the above-identified application cannot be refunded. If, however, the above-identified application is again allowed, petitioner may request that it be applied towards the issue fee required by the new Notice of Allowance.[1]

Telephone inquiries should be directed to the undersigned at (571) 272-3223.

Upon receipt of the file in the Office of Petitions and association of the instant petition, RCE, IDS and decision on petition with the file, the file will be forwarded to Technology Center AU 2852 for processing of the RCE under 37 CFR 1.114 and for consideration of the Information Disclosure Statement.

Marianne E. Jenkins
Petitions Examiner
Office of Petitions

[1] *The request to apply the issue fee to the new Notice may be satisfied by completing and returning the new Issue Fee Transmittal Form PTOL-85(b), which includes the following language thereon: "Commissioner for Patents is requested to apply the Issue Fee and Publication Fee (if any) or re-apply any previously paid issue fee to the application identified above." Petitioner is advised that, whether a fee is indicated as being due or not, the Issue Fee Transmittal Form* ***must*** *be completed and timely submitted to avoid abandonment. Note the language in bold text on the first page of the Notice of Allowance and Fee(s) Due (PTOL-85).*

UNITED STATES PATENT AND TRADEMARK OFFICE

UNDER SECRETARY OF COMMERCE FOR INTELLECTUAL PROPERTY AND
DIRECTOR OF THE UNITED STATES PATENT AND TRADEMARK OFFICE
WASHINGTON, DC 20231
www.uspto.gov

Alston & Bird LLP
Bank of America Plaza
101 South Tyron Street, Suite 4000
Charlotte, NC 28280-4000

MAILED

JUN 16 2003

DIRECTOR'S OFFICE
TECHNOLOGY CENTER 3600

In re application of
Barry Craig Smith et al.
Application No.10/322,608 :
Filed: December 19, 2002 :
For: METHODS, SYSTEMS, AND ARTICLES OF MANUFACTURE FOR MANAGING THE DELIVERY OF CONTENT :

DECISION ON REQUEST FOR WITHDRAWAL OF ATTORNEY

This is a decision on the request filed on January 10, 2003, under 37 CFR 1.36 and MPEP 402.06, to withdraw as the attorney of record in the above-identified application. The delay in treating this petition is sincerely regretted.

The request is **NOT APPROVED as MOOT**.

Under 37 CFR 1.36 an attorney may withdraw only upon application to and approval by the Commissioner. It should be noted that a withdrawal is effective when approved, not when filed. Besides giving due notice to his or her client and delivering to the client all papers and property to which the client is entitled as specified under 37 CFR 10.40, approval of such a request requires that the following conditions be met:

A) Each attorney of record must sign the notice of withdrawal, or the notice must contain a clear indication of one attorney signing on behalf of another, because the Office does not recognize law firms;

B) A proper reason for the withdrawal as enumerated in 37 CFR 10.40(b) or subsection (1)-(6) of 37 CFR 10.40(c) must be provided; and

C) If withdrawal is requested in accordance with 37 CFR 10.40(c) above, there must be at least 30 days between approval of the withdrawal and the later of the expiration date of a time period for reply or the expiration date of the period which can be obtained by a petition and fee for extension of time under 37 CFR 1.136(a).

The request to withdraw as attorneys by Joseph E. Palys, filed January 10, 2003 is dismissed as moot because of the acceptance of the revocation of power of attorney filed March 26, 2003.

Kenneth J. Dorner
Special Programs Examiner
Patent Technology Center 3600
(703) 308-0866
(703) 605-0586 (facsimile)

KJD/dxn: 6/9/03

Cc: Finnegan, Henderson, Farabow,
Garrett & Dunner, L.L.P.
1300 I Street, N.W.
Washington, D.C. 20005

UNITED STATES PATENT AND TRADEMARK OFFICE

COMMISSIONER FOR PATENTS
UNITED STATES PATENT AND TRADEMARK OFFICE
P.O. BOX 1450
ALEXANDRIA, VA 22313-1450
WWW.USPTO.GOV

Paper No. None

SUGHRUE MION, PLLC
2100 Pennsylvania Avenue, NW
Washington DC 20037-3213

COPY MAILED
SEP 25 2006
OFFICE OF PETITIONS

In re Patent No. 6,831,778 :
Application No. 10/322,621 :
Filing Date: December 19, 2002 :
Issue Date: December 14, 2004 :
Inventor: Taotao Yang et al. : DECISION ON PETITION
Attorney Docket Number: Q73451 : 37 C.F.R. §1.182
Title of Invention: HYBRID :
COMPONENT AND METHOD FOR :
COMBINING TWO PUMPING LIGHTS :
AND DEPOLARIZING THEM :
SIMULTANEOUSLY AND OPTICAL :
AMPLIFIER THEREFOR :

This is a decision on the petition filed May 30, 2006, pursuant to 37 C.F.R. §1.182, requesting issuance of a duplicate Letters Patent for the above-identified patent.

The file record discloses that application No. 10/322,621 matured into U.S. Patent No. 6,831,778 on December 14, 2004. The electronic records further reveal that on that same day, the Patent Grant was mailed to the address of record.

With the present petition, Petitioner has explained that the original Letters Patent has been lost.

Accordingly, the petition is **GRANTED**. Petitioner's Deposit Account has been charged in the amount of $400.00.

The Publishing Division is directed to issue duplicate Letters Patent. A copy of this decision is being forwarded to Publishing Division for issuance of a duplicate Letters Patent. The patent file is being forwarded to the Files Repository.

Telephone inquiries regarding *this decision* should be directed to the undersigned at (571) 272-3225[1]. All other inquiries concerning examination procedures or status of the application should be directed to the Technology Center.

Paul Shanoski
Senior Attorney
Office of Petitions
United States Patent and Trademark Office

1 Petitioner will note that all practice before the Office should be in writing, and the action of the Office will be based exclusively on the written record in the Office. See 37 C.F.R. §1.2. As such, Petitioner is reminded that no telephone discussion may be controlling or considered authority for Petitioner's further action(s).

UNITED STATES PATENT AND TRADEMARK OFFICE

COMMISSIONER FOR PATENTS
UNITED STATES PATENT AND TRADEMARK OFFICE
P.O. BOX 1450
ALEXANDRIA, VA 22313-1450
www.uspto.gov

Paper No. 13

MAIL

APR 2 0 2004

DIRECTOR OFFICE
TECHNOLOGY CENTER 2600

BARNES & THORNBURG
750-17TH STREET NW
SUITE 900
WASHINGTON DC 20006

In Re Application of :
Hark C. Chan :
Application Serial No. 10/322,624 :
Filed: December 19, 2002 :
For: **INFORMATION DISTRIBUTION AND PROCESSING SYSTEM** :

DECISION ON PETITION TO EXPUNGE

This is a response to the petition filed December 22, 2003 which is being treated under 37 CFR 1.59(b), to expunge information from the above identified application.

Petitioner requests that "the additional information" unintentionally submitted in the Information Disclosure Statement, filed August 28, 2003, be expunged from the record. MPEP 724.05(II) states in part:

> A petition to expunge information unintentionally submitted in an application (other than information forming part of the original disclosure) may be filed under 37 CFR 1.59(b), provided that:
> (A) the Office can effect such return prior to the issuance of any patent on the application in issue;
> (B) it is stated that the information submitted was unintentionally submitted and the failure to obtain its return would cause irreparable harm to the party who submitted the information or to the party in interest on whose behalf the information was submitted;
> (C) the information has not otherwise been made public;
> (D) there is a commitment on the part of the petitioner to retain such information for the period of any patent with regard to which such information is submitted;
> (E) it is established to the satisfaction of the Commissioner that the information to be returned is not material information under 37 CFR 1.56; and
> (F) the petition fee as set forth in 37 CFR 1.17(h) is included.
>
> A request to return information that has not been clearly identified as information that may be later subject to such a request by marking and placement in a separate sealed envelope or container shall be treated on a case-by-case basis. Applicants should note that unidentified information that is a trade secret, proprietary, or subject to a protective order that is submitted in an Information Disclosure Statement may inadvertently be placed in an Office prior art search file by the examiner due to the lack of such identification and may not be retrievable. [emphasis added]

"Materiality" is defined as any information which the examiner considers as being important to a determination of patentability of the claims. [emphasis added]

Petitioner has not complied with parts B and E above and the petition does not clearly identify the information requested to be expunged. Petitioner states "..the Applicant hereby requests that the Additional Information be withdrawn and expunged with respect to the '642 Application, the '257 Application, the '124 Application and the '338 Application, and that the three boxes of materials be returned to the undersigned...". Given that the "three boxes of materials" were not submitted in the instant application, it is unclear what Petitioner wants expunged within the instant application.

Accordingly the petition is **DENIED**.

Petitioner is given **TWO MONTHS** from the date of this decision to complete the requirements as described above. This period is non-extendable under 37 CFR 136(a).

Dwayne D. Bost
Special Program Examiner
Technology Center 2600
Communications

UNITED STATES PATENT AND TRADEMARK OFFICE

Commissioner for Patents
United States Patent and Trademark Office
P.O. Box 1450
Alexandria, VA 22313-1450
www.uspto.gov

MAILED

JUN 2 1 2010

OFFICE OF PETITIONS

JAMES E. MROSE
4719 RIVER ROAD
BETHESDA MD 20816-3034

In re Application of

PALFY, Valerie et al.
Application No. 10/322,648
Filed: December 19, 2002
Attorney Docket No. **09781-003001**

DECISION ON PETITION
TO WITHDRAW
FROM RECORD

This is a decision on the Request to Withdraw as attorney or agent of record under 37 C.F.R. § 1.36(b), filed May 18, 2010.

The request is **NOT APPROVED**.

The Office has revised its change in procedure for request to withdraw from representation applies to requests filed on or after May 12, 2008.

The Office will no longer accept address changes to a new practitioner or law firm filed with a Request, absent the filing of a power of attorney to the new representative. The Office will either change the correspondence address of record to the most current address information provided for the assignee of the entire interest who properly became of record under 37 CFR 3.71 or, if no assignee of the entire interest has properly been made of record under 37 CFR 3.71, the most current address information provided for the first named inventor.

Accordingly, the request to withdraw from record cannot be approved because the request to change the correspondence address is not that of: (1) the first named inventor; or (2) an assignee of the entire interest under 37 C.F.R 3.71 who has properly intervened.

If an assignee has intervened in this application, then a Statement under 37 CFR 3.73(b) or a copy of the actual assignment must be submitted with a renewed request.

All future communications from the Office will continue to be directed to the above-listed address until otherwise notified by applicant.

Telephone inquiries concerning this decision should be directed to Tredelle Jackson at 571-272- 2783.

/Tredelle D. Jackson/
Paralegal Specialist
Office of Petitions

cc: **VALERIE PALFY AND DON A. SKOMSKY**
P.O. BOX 11
PAOLI, PA 19301

UNITED STATES PATENT AND TRADEMARK OFFICE

Commissioner for Patents
United States Patent and Trademark Office
P.O. Box 1450
Alexandria, VA 22313-1450
www.uspto.gov

OBLON, SPIVAK, MCCLELLAND, MAIER &
NEUSTADT, P.C.
1940 DUKE STREET
ALEXANDRIA VA 22314

COPY MAILED

JAN 31 2005

OFFICE OF PETITIONS

In re Application of :
Isamu Kaneko et al :
Application No. 10/322,665 :
Filed: December 19, 2002 :
Attorney Docket No. 231906USOCONT :

ON PETITION

This is a decision on the petition, filed January 27, 2005, under 37 CFR 1.313(c)(2) to withdraw the above-identified application from issue after payment of the issue fee.

The petition is **GRANTED.**

The above-identified application is withdrawn from issue for consideration of a submission under 37 CFR 1.114 (request for continued examination). See 37 CFR 1.313(c)(2).

P titioner is advised that the issue fee paid on August 11, 2004 in the above-identified application cannot be refunded. If, however, the above-identified application is again allowed, petitioner may request that it be applied towards the issue fee required by the new N tice of Allowance.[1]

Telephone inquiries should be directed to the undersigned at (571) 272-3208.

The examiner of Technology Center AU 1752 will consider the request for continued examination under 37 CFR 1.114.

Karen Creasy

Karen Creasy
Petitions Examiner
Office of Petitions
Office of the Deputy Commissioner
for Patent Examination Policy

---

[1] The request to apply the issue fee to the new Notice may be satisfied by completing and returning the new Issue Fee Transmittal Form PTOL-85(b), which includes the following language thereon: "Commissioner for Patents is requested to apply the Issue Fee and Publication Fee (if any) or re-apply any previously paid issue fee to the application identified above." Petitioner is advised that, whether a fee is indicated as being due or not, the Issue Fee Transmittal Form **must** be completed and timely submitted to avoid abandonment. Note the language in bold text on the first page of the Notice of Allowance and Fee(s) Due (PTOL-85).

UNITED STATES PATENT AND TRADEMARK OFFICE

UNITED STATES DEPARTMENT OF COMMERCE
United States Patent and Trademark Office
Address: COMMISSIONER FOR PATENTS
P.O. Box 1450
Alexandria, Virginia 22313-1450
www.uspto.gov

BIRCH STEWART KOLASCH & BIRCH
PO BOX 747
FALLS CHURCH, VA 22040-0747

Mail Date: 06/01/2010

Applicant	: Atsushi Murai	: DECISION ON REQUEST FOR
Patent Number	: 7641642	: RECALCULATION of PATENT
Issue Date	: 01/05/2010	: TERM ADJUSTMENT IN VIEW
Application No	: 10/322,667	: OF WYETH AND NOTICE OF INTENT TO
Filed	: 12/19/2002	: ISSUE CERTIFICATE OF CORRECTION
		:

The Request for Recalculation is **GRANTED** to the extent indicated.

The patent term adjustment has been determined to be **327** days. The USPTO will *sua sponte* issue a certificate of correction reflecting the amount of PTA days determined by the recalculation.

Prior to the issuance of the certificate of correction, the USPTO will afford patentee an opportunity to be heard and request reconsideration. Accordingly, patentee has **one month or thirty (30) days**, whichever is longer, to file a request for reconsideration of this patent term adjustment calculation. See 35 U.S.C. 154(b)(3)(B)(ii) and 37 CFR 1.322(a)(4). No extensions of time will be granted under 37 CFR 1.136.

Patentee should use document code PET.OP if electronically filing a request for reconsideration of this patent term adjustment calculation. The patentee must also include the information required by 37 CFR 1.705(b)(2) and the fee required by 37 CFR 1.18(e). If patentee does not file a timely request for reconsideration of this patent term adjustment calculation including the information required by 37 CFR 1.705(b)(2) and the fee required by 37 CFR 1.18(e), the USPTO will issue a certificate of correction reflecting the PTA determination noted above.

Patentee should be aware that in order to preserve the right to review in the United States District Court for the District of Columbia of the USPTO patent term adjustment determination, patentee must ensure that he or she also take the steps required under 35 U.S.C. 154(b)(4)(A) in a timely manner. Nothing in the request for recalculation should be construed as providing an alternative time frame for commencing a civil action under 35 U.S.C. 154(b)(4)(A).

Any questions concerning this decision should be directed to the Office of Patent Legal Administration at 571-272-7702.

UNITED STATES PATENT AND TRADEMARK OFFICE

COMMISSIONER FOR PATENTS
UNITED STATES PATENT AND TRADEMARK OFFICE
P.O. BOX 1450
ALEXANDRIA, VA 22313-1450
www.uspto.gov

Dr. Fingerle-Rowson
Klinikum Grosshadern of Ludwig Maximilians University
Medical Clinic III/F5B
Hematology & Oncology
Marchioninistr. 15
81377 Munchen
Germany **AIR MAIL**

COPY MAILED

DEC 05 2003

OFFICE OF PETITIONS

In re Application of :
FINGERLE-ROWSON :
Application No. 10/322,685 : LETTER
Filed: December 19, 2002 :
Attorney Docket No. 9511-095-27 :
For: NON-HUMAN MAMMAL WITH :
DISRUPTED OR MODIFIED MIF GENE, AND:
USES THEREOF :

Dear Dr. Fingerle-Rowson:

You are named as the sole inventor in the above-identified United States patent application filed under the provisions of 35 U.S.C. 116 (United States Code) and 37 CFR 1.47(b), Rules of Practice in Patent Cases. Should a patent be granted on the application you will be designated therein as a joint inventor.

As a named inventor you are entitled to inspect any paper in the file wrapper of the application, order copies of all or any part thereof (at a prepaid cost per 37 CFR 1.19) or make your position of record in the application. Alternatively, you may arrange to do any of the preceding through a registered patent attorney or agent presenting written authorization from you. If you care to join the application, counsel of record (see below) would presumably assist you. Joining in the application would entail the filing of an appropriate oath or declaration by you pursuant to 37 CFR 1.63.

Requests for information regarding your application should be directed to the File Information Unit at (703) 308-2733. Information regarding how to pay for and order a copy of the application, or a specific paper in the application, should be directed to Certification Division at (703) 308-9726 or 1-800-972-6382 (outside the Washington D.C. area).

Christina Tartera Donnell

Christina Tartera Donnell
Senior Petitions Attorney
Office of Petitions

PIPER RUDNICK LLP
Supervisor, Patent Prosecution Services
1200 Nineteenth Street, N.W.
Washington DC 20036-2412

UNITED STATES PATENT AND TRADEMARK OFFICE

COMMISSIONER FOR PATENTS
UNITED STATES PATENT AND TRADEMARK OFFICE
P.O. BOX 1450
ALEXANDRIA, VA 22313-1450
www.uspto.gov

Paper No. 9

PIPER RUDNICK LLP
Supervisor, Patent Prosecution Services
1200 Nineteenth Street, N.W.
Washington DC 20036-2412

COPY MAILED

DEC 05 2003

OFFICE OF PETITIONS

In re Application of :
FINGERLE-ROWSON :
Application No. 10/322,685 : DECISION ACCORDING STATUS
Filed: December 19, 2002 : UNDER 37 CFR 1.47(b)
Attorney Docket No. 9511-095-27 :
For: NON-HUMAN MAMMAL WITH :
DISRUPTED OR MODIFIED MIF GENE, AND :
USES THEREOF :

This is in response to the petition under 37 CFR 1.47(b), filed Monday, October 6, 2003. Petitioner obtained a five-month extension of time to reply. Accordingly, the petition is timely filed.

The petition is **granted**.

Petitioner has shown that Gunter R. Fingerle-Rowson, the non-signing inventor, has refused to join in the filing of the above-identified application after having been presented with the application papers. Specifically, the Statement of Facts of Patrick R. Delany establishes that the inventor was mailed the application papers, including the specification, claims and drawings, but failed to respond to the request that he sign the declaration. In addition, petitioner has shown that Cytokin PharmaSciences, Inc. has a proprietary interest in the above-identified application with a memorandum of law establishing that a court of competent jurisdiction would award title to Cytokin PharmaSciences, Inc. The petition fee has been paid. Lastly, petitioner has submitted a declaration in compliance with 37 CFR 1.63 and 1.64 and demonstrated that such action is necessary to prevent irreparable damage.

This application and papers have been reviewed and found in compliance with 37 CFR 1.47(b). This application is hereby accorded Rule 1.47(b) status. As provided in Rule 1.47(c), this Office will forward notice of this application's filing to the non-signing inventor at the address given in the petition. Notice of the filing of this application will also be published in the Official Gazette.

Telephone inquiries should be directed to the undersigned at (703) 306-5589.

Christina Tartera Donnell

Christina Tartera Donnell
Senior Petitions Attorney
Office of Petitions

UNITED STATES PATENT AND TRADEMARK OFFICE

Commissioner for Patents
United States Patent and Trademark Office
P.O. Box 1450
Alexandria, VA 22313-1450
www.uspto.gov

WOODCOCK WASHBURN, LLP
ONE LIBERTY PLACE, 46TH FLOOR
1650 MARKET STREET
PHILADELPHIA, PA 19103

COPY MAILED

MAY 30 2006

OFFICE OF PETITIONS

In re Application of	:	
Rabitz, et. al.	:	DECISION ON REQUEST
Application No. 10/322,693	:	TO WITHDRAW FROM
Filed: December 18, 2002	:	RECORD
Attorney Docket No. PU-0221	:	

This is a decision on the Request to Withdraw as attorney or agent of record under 37 CFR § 1.36(b), filed by facsimile transmission on November 21, 2005.

The request is **APPROVED**.

A grantable request to withdraw as attorney/agent of record must be signed by every attorney/agent seeking to withdraw or contain a clear indication that one attorney is signing on behalf of another/others. A request to withdraw will not be approved unless at least 30 (thirty) days would remain between the date of approval and the later of the expiration date of a time to file a response or the expiration date of the maximum time period which can be extended under 37 CFR § 1.136(a).

The request was signed by Janet E. Reed on behalf of all attorneys or agents of record who are associated with Customer No. 23377.

A review of the record shows that on December 18, 2002, power of attorney was associated with Customer Number 23377. However, on September 29, 2003 an executed Oath/Declaration was filed appointing power of attorney to the firm of Cooper & Dunham, LLP. In light of the above, all attorneys/agents associated with the Customer Number 23377 have been withdrawn.

The correspondence address of record has been changed and the new correspondence address is the address indicated below.

There is an outstanding Office action mailed February 24, 2006 that requires a reply from the applicant.

Telephone inquiries concerning this decision should be directed to Andrea Smith at (571) 272-3226.

Andrea Smith
Petitions Examiner
Office of Petitions

Conferee: BSP

cc: COOPER & DUNHAM, LLP
1185 AVENUE OF THE AMERICAS
NEW YORK, NY 10036

UNITED STATES PATENT AND TRADEMARK OFFICE

Commissioner for Patents
United States Patent and Trademark Office
P.O. Box 1450
Alexandria, VA 22313-1450
www.uspto.gov

VISTA IP LAW GROUP LLP
2040 MAIN STREET, SUITE 710
IRVINE, CA 92614

MAILED

JUL 19 2010

OFFICE OF PETITIONS

In re Application of :
Dorin PANESCU :
Application No. 10/322,695 : ON PETITION
Filed: December 18, 2002 :
Attorney Docket No. 01-195 (US02) :

This is a decision on the petition under the unintentional provisions of 37 CFR 1.137(b), filed June 7, 2010, to revive the above-identified application.

The petition is **GRANTED**.

The application became abandoned for failure to timely file a reply within the meaning of 37 CFR 1.113 to the final Office action of June 5, 2007. The proposed reply required for consideration of a petition to revive must be a Notice of Appeal (and appeal fee required by 37 CFR 41.20(b)(2), an amendment that *prima facie* places the application in condition for allowance, a Request for Continued Examination and submission (37 CFR 1.114), or the filing of a continuing application under 37 CFR 1.53(b). See MPEP 711.03(c)(II)(A)(2). No extensions of time pursuant to the provisions of 37 CFR 1.136(a) were obtained. Accordingly, the date of abandonment of this application is September 6, 2007.

The petition satisfies the requirements of 37 CFR 1.137(b) in that petitioner has supplied (1) the reply in the form of a Request for Continued Examination (RCE) and fee of $810, and the submission required by 37 CFR 1.114; (2) the petition fee of $1620; and (3) a proper statement of unintentional delay.

Telephone inquiries concerning this decision should be directed to the undersigned at (571) 272-6735.

This application is being referred to Technology Center 3737 for further processing in the normal course of business.

/Diane C. Goodwyn/
Diane C. Goodwyn
Petitions Examiner
Office of Petitions

SPE RESPONSE FOR CERTIFICATE OF CORRECTION

Paper No.:

DATE : May 23, 2005

TO SPE OF : ART UNIT 3746

SUBJECT : Request for Certificate of Correction on Patent No.: 6,837,056 B2

A response is requested with respect to the accompanying request for a certificate of correction.

Please complete this form and return with file, within **7** days to:
Certificates of Correction Branch - PK 3-910
Palm location **7590** - Tel. No. 305-8201

With respect to the change(s) requested, correcting Office and/or Applicant's errors, should the patent read as shown in the certificate of correction? No new matter should be introduced, nor should the scope or meaning of the claims be changed.

Thank You For Your Assistance **Certificates of Correction Branch**

The request for issuing the above-identified correction(s) is hereby:
Note your decision on the appropriate box.

☑ **Approved** — **All** changes apply.

☐ **Approved in Part** — Specify below which changes **do not** apply.

☐ **Denied** — State the reasons for denial below.

Comments:

Timothy S. Thorpe
Supervisory Patent Examiner
Group 3700

SPE: _____ **Art Unit** 3746

UNITED STATES PATENT AND TRADEMARK OFFICE

COMMISSIONER FOR PATENTS
UNITED STATES PATENT AND TRADEMARK OFFICE
WASHINGTON, D.C. 20231
www.uspto.gov

APPLICATION NUMBER	FILING/RECEIPT DATE	FIRST NAMED APPLICANT	ATTORNEY DOCKET NUMBER
10/322,757	12/19/2002	Donald Matthew Burns	A-7735.RNFMP/cat

CONFIRMATION NO.
5302

Hoffman, Wasson & Gitler, P.C.
Suite 522
2361 Jefferson Davis Highway
Arlington VA 22202

Decision Dismissing Petition under 37 CFR 1.138(c)

The declaration of express abandonment will not be recognized

This is in response to the petition under 37 CFR 1.138(c) for express abandonment to avoid publication of the above-identified application, for which a faxed copy of the original petition was received on June 23, 2003.
The petition is dismissed.

The express abandonment will **not** be recognized for the reason(s) indicated below:

1. ☐ The petition under 37 CFR 1.138(c) was not received in sufficient time to permit the appropriate officials to recognize the abandonment and remove the application from the publication process.

2. ■ The Application was published on July 17, 2003, in compliance with 35 U.S.C. 122(b), the publication number is US20030132378A1, and it is available on the USPTO web site at http://www.uspto.gov/patft/index.html.

The application **has been published** as scheduled.

Telephone inquiries should be directed to the Office of Patent Publication, the Pre-Grant Publication Division, at 703-605-4283.

Barbara J. Debnam
Office of Patent Publication
Pre-Grant Publication Division

OIPE JC25
JAN 31 2005
PATENT & TRADEMARK OFFICE

JFW

PTO/SB/83 (09-04)
Approved for use through 11/30/2005. OMB 0651-0035
U.S. Patent and Trademark Office; U.S. DEPARTMENT OF COMMERCE
Under the Paperwork Reduction Act of 1995, no persons are required to respond to a collection of information unless it displays a valid OMB control number.

REQUEST FOR WITHDRAWAL AS ATTORNEY OR AGENT AND CHANGE OF CORRESPONDENCE ADDRESS		
	Application Number	10/322,802
	Filing Date	December 19, 2002
	First Named Inventor	Gary L. DAHMS
	Art Unit	1764
	Examiner Name	Not Yet Assigned
	Attorney Docket Number	544312000400

Approved 7/20/05
JMStone
Jacqueline M. Stone, Director
Technology Center 1700

To: Commissioner for Patents
P.O. Box 1450
Alexandria, VA 22313-1450

Please withdraw me as attorney or agent for the above identified patent application, and

- [ ] all the attorneys/agents of record.
- [ ] the attorneys/agents (with registration numbers) listed on the attached paper(s), or
- [X] the attorneys/agents associated with Customer Number 25227

NOTE: This box can only be checked when the power of attorney of record in the application is to all the practitioners associated with a customer number.

The reasons for this request are:
Application is being transferred to another attorney.

This request is being made at the request of the assignee, **Unified Environmental.**

CORRESPONDENCE ADDRESS

1. [ ] The correspondence address is NOT affected by this withdrawal.
2. [ ] Change the correspondence address and direct all future correspondence to:

[ ] The address associated with Customer Number:

OR

[X] Firm or Individual Name	James Remenick (Powell Goldstein LLP)				
Address	901 New York Avenue, NW Third Floor				
City	Washington	State	DC	Zip	20001-4413
Country	US				
Telephone	(202)347-0066			Fax	(202) 624-7222
Signature					
Name	Wayne C. Jaeschke, Jr.		Registration No.		38,503
Date	January 31, 2005		Telephone No.		(703) 760-7756

NOTE: Withdrawal is effective when approved rather than when received. Unless there are at least 30 days between approval of withdrawal and the expiration date of a time period for response or possible extension period, the request to withdraw is normally disapproved.

Commissioner for Patents
United States Patent and Trademark Office
P.O. Box 1450
Alexandria, VA 22313-1450
www.uspto.gov

CO-OFFICE OF PATENT COUNSEL
53510 SILVERGATE AVE RM 103
SAN DIEGO,CA 92152-5765

COPY MAILED

JUL 02 2007

OFFICE OF PETITIONS

In re Application of :
Jon R. Losee et al. :
Application No. 10/322,813 : ON PETITION
Filed: December 18, 2002 :
Attorney Docket No. 83098 :

This is a decision on the petition under 37 CFR 1.137(b)[1], filed February 21, 2007 to revive the above-identified application.

The petition is **GRANTED**.

This application became abandoned February 7, 2006 for failure to timely reply to the final Office Action mailed November 4, 2005, which set a three month period for response. Accordingly, a Notice of Abandonment was mailed July 11, 2006.

Petitioner has submitted a Request for Continued Examination (RCE) and an amendment as the submission required under 37 CFR 1.114.

This matter is being referred to Technology Center 2884 for processing of the RCE.

Telephone inquiries related to this decision should be directed to the undersigned Petitions Attorney at (571) 272-3212.

Patricia Faison-Ball

Patricia Faison-Ball
Senior Petitions Attorney
Office of Petitions

---

[1]Effective December 1, 1997, the provisions of 37 CFR 1.137(b) now provide that where the delay in reply was unintentional, a petition may be filed to revive an abandoned application or a lapsed patent pursuant to 37 CFR 1.137(b). A grantable petition filed under the provisions of 37 CFR 1.137(b) must be accompanied by:

(1) the required reply, unless previously filed. In a nonprovisional application abandoned for failure to prosecute, the required reply may be met by the filing of a continuing application. In an application or patent, abandoned or lapsed for failure to pay the issue fee or any portion thereof, the required reply must be the payment of the issue fee or any outstanding balance thereof.

(2) the petition fee as set forth in 37 CFR 1.17(m);

(3) a statement that the entire delay in filing the required reply from the due date for the reply until the filing of a grantable petition pursuant to 37 CFR 1.137(b) was unintentional. The Commissioner may required additional information where there is a question whether the delay was unintentional; and

(4) any terminal disclaimer (and fee as set forth in 37 CFR 1.20(d)) required pursuant to 37 CFR 1.137(c)).

UNITED STATES PATENT AND TRADEMARK OFFICE

Commissioner for Patents
United States Patent and Trademark Office
P.O. Box 1450
Alexandria, VA 22313-1450
www.uspto.gov

Amylan Pharmaceuticals, Inc.
9360 Towne Center Drive
San Diego, CA 92121

COPY MAILED

FEB 0 5 2007

OFFICE OF PETITIONS

In re Application of:
Coolidge et al.
Application No. 10/322,839
Patent No. 7,056,887
Filing Date: 12/18/2002

: Decision Dismissing Petition

This decision is in response to Applicants' "APPLICATION FOR PATENT TERM ADJUSTMENT UNDER 37 CFR 1.705" timely[1] filed on JULY 06, 2006. Applicants' request that the PTA be adjusted to reflect a determination of either 455 days or at the very least 399 days of PTA at the time of the issuance of the application.

Applicants' petition for PTA adjustment is **DISMISSED.**

Applicants are given One Month or Thirty days whichever is greater to respond to this decision. No extensions of time will be granted under 37 CFR 1.136.

Applicants argue that the Office erred in assessing a one hundred and twenty (120) day delay for the submission of an oath or declaration after the mailing of the notice of allowance. Applicants assert that the request for the new oath or declaration was by the Office and therefore applicant was complying with the request and should not be penalized. Applicants assert that the ADS carried the proper citizenship.

Applicants arguments are not deemed persuasive. The Office notes that the submission of a supplemental oath or declaration filed after the date of the mailing of the notice of allowance is considered a failure to engage in reasonable efforts to conclude prosecution of the application. The Office posted a notice in the Official Gazette notifying applicants of such policy. See 1247 Off. Gaz. Pat. Off 111 (June 26, 2001). The Office notes that requirement of citizenship must be in the oath or declaration because such requirement is statutory. See MPEP 602.03. Accordingly, the oath was defective and a new oath was required. The assessment of 120 days is accurate. See 37 CFR 1.704(c)(10). Applicants' reduction begins on the date of the submission of the Oath or declaration and ends on the date of reply by applicant or four months whichever is less. See 37 CFR 1.704(c)(10).

The Office has assessed the $200.00 fee for this submission of this petition. No additional fees are required by the Office.

Any questions concerning this decision should be directed to Kery Fries, Senior Legal Advisor, Office of Patent Legal Administration at 571-272-7757.

---

[1]Patent issued on July 6, 2006

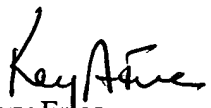

Kery Fries
Senior Legal Advisor
Office of Patent Legal Administration
Office of Deputy Commissioner
for Patent Examination Policy

UNITED STATES PATENT AND TRADEMARK OFFICE

Commissioner for Patents
United States Patent and Trademark Office
P.O. Box 1450
Alexandria, VA 22313-1450
www.uspto.gov

JJGJR.: 09-07

Paper No: __

REENA KUYPER, ESQ.
BYARD NILSSON, ESQ.
9255 SUNSET BOULEVARD
SUITE 810
LOS ANGELES CA 90069

COPY MAILED
SEP 2 4 2007
OFFICE OF PETITIONS

In re Application of :
Katz :
Application No.: 10/322,842 :
Filing Date: 18 December, 2002 :
Attorney Docket No. 6046-102C :

DECISION

This is a decision on the petition, filed on 26 June, 2007, to withdraw the holding of abandonment and considered under 37 C.F.R. §1.181.

The Office regrets the delay in addressing this matter, however, the instant petition was presented to the attorneys in the Office of Petitions only at this writing.[1]

For the reasons set forth below the petition as considered under 37 C.F.R. §1.181 is **GRANTED**.

BACKGROUND

The record reflects that:

[1] **NOTE: Monitoring of the status of applications on PAIR can inform one's management of application responses and provide an indication when mailings of Office actions should be expected. Status Inquiries filed at three (3) or four (4) month intervals provide a demonstration of diligence and attention in supporting a petition seeking relief under 37 C.F.R. §1.181.**

- Petitioner failed to reply timely and properly to the final Office action mailed on 14 November, 2006, with reply due absent an extension of time on or before 14 February, 2007;

- the application went abandoned by operation of law after midnight 14 February, 2007;

- the Office mailed the Notice of Abandonment on 17 May, 2007;

- on 26 June, 2007, Petitioner filed the instant petition, and averred therein, *inter alia*, timely reply (with request and fee for extension of time) in the form of a request for continued examination and fee with a submission under 37 C.F.R. §1.114 in the form of an amendment filed on 17 May, 2007, over a 14 May, 2007, certificate of mailing bearing an e-signature (see: http://cc.msnscache.com/cache.aspx?q=8354794923740&lang=en-US), 2007, and submits copies of date-stamped ("MAY 17 2007") receipt card MPEP §503[2]) for and the averred reply in support of the statement.

---

[2] MPEP §503 provides in pertinent part:

§503 Application Number and Filing Receipt

* * *

A return postcard should be attached to *each* patent application for which a receipt is desired. It is important that the return postcard itemize all of the components of the application. If the postcard does not itemize each of the components of the application, it will not serve as evidence that any component which was not itemized was received by the United States Patent and Trademark Office (USPTO). It should be recognized that the identification of an application by application number does not necessarily signify that the USPTO has accepted the application as complete (37 C.F.R. §1.53(a)).

* * *

RETURN POSTCARD

If a receipt of any item (e.g., paper or fee) filed in the USPTO is desired, it may be obtained by enclosing with the paper a self-addressed postcard specifically identifying the item. The USPTO will stamp the receipt date on the postcard and place it in the outgoing mail. A postcard receipt which itemizes and properly identifies the items which are being filed serves as *prima facie* evidence of receipt in the USPTO of all the items listed thereon on the date stamped thereon by the USPTO.

The identifying data on the postcard should be so complete as to clearly identify the item for which receipt is requested. For example, the postcard should identify the applicant's name, application number (if known), confirmation number (if known), filing date, interference number, title of the invention, etc. The postcard should also identify the type of paper being filed, e.g., new application, affidavit, amendment, notice of appeal, appeal brief, drawings, fees, motions, supplemental oath or declaration, petition, etc., and the number of pages being submitted. If a new application is being filed, all parts of the application being submitted should be separately listed on the postcard, e.g., the number of pages of specification (including written description, claims and abstract), number of claims, number of sheets of drawings, number of pages of oath/declaration, number of pages of cover sheet (provisional application).

The postcard receipt will not serve as *prima facie* evidence of receipt of any item which is not adequately itemized on the postcard. For example, merely listing on the postcard "a complete application" or "patent application" will not serve as a proper receipt for each of the required components of an application (e.g., specification (including claims), drawings (if necessary), oath or declaration and the application filing fee) or missing portions (e.g., pages, sheets of drawings) of an application if one of the components or portion of a component is found to be missing by the USPTO. Each separate component should be specifically and properly itemized on the postcard. Furthermore, merely incorporating by reference in the postcard receipt, the items listed in a transmittal letter will not serve as *prima facie* evidence of receipt of those items.

The person receiving the item(s) in the USPTO will check the listing on the postcard against the item(s) being filed to be sure they are properly identified and that all the items listed on the postcard are presently being submitted to the USPTO. If any of the items listed on the postcard are not being submitted to the USPTO, those items will be crossed off and the post-card initialed by the person receiving the items. Upon return of a postcard receipt from the USPTO, the postcard receipt should be promptly reviewed by the person who filed the items to ensure that every item specifically denoted on the postcard was received by the USPTO. If the postcard receipt has been annotated to indicate that a particular item denoted on the postcard was not received by the USPTO, the postcard receipt will not serve as *prima facie* evidence of receipt of that item in the USPTO. (Emphasis supplied.)

The availability of applications and application papers online to applicants/practitioners who diligently associate their Customer Number with the respective application(s) can inform an applicant/practitioner as to events/transactions in an application.

Out of an abundance of caution, Petitioners always are reminded that the filing of a petition under 37 C.F.R. §1.181 does not toll any periods that may be running any action by the Office and a petition seeking relief under the regulation must be filed within two (2) months of the act complained of (see: 37 C.F.R. §1.181(f)); and those registered to practice *and* all others who make representations before the Office must inquire into the underlying facts of representations made to the Office and support averments with the appropriate documentation–since all owe to the Office the continuing duty to disclose.[3]

---

[3] See supplement of 17 June, 1999. The Patent and Trademark Office is relying on petitioner's duty of candor and good faith and accepting a statement made by Petitioner. See Changes to Patent Practice and Procedure, 62 Fed. Reg. at 53160 and 53178, 1203 Off. Gaz. Pat. Office at 88 and 103 (responses to comments 64 and 109)(applicant obligated under 37 C.F.R. §10.18 to inquire into the underlying facts and circumstances when providing statements to the Patent and Trademark Office).

Specifically, the regulations at 37 C.F.R. §10.18 provide:

§ 10.18 Signature and certificate for correspondence filed in the Patent and Trademark Office.
(a) For all documents filed in the Office in patent, trademark, and other non-patent matters, except for correspondence that is required to be signed by the applicant or party, each piece of correspondence filed by a practitioner in the Patent and Trademark Office must bear a signature by such practitioner complying with the provisions of §1.4(d), §1.4(e), or § 2.193(c)(1) of this chapter.
(b) By presenting to the Office (whether by signing, filing, submitting, or later advocating) any paper, the party presenting such paper, whether a practitioner or non-practitioner, is certifying that—

(1) All statements made therein of the party's own knowledge are true, all statements made therein on information and belief are believed to be true, and all statements made therein are made with the knowledge that whoever, in any matter within the jurisdiction of the Patent and Trademark Office, knowingly and willfully falsifies, conceals, or covers up by any trick, scheme, or device a material fact, or makes any false, fictitious or fraudulent statements or representations, or makes or uses any false writing or document knowing the same to contain any false, fictitious or fraudulent statement or entry, shall be subject to the penalties set forth under 18 U.S.C. 1001, and that violations of this paragraph may jeopardize the validity of the application or document, or the validity or enforceability of any patent, trademark registration, or certificate resulting therefrom; and

(2) To the best of the party's knowledge, information and belief, formed after an inquiry reasonable under the circumstances, that —

(i) The paper is not being presented for any improper purpose, such as to harass someone or to cause unnecessary delay or needless increase in the cost of prosecution before the Office;

(ii) The claims and other legal contentions therein are warranted by existing law or by a nonfrivolous argument for the extension, modification, or reversal of existing law or the establishment of new law;

(iii) The allegations and other factual contentions have evidentiary support or, if specifically so identified, are likely to have evidentiary support after a reasonable opportunity for further investigation or discovery; and

(iv) The denials of factual contentions are warranted on the evidence, or if specifically so identified, are reasonably based on a lack of information or belief.

(c) Violations of paragraph (b)(1) of this section by a practitioner or non-practitioner may jeopardize the validity of the application or document, or the validity or enforceability of any patent, trademark registration, or certificate resulting therefrom. Violations of any of paragraphs (b)(2)(i) through (iv) of this section are, after notice and reasonable opportunity to respond, subject to such sanctions as deemed appropriate by the Commissioner, or the Commissioner's designee, which may include, but are not limited to, any combination of —

(1) Holding certain facts to have been established;
(2) Returning papers;
(3) Precluding a party from filing a paper, or presenting or contesting an issue;
(4) Imposing a monetary sanction;
(5) Requiring a terminal disclaimer for the period of the delay; or
(6) Terminating the proceedings in the Patent and Trademark Office.

(d) Any practitioner violating the provisions of this section may also be subject to disciplinary action. See § 10.23(c)(15).
[Added 50 FR 5175, Feb. 6, 1985, effective Mar. 8, 1985; para. (a) revised, 58 FR 54494, Oct. 22, 1993, effective Nov. 22, 1993; paras. (a) & (b) revised, paras. (c) & (d) added, 62 FR 53131, Oct. 10, 1997, effective Dec. 1, 1997; para. (a) revised, 69 FR 56481, Sept. 21, 2004, effective

STATUTES, REGULATIONS AND ANALYSIS

Congress has authorized the Commissioner to "revive an application if the delay is shown to the satisfaction of the Commissioner to have been "unavoidable." 35 U.S.C. §133 (1994).[4]

The regulations at 37 C.F.R. §1.137(a) and (b) set forth the requirements for a petitioner to revive a previously unavoidably or unintentionally, respectively, abandoned application under this congressional grant of authority. The language of 35 U.S.C. §133 and 37 C.F.R. §1.137(a) is clear, unambiguous, and without qualification: the delay in tendering the reply to the outstanding Office action, as well as filing the first petition seeking revival, must have been unavoidable for the reply now to be accepted on petition.[5]

Delays in responding properly raise the question whether delays are unavoidable.[6] Where there is a question whether the delay was unavoidable, Petitioners must meet the burden of establishing that the delay was unavoidable within the meaning of 35 U.S.C. §133 and 37 C.F.R. §1.137(a).[7]

And the Petitioner must be diligent in attending to the matter.[8] Failure to do so does not constitute the care required under Pratt, and so cannot satisfy the test for diligence and due care.

(By contrast, unintentional delays are those that do not satisfy the very strict statutory and regulatory requirements of unavoidable delay, and also, by definition, are not intentional.[9]))

Oct. 21, 2004]

[4] 35 U.S.C. §133 provides:
35 U.S.C. §133 Time for prosecuting application.
Upon failure of the applicant to prosecute the application within six months after any action therein, of which notice has been given or mailed to the applicant, or within such shorter time, not less than thirty days, as fixed by the Commissioner in such action, the application shall be regarded as abandoned by the parties thereto, unless it be shown to the satisfaction of the Commissioner that such delay was unavoidable.

[5] Therefore, by example, an unavoidable delay in the payment of the Filing Fee might occur if a reply is shipped by the US Postal Service, but due to catastrophic accident, the delivery is not made.

[6] See: *Changes to Patent Practice and Procedure*; *Final Rule Notice*, 62 *Fed. Reg.* at 53158-59 (October 10, 1997), 1203 *Off. Gaz. Pat. Office* at 86-87 (October 21, 1997).

[7] See: In re Application of G, 11 USPQ2d 1378, 1380 (Comm'r Pats. 1989).

[8] See: Diligence in Filing Petitions to Revive and Petitions to Withdraw the Holding of Abandonment, 1124 Off. Gaz. Pat. Office 33 (March 19, 1991). It was and is Petitioner's burden to exercise diligence in seeking either to have the holding of abandonment withdrawn or the application revived. See 1124 Off. Gaz. Pat. Office supra.

[9] Therefore, by example, an unintentional delay in the reply might occur if the reply and transmittal form are to be prepared for shipment by the US Postal Service, but other pressing matters distract one's attention and the mail is not timely deposited for shipment.

Allegations as to the Request to
Withdraw the Holding of Abandonment

The courts have determined the construct for properly supporting a petition seeking withdrawal of a holding of abandonment.[10]

The commentary at MPEP §711.03(c) provides:

* * *

B. Petition To Withdraw Holding of Abandonment Based on Evidence That a Reply Was Timely Mailed or Filed

37 C.F.R. §1.10(c) through §1.10(e) and §1.10(g) set forth procedures for petitioning the Director of the USPTO to accord a filing date to correspondence as of the date of deposit of the correspondence as "Express Mail." A petition to withdraw the holding of abandonment relying upon a timely reply placed in "Express Mail" must include an appropriate petition under 37 C.F.R. §1.10(c), (d), * (e), or (g) (see MPEP § 513). When a paper is shown to have been mailed to the Office using the "Express Mail" procedures, the paper must be entered in PALM with the "Express Mail" date.

Similarly, applicants may establish that a reply was filed with a postcard receipt that properly identifies the reply and provides *prima facie* evidence that the reply was timely filed. See MPEP § 503. For example, if the application has been held abandoned for failure to file a reply to a first Office action, and applicant has a postcard receipt showing that an amendment was timely filed in response to the Office action, then the holding of abandonment should be withdrawn upon the filing of a petition to withdraw the holding of abandonment. When the reply is shown to have been timely filed based on a postcard receipt, the reply must be entered into PALM using the date of receipt of the reply as shown on the post card receipt.

Where a certificate of mailing under 37 C.F.R. §1.8, but not a postcard receipt, is relied upon in a petition to withdraw the holding of abandonment, see 37 C.F.R. §1.8(b) and MPEP § 512.

---

[10] See: Delgar v. Schulyer, 172 USPQ 513 (D.D.C. 1971).

> As stated in 37 C.F.R §1.8(b)(3) the statement that attests to the previous timely mailing or transmission of the correspondence must be on a personal knowledge basis, or to the satisfaction of the Director of the USPTO. If the statement attesting to the previous timely mailing is not made by the person who signed the Certificate of Mailing (i.e., there is no personal knowledge basis), then the statement attesting to the previous timely mailing should include evidence that supports the conclusion that the correspondence was actually mailed (e.g., copies of a mailing log establishing that correspondence was mailed for that application). When the correspondence is shown to have been timely filed based on a certificate of mailing, the correspondence is entered into PALM with the actual date of receipt (i.e., the date that the duplicate copy of the papers was filed with the statement under 37 C.F.R. §1.8).
>
> 37 C.F.R. §1.8(b) also permits applicant to notify the Office of a previous mailing or transmission of correspondence and submit a statement under 37 C.F.R. 1.8(b)(3) accompanied by a duplicate copy of the correspondence when a reasonable amount of time (e.g., more than one month) has elapsed from the time of mailing or transmitting of the correspondence. Applicant does not have to wait until the application becomes abandoned before notifying the Office of the previous mailing or transmission of the correspondence. Applicant should check the private Patent Application Information Retrieval (PAIR) system for the status of the correspondence before notifying the Office. See MPEP § 512.
>
> * * *

Moreover, the regulation places upon Petitioner a diligence requirement to seek relief within two (2) months of the act complained of.

It appears Petitioner has satisfied the showings required herein.

CONCLUSION

The petition as considered under 37 C.F.R. §1.181 is **granted**, and the 17 May, 2007, Notice of Abandonment is **vacated**.

The instant application is released to Technology Center 2600 for further processing in due course.

While telephone inquiries regarding this decision may be directed to the undersigned at (571) 272-3214, it is noted that all practice before the Office is in writing (see: 37 C.F.R. §1.2[11]) and the proper authority for action on any matter in this regard are the statutes (35 U.S.C.), regulations (37 C.F.R.) and the commentary on policy (MPEP). Therefore, no telephone discussion may be controlling or considered authority for Petitioner's action(s).

John J. Gillon, Jr.
Senior Attorney
Office of Petitions

[11] The regulations at 37 C.F.R. §1.2 provide:

§1.2 Business to be transacted in writing.

All business with the Patent and Trademark Office should be transacted in writing.The personal attendance of applicants or their attorneys or agents at the Patent and Trademark Office is unnecessary. The action of the Patent and Trademark Office will be based exclusively on the written record in the Office. No attention will be paid to any alleged oral promise, stipulation,or understanding in relation to which there is disagreement or doubt.

UNITED STATES PATENT AND TRADEMARK OFFICE

UNITED STATES DEPARTMENT OF COMMERCE
United States Patent and Trademark Office
Address: COMMISSIONER FOR PATENTS
P.O. Box 1450
Alexandria, Virginia 22313-1450
www.uspto.gov

REENA KUYPER, ESQ.
BYARD NILSSON, ESQ.
9229 SUNSET BOULEVARD
SUITE 630
LOS ANGELES, CA 90069

Mail Date: 04/21/2010

Applicant	: Ronald A. Katz	: DECISION ON REQUEST FOR
Patent Number	: 7616748	: RECALCULATION of PATENT
Issue Date	: 11/10/2009	: TERM ADJUSTMENT IN VIEW
Appliction No	: 10/322,842	: OF WYETH AND NOTICE OF INTENT TO
Filed	: 12/18/2002	: ISSUE CERTIFICATE OF CORRECTION
		:

The Request for Recalculation is **GRANTED** to the extent indicated.

The patent term adjustment has been determined to be **0** days. The USPTO will *sua sponte* issue a certificate of correction reflecting the amount of PTA days determined by the recalculation.

Prior to the issuance of the certificate of correction, the USPTO will afford patentee an opportunity to be heard and request reconsideration. Accordingly, patentee has **one month or thirty (30) days**, whichever is longer, to file a request for reconsideration of this patent term adjustment calculation. See 35 U.S.C. 154(b)(3)(B)(ii) and 37 CFR 1.322(a)(4). No extensions of time will be granted under 37 CFR 1.136.

Patentee should use document code PET.OP if electronically filing a request for reconsideration of this patent term adjustment calculation. The patentee must also include the information required by 37 CFR 1.705(b)(2) and the fee required by 37 CFR 1.18(e). If patentee does not file a timely request for reconsideration of this patent term adjustment calculation including the information required by 37 CFR 1.705(b)(2) and the fee required by 37 CFR 1.18(e), the USPTO will issue a certificate of correction reflecting the PTA determination noted above.

Patentee should be aware that in order to preserve the right to review in the United States District Court for the District of Columbia of the USPTO patent term adjustment determination, patentee must ensure that he or she also take the steps required under 35 U.S.C. 154(b)(4)(A) in a timely manner. Nothing in the request for recalculation should be construed as providing an alternative time frame for commencing a civil action under 35 U.S.C. 154(b)(4)(A).

Any questions concerning this decision should be directed to the Office of Patent Legal Administration at 571-272-7702.

UNITED STATES PATENT AND TRADEMARK OFFICE

Commissioner for Patents
United States Patent and Trademark Office
P.O. Box 1450
Alexandria, VA 22313-1450
www.uspto.gov

In re Patent No. 6802540
Issue Date: October 12,2004
Application No. 10322869
Filed: December 18,2002
Attorney Docket No. 124590

:
:DECISION GRANTING PETITION
:UNDER 37 CFR 1.378(c)
:

This is a decision on the electronic petition, filed November 5,2008 ,under 37 CFR 1.378(c) to accept the unintentionally delayed payment of the 3.5 year maintenance fee for the above-identified patent.

The petition is **GRANTED**.

The maintenance fee is accepted, and the above-identified patent reinstated as of November 5,2008 . This decision also constitutes notice that the fee has been accepted. An electronic copy of the petition and this decision has been created as an entry in the Image File Wrapper. Nevertheless, petitioner should print and retain an independent copy.

Telephone inquiries related to this electronic decision should be directed to the Electronic Business Center at 1-866-217-9197.

PETITION TO ACCEPT UNINTENTIONALLY DELAYED PAYMENT OF MAINTENANCE FEE IN AN EXPIRED PATENT (37 CFR 1.378(c))

Patent Number	Issue Date (YYYY-MM-DD)	Application Number	Filing Date (YYYY-MM-DD)	Docket Number (if applicable)
6,802,540	2004-10-12	10/322,869	2002-12-18	124590

CAUTION: Maintenance fee (and surcharge, if any) payment must correctly identify: (1) the patent number and (2) the application number of the actual U.S. application leading to issuance of that patent to ensure the fee(s) is/are associated with the correct patent. 37 CFR 1.366(c) and (d).

SMALL ENTITY

☐ Patentee claims, or has previously claimed, small entity status. See 37 CFR 1.27.

LOSS OF ENTITLEMENT TO SMALL ENTITY STATUS

☐ Patentee is no longer entitled to small entity status. See 37 CFR 1.27(g)

NOT Small Entity			Small Entity		
	Fee	Code		Fee	Code
◉	3 ½ year	(1551)	○	3 ½ year	(2551)
○	7 ½ year	(1552)	○	7 ½ year	(2552)
○	11 ½ year	(1553)	○	11 ½ year	(2553)

SURCHARGE

The surcharge required by 37 CFR 1.20(i)(2) (Fee Code 1558) must be paid as a condition of accepting unintentionally delayed payment of the maintenance fee.

MAINTENANCE FEE (37 CFR 1.20(e)-(g))

The appropriate maintenance fee must be submitted with this petition.

STATEMENT

THE UNDERSIGNED CERTIFIES THAT THE DELAY IN PAYMENT OF THE MAINTENANCE FEE TO THIS PATENT WAS UNINTENTIONAL

PETITIONER(S) REQUEST THAT THE DELAYED PAYMENT OF THE MAINTENANCE FEE BE ACCEPTED AND THE PATENT REINSTATED

THIS PORTION MUST BE COMPLETED BY THE SIGNATORY OR SIGNATORIES

37 CFR 1.378(d) states: "Any petition under this section must be signed by an attorney or agent registered to practice before the Patent and Trademark Office, or by the patentee, the assignee, or other party in interest."

I certify, in accordance with 37 CFR 1.4(d)(4) that I am

◉ An attorney or agent registered to practice before the Patent and Trademark Office

○ A sole patentee

○ A joint patentee; I certify that I am authorized to sign this submission on behalf of all the other patentees.

○ A joint patentee; all of whom are signing this e-petition

○ The assignee of record of the entire interest

Patent Practitioner			
A signature of the applicant or representative is required in accordance with 37 CFR 1.33 and 10.18. Please see 37 CFR 1.4(d) for the form of the signature			
Signature	/mm52020/	Date (YYYY-MM-DD)	2008-11-05
Name	Mardson McQuay	Registration Number	52020

This collection of information is required by 37 CFR 1.378(c). The information is required to obtain or retain a benefit by the public which is to file (and by the USPTO to process) an application. Confidentiality is governed by 35 U.S.C. 122 and 37 CFR 1.11 and 1.14. This collection is estimated to take 1 hour to complete, including gathering, preparing, and submitting the completed application form to the USPTO. Time will vary depending upon the individual case. Any comments on the amount of time you require to complete this form and/ or suggestions for reducing this burden, should be sent to the Chief Information Officer, U.S. Patent and Trademark Office, U.S. Department of Commerce, P.O. Box 1450, Alexandria, VA 22313-1450. DO NOT SEND FEES OR COMPLETED FORMS TO THIS ADDRESS. **This form can only be used when in conjunction with EFS-Web. If this form is mailed to the USPTO, it may cause delays in reinstating the patent.**

Privacy Act Statement

The Privacy Act of 1974 (P.L. 93-579) requires that you be given certain information in connection with your submission of the attached form related to a patent application or patent. Accordingly, pursuant to the requirements of the Act, please be advised that: (1) the general authority for the collection of this information is 35 U.S.C. 2(b)(2); (2) furnishing of the information solicited is voluntary; and (3) the principal purpose for which the information is used by the U.S. Patent and Trademark Office is to process and/or examine your submission related to a patent application or patent. If you do not furnish the requested information, the U.S. Patent and Trademark Office may not be able to process and/or examine your submission, which may result in termination of proceedings or abandonment of the application or expiration of the patent.

The information provided by you in this form will be subject to the following routine uses:

1. The information on this form will be treated confidentially to the extent allowed under the Freedom of Information Act (5 U.S.C. 552) and the Privacy Act (5 U.S.C. 552a). Records from this system of records may be disclosed to the Department of Justice to determine whether the Freedom of Information Act requires disclosure of these record s.

2. A record from this system of records may be disclosed, as a routine use, in the course of presenting evidence to a court, magistrate, or administrative tribunal, including disclosures to opposing counsel in the course of settlement negotiations.

3. A record in this system of records may be disclosed, as a routine use, to a Member of Congress submitting a request involving an individual, to whom the record pertains, when the individual has requested assistance from the Member with respect to the subject matter of the record.

4. A record in this system of records may be disclosed, as a routine use, to a contractor of the Agency having need for the information in order to perform a contract. Recipients of information shall be required to comply with the requirements of the Privacy Act of 1974, as amended, pursuant to 5 U.S.C. 552a(m).

5. A record related to an International Application filed under the Patent Cooperation Treaty in this system of records may be disclosed, as a routine use, to the International Bureau of the World Intellectual Property Organization, pursuant to the Patent Cooperation Treaty.

6. A record in this system of records may be disclosed, as a routine use, to another federal agency for purposes of National Security review (35 U.S.C. 181) and for review pursuant to the Atomic Energy Act (42 U.S.C. 218(c)).

7. A record from this system of records may be disclosed, as a routine use, to the Administrator, General Services, or his/her designee, during an inspection of records conducted by GSA as part of that agency's responsibility to recommend improvements in records management practices and programs, under authority of 44 U.S.C. 2904 and 2906. Such disclosure shall be made in accordance with the GSA regulations governing inspection of records for this purpose, and any other relevant (i.e., GSA or Commerce) directive. Such disclosure shall not be used to make determinations about individuals.

8. A record from this system of records may be disclosed, as a routine use, to the public after either publication of the application pursuant to 35 U.S.C. 122(b) or issuance of a patent pursuant to 35 U.S.C. 151. Further, a record may be disclosed, subject to the limitations of 37 CFR 1.14, as a routine use, to the public if the record was filed in an application which became abandoned or in which the proceedings were terminated and which application is referenced by either a published application, an application open to public inspections or an issued patent.

9. A record from this system of records may be disclosed, as a routine use, to a Federal, State, or local law enforcement agency, if the USPTO becomes aware of a violation or potential violation of law or regulation.

UNITED STATES PATENT AND TRADEMARK OFFICE

Commissioner for Patents
United States Patent and Trademark Office
P.O. Box 1450
Alexandria, VA 22313-1450
www.uspto.gov

TEXAS INSTRUMENTS INCORPORATED
P.O BOX 655474, M/S 3999
DALLAS, TX 75265

COPY MAILED
NOV 2 8 2008

In re Application of :
Seok-Jun Lee, et. al. :
Application No. 10/322,876 : DECISION ON PETITION
Filed: December 18, 2002 :
Attorney Docket No. TI-35088 :

This is a decision on the petition under the unintentional provisions of 37 CFR 1.137(b), filed October 3, 2008 and supplemented on October 4, 2008, to revive the above-identified application.

The petition is **DISMISSED**.

Any request for reconsideration of this decision must be submitted within **TWO (2) MONTHS** from the mail date of this decision. Extensions of time under 37 CFR 1.136(a) are permitted. The reconsideration request should include a cover letter entitled "Renewed Petition under 37 CFR 1.137(b)." This is **not** a final agency action within the meaning of 5 U.S.C. § 704.

The application became abandoned for failure to timely respond to the Notice of Allowance/Notice of Allowability (Notices) mailed April 24, 2006.

A grantable petition under 37 CFR 1.137(b) must be accompanied by: (1) the required reply, unless previously filed; (2) the petition fee as set forth in 37 CFR 1.17(m); (3) a statement that the entire delay in filing the required reply from the due date for the reply until the filing of a grantable petition pursuant to 37 CFR 1.137(b) was unintentional; and (4) any terminal disclaimer (and fee as set forth in 37 CFR 1.20(d)) required by 37 CFR 1.137(d). Where there is a question as to whether either the abandonment or the delay in filing a petition under 37 CFR 1.137 was unintentional, the Director may require additional

information. *See* MPEP 711.03(c)(II)(C) and (D). The instant petition lacks item (3).

There are three periods to be considered during the evaluation of a petition under 37 CFR 1.137(b):

(1) the delay in reply that originally resulted in the abandonment;

(2) the delay in filing an initial petition pursuant to 37 CFR 1.137(b) to revive the application; and

(3) the delay in filing a grantable petition pursuant to 37 CFR 1.137(b) to revive the application.

Currently, the delay has not been shown to the satisfaction of the Director to be unintentional for periods (1) and (2).

As to Period (1):

The patent statute at 35 U.S.C. § 41(a)(7) authorizes the Director to revive an "unintentionally abandoned application." The legislative history of Public Law 97-247 reveals that the purpose of 35 U.S.C. § 41(a)(7) is to permit the Office to have more discretion than in 35 U.S.C. §§ 133 or 151 to revive abandoned applications in appropriate circumstances, but places a limit on this discretion, stating that "[u]nder this section a petition accompanied by either a fee of $500 or a fee of $50 **would not be granted where the abandonment** or the failure to pay the fee for issuing the patent **was intentional** as opposed to being unintentional or unavoidable." [emphasis added]. See H.R. Rep. No. 542, 97th Cong., 2d Sess. 6-7 (1982), *reprinted in* 1982 U.S.C.C.A.N. 770-71. The revival of an intentionally abandoned application is antithetical to the meaning and intent of the statute and regulation.

35 U.S.C. § 41(a)(7) authorizes the Director to accept a petition "for the revival of an unintentionally abandoned application for a patent." As amended December 1, 1997, 37 CFR 1.137(b)(3) provides that a petition under 37 CFR 1.137(b) must be accompanied by a statement that the delay was unintentional, but provides that "[t]he Commissioner may require additional information where there is a question whether the delay was unintentional." Where, as here, there is a question whether the initial delay was unintentional, the petitioner must meet the

burden of establishing that the delay was unintentional within the meaning of 35 U.S.C. § 41(a)(7) and 37 CFR 1.137(b). *See* In re Application of G, 11 USPQ2d 1378, 1380 (Comm'r Pats. 1989); 37 CFR 1.137(b). Here, in view of the inordinate delay (over 2 years) in resuming prosecution, there is a question whether the entire delay was unintentional. Petitioner should note that the issue is not whether some of the delay was unintentional by any party; rather, the issue is whether the entire delay has been shown to the satisfaction of the Director to be unintentional.

The question under 37 CFR 1.137(b) for period (1) is whether the delay on the part of the party having the right or authority to reply to avoid abandonment (or not reply) was unintentional. Accordingly, any renewed petition must clearly identify the party having the right to reply to avoid abandonment on January 26, 2006. That party, in turn must explain what effort(s) was made to further reply to the outstanding Notices and, further, why no reply was filed. If no effort was made to further reply, then that party must explain why the delay in this application does not result from a deliberate course of action (or inaction). As Practitioners associated with Customer Number No. 23494 was counsels of record at the time of abandonment, they should explain why this application became abandoned while it was under their control and what efforts was made to reply and with whom this matter was discussed outside of their Office. Copies of any correspondence relating to the filing, or to not filing a further reply to the outstanding Notices are required from the responsible persons and whoever else was involved with this application at the time of abandonment. Statements are required from any and all persons associated with Customer Number 23494, and the responsible person(s) having firsthand knowledge of the circumstances surrounding the lack of a reply to the outstanding Notices. As the courts have made clear, it is pointless for the USPTO to revive a long abandoned application without an adequate showing that the delay did not result from a deliberate course of action. *See* Lawman Armor v. Simon, 2005 U.S. Dist. LEXIS 10843, 74 USPQ2d 1633 (DC EMich 2005); Field Hybrids, LLC v. Toyota Motor Corp., 2005 U.S. Dist. LEXIS 1159 (D. Minn Jan. 27, 2005); Lumenyte Int'l Corp. v. Cable Lite Corp., Nos. 96-1011, 96-1077, 1996 U.S. App. LEXIS 16400, 1996 WL 383927 (Fed. Cir. July 9, 1996) (unpublished) (patents held unenforceable due to a finding of inequitable conduct in submitting an inappropriate statement that the abandonment was unintentional).

As to Period (2):

Likewise, where the applicant deliberately chooses not to seek or persist in seeking the revival of an abandoned application, or where the applicant deliberately chooses to delay seeking the revival of an abandoned application, the resulting delay in seeking revival of the abandoned application cannot be considered as "unintentional" within the meaning of 37 CFR 1.137(b). *See* MPEP 711.03(c).

The language of both 35 U.S.C. § 41(a)(7) and 37 CFR 1.137(b) are clear and unambiguous, and, furthermore, without qualification. That is, the delay in filing the reply during prosecution, as well as in filing the petition seeking revival, must have been, without qualification, "unintentional" for the reply to now be accepted on petition. The Office requires that the entire delay be at least unintentional as a prerequisite to revival of an abandoned application to prevent abuse and injury to the public. *See* H.R. Rep. No. 542, 97th Cong., 2d Sess. 7 (1982), reprinted in 1982 U.S.C.C.A.N. 771 ("[i]n order to prevent abuse and injury to the public the Commissioner . . . could require applicants to act promptly after becoming aware of the abandonment"). The December 1997 change to 37 CFR 1.137 did not create any new right to overcome an intentional delay in seeking revival, or in renewing an attempt at seeking revival, of an abandoned application. *See* Changes to Patent Practice and Procedure; Final Rule Notice, 62 Fed. Reg. 53131, 53160 (October 10, 1997), 1203 Off. Gaz. Pat. Office 63, 87 (October 21, 1997), which clearly stated that any protracted delay (here, over 2 years) could trigger, as here, a request for additional information. As the courts have since made clear, a protracted delay in seeking revival, as here, requires a petitioner's detailed explanation seeking to excuse the delay as opposed to USPTO acceptance of a general allegation of unintentional delay. *See* Lawman Armor v. Simon, 2005 U.S. Dist. LEXIS 10843, 74 USPQ2d 1633, at 1637-8 (DC EMich 2005); Field Hybrids, LLC v. Toyota Motor Corp., 2005 U.S. Dist. LEXIS 1159 (D. Minn Jan. 27, 2005) at *21-*23. Statements are required from any and all persons and the responsible person(s) having firsthand knowledge of the circumstances surrounding the protracted delay, after the abandonment date, in seeking revival.

As noted in MPEP 711.03(c)(II), subsection D, in instances in which such petition was not filed within 1 year of the date of abandonment of the application, applicants should include:

(A) the date that the applicant first became aware of the abandonment of the application; and

(B) a showing as to how the delay in discovering the abandoned status of the application occurred despite the exercise of due care or diligence on the part of the applicant.

In either instance, applicant's failure to carry the burden of proof to establish that the "entire" delay was "unavoidable" or "unintentional" may lead to the denial of a petition under 37 CFR 1.137(b), regardless of the circumstances that originally resulted in the abandonment of the application. *See also* New York University v. Autodesk, 2007 U.S. DIST LEXIS, U.S.District LEXIS 50832, *10 -*12 (S.D.N.Y. 2007)(protracted delay in seeking revival undercuts assertion of unintentional delay).

Any renewed petition may be addressed as follows:

By mail: Mail Stop PETITION
Commissioner for Patents
P.O. Box 1450
Alexandria, VA 22313-1450

By hand: U.S. Patent and Trademark Office
Customer Service Window, Mail Stop Petitions
Randolph Building
401 Dulany Street
Alexandria, VA 22314

The centralized facsimile number is **(571) 273-8300.**

Correspondence regarding this decision may also be filed through the electronic filing system of the USPTO.

Telephone inquiries concerning this decision should be directed to the undersigned at (571) 272-3226.

Andrea Smith
Petitions Examiner
Office of Petitions

UNITED STATES PATENT AND TRADEMARK OFFICE

COMMISSIONER FOR PATENTS
UNITED STATES PATENT AND TRADEMARK OFFICE
P.O. BOX 1450
ALEXANDRIA, VA 22313-1450
www.uspto.gov

PAUL A. WELTER
P.O. BOX 2903
MINNEAPOLIS, MN 55402-0903

COPY MAILED
JUN 0 8 2006
OFFICE OF PETITIONS

In re Application of
Smith et al. :
Application No. 10/322,877 :
Filed: December 18, 2002 : NOTICE
Patent No. 6,866,009 :
Issued: March 15, 2005 :
Title of Invention: :
COLLAPSIBLE ANIMAL CONTAINER :

This is a notice regarding your request to change your entity status to large.

In accordance with 37 CFR 1.28, said notice is hereby accepted. Office records have been corrected to indicate loss of small entity status in the above-identified application.

The address on the petition is different from the address of record. If Petitioner desires to receive further correspondence with respect to this application, a change of correspondence address must be filed. A courtesy copy of this Decision is being forwarded to Petitioner at the address appearing on the petition; however, all future correspondence will be sent to address of record until instructions to the contrary are received.

Patentee is advised that, in patented files: requests for changes of correspondence address, powers of attorney, revocations of powers of attorney, withdrawal of attorney and submissions under 37 CFR 1.501. Designation of, or changes to, a fee address should be addressed to Mail Stop M Correspondence, Director of the U.S. Patent and Trademark Office, P.O. Box 1450, Alexandria, VA 22313-1450.

Telephone inquiries concerning this matter should be directed to the undersigned at (571) 272-3232.

Derek L. Woods
Attorney
Office of Petitions

Cc: MERCHANT & GOULD
PO BOX 2903
MINNEAPOLIS, MN 55402-0903

UNITED STATES PATENT AND TRADEMARK OFFICE

Commissioner for Patents
United States Patent and Trademark Office
P.O. Box 1450
Alexandria, VA 22313-1450
www.uspto.gov

ROBERT DEBERARDINE
ABBOTT LABORATORIES
100 ABBOTT PARK ROAD
DEPT. 377/AP6A
ABBOTT PARK IL 60064-6008

COPY MAILED

JUN 27 2007

OFFICE OF PETITIONS

In re Application of
TANEJA, et al.
Application No. 10/322,917
Filed: December 18, 2002
Attorney Docket No. **6864.US.02**

DECISION ON PETITION

This is a decision on the petition under 37 CFR 1.137(b), filed December 11, 2007, to revive the above-identified application.

The petition is **GRANTED**.

The application became abandoned for failure to reply in a timely manner to the non-final Office action mailed, November 9, 2004, which set a shortened statutory period for reply of three (3) months. No extensions of time under the provisions of 37 CFR 1.136(a) were obtained. Accordingly, the application became abandoned on February 10, 2005.

The petition satisfies the requirements of 37 CFR 1.137(b) in that petitioner has supplied (1) the reply in the form of an amendment; (2) the petition fee of $1500; and (3) an adequate statement of unintentional delay.

It is not apparent whether the person signing the statement of unintentional delay was in a position to have firsthand or direct knowledge of the facts and circumstances of the delay at issue. Nevertheless, such statement is being treated as having been made as the result of a reasonable inquiry into the facts and circumstances of such delay. See 37 CFR 10.18(b) and Changes to Patent Practice and Procedure: Final Rule Notice, 62 Fed. Reg. 53131,53178 (October 10, 1997), 1203 Off. Gaz. Pat. Office 63, 103 (October 21, 1997). In the event that such an inquiry has not been made, petitioner must make such an inquiry. If such inquiry results in the discovery that it is not correct that the entire delay in filing the required reply from the due date for the reply until the filing of a grantable petition pursuant to 37 CFR 1.137(b) was unintentional, petitioner must notify the Office.

There is no indication that the person signing the petition was ever given a power of attorney to prosecute the application. If the person signing the petition desires to receive future correspondence regarding this application, the appropriate power of attorney document must be submitted. While a courtesy copy of this decision is being mailed to the person signing the petition,

all future correspondence will be directed to the address currently of record until appropriate instructions are received.

Telephone inquiries related to this decision should be directed to Monica A. Graves at (571) 272-7253.

The application file is being referred to Technology Center Art Unit 3711 for consideration of the concurrently filed amendment.

Sherry D. Brinkley
Petitions Examiner
Office of Petitions

cc: **JOSEPH H. HERRON**
WOOD PHILLIPS KATZ CLARK & MORTIMER
500 W. MADISON STREET, SUITE 3800
CHICAGO, IL 60661-4592

UNITED STATES PATENT AND TRADEMARK OFFICE

COMMISSIONER FOR PATENTS
UNITED STATES PATENT AND TRADEMARK OFFICE
WASHINGTON, D.C. 20231
www.uspto.gov

Paper No. 4

Joseph T. Guy, Ph.D.
Nexsen Pruet Jacobs & Pollard, LLC
PO Drawer 10648
Greenville SC 29603-0648

COPY MAILED

MAR 1 4 2003

OFFICE OF PETITIONS

In re Application of :
Leaphart and Leaphart :
Application No. 10/322,920 : DECISION GRANTING PETITION
Filed: August 22, 2002 :
Attorney Docket No. 25454-1 :

This is a decision on the petition filed March 5, 2003, under 37 CFR 1.10(c) requesting that the above-cited application be accorded a filing date of August 22, 2002, rather than the presently accorded filing date of December 18, 2002.

Petitioner alleges that the application was deposited with the Express Mail Service on August 22, 2002. In support of the allegation, the petition is accompanied by a copy of Express Mail label No. EV153114577US (the same Express Mail label number was placed on the original application papers located in the official file) showing a "date-in" of August 22, 2002.

In view of the above, the petition is granted.

The application file is being returned to the Office of Initial Patent Examination for further processing with a filing date of August 22, 2002.

Any inquiries related to this decision should be directed to the undersigned at (703) 305-0010

Kenya A. McLaughlin
Petitions Attorney
Office of Petitions

UNITED STATES PATENT AND TRADEMARK OFFICE

UNITED STATES DEPARTMENT OF COMMERCE
United States Patent and Trademark Office
Address: COMMISSIONER FOR PATENTS
P.O. Box 1450
Alexandria, Virginia 22313-1450
www.uspto.gov

FITCH EVEN TABIN & FLANNERY
120 SOUTH LASALLE STREET
SUITE 1600
CHICAGO, IL 60603-3406

Mail Date: 04/21/2010

Applicant	: Ahmad Akashe	: DECISION ON REQUEST FOR
Patent Number	: 7572476	: RECALCULATION of PATENT
Issue Date	: 08/11/2009	: TERM ADJUSTMENT IN VIEW
Appliction No	: 10/322,940	: OF WYETH AND NOTICE OF INTENT TO
Filed	: 12/18/2002	: ISSUE CERTIFICATE OF CORRECTION
		:

The Request for Recalculation is **GRANTED** to the extent indicated.

The patent term adjustment has been determined to be **964** days. The USPTO will *sua sponte* issue a certificate of correction reflecting the amount of PTA days determined by the recalculation.

Prior to the issuance of the certificate of correction, the USPTO will afford patentee an opportunity to be heard and request reconsideration. Accordingly, patentee has **one month or thirty (30) days**, whichever is longer, to file a request for reconsideration of this patent term adjustment calculation. See 35 U.S.C. 154(b)(3)(B)(ii) and 37 CFR 1.322(a)(4). No extensions of time will be granted under 37 CFR 1.136.

Patentee should use document code PET.OP if electronically filing a request for reconsideration of this patent term adjustment calculation. The patentee must also include the information required by 37 CFR 1.705(b)(2) and the fee required by 37 CFR 1.18(e). If patentee does not file a timely request for reconsideration of this patent term adjustment calculation including the information required by 37 CFR 1.705(b)(2) and the fee required by 37 CFR 1.18(e), the USPTO will issue a certificate of correction reflecting the PTA determination noted above.

Patentee should be aware that in order to preserve the right to review in the United States District Court for the District of Columbia of the USPTO patent term adjustment determination, patentee must ensure that he or she also take the steps required under 35 U.S.C. 154(b)(4)(A) in a timely manner. Nothing in the request for recalculation should be construed as providing an alternative time frame for commencing a civil action under 35 U.S.C. 154(b)(4)(A).

Any questions concerning this decision should be directed to the Office of Patent Legal Administration at 571-272-7702.

UNITED STATES PATENT AND TRADEMARK OFFICE

Commissioner for Patents
United States Patent and Trademark Office
P.O. Box 1450
Alexandria, VA 22313-1450
www.uspto.gov

BLAKELY SOKOLOFF TAYLOR & ZAFMAN
12400 WILSHIRE BOULEVARD
SEVENTH FLOOR
LOS ANGELES CA 90025-1030

COPY MAILED

FEB 20 2007

OFFICE OF PETITIONS

In re Application of :
Seung-Hwan Lee et al :
Application No. 10/322,945 : ON PETITION
Filed: December 18, 2002 :
Attorney Docket No. 51876P321 :

This is a decision on the petition, filed February 15, 2007, under 37 CFR 1.313(c)(2) to withdraw the above-identified application from issue after payment of the issue fee.

The petition is **GRANTED**.

The above-identified application is withdrawn from issue for consideration of a submission under 37 CFR 1.114 (request for continued examination). See 37 CFR 1.313(c)(2).

Petitioner is advised that the issue fee paid on January 22, 2007 in the above-identified application cannot be refunded. If, however, the above-identified application is again allowed, petitioner may request that it be applied towards the issue fee required by the new Notice of Allowance.[1]

Telephone inquiries should be directed to the undersigned at (571) 272-3208.

The examiner of Technology Center AU 2611 will consider the request for continued examination under 37 CFR 1.114.

Karen Creasy
Petitions Examiner
Office of Petitions

[1] The request to apply the issue fee to the new Notice may be satisfied by completing and returning the new Issue Fee Transmittal Form PTOL-85(b), which includes the following language thereon: "Commissioner for Patents is requested to apply the Issue Fee and Publication Fee (if any) or re-apply any previously paid issue fee to the application identified above." Petitioner is advised that, whether a fee is indicated as being due or not, the Issue Fee Transmittal Form **must** be completed and timely submitted to avoid abandonment. Note the language in bold text on the first page of the Notice of Allowance and Fee(s) Due (PTOL-85).

UNITED STATES PATENT AND TRADEMARK OFFICE

Commissioner for Patents
United States Patent and Trademark Office
P.O. Box 1450
Alexandria, VA 22313-1450
www.uspto.gov

BAYER MATERIAL SCIENCE LLC
100 BAYER ROAD
PITTSBURGH, PA 15205

COPY MAILED

JUL 14 2005

OFFICE OF PETITIONS

In re Application of :
Puppe, et al. :
Application No. 10/322,961 : ON PETITION
Filed: December 18, 2002 :
Attorney Docket No. Mo-7489/LeA 35,632 :

This is a decision on the petition under 37 CFR 1.137(b), filed May 11, 2005, to revive the above-identified application.

The petition is **GRANTED**.

This application became abandoned for failure to timely file a proper reply to the final Office action mailed November 10, 2004. A two month extension of time having been obtained pursuant to the provisions of 37 CFR 1.136(a), the date of abandonment of this application is April 11, 2004.

The two-month period for filing an appeal brief (accompanied by the fee required by 37 CFR 41.20(b)(2)), runs from the date of this decision.

The file is being forwarded to Technology Center 1700.

Telephone inquiries concerning this matter may be directed to the undersigned at (571) 272-3228.

Edward J. Tannouse
Petitions Attorney
Office of Petitions/Patent
United States Patent and Trademark Office

UNITED STATES PATENT AND TRADEMARK OFFICE

Commissioner for Patents
United States Patent and Trademark Office
P.O. Box 1450
Alexandria, VA 22313-1450
www.uspto.gov

Paper No. 9

James P. Delaney
Jansson, Shupe, & Munger, Ltd.
Main Place - 245 Main Street
Racine, Wisconsin 53403

COPY MAILED

JUL 17 2003

OFFICE OF PETITIONS

In re Application of :
Scolaro, James M., et al. :
Application No. 10/322,973 : Decision
Filed: December 18, 2002 : On
For: Surface Enhancement and : Access
Modification System :

The above referenced application was referred to this office due to the power to inspect paper filed April 2, 2003, and additional related papers filed subsequent thereto by Ralph Rhein and his representative James P. Delaney.

In addition to the power to inspect, James P. Delaney, representing Mr. Rhein filed on April 11, 2003 four additional items: 1) a transmittal letter; 2) Declaration and power of attorney from Mr. Rhein; 3) Copy of notice to file missing parts; and 4) Check for $130. It appears that Mr. Rhein and/or his representative obtained access and/or made copies of the application at an earlier date, and at a time when access was appropriate because, at the time, Mr. Rhein was a named inventor.

When an application is initially filed without an executed declaration or oath the inventorship is corrected by the first subsequently filed executed oath or declaration. See 37 CFR 1.48(f)(1). Persons who are not a named inventor on the first signed declaration or oath are not a named inventor in the application.

The above referenced application was filed naming Renee J. Rymarz on the transmittal papers as the practitioner filing the application on December 1, 2002, without an executed oath or declaration. Ms. Rymarz appears to be representing Johnson Diversy, Inc. The first-filed executed declaration was filed on March 24, 2003, by Ms. Rymarz, and named five inventors but did not include Ralph Rhein.

Since Mr. Ralph Rhein was not a named inventor on the first-executed oath or declaration in the above referenced application, he is not an inventor in that application. The second-executed declaration filed April 11, 2003, naming Mr. Rhein as an inventor did not change the inventorship of the application.

Accordingly, Mr. Rhein and Mr. Delaney representing him have only the same rights as the general public with respect to access to

and filing papers in the above referenced application. The power to inspect filed April 2, 2003 and additional papers filed April 11, 2003 are inappropriate and are returned herewith.

A request for a refund of the $130 fee that accompanied the papers filed April 11, 2003, should include a copy of this decision.

Mr. Rhein and his representatives may file any papers that a member of the public can file in an unpublished application. See for example 37 CFR 1.291. Any additional papers that attempt to participate in the prosecution of the above referenced application will be returned. Prior to publication of the above referenced application, Mr. Rhein and his representatives are not permitted access to or copies of the above referenced application based upon Mr. Rhein being an inventor of the application.

Any correspondence with respect to this matter should be addressed as follows:

By mail: Mail Stop Petition
Commissioner for Patents
P.O. Box 1450
Alexandria, Virginia 22202

By FAX: (703) 872-9005
Attn: Office Patent Legal Administration/Michael L. Lewis

By hand: Crystal Plaza 4, CP4-3C23
2201 South Clark Place
Arlington, VA

Telephone inquiries should be directed to Michael L. Lewis at (703) 306-5585.

for /Michael Lewis/

Karin Ferriter
Senior Legal Advisor
Office of Patent Legal Administration
Office of the Deputy Commissioner
for Patent Examination Policy

Attachment: Returned papers

cc: Renee J. Rymarz (Attorney of Record)
S.C. JOHNSON COMMERCIAL MARKETS INC
8310 16TH STREET, M/S 510
PO BOX 902
STURTEVANT WI 53177-0902

UNITED STATES PATENT AND TRADEMARK OFFICE

UNITED STATES DEPARTMENT OF COMMERCE
United States Patent and Trademark Office
Address: COMMISSIONER FOR PATENTS
P.O. Box 1450
Alexandria, Virginia 22313-1450
www.uspto.gov

APPLICATION NO.	FILING DATE	FIRST NAMED INVENTOR	ATTORNEY DOCKET NO.	CONFIRMATION NO.
10/323,027	12/18/2002	Fred L. Ciske	00331.US1 DV1	9958

7590 03/04/2005

Pharmacia & Upjohn Company
Global Intellectual Property
301 Henrietta Street
Kalamazoo, MI 49001

EXAMINER	
SMALL, ANDREA D SOUZA	

ART UNIT	PAPER NUMBER
1626	

DATE MAILED: 03/04/2005

Please find below and/or attached an Office communication concerning this application or proceeding.

UNITED STATES
PATENT AND
TRADEMARK OFFICE

UNDER SECRETARY OF COMMERCE FOR INTELLECTUAL PROPERTY AND
DIRECTOR OF THE UNITED STATES PATENT AND TRADEMARK OFFICE
P.O. Box 1450
Alexandria, VA. 22313-1450
WWW.USPTO.GOV

PHARMACIA & UPJOHN COMPANY
Global Intellectual Property
301 Henrietta Street
Kalamazoo, Michigan 49001

Date: March 02,2005
Application No. 10/323,027
Filed: December 18, 2002
Subject: **Heterocyclic Carboxamides As Antiviral Agents**

ON PETITION
37 CFR 1.48(b)

Receipt is acknowledged of the petition filed January 09, 2004 under 37 CFR 1.48(b) for correction of inventorship. The petition has been **GRANTED**.

In view of the papers filed, it has been found that during the prosecution of the instant application a restriction was required and therefore, not all of the inventors contributed to the invention as now claimed. Accordingly, this application has been changed by the **deletion of Gordon L. Bundy, Michael J. Genin, Steven E. Heasley, Scott D. Larsen, Byung H. Lee, Paul D. May, Atli Thorarensen, Allison J. Wolf, Nancy A. Wicnienski and David Wilhite.** The application will be forwarded to the Office of Initial Patent Examination (OIPE) for issuance of a corrected filing receipt, and correction of the file jacket and PTO PALM data to reflect the inventorship as corrected.

Joseph K. McKane

JOSEPH K. MCKANE
United States Patent and Trademark Office
Technology Center 1600
SPE, ART UNIT 1626
Remsen 5A05
571-272-0699

UNITED STATES PATENT AND TRADEMARK OFFICE

Commissioner for Patents
United States Patent and Trademark Office
P.O. Box 1450
Alexandria, VA 22313-1450
www.uspto.gov

HOWARD M. PETERS
PETERS, VERNY, JONES & SCHMITT, LLP
425 SHERMAN AVENUE
SUITE 230
PALO ALTO, CA 94306

COPY MAILED

AUG 10 2006

OFFICE OF PETITIONS

In re Application of	:	
Santarsiero, et al.	:	
Application No. 10/323,037	:	DECISION ON PETITION
Filed: December 18, 2002	:	TO WITHDRAW
Attorney Docket No. 2960.54-8	:	FROM RECORD
	:	

This is a decision on the Request to Withdraw as attorney or agent of record under 37 C.F.R. § 1.36(b), filed March 10, 2006.

The request is **DISMISSED** as moot.

A review of the file record indicates that the power of attorney to Howard M Peters has been revoked by the assignee of the patent application on July 27, 2006. Accordingly, the request to withdraw under 37 C.F.R. § 1.36(b) is moot.

All future communications from the Office will continue to be directed to the below-listed address until otherwise notified by applicant.

Telephone inquires concerning this decision should be directed to April Wise at 571-272-1642.

David Bucci
Petitions Examiner
Office of Petitions

cc: JOHN A. BAUER
FULBRIGHT & JAWORSKI, LLP
666 FIFITH STREET
NEW YORK, NY 10103

UNITED STATES PATENT AND TRADEMARK OFFICE

Commissioner for Patents
United States Patent and Trademark Office
P.O. Box 1450
Alexandria, VA 22313-1450
www.uspto.gov

MICHAEL A. SLAVIN
MCHALE & SLAVIN, P.A.
2855 PGA BOULEVARD
PALM BEACH GARDENS FL 33410

COPY MAILED

SEP 14 2004

OFFICE OF PETITIONS

In re Application of :
Karl H. Hoffman :
Application No. 10/323,045 : ON PETITION
Filed: December 18, 2002 :
Attorney Docket No. 1595.010 :

This is a decision on the petition under 37 CFR 1.137(b), filed July 6, 2004, to revive the above-identified application.

The petition is **GRANTED**.

The above-identified application became abandoned for failure to reply in a timely manner to the non-final Office action mailed November 17, 2003, which set a shortened statutory period for reply of three (3) months. No extensions of time under the provisions of 37 CFR 1.136(a) were obtained. Accordingly, the above-identified application became abandoned on February 18, 2004.

Telephone inquiries concerning this decision should be directed to the undersigned at (703) 305-8859.

The application file is being forwarded to Technology Center AU 3749.

Karen Creasy
Petitions Examiner
Office of Petitions
Office of the Deputy Commissioner
for Patent Examination Policy

UNITED STATES PATENT AND TRADEMARK OFFICE

UNITED STATES DEPARTMENT OF COMMERCE
United States Patent and Trademark Office
Address: COMMISSIONER FOR PATENTS
P.O. Box 1450
Alexandria, Virginia 22313-1450
www.uspto.gov

Pabst Patent Group LLP
1545 PEACHTREE STREET NE
SUITE 320
ATLANTA, GA 30309

Mail Date: 04/21/2010

Applicant	: Jeffrey A. Hubbell	: DECISION ON REQUEST FOR
Patent Number	: 7601685	: RECALCULATION of PATENT
Issue Date	: 10/13/2009	: TERM ADJUSTMENT IN VIEW
Appliction No	: 10/323,046	: OF WYETH AND NOTICE OF INTENT TO
Filed	: 12/17/2002	: ISSUE CERTIFICATE OF CORRECTION
		:

The Request for Recalculation is **GRANTED** to the extent indicated.

The patent term adjustment has been determined to be **654** days. The USPTO will *sua sponte* issue a certificate of correction reflecting the amount of PTA days determined by the recalculation.

Prior to the issuance of the certificate of correction, the USPTO will afford patentee an opportunity to be heard and request reconsideration. Accordingly, patentee has **one month or thirty (30) days**, whichever is longer, to file a request for reconsideration of this patent term adjustment calculation. See 35 U.S.C. 154(b)(3)(B)(ii) and 37 CFR 1.322(a)(4). No extensions of time will be granted under 37 CFR 1.136.

Patentee should use document code PET.OP if electronically filing a request for reconsideration of this patent term adjustment calculation. The patentee must also include the information required by 37 CFR 1.705(b)(2) and the fee required by 37 CFR 1.18(e). If patentee does not file a timely request for reconsideration of this patent term adjustment calculation including the information required by 37 CFR 1.705(b)(2) and the fee required by 37 CFR 1.18(e), the USPTO will issue a certificate of correction reflecting the PTA determination noted above.

Patentee should be aware that in order to preserve the right to review in the United States District Court for the District of Columbia of the USPTO patent term adjustment determination, patentee must ensure that he or she also take the steps required under 35 U.S.C. 154(b)(4)(A) in a timely manner. Nothing in the request for recalculation should be construed as providing an alternative time frame for commencing a civil action under 35 U.S.C. 154(b)(4)(A).

Any questions concerning this decision should be directed to the Office of Patent Legal Administration at 571-272-7702.

UNITED STATES PATENT AND TRADEMARK OFFICE

Commissioner for Patents
United States Patent and Trademark Office
P. O. Box 1450
Alexandria, VA 22313-1450
www. uspto. gov

SENNIGER POWERS LLP
ONE METROPOLITAN SQUARE
16TH FLOOR
ST. LOUIS, MO 63102

COPY MAILED

JUL 10 2008

OFFICE OF PETITIONS

In re Patent No. 7,296,946 :
Issue Date: November 20, 2007 :
Application No. 10/323,052 : ON PETITION
Filed: December 18, 2002 :
Attorney Docket No. WWSM 2489.3 :

This is a decision on the petition filed November 27, 2007, which is being treated as a petition under 37 CFR 3.81(b)[1] to correct the assignee's name on the front page of the above-identified patent by way of a Certificate of Correction.

The petition is **granted.**

Telephone inquiries concerning this matter may be directed to the undersigned at (571) 272-3210. Any questions concerning the issuance of the Certificate of Correction should be directed to the Certificates of Correction Branch at (703) 305-8309.

This application is being forwarded to the Certificates of Correction Branch for issuance of the requested Certificate of Correction.

Irvin Dingle
Petitions Examiner
Office of Petitions

[1] See Official Gazette of June 22, 2004

UNITED STATES PATENT AND TRADEMARK OFFICE

COMMISSIONER FOR PATENTS
UNITED STATES PATENT AND TRADEMARK OFFICE
P.O. BOX 1450
ALEXANDRIA, VA 22313-1450
www.uspto.gov

HOWARD M. PETERS
PETERS VERNY JONES & SCHMITT, L.L.P.
425 SHERMAN AVENUE
SUITE 230
PALO ALTO, CA 94306

COPY MAILED
JUL 31 2006
OFFICE OF PETITIONS

In re Application of	:	
Bernard D. Santarsiero et al	:	
Application No. 10/323,054	:	DECISION ON PETITION
Filed: December 18, 2002	:	TO WITHDRAW
Attorney Docket No. 2960.54-13	:	FROM RECORD
	:	

This is a decision on the Request to Withdraw as attorney or agent of record under 37 C.F.R. § 1.36(b), filed March 10, 2006.

The request is **NOT APPROVED**.

A grantable request to withdraw as attorney/agent of record must be signed by every attorney/agent seeking to withdraw or contain a clear indication that one attorney is signing on behalf of another/others. A request to withdraw will not be approved unless at least 30 (thirty) days would remain between the date of approval and the later of the expiration date of a time to file a response or the expiration date of the maximum time period which can be extended under 37 C.F.R. § 1.136(a).

The request cannot be approved because 37 CFR 10.40 states, "[a] practitioner shall not withdraw from employment in a proceeding before the Office without permission from the Office[.]" Additionally, 37 CFR 10.40 states, "i[f] paragraph (b) of this section is not applicable, a practitioner may not request permission to withdraw in matters pending before the Office unless such request or such withdrawal is because: [. . .]" Reasons a practitioner can permissively withdraw follow the later quotation.

Since the request for withdrawal as attorney or agent submitted on March 10, 2006 provides no reasons for withdrawal, the Office cannot at this time determine whether practitioner's request is one of the mandatory or permissive reasons enumerated in 37 CFR 10.40. Any subsequent requests must include reasons for withdrawal. Please note that there is a space provided for on PTO/SB/83 (Request for Withdrawal as Attorney or Agent) to supply practitioner's reasons.

There is an outstanding Office action mailed March 24, 2006 that requires a reply from the applicant.

All future communications from the Office will continue to be directed to the above-listed address until otherwise notified by applicant.

Telephone inquiries concerning this decision should be directed to Irvin Dingle at 571-272-3210.

Denise Pothier
Petitions Examiner
Office of Petitions

cc: John A. Bauer
Fulbright & Jaworski, LLP
666 Fifth Avenue
New York, NY 10103

UNITED STATES PATENT AND TRADEMARK OFFICE

Commissioner for Patents
United States Patent and Trademark Office
P.O. Box 1450
Alexandria, VA 22313-1450
www.uspto.gov

spg

Mailed: 5/16/05

In re application of	:	
Josef Suren et al.	:	DECISION ON
Serial No. 10/323,067	:	PETITION
Filed: December 19, 2002	:	
For: METHOD AND COMPOSITION FOR PREVENTING TRAFFIC SURFACES BECOMING SLIPPERY IN WINTER	:	

This is a response to the PETITION TO WITHDRAW NOTICE OF ABANDONMENT filed on December 8, 2004. The petition requests that the abandonment, as set forth in the Notice of Abandonment of November 12, 2004, for failure to timely pay the required issue fee and publication fee, if applicable, within the statutory period of three months from the mailing date of the Notice of Allowance (PTOL-85) be withdrawn. The request asks that the abandonment be withdrawn because the Issue fee had already been paid.

BACKGROUND

- February 27, 2004: A NOTICE OF ALLOWANCE AND FEE(S) DUE (PTOL-85) is mailed indicating that an Issue fee of $1330 and Publication fee of $300 are due by May 27, 2004.
- April 16, 2004: Applicant's filed PART B - FEE(S) TRANSMITTAL (PTOL-85B) with the total required fees of $1630, the fees filed have been credited to the instant application.
- May 21, 2004: A CORRECTED NOTICE OF ALLOWANCE AND FEE(S) DUE (PTOL-85) is mailed indicated that no ("$0") fees are due. The CORRECTED NOTICE OF ALLOWANCE AND FEE(S) DUE (PTOL-85) mailed further states the following on page 1 of 3:

  > "THE ISSUE FEE DUE INDICATED ABOVE REFLECTS A CREDIT FOR ANY PREVIOUSLY PAID ISSUE FEE APPLIED IN THIS APPLICATION. **THE PTOL-85B (OR AN EQUIVALENT) MUST BE RETURNED WITHIN THIS PERIOD EVEN IF NO FEE IS DUE OR THE APPLICATION WILL BE REGARDED AS ABANDONED**." (emphasis added)

- September 24, 2004: A Notice of Abandonment is mailed with the box checked indicating that the application is abandoned for failure to timely pay the required issue fee and publication fee, if applicable, within the statutory period of three months from the mailing date of the Notice of Allowance (PTOL-85).

DECISION

The instant request has been accepted as a petition to withdraw the holding of abandonment under the provisions of 37 CFR 1.181(no fee) - no abandonment-in-fact. A review of the evidence presented by the applicant and a review of the USPTO application file establishes that the request cannot be granted. The CORRECTED NOTICE OF ALLOWANCE AND FEE(S) DUE (PTOL-85) mailed May 21, 2004 clearly sets forth that the "THE PTOL-85B (OR AN EQUIVALENT) **MUST** BE RETURNED WITHIN THIS PERIOD EVEN IF NO FEE IS DUE OR THE APPLICATION WILL BE REGARDED AS ABANDONED" (emphasis added) - since the applicant's failed to return the PTOL-85B, even though no fee was due, the application was correctly regarded as abandoned as stated in the CORRECTED NOTICE OF ALLOWANCE AND FEE(S) DUE (PTOL-85) mailed May 21, 2004.

The Petition is **DENIED**.

Jacqueline Stone, Director
Technology Center 1700
Chemical and Materials Engineering

MUSERLIAN, LUCAS AND MERCANTI, LLP
475 PARK AVENUE SOUTH
15TH FLOOR
NEW YORK NY 10016

UNITED STATES PATENT AND TRADEMARK OFFICE

Technology Center 1700

Mailed: 9/22/05

meb
Paper Number: _____

In re application of
Suren et al.

Serial No. 10/323,067
Filed: December 19, 2002
For: Method and Composition For Preventing Traffic Surfaces Becoming Slippery In Winter

DECISION ON PETITION

This is a response to the RENEWED PETITION TO WITHDRAW HOLDING OF ABANDONMENT, filed May 20, 2005. The petition requests that the abandonment, as set forth in the Notice of Abandonment of September 24, 2004 for failure to timely respond to timely pay the required issue fee and publication fee, if applicable, within the statutory period of three months from the mailing date of the Notice of Allowance (PTOL-85) be withdrawn. The petitioner asserts that the issue fee had already been paid and that the applicant has now returned the PTOL-85B, thus meeting the Office's requirements.

DECISION

The instant request is accepted as a petition under 37 C.F.R. 1.181 (no fee). A review of the evidence provided by the applicant and a review of the USPTO application file establishes that the request cannot be granted. The applicant has failed to show that the PTOL-85B form was returned to the office within the statutory period of three months from the mailing date of the Notice of Allowance, which was mailed May 21, 2004., which clearly sets forth that "THE PTOL-85B (OR AN EQUIVALENT) **MUST** BE RETURNED WITHIN THIS PERIOD EVEN IF NO FEE IS DUE OR THE APPLICATION WILL BE REGARDED AS ABANDONED" (emphasis added). Also, the PTOL-85B, submitted concurrently with the instant petition, was not signed. Furthermore, the instant petition was not signed.

Therefore, the Notice of Abandonment is not withdrawn.

The Petition is **DENIED**.

Jacqueline M. Stone

Jacqueline Stone, Director
Technology Center 1700
Chemical and Materials Engineering

Charles A. Muserlian
Hedman and Costigan
1185 Avenue of the Americas
New York, NY 10036

UNITED STATES PATENT AND TRADEMARK OFFICE

Commissioner for Patents
United States Patent and Trademark Office
P.O. Box 1450
Alexandria, VA 22313-1450
www.uspto.gov

HEDMAN & COSTIGAN P.C.
1185 AVENUE OF THE AMERICAS
NEW YORK, NY 10036

COPY MAILED

OCT 18 2005

OFFICE OF PETITIONS

In re Application of :
Josef Suren et al :
Application No. 10/323,067 : ON PETITION
Filed: December 19, 2002 :
Attorney Docket No. 302.136 :

This is a decision on the petition under 37 CFR 1.137(b), filed October 3, 2005, to revive the above-identified application.

The petition is **DISMISSED**.

Any request for reconsideration of this decision must be submitted within TWO (2) MONTHS from the mail date of this decision. Extensions of time under 37 CFR 1.136(a) are permitted. The reconsideration request should include a cover letter entitled "Renewed Petition under 37 CFR 1.137(b)." Petitioner is advised that this is **not** a final agency action decision.

The above-identified application became abandoned for failure to submit the issue fee/publication fee in a timely manner in reply to the Notice of Allowance mailed May 21, 2004, which set a statutory period for reply of three (3) months. Accordingly, the above-identified application became abandoned on August 24, 2004.

A grantable petition to revive an abandoned application under 37 CFR 1.137(b) must be accompanied by: (1) the required reply (unless previously filed), which may met by the filing of a continuing application in a nonprovisional application abandoned for failure to prosecute, but must be the payment of the issue fee or any outstanding balance thereof in an application or patent, abandoned or lapsed for failure to pay the issue fee or any portion thereof; (2) the petition fee as set forth in 37 CFR 1.17(m); (3) a statement that the entire delay in filing the required reply from the due date for the reply until the filing of a grantable petition pursuant to 37 CFR 1.137(b) was unintentional; and (4) any terminal disclaimer (and fee as set forth in 37 CFR 1.20(d)). This petition lacks item (**1**) above.

As to item (1), a petition to revive cannot be granted where there is an outstanding requirement. Effective December 8, 2004, the issue fee has been increased to $1,400. Therefore, an additional $70 is required.

Since petitioner has failed to submit the reply required by 37 CFR 1.137(b)(1), the petition must be dismissed.

The statement of unintentional delay presented in the petition does not comply with the current rule. Effective December 1, 1997, 37 C.F.R. §1.137 (b)(3) requires a statement that "the entire delay in filing the required reply from the due date for the reply until the filing of a grantable petition pursuant to 37 C.F.R. §1.137(b) was unintentional" be submitted. However, the statement presented will be accepted and construed as meaning that "the entire delay in filing the required reply from the due date for the reply until the filing of a grantable petition pursuant to 37 C.F.R. §1.137(b) was unintentional." If this is an incorrect interpretation in view of the rules, petitioner is required to provide a statement to that effect.

Further correspondence with respect to this matter should be addressed as follows:

By mail: Mail Stop PETITIONS
Commissioner for Patents
Post Office Box 1450
Alexandria, VA 22313-1450

By hand: Customer Service Window
Randolph Building
401 Dulany Street
Alexandria, VA 22314

By fax: (571) 273-8300

The change of correspondence address filed May 20, 2005 is entered and made of record.

Telephone inquiries concerning this decision should be directed to Wan Laymon at (571) 272-3220.

Wan Laymon
Petitions Examiner
Office of Petitions

UNITED STATES PATENT AND TRADEMARK OFFICE

Commissioner for Patents
United States Patent and Trademark Office
P.O. Box 1450
Alexandria, VA 22313-1450
www.uspto.gov

HEDMAN & COSTIGAN P.C.
1185 AVENUE OF THE AMERICAS
NEW YORK, NY 10036

COPY MAILED

NOV 0 4 2005

OFFICE OF PETITIONS

In re Application of :
Josef Suren et al :
Application No. 10/323,067 : ON PETITION
Filed: December 19, 2002 :
Attorney Docket No. 302.136 :

This is a decision on the renewed petition under 37 CFR 1.137(b), filed October 24, 2005, to revive the above-identified application.

The petition is **GRANTED**.

Telephone inquiries concerning this decision should be directed to Wan Laymon at (571) 272-3220.

This matter is being referred to Publishing Division.

Wan Laymon
Petitions Examiner
Office of Petitions

Full name of third inventor **Rajendra Krishnan**
Third inventor's signature Rajendra Krishnan Date August 16, 2004
Residence 7512 Saint George Circle, Portage, MI 49024
Citizenship USA
Post Office Address Same as residence

Full name of fourth inventor **Kimberly Jean Dreir**
Fourth inventor's signature Date
Residence 66 Manor Road, Montville, CT 06353
Citizenship USA
Post Office Address Same as residence

Full name of fifth inventor **David Ross McGavin**
Fifth inventor's signature Date
Residence 611 South Shore Drive, Portage, MI 49002
Citizenship USA
Post Office Address Same as residence

Full name of sixth inventor **John David Haworth**
Sixth inventor's signature Date
Residence 5515 Green Pine Lane, Kalamazoo, MI 49009
Citizenship USA
Post Office Address Same as residence

Full name of third inventor **Rajendra Krishnan**
Third inventor's signature Date
Residence 7512 Saint George Circle, Portage, MI 49024
Citizenship USA
Post Office Address Same as residence

Full name of fourth inventor kd 8-26-04 **Kimberly Jean ~~Dreir~~** Dreier
Fourth inventor's signature Date Kimberly Jean Dreier 8-26-04
Residence 66 Manor Road, ~~Montville, CT 06353~~ kd 8-26-04 Oakdale, CT 06370
Citizenship USA
Post Office Address Same as residence

Full name of fifth inventor **David Ross McGavin**
Fifth inventor's signature Date
Residence 611 South Shore Drive, Portage, MI 49002
Citizenship USA
Post Office Address Same as residence

Full name of sixth inventor **John David Haworth**
Sixth inventor's signature Date
Residence 5515 Green Pine Lane, Kalamazoo, MI 49009
Citizenship USA
Post Office Address Same as residence

OIPE JC32 SEP 07 2004 PATENT & TRADEMARK OFFICE

Full name of third inventor **Rajendra Krishnan**
Third inventor's signature Date
Residence 7512 Saint George Circle, Portage, MI 49024
Citizenship USA
Post Office Address Same as residence

Full name of fourth inventor **Kimberly Jean Dreir**
Fourth inventor's signature Date
Residence 66 Manor Road, Montville, CT 06353
Citizenship USA
Post Office Address Same as residence

Full name of fifth inventor **David Ross McGavin**
Fifth inventor's signature David Ross McGavin Date 24 AUG 2004
Residence 611 South Shore Drive, Portage, MI 49002
Citizenship USA
Post Office Address Same as residence

Full name of sixth inventor **John David Haworth**
Sixth inventor's signature Date
Residence 5515 Green Pine Lane, Kalamazoo, MI 49009
Citizenship USA
Post Office Address Same as residence

UNITED STATES PATENT AND TRADEMARK OFFICE

Commissioner for Patents
United States Patent and Trademark Office
P.O. Box 1450
Alexandria, VA 22313-1450
www.uspto.gov

Paper No.

Patrick S. Yoder
Fletcher, Yoder & Van Someren
P.O. Box 692289
Houston TX 77269-2289

COPY MAILED

MAR 31 2008

OFFICE OF PETITIONS

In re Application of	:	
Matthew J. Walker et al.	:	
Application No. 10/323,080	:	DECISION ON PETITION
Filing Date: December 18, 2002	:	PURSUANT TO
Attorney Docket No. 132302/YOD	:	37 C.F.R. § 1.10(c)
GEMS:0212	:	
Title: MEDICAL DATA OPERATING	:	
MODEL DEVELOPMENT SYSTEM AND	:	
METHOD	:	

This is a decision on the petition pursuant to 37 C.F.R. § 1.10(c), filed February 27, 2008, requesting the according of a filing date of December 18, 2002 to application number 10/323,080.

The application was deposited on December 19, 2002. Shortly thereafter, the Office mailed a filing receipt, indicating that application number 10/323,080 had been accorded a filing date of December 19, 2002.

With this petition, Petitioner has included a copy of the Express Mail label number EV135374275US[1].

Petitioner has alleged that the application was deposited on December 18, 2002, and the Patent Office has incorrectly assigned a filing date of December 19, 2002 to the present application. Petitioner has included a copy of the Express Mail label, and it

1 The Utility patent Application Transmittal sheet has been located in the electronic file, and it is noted that it contains this same Express Mail label number.

is noted that the "date in" field contains text that is illegible: the undersigned cannot discern whether the text reads "12 18 02" or "12 19 02." However, the label further contains a stamp that reads "DEC 18 2002."

Although the application received a filing date of December 19, 2002, the evidence is convincing that the application papers were filed on December 18, 2002, and the Patent Office assigned the incorrect date to this application. Therefore, the application was entitled to a filing date of December 18, 2002.

Accordingly, the petition is **GRANTED.**

The Office of Patent Application Processing (OPAP) will be notified of this decision so that the application may receive further processing. OPAP will accord a filing date of December 18, 2002 to this application, and will mail a corrected filing receipt.

The general phone number for OPAP is 571-272-4000. Telephone inquiries **regarding this decision** should be directed to the undersigned at (571) 272-3225[2].

/Paul Shanoski/
Paul Shanoski
Senior Attorney
Office of Petitions

---

2 Petitioner will note that all practice before the Office should be in writing, and the action of the Office will be based exclusively on the written record in the Office. See 37 C.F.R. § 1.2. As such, Petitioner is reminded that no telephone discussion may be controlling or considered authority for any further action(s) of Petitioner.

UNITED STATES PATENT AND TRADEMARK OFFICE

COMMISSIONER FOR PATENTS
UNITED STATES PATENT AND TRADEMARK OFFICE
P.O. BOX 1450
ALEXANDRIA, VA 22313-1450
www.uspto.gov

Michael D. Stein
WOODCOCK WASHBURN LLP
46th Floor
One Liberty Place
Philadelphia, PA 19103

COPY MAILED

NOV 2 0 2006

OFFICE OF PETITIONS

In re Application of :
Bragg, et al. :
Application No. 10/323,126 : DECISION ON PETITION
Filed: December 18, 2002 :
Docket No.: IVPD-0030 :

This is a decision on the petition under 37 CFR 1.181, filed October 10, 2006, to withdraw the holding of abandonment.

The petition is **DISMISSED**.

The application became abandoned for failure to timely submit a properly reply to the non-final Office action mailed October 18, 2005. The non-final Office action set a three month shortened statutory period of time for reply. Notice of Abandonment was mailed May 22, 2006.

Petitioners assert non-receipt of the Office communication.

In the absence of any irregularity in the mailing of the Office communication, there is a strong presumption that the Office communication was properly mailed to practitioner at the address of record. This presumption may be overcome by a showing that the Office communication was not in fact received. The showing required to establish non-receipt of an Office communication must include a statement from the practitioner stating that the Office communication was not received by the practitioner and attesting to the fact that a search of the file jacket and docket records indicates that the Office communication was not received. A copy of the docket record where the non-received Office communication would have been entered had it been received and docketed must be attached to and referenced in practitioner's statement. *See*, MPEP 711.03(c). The showing outlined above may not be sufficient if there are circumstances that point to a conclusion that the Office communication may have been lost after receipt rather than a conclusion that the Office communication was lost in the mail.

However, where an application becomes abandoned as a consequence of a change of correspondence address (the Office action being mailed

to the old, uncorrected address and failing to reach the applicant in sufficient time to permit a timely reply), petitioners are required to establish that due care was taken to adhere to the requirement for prompt notification in each concerned application of the change of address (See, MPEP 601.03), and must include an adequate showing that a timely notification of the change of address was filed in the application concerned, and in a manner reasonably calculated to call attention to the fact that it was a notification of a change of address. See, MPEP 711.03(c).

A review of the application file does not indicate that a change of correspondence address was submitted prior to the mailing of the Office action. Accordingly, it cannot be found that the application was improperly mailed to an incorrect correspondence address.

ALTERNATE VENUE

Petitioner is strongly urged to consider filing a petition stating that the entire delay was unintentional. Petitioner's attention is directed to 37 CFR 1.137(b) which provides for the revival of an "unintentionally" abandoned application without a showing that the delay in prosecution or in late payment of an issue fee was "unavoidable". An "unintentional" petition under 37 CFR 1.137(b) must be accompanied by the required petition fee and reply.

The filing of a petition under 37 CFR 1.137(b) cannot be intentionally delayed and therefore must be filed promptly. A person seeking revival due to unintentional delay cannot make a statement that the delay was unintentional unless the entire delay, including the delay from the date it was discovered that the application was abandoned until the filing of the petition to revive under 37 CFR 1.137(b), was unintentional. A statement that the delay was unintentional is not appropriate if petitioner intentionally delayed the filing of a petition for revival under 37 CFR 1.137(b).

Further correspondence with respect to this matter should be addressed as follows:

By mail:	**Mail Stop Petition** Commissioner for Patents P.O. Box 1450 Alexandria, VA 22313-1450
By facsimile:	(571) 273-8300
By hand delivery:	U.S. Patent and Trademark Office

Customer Window, **Mail Stop Petition**
Randolph Building
401 Dulany Street
Alexandria, VA 22314

Telephone inquiries concerning this matter may be directed to the undersigned at 571-272-3205.

Alesia M. Brown
Petitions Attorney
Office of Petitions

UNITED STATES PATENT AND TRADEMARK OFFICE

Commissioner for Patents
United States Patent and Trademark Office
P.O. Box 1450
Alexandria, VA 22313-1450
www.uspto.gov

COPY MAILED

JUN 19 2007

OFFICE OF PETITIONS

WOODCOCK WASHBURN LLP
CIRA CENTRE, 12TH FLOOR
2929 ARCH STREET
PHILADELPHIA PA 19104-2891

In re Application of
William D. Bragg, et al.
Application No. 10/323,126
Filed: December 18, 2002
Attorney Docket No. IVPD-0030

ON PETITION

This is a decision in response to the petition, filed March 1, 2007, to revive the above-identified application under the provisions of 37 CFR 1.137(b).

The petition is **GRANTED**.

The application became abandoned for a failure to reply in a timely manner to a non-final Office action mailed October 18, 2005. A Notice of Abandonment was mailed on May 22, 2006. In response, on March 1, 2007, the present petition was filed.

The petition satisfies the conditions for revival pursuant to the provisions of 37 CFR 1.137(b) in that petitioner has supplied (1) the reply in the form of an amendment; (2) the petition fee of $1,500; and (3) an adequate statement of unintentional delay.

The application is being referred to Technology Center AU 2883 for consideration of the amendment filed March 1, 2007.

Telephone inquiries concerning this decision should be directed to the undersigned at (571) 272-3204. Inquiries relating to further prosecution should be directed to the Technology Center.

Sherry D. Brinkley
Petitions Examiner
Office of Petitions

UNITED STATES PATENT AND TRADEMARK OFFICE

UNITED STATES DEPARTMENT OF COMMERCE
United States Patent and Trademark Office
Address: COMMISSIONER FOR PATENTS
P.O. Box 1450
Alexandria, Virginia 22313-1450
www.uspto.gov

SCHWEGMAN, LUNDBERG & WOESSNER, P.A.
P.O. BOX 2938
MINNEAPOLIS, MN 55402

Mail Date: 06/02/2010

Applicant	: Thomas S. Dory	: DECISION ON REQUEST FOR
Patent Number	: 7637008	: RECALCULATION of PATENT
Issue Date	: 12/29/2009	: TERM ADJUSTMENT IN VIEW
Application No	: 10/323,165	: OF WYETH AND NOTICE OF INTENT TO
Filed	: 12/18/2002	: ISSUE CERTIFICATE OF CORRECTION
		:

The Request for Recalculation is **GRANTED** to the extent indicated.

The patent term adjustment has been determined to be **799** days. The USPTO will *sua sponte* issue a certificate of correction reflecting the amount of PTA days determined by the recalculation.

Prior to the issuance of the certificate of correction, the USPTO will afford patentee an opportunity to be heard and request reconsideration. Accordingly, patentee has **one month or thirty (30) days**, whichever is longer, to file a request for reconsideration of this patent term adjustment calculation. See 35 U.S.C. 154(b)(3)(B)(ii) and 37 CFR 1.322(a)(4). No extensions of time will be granted under 37 CFR 1.136.

Patentee should use document code PET.OP if electronically filing a request for reconsideration of this patent term adjustment calculation. The patentee must also include the information required by 37 CFR 1.705(b)(2) and the fee required by 37 CFR 1.18(e). If patentee does not file a timely request for reconsideration of this patent term adjustment calculation including the information required by 37 CFR 1.705(b)(2) and the fee required by 37 CFR 1.18(e), the USPTO will issue a certificate of correction reflecting the PTA determination noted above.

Patentee should be aware that in order to preserve the right to review in the United States District Court for the District of Columbia of the USPTO patent term adjustment determination, patentee must ensure that he or she also take the steps required under 35 U.S.C. 154(b)(4)(A) in a timely manner. Nothing in the request for recalculation should be construed as providing an alternative time frame for commencing a civil action under 35 U.S.C. 154(b)(4)(A).

Any questions concerning this decision should be directed to the Office of Patent Legal Administration at 571-272-7702.

UNITED STATES PATENT AND TRADEMARK OFFICE

COMMISSIONER FOR PATENTS
UNITED STATES PATENT AND TRADEMARK OFFICE
WASHINGTON, D.C. 20231
www.uspto.gov

Paper No. 7

DUANE MORRIS, LLP
ATTN: WILLIAM H. MURRAY
ONE LIBERTY PLACE
1650 MARKET STREET
PHILADELPHIA, PA 19103-7396

COPY MAILED

MAY 2 2 2003

OFFICE OF PETITIONS

In re Application of
Danjo, et al.
Application No. 10/323,196
Filed: December 18, 2002
Attorney Docket No.: D3301-00116

ON PETITION

This decision in response to the petition entitled "PETITION TO RESCIND NOTICE OF OMITTED ITEMS IN A NON-PROVISIONAL APPLICATION" filed March 31, 2003 in response to the "Notice of Omitted Items in a Nonprovisional Application ("Notice") mailed February 7, 2003. This petition is also is being treated as a petition to accord this application a filing date of December 18, 2002.

The application was filed December 18, 2002. The Notice mailed February 7, 2003 by the Office of Initial Patent Examination notified applicant that the application had been accorded a filing date but that Figures 3 and 4 as described in the specification appeared to have been omitted.

Petitioner argues that the Notice should be withdrawn as the application as deposited included four (4) sheets of drawings which included Figures 3 and 4. Petitioner has included as proof of mailing and proof of receipt of the drawings in question a return postcard date stamped by the Office on December 18, 2002. Petitioner has also supplied a copy of the original four (4) drawing sheets, including Figures 3 and 4 purportedly filed with the application on December 18, 2002.

The original drawing sheets featuring Figures 3 and 4 submitted with the application papers have not been located. However, in view of the evidence presented, the Notice is hereby WITHDRAWN and the petition to accord the application a filing date of December 18, 2002 is GRANTED.

Since the original drawing sheets containing Figures 3 and 4 cannot be located in the Office, the copy supplied with the instant petition will be used for examination purposes.

The petition fee of $130.00 submitted with the instant petition is unnecessary. Petitioner may request a refund by writing to the Finance Office, Refund Section. A copy of this decision should accompany any request for refund.

This application will be returned to the Office of Initial Patent Examination for further processing with a filing date of February 7, 2003.

Telephone inquiries related to this decision may be directed to Petitions Attorney Alesia M. Brown at (703) 305-0310.

Beverly M. Flanagan
Supervisory Petitions Examiner
Office of Petitions

Alesia M. Brown
Petitions Attorney
Office of Petitions

UNITED STATES PATENT AND TRADEMARK OFFICE

Commissioner for Patents
United States Patent and Trademark Office
P.O. Box 1450
Alexandria, VA 22313-1450
www.uspto.gov

CAROL WILSON
BP AMERICA INC.
MAIL CODE 5 EAST
4101 WINFIELD ROAD
WARRENVILLE IL 60555

COPY MAILED

JUN 27 2007

OFFICE OF PETITIONS

In re Application of
GONG, et al.
Application No. 10/323,215
Filed: December 18, 2002
Attorney Docket No. **CN 37,387-00**

DECISION ON PETITION

This is a decision on the petition under the unintentional provisions of 37 CFR 1.137(b), filed October 6, 2007, to revive the above-identified application.

The petition is **GRANTED**.

This application became abandoned for failure to timely pay the issue and publication fees on or before August 21, 2006, as required by the Notice of Allowance and Fee(s) Due, mailed May 19, 2006 . Accordingly, the date of abandonment of this application is August 22, 2006 .

The petition satisfies the requirements of 37 CFR 1.137(b) in that petitioner has supplied (1) the reply in the form of payment of the issue fee of $1400 and the publication fee of $300, (2) the petition fee of $1500; and (3) a proper statement of unintentional delay.

Telephone inquiries concerning this decision should be directed to Monica A. Graves at (571) 272-7253.

This application is being referred to Publishing Division for processing into a patent.

Sherry D. Brinkley
Petitions Examiner
Office of Petitions

UNITED STATES PATENT AND TRADEMARK OFFICE

COMMISSIONER FOR PATENTS
UNITED STATES PATENT AND TRADEMARK OFFICE
P.O. BOX 1450
ALEXANDRIA, VA 22313-1450
www.uspto.gov

Paper No.

FOLEY & LARDNER LLP
P.O. BOX 80278
SAN DIEGO CA 92138-0278

COPY MAILED

APR 22 2008

OFFICE OF PETITIONS

In re Application Of :
Bartels et al. : LETTER REGARDING
Application No. 10/323,232 : PATENT TERM ADJUSTMENT
Filed: December 18, 2002 :
Attorney Docket No. HYDRA1100-1 :

This is in response to the "COMMUNICATION REGARDING PATENT TERM ADJUSTMENT," filed February 1, 2008. Applicants disclose that the patent term adjustment indicated in the notice of allowance should be eighty-two (82) days, not one hundred forty-one (141) days.

The request for review of the patent term adjustment is **GRANTED to the extent indicated herein**.

The Office has updated the PAIR screen to reflect that the correct Patent Term Adjustment (PTA) determination at the time of the mailing of the Notice of Allowance is zero **(0)** days. A copy of the updated PAIR screen, showing the correct determination, is enclosed.

On November 5, 2007, the Office mailed the Determination of Patent Term Adjustment under 35 U.S.C. 154(b) in the above-identified application. The Notice stated that the patent term adjustment to date is 141 days. Applicants disclose that the Office failed to attribute 59 days delay between February 4, 2006 and April 4, 2006 to Applicant.

A review of the application history confirms this error. Applicants' response to the final rejection mailed November 4, 2005, was not received by the Office until April 4, 2006. Thus, this response was not timely filed within the three-month period under 37 CFR 1.704(b) and applicants should have been assessed a reduction of 59 days for the delay in excess of three months (i.e., the number of days in the period beginning on February 5,

2006 and April 4, 2006). Accordingly, a period of reduction of 59 days is being entered.

In addition, the patent term adjustment at the time of the mailing of the notice of allowance does not consider that the appeal brief filed May 18, 2007 was defective. Pursuant to 37 CFR 1.704(c)(7), an additional period of reduction of 68 days should have been entered. 37 C.F.R. §1.704(c)(7) provides that a period of reduction is entered for:

> Submission of a reply having an omission (§1.135(c)), in which case the period of adjustment set forth in § 1.703 shall be reduced by the number of days, if any, beginning on the day after the date the reply having an omission was filed and ending on the date that the reply or other paper correcting the omission was filed.

In this instance, a first appeal brief was filed on May 18, 2007. By Notice mailed June 26, 2007, applicants were advised that the Appeal Brief was defective. On July 25, 2007, applicants filed an appeal brief, which cured the omission. Thus, the period of reduction is 68 days counting the number of days in the period beginning on May 19, 2007, the day after the defective appeal brief was filed, and ending on July 25, 2007, the date that the corrected appeal brief was filed. Accordingly, a period of reduction of 68 days is being entered.

Moreover, given that an appeal brief in compliance was not filed until July 25, 2007, the period of adjustment for Office delay in responding with the mailing of a Notice of Allowance on November 5, 2007 is not 48 days. Rather, the period of adjustment is 0 days. There was no Office delay, within the meaning of 37 CFR 1.703(a)(4). The Office took action within four months of the filing of the appeal brief in compliance with § 1.192 was filed, September 26, 2007. Accordingly, the period of adjustment of 48 days is being removed.

In view thereof, the patent term adjustment at the time of the mailing of the notice of allowance is zero (0) days.

As this letter was submitted as an advisement to the Office of an error in applicants' favor, the Office will not assess the $200.00 fee under 37 CFR 1.18(e). The Office thanks applicants for their good faith and candor in bringing this to the attention of the Office.

The application is being forwarded to the Publications Division for issuance of a patent. The patent term adjustment indicated on the patent (as shown on the Issue Notification mailed about three weeks prior to patent issuance) will include any additional adjustment accrued both for Office delay in issuing the patent more than four months after payment of the issue fee and satisfaction of all outstanding requirements, and for the Office taking in excess of three years to issue the patent (to the extent that the three-year period does not overlap with periods already accorded).

Telephone inquiries specific to this matter should be directed to the undersigned at (571) 272-3219.

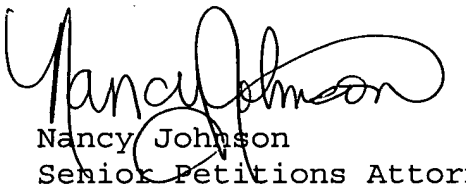

Nancy Johnson
Senior Petitions Attorney
Office of Petitions

Enclosure: Copy of REVISED PALM Screen

PTA Calculations for Application: 10/323232			
Application Filing Date:	12/18/2002	PTO Delay (PTO):	243
Issue Date of Patent:		Three Years:	0
Pre-Issue Petitions:	0	Applicant Delay (APPL):	102
Post-Issue Petitions:	0	Total PTA (days):	0
PTO Delay Adjustment:	-175		

File Contents History

Number	Date	Contents Description	PTO	APPL	START
80	04/21/2008	ADJUSTMENT OF PTA CALCULATION BY PTO		48	
79	04/21/2008	ADJUSTMENT OF PTA CALCULATION BY PTO		68	
78	04/21/2008	ADJUSTMENT OF PTA CALCULATION BY PTO		59	
66	11/05/2007	MAIL NOTICE OF ALLOWANCE	48		45
65	11/05/2007	MAIL EXAMINER'S AMENDMENT			
64	11/05/2007	MAIL EXAMINER INTERVIEW SUMMARY (PTOL - 413)			
63	11/02/2007	ISSUE REVISION COMPLETED			
62	11/02/2007	DOCUMENT VERIFICATION			
61	11/02/2007	NOTICE OF ALLOWANCE DATA VERIFICATION COMPLETED			
60	10/30/2007	EXAMINER INTERVIEW SUMMARY RECORD (PTOL - 413)			
59	11/02/2007	EXAMINER'S AMENDMENT COMMUNICATION			
53	09/28/2007	CASE DOCKETED TO EXAMINER IN GAU			
52	09/27/2007	NOTICE OF ALLOWABILITY			
51	08/21/2007	APPEAL BRIEF REVIEW COMPLETE			
50	08/21/2007	DATE FORWARDED TO EXAMINER			
49	07/25/2007	APPEAL BRIEF FILED			
48	06/26/2007	NOTICE -- DEFECTIVE APPEAL BRIEF			
47	06/20/2007	APPEAL BRIEF REVIEW COMPLETE			
46	06/20/2007	DATE FORWARDED TO EXAMINER			
45.1	05/18/2007	DEFECTIVE / INCOMPLETE APPEAL BRIEF FILED			
45	05/18/2007	APPEAL BRIEF FILED			
44	05/18/2007	REQUEST FOR EXTENSION OF TIME - GRANTED			

43	01/24/2007	NOTICE OF APPEAL FILED			
42	10/24/2006	MAIL FINAL REJECTION (PTOL - 326)			
41	10/23/2006	FINAL REJECTION			
40	04/21/2006	INFORMATION DISCLOSURE STATEMENT CONSIDERED			
39	09/26/2006	DATE FORWARDED TO EXAMINER			
38	09/22/2006	RESPONSE AFTER NON-FINAL ACTION		63	35
37	09/22/2006	REQUEST FOR EXTENSION OF TIME - GRANTED			
36.7	04/21/2006	INFORMATION DISCLOSURE STATEMENT (IDS) FILED			
36	04/21/2006	INFORMATION DISCLOSURE STATEMENT (IDS) FILED			
35	04/21/2006	MAIL NON-FINAL REJECTION			
34	04/17/2006	NON-FINAL REJECTION			
33	04/11/2006	DATE FORWARDED TO EXAMINER			
32	04/04/2006	AMENDMENT SUBMITTED/ENTERED WITH FILING OF CPA/RCE			
31	04/11/2006	DATE FORWARDED TO EXAMINER			
30	04/04/2006	REQUEST FOR CONTINUED EXAMINATION (RCE)			
29	04/11/2006	DISPOSAL FOR A RCE/CPA/129 (EXPRESS ABANDONMENT IF CPA)			
28	04/04/2006	REQUEST FOR EXTENSION OF TIME - GRANTED			
27	04/04/2006	WORKFLOW - REQUEST FOR RCE - BEGIN			
26	11/04/2005	MAIL FINAL REJECTION (PTOL - 326)			
25	11/01/2005	FINAL REJECTION			
24	10/06/2005	DATE FORWARDED TO EXAMINER			
23	09/29/2005	RESPONSE AFTER NON-FINAL ACTION		9	21
22	09/29/2005	REQUEST FOR EXTENSION OF TIME - GRANTED			
21	06/20/2005	MAIL NON-FINAL REJECTION			
20	06/16/2005	NON-FINAL REJECTION			
19	05/19/2005	DATE FORWARDED TO EXAMINER			
18	05/06/2005	RESPONSE AFTER NON-FINAL ACTION		30	16
17	05/06/2005	REQUEST FOR EXTENSION OF TIME - GRANTED			
16	01/06/2005	MAIL NON-FINAL REJECTION			
15	01/05/2005	NON-FINAL REJECTION			

14	12/03/2004	DATE FORWARDED TO EXAMINER			
13	11/30/2004	RESPONSE AFTER NON-FINAL ACTION			
12	08/31/2004	MAIL NON-FINAL REJECTION	195		-1
11	08/30/2004	NON-FINAL REJECTION			
10	04/27/2004	IFW TSS PROCESSING BY TECH CENTER COMPLETE			
9	04/27/2004	CASE DOCKETED TO EXAMINER IN GAU			
8	04/27/2004	REFERENCE CAPTURE ON IDS			
7.7	04/04/2003	INFORMATION DISCLOSURE STATEMENT (IDS) FILED			
7	04/04/2003	INFORMATION DISCLOSURE STATEMENT (IDS) FILED			
6	03/27/2003	APPLICATION DISPATCHED FROM OIPE			
5	03/27/2003	APPLICATION IS NOW COMPLETE			
4	03/20/2003	CLEARED BY L&R (LARS)			
3	01/27/2003	IFW SCAN & PACR AUTO SECURITY REVIEW			
2	12/31/2002	IFW SCAN & PACR AUTO SECURITY REVIEW			
1	12/18/2002	INITIAL EXAM TEAM NN			

Search Another: Application# Search

EXPLANATION OF PTA CALCULATION

EXPLANATION OF PTE CALCULATION

To go back, right click here and select Back. To go forward, right click here and select Forward. To refresh, right click here and select Refresh.

Back to OASIS | Home page

UNITED STATES PATENT AND TRADEMARK OFFICE

Commissioner for Patents
United States Patent and Trademark Office
P.O. Box 1450
Alexandria, VA 22313-1450
www.uspto.gov

JJGJR.: 04-06

Paper No:__

KENYON & KENYON LLP
ONE BROADWAY
NEW YORK NY 10004

COPY MAILED

APR 17 2006

OFFICE OF PETITIONS

In re Application of :
Blatter, et al. :
Application No. 10/323,241 :
Filing Date: 2 March, 2004 :
Attorney Docket No.: HL/95-22800/A :

DECISION

This is a decision on the petition filed on 23 March, 2006, requesting withdrawal of the holding of abandonment under 37 C.F.R. §1.181.

For the reasons set forth below, the petition as considered under 37 C.F.R. §1.181 is **GRANTED**.

BACKGROUND

The record reflects that:

- it appeared that Petitioner failed to reply timely and properly to the final Office action mailed on 16 February, 2005, with reply due absent an extension of time on or before 16 May, 2005;
- in that context the application would have gone abandoned after midnight 16 May, 2005;
- in fact, Petitioner filed on 19 August, 2005 (over a 16 August, 2005, certificate of mailing), a request and fee for extension of time with a Notice of Appeal and fee and an after-final Amendment;
- the Examiner mailed an Advisory Action on 29 September, 2005;

- the Office mailed the Notice of Abandonment on 1 March, 2006;
- on 23 March, 2006, Petitioner filed the instant petition, averring therein that the application never was abandoned (with a date-stamped receipt card in support of the averments), and included therewith (over a 20 March, 2006, certificate of mailing), a request and fee for extension of time with an Appeal Brief and fee.

STATUTES, REGULATIONS AND ANALYSIS

Congress has authorized the Commissioner to "revive an application if the delay is shown to the satisfaction of the Commissioner to have been "unavoidable." 35 U.S.C. §133 (1994).[1]

The regulations at 37 C.F.R. §1.137(a) and (b) set forth the requirements for a petitioner to revive a previously unavoidably or unintentionally, respectively, abandoned application under this congressional grant of authority. The language of 35 U.S.C. §133 and 37 C.F.R. §1.137(a) is clear, unambiguous, and without qualification: the delay in tendering the reply to the outstanding Office action, as well as filing the first petition seeking revival, must have been unavoidable for the reply now to be accepted on petition.[2]

Delays in responding properly raise the question whether delays are unavoidable.[3] Where there is a question whether the delay was unavoidable, Petitioners must meet the burden of establishing that the delay was unavoidable within the meaning of 35 U.S.C. §133 and 37 C.F.R. §1.137(a).[4] And the Petitioner must be diligent in attending to the matter.[5] Failure to do so does not constitute the care required under Pratt, and so cannot satisfy the test for diligence and due care.

(By contrast, unintentional delays are those that do not satisfy the very strict statutory and

---

[1] 35 U.S.C. §133 provides:
35 U.S.C. §133 Time for prosecuting application.
Upon failure of the applicant to prosecute the application within six months after any action therein, of which notice has been given or mailed to the applicant, or within such shorter time, not less than thirty days, as fixed by the Commissioner in such action, the application shall be regarded as abandoned by the parties thereto, unless it be shown to the satisfaction of the Commissioner that such delay was unavoidable.

[2] Therefore, by example, an unavoidable delay in the payment of the Filing Fee might occur if a reply is shipped by the US Postal Service, but due to catastrophic accident, the delivery is not made.

[3] See: *Changes to Patent Practice and Procedure; Final Rule Notice*, 62 *Fed. Reg.* at 53158-59 (October 10, 1997), 1203 *Off. Gaz. Pat. Office* at 86-87 (October 21, 1997).

[4] See: In re Application of G, 11 USPQ2d 1378, 1380 (Comm'r Pats. 1989).

[5] See: Diligence in Filing Petitions to Revive and Petitions to Withdraw the Holding of Abandonment, 1124 Off. Gaz. Pat. Office 33 (March 19, 1991). It was and is Petitioner's burden to exercise diligence in seeking either to have the holding of abandonment withdrawn or the application revived. See 1124 Off. Gaz. Pat. Office supra.

regulatory requirements of unavoidable delay, and also, by definition, are not intentional.[6]))

Allegations as to the Request to
Withdraw the Holding of Abandonment

The courts have determined the construct for properly supporting a petition seeking withdrawal of a holding of abandonment.[7]

It appears that Petitioner has satisfied the requirements of the regulation and the case law as discussed above.

CONCLUSION

Because Petitioner has satisfied the burdens set forth in Delgar v. Schulyer, the petition as considered under 37 C.F.R. §1.181 hereby is **granted**, fees are waived and none have been charged; and the Notice of Abandonment of 1 March, 2006, hereby is **vacated**. (Copies of some papers, previously mailed incorrectly, are enclosed for Petitioner's reference.)

The instant matter is released to Technology Center 1600 for the Examiner's Answer to the Appeal Brief, in due course.

Telephone inquiries concerning this decision may be directed to the undersigned at (571) 272-3214.

John J. Gillon, Jr.
Senior Attorney
Office of Petitions

---

[6] Therefore, by example, an unintentional delay in the reply might occur if the reply and transmittal form are to be prepared for shipment by the US Postal Service, but other pressing matters distract one's attention and the mail is not timely deposited for shipment.

[7] See: Delgar v. Schulyer, 172 USPQ 513 (D.D.C. 1971).

UNITED STATES PATENT AND TRADEMARK OFFICE

Commissioner for Patents
United States Patent and Trademark Office
P.O. Box 1450
Alexandria, VA 22313-1450
www.uspto.gov

BRACEWELL & PATTERSON
INTELLECTUAL PROPERTY LAW
P.O. BOX 61389
HOUSTON, TX 77208-1389

COPY MAILED

DEC 0 2 2004

OFFICE OF PETITIONS

In re Application of :
Deborah K. Nelson et al :
Application No. 10/323,270 : ON PETITION
Filed: December 20, 2002 :
Attorney Docket No. 076157.000002 :

This is a decision on the petition, filed October 12, 2004, to change the name of inventor D. Kay Shillings to "Deborah K. Nelson."

The petition is granted.

A copy of the corrected filing receipt is enclosed.

Telephone inquiries concerning this matter may be directed to Wan Laymon at (571) 272-3220.

This matter is being referred to Technology Center AU 3632 to await a reply to the final Office action mailed July 1, 2004.

Wan Laymon
Petitions Examiner
Office of Petitions
Office of the Deputy Commissioner
for Patent Examination Policy

Enclosure: Corrected Filing Receipt

UNITED STATES PATENT AND TRADEMARK OFFICE

UNITED STATES DEPARTMENT OF COMMERCE
United States Patent and Trademark Office
Address: COMMISSIONER FOR PATENTS
P.O. Box 1450
Alexandria, Virginia 22313-1450
www.uspto.gov

APPLICATION NO.	FILING DATE	FIRST NAMED INVENTOR	ATTORNEY DOCKET NO.	CONFIRMATION NO.
10/323,274	12/18/2002	Wayne Godfrey	P2004C2	9501

7590 01/21/2004

Genentech, Inc.
1 DNA Way
South San Francisco, CA 94080-4990

EXAMINER	
KEMMERER, ELIZABETH	
ART UNIT	**PAPER NUMBER**
1646	

DATE MAILED: 01/21/2004

Please find below and/or attached an Office communication concerning this application or proceeding.

UNITED STATES PATENT AND TRADEMARK OFFICE

COMMISSIONER FOR PATENTS
UNITED STATES PATENT AND TRADEMARK OFFICE
P.O. BOX 1450
ALEXANDRIA, VA 22313-1450
www.uspto.gov

JAN 22 2004

GENENTECH, INC.
1 DNA WAY
SOUTH SAN FRANCISCO CA 94080-4990

In re Application of :
Wayne Godfres et al :
Serial No.: 10/323,274 : PETITION TO MAKE SPECIAL
Filed: December 18, 2002 :
Attorney Docket No.: T3535-900326 :

This is in response to applicants' petition filed August 27, 2003, to make the above-identified application special under the provisions of 37 CFR 1.102(d).

The petition fee of $130.00 will be charged to applicants' Deposit Account No. 50-2468, as directed.

Applicant has satisfied the provisions set forth in M.P.E.P. 708.02, VIII. Therefor the petition is **GRANTED**.

The following condition applies to the grant of this petition: If, upon examination, it is determined that a restriction requirement is necessary because of multiple inventions being claimed, applicant will be required to make an election without traverse of a single invention to be prosecuted. Failure to make an election without traverse will void the special status accorded in this decision.

The application will be forwarded the examiner for action on the merits commensurate with this decision.

Should there be any questions with regard to this letter please contact William R. Dixon, Jr. by letter addressed to the Director, Technology Center 1600, Washington, DC 20231, or by telephone at (703) 308-3824 or by facsimile transmission at (703) 305-7230

William R. Dixon, Jr.
Special Program Examiner
Technology Center 1600

UNITED STATES PATENT AND TRADEMARK OFFICE

Commissioner for Patents
United States Patent and Trademark Office
P.O. Box 1450
Alexandria, VA 22313-1450
www.uspto.gov

BRANDON N. SKLAR. ESQ. (PATENT PROSECUTION)
KAYE SCHOLER, LLP
425 PARK AVENUE
NEW YORK NY 10022-3598

COPY MAILED

SEP 21 2007

OFFICE OF PETITIONS

In re Application of
Timmins et al.
Application No. 10/323,287
Filed: December 19, 2002
Attorney Docket No.:41698-1077

DECISION ON PETITION

This is a decision on the petition under 37 CFR 1.137(b), filed March 2, 2007, to revive the above-identified application.

This above-identified application became abandoned for failure to timely file a reply to a Restriction Requirement mailed May 3, 2006. The Office Action set a one (1) month shortened statutory period for reply. No timely extensions of time were obtained under the provisions of 37 CFR 1.136(a). Accordingly, this application became abandoned on June 4, 2006. A Notice of Abandonment was mailed on January 25, 2007.

It is not apparent whether the person signing the statement of unintentional delay was in a position to have firsthand or direct knowledge of the facts and circumstances of the delay at issue. Nevertheless, such statement is being treated as having been made as the result of a reasonable inquiry into the facts and circumstances of such delay. See 37 CFR 10.18(b). In the event that such an inquiry has not been made, petitioner must make such an inquiry. If such inquiry results in the discovery that it is not correct that the entire delay in filing the required reply from the due date for the reply until the filing of a grantable petition pursuant to 37 CFR 1.137(b) was unintentional, petitioner must notify the Office.

This petition is hereby **GRANTED**.

A four (4) month extension of time was requested with the instant petition. However, pursuant to 37 CFR 1.136 (a), an extension of time must be filed prior to the expiration of the maximum extendable period for reply. See In re Application of S., 8 USPQ2d

1630, 1631 (Comm'r Pats. 1988) Petitioner is ineligible for any extensions of time, nor is an extension of time fee required to revive the application. Accordingly, $1,590.00 will be credited to deposit account no. 50-0988 .

The power of attorney and change of address has been entered and made of record.

The Office hereby acknowledges the receipt of the Response to the Restriction Requirement submitted with the instant petition.

This application is being referred to Art Unit 2614 for further processing.

Telephone inquiries concerning this matter should be directed to the undersigned at (571) 272-3215.

Charlema R. Grant

Charlema R. Grant
Petitions Attorney
Office of Petitions

UNITED STATES PATENT AND TRADEMARK OFFICE

Commissioner for Patents
United States Patent and Trademark Office
P.O. Box 1450
Alexandria, VA 22313-1450
www.uspto.gov

HOWARD M. PETERS
PETERS VERNY JONES & SCHMITT
SUITE 230
425 SHERMAN AVENUE
PALO ALTO, CA 94306

COPY MAILED

JUN 0 7 2006

OFFICE OF PETITIONS

In re Application of :
Bernard D. Santarsiero et al :
Application No. 10/323,319 : DECISION ON PETITION
Filed: December 18, 2002 : TO WITHDRAW
Attorney Docket No. 2960.54-9 : FROM RECORD
:

This is a decision on the Request to Withdraw as attorney or agent of record under 37 C.F.R. § 1.36(b), filed March 10, 2006.

The request is **NOT APPROVED**.

A grantable request to withdraw as attorney/agent of record must be signed by every attorney/agent seeking to withdraw or contain a clear indication that one attorney is signing on behalf of another/others. A request to withdraw will not be approved unless at least 30 (thirty) days would remain between the date of approval and the later of the expiration date of a time to file a response or the expiration date of the maximum time period which can be extended under 37 C.F.R. § 1.136(a).

The request cannot be approved because no reasons for withdrawal have been provided. The Office cannot, at this time, determine whether practitioner's request is one of the mandatory or permissive reasons enumerated in 37 CFR 10.40. Any subsequent requests must include reasons for withdrawal. Please note that there is a space provided for on PTO/SB/83 (Request to Withdraw as Attorney or Agent) to supply practitioner's reasons.

All future communications from the Office will continue to be directed to the above-listed address until otherwise notified by applicants.

Telephone inquires concerning this decision should be directed to Wan Laymon at 571-272-3220.

This application is being referred to Technology Center AU 1743.

Amelia Au
Petitions Examiner
Office of Petitions

cc: JOHN A. BAUER
FULBRIGHT & JAWORSKI
666 FIFTH AVENUE
NEW YORK, NY 10103

UNITED STATES PATENT AND TRADEMARK OFFICE

COMMISSIONER FOR PATENTS
UNITED STATES PATENT AND TRADEMARK OFFICE
P.O. BOX 1450
ALEXANDRIA, VA 22313-1450
www.uspto.gov

COPY MAILED

MAR 19 2007

OFFICE OF PETITIONS

Genencor International, Inc.
925 Page Mill Road
Palo Alto CA 94034-1013

In re Application of :
Graycar, et al. : DECISION ON PETITION
Application No. 10/323,324 :
Filed: December 18, 2002 :
Atty. Dkt. No.: GC235-2C1 :

The above-identified application has been forwarded to the Office of Petitions for consideration of the petition to withdraw the holding of abandonment under 37 CFR 1.181 filed February 7, 2007.

The petition under 37 CFR 1.181 to withdraw the holding of abandonment is hereby **DISMISSED**.

Any request for reconsideration of this decision must be submitted within **TWO (2) MONTHS** from mail date of this decision. Extensions of time under 37 CFR 1.136(a) are permitted. The reconsideration request should include a cover letter entitled "Renewed Petition under 37 CFR 1.181." This is not a final agency decision.

This application became abandoned for failure to timely submit a proper reply to the Notice of Allowance (Notice) mailed August 18, 2006. The Office communication set a one month non-extendible period of time for reply. Notice of Abandonment was mailed December 14, 2006.

Petitioners allege that a proper reply (issue fee payment) was timely submitted September 18, 2006. Specifically, petitioners allege that the Office was expressly authorized to charge the required issue fee payment to petitioner's deposit account.

Petitioners' arguments have been considered, but are not convincing. On September 19, 2006, Deposit Account 07-1048 had a balance of $96.64. Hence, there were insufficient funds available at that time to cover the required fees.

ALTERNATE VENUE

Petitioners may wish to consider filing a petition stating that the delay was unintentional. Petitioners' attention is directed to 37 CFR 1.137(b) which provides for the revival of an "unintentionally" abandoned application without a showing that the delay in prosecution or in late payment of an issue fee was "unavoidable." An "unintentional" petition under 37 CFR 1.137(b) must be accompanied by the required petition fee and reply.

The filing of a petition under 37 CFR 1.137(b) cannot be intentionally delayed and therefore must be filed promptly. A person seeking revival due to unintentional delay cannot make a statement that the delay was unintentional unless the entire delay, including the delay from the date it was discovered that the application was abandoned until the filing of the petition to revive under 37 CFR 1.137(b), was unintentional. A statement that the delay was unintentional is not appropriate if petitioner intentionally delayed the filing of a petition for revival under 37 CFR 1.137(b).

Further correspondence with respect to this matter should be addressed as follows:

By mail:	**Mail Stop Petition** Commissioner for Patents P.O. Box 1450 Alexandria, VA 22313-1450
By facsimile:	(571) 273-8300
By hand delivery:	U.S. Patent and Trademark Office Customer Window, **Mail Stop Petition** Randolph Building 401 Dulany Street Alexandria, VA 22314

Telephone inquiries concerning this matter may be directed to the undersigned at (571) 272-3205.

Alesia M. Brown
Petitions Attorney
Office of Petitions

UNITED STATES PATENT AND TRADEMARK OFFICE

COMMISSIONER FOR PATENTS
UNITED STATES PATENT AND TRADEMARK OFFICE
P.O. BOX 1450
ALEXANDRIA, VA 22313-1450
www.uspto.gov

COPY MAILED

JUN 21 2007

OFFICE OF PETITIONS

Genencor International, Inc.
925 Page Mill Road
Palo Alto CA 94034-1013

In re Application of :
Graycar, et al. : DECISION ON PETITION
Application No. 10/323,324 :
Filed: December 18, 2002 :
Atty. Dkt. No.: GC235-2C1 :

This decision is in response to the petition renewed under 37 CFR 1.137(b) filed April 25, 2007.

The petition is **GRANTED**.

This application became abandoned for failure to timely submit a proper reply to the Notice of Allowance (Notice) mailed October 11, 2006. The Office communication set a one month non-extendible period of time for reply. Notice of Abandonment was mailed December 14, 2006.

A grantable petition pursuant to 37 C.F.R. § 1.137(b) must be accompanied by: (1) the required reply to the outstanding Office action or notice, unless previously filed; (2) the petition fee as set forth in 37 C.F.R. § 1.17(m); (3) a statement that the entire delay in filing the required reply from the due date for the reply until the filing of a grantable petition pursuant to 37 C.F.R. § 1.137(b) was unintentional; and (4) any terminal disclaimer (and fee set forth in 37 C.F.R. § 1.20(d)) required pursuant to 37 C.F.R. § 1.137(c).

The instant petition has been reviewed and found in compliance with the provisions of 37 CFR 1.137(b). Accordingly, the delay in timely submission of a proper reply to the Notice is deemed unintentional. The required petition fee, issue fee, and publication fee have been charged to petitioners' deposit account as authorized.

This application is being forwarded to the Office of Patent Publication for further processing.

Telephone inquiries concerning this matter may be directed to the undersigned at (571) 272-3205.

Alesia M. Brown
Petitions Attorney
Office of Petitions

UNITED STATES PATENT AND TRADEMARK OFFICE

Commissioner for Patents
United States Patent and Trademark Office
P.O. Box 1450
Alexandria, VA 22313-1450
www.uspto.gov

SEYFARTH SHAW LLP
131 S. DEARBORN ST., SUITE 2400
CHICAGO, IL 60603-5803

COPY MAILED

FEB 0 6 2008

OFFICE OF PETITIONS

In re Application of
Hiroshi Kishimoto
Application No. 10/323,331
Filed: December 18, 2002
Attorney Docket No. TJK/315

ON PETITION

This is a decision on the petition under 37 CFR 1.137(b), filed October 12, 2007, to revive the above-identified application.

The petition is **GRANTED**.

The application became abandoned for failure to timely file a reply within the meaning of 37 CFR 1.113 to an Office action mailed March 16, 2007. A Notice of Abandonment was mailed on October 12, 2007.

The proposed reply required for consideration of a petition to revive must be a Notice of Appeal (and appeal fee required by 37 CFR 41.20(b)(2), an amendment that *prima facie* places the application in condition for allowance, a Request for Continued Examination and submission (37 CFR 1.114), or the filing of a continuing application under 37 CFR 1.53(b). See MPEP 711.03(c)(II)(A)(2).

The petition satisfies the requirements of 37 CFR 1.137(b) in that petitioner has supplied (1) the reply in the form of a Request for Continued Examination (RCE), including the fee of $810 and the submission required by 37 CFR 1.114; (2) the petition fee of $1,540; and (3) an adequate statement of unintentional delay.

This application is being referred to Technology Center AU 1791 for processing of the RCE and for appropriate action by the Examiner in the normal course of business on the amendment submitted in accordance with 37 CFR 1.114.

Telephone inquiries concerning this decision should be directed to the undersigned at (571) 272-3204. Inquiries relating to further prosecution should be directed to the Technology Center.

Sherry D. Brinkley
Petitions Examiner
Office of Petitions

UNITED STATES PATENT AND TRADEMARK OFFICE

Commissioner for Patents
United States Patent and Trademark Office
P.O. Box 1450
Alexandria, VA 22313-1450
www.uspto.gov

HOWARD M. PETERS
PETERS VERNY JONES & SCHMITT
SUITE 230
425 SHERMAN AVENUE
PALO ALTO, CA 94306

COPY MAILED

JUN 07 2006

OFFICE OF PETITIONS

In re Application of :
Bernard D. Santarsiero et al :
Application No. 10/323,378 : DECISION ON PETITION
Filed: December 18, 2002 : TO WITHDRAW
Attorney Docket No. 2960.54-10 : FROM RECORD
:

This is a decision on the Request to Withdraw as attorney or agent of record under 37 C.F.R. § 1.36(b), filed March 10, 2006.

The request is **NOT APPROVED**.

A grantable request to withdraw as attorney/agent of record must be signed by every attorney/agent seeking to withdraw or contain a clear indication that one attorney is signing on behalf of another/others. A request to withdraw will not be approved unless at least 30 (thirty) days would remain between the date of approval and the later of the expiration date of a time to file a response or the expiration date of the maximum time period which can be extended under 37 C.F.R. § 1.136(a).

The request cannot be approved because no reasons for withdrawal have been provided. The Office cannot, at this time, determine whether practitioner's request is one of the mandatory or permissive reasons enumerated in 37 CFR 10.40. Any subsequent requests must include reasons for withdrawal. Please note that there is a space provided for on PTO/SB/83 (Request to Withdraw as Attorney or Agent) to supply practitioner's reasons.

All future communications from the Office will continue to be directed to the above-listed address until otherwise notified by applicants.

Telephone inquires concerning this decision should be directed to Wan Laymon at 571-272-3220.

This application is being referred to Technology Center AU 1743 to await a reply to the non-final Office action mailed February 28, 2006.

Denise Pothier
Petitions Examiner
Office of Petitions

cc: JOHN A. BAUER
FULBRIGHT & JAWORSKI
666 FIFTH AVENUE
NEW YORK, NY 10103

UNITED STATES PATENT AND TRADEMARK OFFICE

COMMISSIONER FOR PATENTS
UNITED STATES PATENT AND TRADEMARK OFFICE
P.O. BOX 1450
ALEXANDRIA, VA 22313-1450
www.uspto.gov

Paper No. 5

COPY MAILED
DEC 17 2003
OFFICE OF PETITIONS

SMITH-HILL AND BEDELL
12670 N W BARNES ROAD
SUITE 104
PORTLAND OR 97229

In re Application of
Pinhong Chen and Cin-Chi Teng
Application No. 10/323,399
Filed: December 18, 2002
Attorney Docket No. SILI 2373
Title: METHOD OF ESTIMATING PATH DELAYS IN AN IC

DECISION ON PETITION
UNDER 37 C.F.R. §1.137(f)

This is a decision on the petition filed on June 4, 2003, pursuant to 37 C.F.R. §1.137(f), to revive the above-identified application.

A grantable petition pursuant to 37 CFR 1.137(f) must be accompanied by:

(1) Notification of the filing of an application in a foreign country or under a multinational treaty that requires 18 month publication[1];
(2) The petition fee as set forth in 37 C.F.R. § 1.17(m), and;
(3) A statement that the entire delay in filing the notice from the date that the notice was due under 35 U.S.C. §122(b)(2)(B)(iii) until the date the notice was filed was unintentional. The Commissioner may require additional information where there is a question whether the delay was unintentional.

On February 7, 2003, a Notice of Rescission of Nonpublication Request was filed with the Office. Unfortunately, notification of the filing of the international application did not accompany this filing.

1 See PTO/SB/36 and paragraph on PTO/SB/64a for further information. Both may be downloaded at http://www.uspto.gov/web/forms/index.html.

Petitioner states that the instant nonprovisional application is the subject of an application filed in an international application on January 31, 2003. However, the United States Patent and Trademark Office was unintentionally not notified of this filing within 45 days subsequent to the filing of the subject application in a foreign country.

In view of the above, this application became abandoned pursuant to 35 U.S.C. §1.22(b)(2)(B)(iii) and 37 C.F.R. §1.213(c) for failure to timely notify the Office of the filing of an application under a multilateral international agreement, that requires publication of applications 18 months after filing.

The petition is **GRANTED-IN-PART**.

The portions of the petition which request that the Notice of Rescission of Nonpublication Request be treated as adequate notification of a multinational filing is **DISMISSED**, for the reasons set forth below.

In making this request, the petitioner advances the following seven arguments:

1. Prior to April 11, 2003, "the Office viewed the official form then in effect for rescinding a nonpublication request (Form PTO-SB/38)...to be an adequate notification of foreign filing..."

2. "Form PTO-SB/38...makes no reference...to 35 U.S.C. 122(b)(2)(B)(iii) or 37 C.F.R. 1.213(c)".

3. "The signature line on form PTO-SB/36"...."is above the note that refers to 35 U.S.C 122(b)(2)(B)(iii) and 37 C.F.R. §1.213(c), and therefore, the note, as such, is not signed".

4. Petitioner's "confusion over the requirements of 35 U.S.C. 122(b)(2)(B) and 37 C.F.R. §1.213 should be excused", and the notice of rescission should be accepted as a notification under 35 U.S.C. §122(b)(2)(B)(iii), because "it was reasonable to have viewed the notice of rescission as canceling or abrogating the previous nonpublication request."

5. A Notice of either a foreign filing or a multinational application "serves no purpose that is not served by the notice of rescission."

6. "Confusion on the part of Office personnel can be inferred from the changes that were made to form PTO/SB/38", and "the Office was uncertain whether the unsigned note on Form PTO/SB/38...was an adequate notification under 35 U.S.C. 122(b)(2)(B)(iii)".

7. The international application, was filed with the United States Patent and Trademark Office as the receiving Office, referenced the instant U.S. application by application number and filing date. Therefore, the "act of filing the International application therefore notified the Director of the filing of the International application not later than 45 days after filing of the International application."

The first argument above this argument is both incorrect and irrelevant. It is incorrect in that a Rescinding of the Nonpublication Request is not, and never was considered to be a notice of a foreign or multinational filing. It is irrelevant due to the fact that the petitioner's Notice of Rescission on Nonpublication Request was not submitted via the official PTO form, but rather via a type-written letter.

Regarding arguments two through five above, the abandonment did not stem from the PTO's failure to reference a particular law or regulation on a form, or the placement of the relevant regulation and law; the application went abandoned as a direct result of petitioner's failure to be aware of and/or fully and correctly comprehend the relevant laws and regulations. As a registered member of the patent bar, petitioner is expected to know the relevant laws and regulations pertaining to his practice and under which this Office operates, and he is charged with the responsibility of keeping himself up to date with any changes in these matters.

Regarding the sixth argument above, petitioner's inference is incorrect. Forms are changed and Notices are published in the Official Gazette merely as a courtesy for applicants and practitioners.

Regarding the seventh argument above, in light of 37 C.F.R. §§1.4(b) - (c), it was not reasonable for petitioner to have expected the papers in the PCT file to have been matched with those of the instant application, and therefore have proper notice provided for. As is clearly set forth in the former, "a separate copy of every paper to be filed in a patent ...application ... must be furnished for each file to which the paper pertains."

As such, the request to have the Rescission treated as adequate notice is **DISMISSED**.

Concerning the petition under 37 C.F.R. §1.137(f), the petition is **GRANTED**.

Petitioner has submitted the notification of an international filing, paid the petition fee (which has been charged to petitioner's Deposit Account, as authorized in the petition), and has made the proper statement of unintentional delay.

The instant petition has been found to be in compliance with 37 C.F.R. §1.137(f). Accordingly, the failure to timely notify the Office of a foreign or international filing within 45 days after the date of filing of such foreign or international application as provided by 35 U.S.C. §122(b)(2)(B)(iii) and 37 C.F.R. §1.213(c) is accepted as having been unintentionally delayed.

After this decision is mailed, the application will be forwarded to Technology Center 2800 for further processing.

Telephone inquiries concerning *this decision* should be directed to the undersigned at (703) 305-0011.

Paul Shanoski
Attorney
Office of Petitions
United States Patent and Trademark Office

Attorney's Docket No.: 14411-003001

IN THE UNITED STATES PATENT AND TRADEMARK OFFICE

Applicant : Separation Engineers
Serial No. : 10/323,437
Filed : December 18, 2002
Title : SEPARATION PROCESSES AND APPARATUS

Art Unit : 1723
Examiner : Unknown

Attention: Group Director
Commissioner for Patents
P.O. Box 1450
Alexandria, VA 22313-1450

REQUEST FOR PERMISSION TO WITHDRAW AS ATTORNEY OF RECORD

The undersigned attorney, on behalf of himself and the other attorneys of record, who are members or associates in the firm of FISH & RICHARDSON P.C., or who were so listed at the time of their appointment, and on behalf of any associate attorneys appointed by any of the attorneys on whose behalf this petition is filed, including the following: Spencer C. Patterson, J. Kevin Gray, William R. Borchers, and Neil J. McNabnay, requests the approval of the Commissioner to withdraw as attorney(s)/agent(s) of record.

The present mailing address of the attorney(s)/agent(s) of record is:

26231
FISH & RICHARDSON P.C.
60 South Sixth Street
3300 Dain Rauscher Plaza
Minneapolis, MN 55402

Approved
Jacqueline M. Stone, Director
Technology Center 1700
MAR 15 2004

The present mailing address of the applicant is:

SEPARATION ENGINEERS, INC.
13003 Murphy Road, Suite M-10
Stafford, Texas 77477

CERTIFICATE OF TRANSMISSION BY FACSIMILE

I hereby certify that this correspondence is being transmitted by facsimile to the Patent and Trademark Office on the date indicated below.

07/23/2003
Date of Transmission

Peggy C. Gray
Signature

Peggy C. Gray
Typed or Printed Name of Person Signing Certificate

Received from < 214 747 2094 > at 9/29/03 12:28:08 PM [Eastern Daylight Time]

Applicant : Separation Engineers
Serial No. : 10/323,437
Filed : December 18, 2002
Page : 2 of 2

Attorney's Docket No.: 14411-003001

The reasons for which the permission of the Commissioner is sought for withdrawal of the attorney(s)/agent(s) of record is the failure of the applicant or owner to pay the attorney's bills after due notification and the elapse of a substantial period of time. The applicant has been given at least 120 days from the billing date to pay bills for services due and has been provided with regular notification of the delinquent sums.

Notice of the attorney's request to withdraw is being sent simultaneously to the applicant and the relevant papers and files will immediately be sent to the applicant upon approval of the request by the Commissioner.

At least thirty days remain for the applicant to take any action due in this case or an appropriate request for extension of time accompanies this request seeking additional time. The attorney(s)/agent(s) on whose behalf this petition is filed will ensure that the applicant has sufficient time after approval of this request to reply or employ another to reply to any outstanding requirement of the Patent and Trademark Office.

Two copies of this request are filed herewith. The Commissioner is authorized to apply any charges or credits to Deposit Account No. 06-1050.

Respectfully submitted,

Date: 7/23/03

Spencer C. Patterson
Reg. No. 43,849

Fish & Richardson P.C.
60 South Sixth Street
3300 Dain Rauscher Plaza
Minneapolis, MN 55402
Telephone: (214) 292-4082
Facsimile: (214) 747-2091

RECEIVED
CENTRAL FAX CENTER
SEP 29 2003

OFFICIAL

90045458.doc

Received from < 214 747 2094 > at 9/29/03 12:28:08 PM [Eastern Daylight Time]

Attorney's Docket No.: 14411-003001

OFFICIAL COMMUNICATION

FACSIMILE

FOR THE PERSONAL ATTENTION OF:

EXAMINER

RECEIVED
CENTRAL FAX CENTER
SEP 29 2003
OFFICIAL

FAX NO: 703-872-9306

Number of pages including this page 5

Applicant : Separation Engineers
Serial No. : 10/323,437
Filed : December 18, 2002

Art Unit : 1723
Examiner : Peter A. Hruskoci

FACSIMILE COMMUNICATION

Title : Separation Processes and Apparatus

Commissioner for Patents
P.O. Box 1450
Alexandria, VA 22313-1450

Sir:

Attached to this facsimile communication cover sheet is an informal resubmission of a Request for Permission to Withdraw as Attorney of Record which was originally faxed to Group 1723, the United States Patent and Trademark office on July 23, 2003.

Respectfully submitted,

Date:September 29, 2003

Spencer C. Patterson
Reg. No. 43,849

Fish & Richardson P.C.
5000 Bank One Center
1717 Main Street
Dallas, Texas 75201
Telephone: (214) 292-4082
Fascimile: (214) 747-2091

90053417.doc

NOTE: This facsimile is intended for the addressee only and may contain privileged or confidential information. If you have received this facsimile in error, please immediately call us collect at to arrange for its return. Thank you.

Pet. Dec.

Attorney's Docket No.: 14411-003001

IN THE UNITED STATES PATENT AND TRADEMARK OFFICE

Applicant : Separation Engineers
Serial No. : 10/323,437
Filed : December 18, 2002
Title : SEPARATION PROCESSES AND APPARATUS

Art Unit : 1723
Examiner : Unknown

FAX RECEIVED
JUL 24 2003
GROUP 1700

Attention: Group Director
Commissioner for Patents
P.O. Box 1450
Alexandria, VA 22313-1450

REQUEST FOR PERMISSION TO WITHDRAW AS ATTORNEY OF RECORD

The undersigned attorney, on behalf of himself and the other attorneys of record, who are members or associates in the firm of FISH & RICHARDSON P.C., or who were so listed at the time of their appointment, and on behalf of any associate attorneys appointed by any of the attorneys on whose behalf this petition is filed, including the following: Spencer C. Patterson, J. Kevin Gray, William R. Borchers, and Neil J. McNabnay, requests the approval of the Commissioner to withdraw as attorney(s)/agent(s) of record.

The present mailing address of the attorney(s)/agent(s) of record is:

26231
FISH & RICHARDSON P.C.
60 South Sixth Street
3300 Dain Rauscher Plaza
Minneapolis, MN 55402

Approved
JMStone
Jacqueline M. Stone, Director
Technology Center 1700
JUN 29 2004

The present mailing address of the applicant is:

SEPARATION ENGINEERS, INC.
13003 Murphy Road, Suite M-10
Stafford, Texas 77477

CERTIFICATE OF TRANSMISSION BY FACSIMILE

I hereby certify that this correspondence is being transmitted by facsimile to the Patent and Trademark Office on the date indicated below.

07/23/2003
Date of Transmission

Peggy C. Gray
Signature

Peggy C. Gray
Typed or Printed Name of Person Signing Certificate

Received from < 214 747 2094 > at 7/23/03 2:18:49 PM [Eastern Daylight Time]

Applicant : Separation Engineers
Serial No. : 10/323,437
Filed : December 18, 2002
Page : 2 of 2

Attorney's Docket No.: 14411-003001

The reasons for which the permission of the Commissioner is sought for withdrawal of the attorney(s)/agent(s) of record is the failure of the applicant or owner to pay the attorney's bills after due notification and the elapse of a substantial period of time. The applicant has been given at least 120 days from the billing date to pay bills for services due and has been provided with regular notification of the delinquent sums.

Notice of the attorney's request to withdraw is being sent simultaneously to the applicant and the relevant papers and files will immediately be sent to the applicant upon approval of the request by the Commissioner.

At least thirty days remain for the applicant to take any action due in this case or an appropriate request for extension of time accompanies this request seeking additional time. The attorney(s)/agent(s) on whose behalf this petition is filed will ensure that the applicant has sufficient time after approval of this request to reply or employ another to reply to any outstanding requirement of the Patent and Trademark Office.

Two copies of this request are filed herewith. The Commissioner is authorized to apply any charges or credits to Deposit Account No. 06-1050.

Respectfully submitted,

Date: 7/23/03

Spencer C. Patterson
Reg. No. 43,849

FAX RECEIVED
JUL 24 2003
GROUP 1700

Fish & Richardson P.C.
60 South Sixth Street
3300 Dain Rauscher Plaza
Minneapolis, MN 55402
Telephone: (214) 292-4082
Facsimile: (214) 747-2091

90045458.doc

Received from < 214 747 2094 > at 7/23/03 2:18:49 PM [Eastern Daylight Time]

OFFICIAL

Attorney's Docket No.: 14411-003001

OFFICIAL COMMUNICATION

FACSIMILE

FOR THE PERSONAL ATTENTION OF:

EXAMINER

GROUP 1723 FAX NO: 703-872-9310

Number of pages including this page 3

FAX RECEIVED
JUL 24 2003
GROUP 1700

Applicant : Separation Engineers
Serial No. : 10/323,437
Filed : December 18, 2002

Art Unit : 1723
Examiner : Unknown

FACSIMILE COMMUNICATION

Title : Separation Processes and Apparatus

Commissioner for Patents
P.O. Box 1450
Alexandria, VA 22313-1450

Sir:

Attached to this facsimile communication cover sheet is a Request for Permission to Withdraw as Attorney of Record, faxed this 23rd day of July, 2003, to Group 1723, the United States Patent and Trademark Office.

Respectfully submitted,

Date:July 23, 2003

Spencer C. Patterson
Reg. No. 43,849

Fish & Richardson P.C.
60 South Sixth Street
3300 Dain Rauscher Plaza
Minneapolis, MN 55402
Telephone: (214) 292-4082
Facsimile: (214) 747-2091

90046871.doc

NOTE: This facsimile is intended for the addressee only and may contain privileged or confidential information. If you have received this facsimile in error, please immediately call us collect at to arrange for its return. Thank you.

Received from < 214 747 2094 > at 7/23/03 2:18:49 PM [Eastern Daylight Time]

UNITED STATES PATENT AND TRADEMARK OFFICE

Commissioner for Patents
United States Patent and Trademark Office
P.O. Box 1450
Alexandria, VA 22313-1450
www.uspto.gov

PHILIPS INTELLECTUAL PROPERTY & STANDARDS
P.O. BOX 3001
BRIARCLIFF MANOR, NY 10510

COPY MAILED

JUL 27 2005

OFFICE OF PETITIONS

In re Application of :
Peng Xu et al :
Application No. 10/323,445 : DECISION GRANTING PETITION
Filed: December 19, 2002 : UNDER 37 CFR 1.137(b)
Attorney Docket No. US020607 :

This is a decision on the petition under 37 CFR 1.137(b), filed May 9, 2005, to revive the above-identified application.

The petition is **GRANTED**.

The petition satisfies the conditions for revival pursuant to the provisions of 37 CFR 1.137(b) in that (1) the reply in the form of an amendment; (2) the petition fee; and (3) the required statement of unintentional delay have been received. Accordingly, the reply to the nonfinal Office action of July 15, 2004, is accepted as having been unintentionally delayed.

There is no indication that the person signing the instant petition was ever given a power of attorney or authorization of agent to prosecute the above-identified application. If the person signing the instant petition desires to receive future correspondence regarding this application, the appropriate power of attorney or authorization of agent must be submitted. While a courtesy copy of this decision is being mailed to the person signing the instant petition, all future correspondence will be directed to the address currently of record until such time as appropriate instructions are received to the contrary.

Telephone inquiries concerning this decision should be directed to the undersigned at (571) 272-3208.

This matter is being referred to Technology Center AU 2816.

Karen Creasy

Karen Creasy
Petitions Examiner
Office of Petitions
Office of the Deputy Commissioner
for Patent Examination Policy

cc:
WILLIAM A.MUNCK
900, THREE GALLERIA TOWER,
13155 NOEL ROAD
DALLAS TX 75240

UNITED STATES PATENT AND TRADEMARK OFFICE

Commissioner for Patents
United States Patent and Trademark Office
P. O. Box 1450
Alexandria, VA 22313-1450
www. uspto. gov

COPY MAILED

FEB 1 0 2005

OFFICE OF PETITIONS

INVISTA NORTH AMERICA S.A.R.L.
4417 LANCASTER PIKE
CRP 722/1032
WILMINGTON, DE 19805

In re Application of	:	
Anteneh Zewde et al	:	
Application No. 10/323,451	:	ON PETITION
Filed: December 19, 2002	:	
Attorney Docket No. RD8370 US NA	:	

This is a decision on the petition under 37 CFR 1.137(b), filed January 25, 2005, to revive the above-identified application.

The petition is **GRANTED**.

The above-identified application became abandoned for failure submit the Issue fee in a timely manner in reply to the Notice of Allowance mailed October 4, 2004, which set a statutory period for reply of three (3) months. Accordingly, the above-identified application became abandoned on January 5, 2005.

Telephone inquiries concerning this decision should be directed to Irvin Dingle at (571) 272-3210.

This matter is being forwarded to the Publishing Division.

Irvin Dingle
Petitions Examiner
Office of Petitions
Office of the Deputy Commissioner
for Patent Examination Policy

cc:

Myron Keith Wyche
Connolly Bove Lodge & Hutz LLP
1990 M Street, N.W., Suite 800
Washington, DC 20036-3425

UNITED STATES PATENT AND TRADEMARK OFFICE

COMMISSIONER FOR PATENTS
UNITED STATES PATENT AND TRADEMARK OFFICE
P.O. BOX 1450
ALEXANDRIA, VA 22313-1450
www.uspto.gov

Paper No.

John M. Vasuta
Chief I.P. Counsel
Bridgetstone/Firestone Americas Holding, Inc.
1200 Firestone Parkway
Akron OH 44317

COPY MAILED

MAR 0 6 2007

OFFICE OF PETITIONS

In re Application of	:	
Hergenrother et al.	:	
Application No. 10/323,458	:	ON PETITION
Filed: December 18, 2002	:	
Attorney Docket No. P02016US1ABFNT	:	
(FIR.P319)	:	

This is a decision on the "PETITION FILED UNDER 37 C.F.R. § 1.182" filed December 11, 2006, requesting that the terminal disclaimer filed in the instant application on April 19, 2006 to obviate a double patenting rejection with application number 11/029,854 be withdrawn.

The petition is **GRANTED**.

The terminal disclaimer filed on April 19, 2006, is hereby **WITHDRAWN**.

Petitioner argues, in essence, that the terminal disclaimer is unnecessary as application No. 11/029,854 was expressly abandoned (on June 26, 2006). The examiner has concurred with petitioner's assertion. It should be noted that this decision is not a determination that the subject matter of the current claims is distinct from the claims in the patents and/or applications to which the terminal disclaimer applied.

A Notice of Allowance has been issued in this application and the issue fee has been paid. The Office of Patent Publication has been advised of this decision. The application has,

thereby, been forwarded to Publications for correction of PALM and file records consistent with this decision.

Telephone inquiries concerning this decision may be directed to the undersigned at 571-272-3219.

Nancy Johnson
Senior Petitions Attorney
Office of Petitions

UNITED STATES PATENT AND TRADEMARK OFFICE

Commissioner for Patents
United States Patent and Trademark Office
P.O. Box 1450
Alexandria, VA 22313-1450
www.uspto.gov

BOZICEVIC, FIELD & FRANCIS LLP
1900 UNIVERSITY AVENUE
SUITE 200
EAST PALO ALTO CA 94303

COPY MAILED

DEC 0 1 2009

OFFICE OF PETITIONS

In re Patent No. 7,232,685 :
Application No. 10/323,463 :
Filed: December 18, 2002 : ON PETITION
Issued: June 19, 2007 :
Attorney Docket No. GLAD-261 :

This is a decision on the petition filed October 6, 2009, which is being treated as a request under 37 CFR 3.81(b)[1] to correct the name of the assignee on the front page of the above-identified patent by way of a Certificate of Correction.

The request is **GRANTED**.

Petitioner wishes to correct the name of the assignee to "The J. David Gladstone Institutes." Petitioner argues that "It is believed that no fee is due since the error was made by the Patent and Trademark Office." However, 37 CFR 3.81 is applicable since the originally filed PTOL-85 Transmittal form submitted and signed by Paula A. Borden on May 9, 2007 clearly shows on the Part B - Fee(s) Transmittal form at the time of payment of the issue fee the assignee as "The Regents of the University of California."

37 CFR 3.81(b), effective June 25, 2004, reads:

> *After payment of the issue fee:* Any request for issuance of an application in the name of the assignee submitted after the date of payment of the issue fee, and any request for a patent to be corrected to state the name of the assignee, must state that the assignment was submitted for recordation as set forth in § 3.11 before issuance of the patent, and must include a request for a certificate of correction under § 1.323 of this chapter (accompanied by the fee set forth in § 1.20(a)) and the processing fee set forth in § 1.17(i) of this chapter.

[1] *See* MPEP 1309, subsection II; and Official Gazette of June 22, 2004.

The $130.00 processing fee will be charged to petitioner's deposit account as authorized October 6, 2009.

This matter is being referred to the Certificates of Correction Branch for issuance of the requested Certificate of Correction.

Telephone inquiries concerning this decision may be directed to Joan Olszewski at (571) 272-7751. Inquiries regarding the certificate of correction should be directed to the Certificate of Correction Branch at (571) 272-4200.

/Liana Walsh/
Liana Walsh
Petitions Examiner
Office of Petitions

UNITED STATES PATENT AND TRADEMARK OFFICE

Commissioner for Patents
United States Patent and Trademark Office
P. O. Box 1450
Alexandria, VA 22313-1450
www.uspto.gov

TOWNSEND AND TOWNSEND AND CREW LLP
TWO EMBARCADERO CENTER, 8TH FLOOR
SAN FRANCISCO, CA 94111-3834

COPY MAILED

SEP 2 6 2003

OFFICE OF PETITIONS

In re Application of :
David H. Chambers :
Application No. 10/323,467 : NOTICE
Filed: December 18, 2002 :
Attorney Docket No. 020222-000900US

This is a notice regarding your request for acceptance of a fee deficiency submission under 37 CFR 1.28. On September 1, 1998, the Court of Appeals for the Federal Circuit held that 37 CFR 1.28(c) is the sole provision governing the time for correction of the erroneous payment of the issue fee as a small entity. **See DH Technology v. Synergystex International, Inc. 154 F.3d 1333, 47 USPQ2d 1865 (Fed. Cir. Sept. 1, 1998).**

The Office no longer investigates or rejects original or reissue applications under 37 CFR 1.56. **1098 Off. Gaz. Pat. Office 502 (January 3, 1989)**. Therefore, nothing in this Notice is intended to imply that an investigation was done.

Your fee deficiency submission under 37 CFR 1.28 is hereby **ACCEPTED**.

Inquiries related to this communication should be directed to the Office of Petitions Staff at (703) 305-9285.

This file is being forwarded to Technology Center 3700.

Irvin Dingle
Petitions Examiner
Office of Petitions
Office of the Deputy Commissioner
for Patent Examination Policy

UNITED STATES PATENT AND TRADEMARK OFFICE

Commissioner for Patents
United States Patent and Trademark Office
P.O. Box 1450
Alexandria, VA 22313-1450
www.uspto.gov

GENE SCOTT; PATENT LAW & VENTURE GROUP
3140 RED HILL AVENUE
SUITE 150
COSTA MESA CA 92626-3440

COPY MAILED

JAN 17 2006

OFFICE OF PETITIONS

In re Application of :
Lisenbee et al. : DECISION ON PETITION
Application No. 10/323,482 : UNDER 37 CFR 1.137(b)
Filed: December 18, 2002 :
Attorney Docket No. Weiss. T-15 :

This is a decision on the petition under 37 CFR 1.137(b), filed October 13, 2005, to revive the above-identified application.

This application became abandoned for failure to reply timely to the nonfinal Office Action mailed November 17, 2004, which set a three (3) month shortened statutory period to reply. Accordingly, this application became abandoned on February 18, 2005. A Notice of Abandonment was mailed on July 5, 2005.

Petitioner has met the requirements to revive the above-identified application pursuant to 37 CFR 1.137(b). Petitioner submitted the required reply in the form of an amendment, paid the petition fee, and made the proper statement of unintentional delay. Accordingly, the petition is **granted.**

This matter is being referred to Technology Center Art Unit 3727.

All inquiries concerning either the examination procedures or status of the application should be directed to the Technology Center. Telephone inquiries specific to this decision should be directed to the undersigned at (571) 272-3211.

Christina Tartera Donnell

Christina Tartera Donnell
Senior Petitions Attorney
Office of Petitions

UNITED STATES PATENT AND TRADEMARK OFFICE

Commissioner for Patents
United States Patent and Trademark Office
P.O. Box 1450
Alexandria, VA 22313-1450
www.uspto.gov

INTEL/BSTZ
BLAKELY SOKOLOFF TAYLOR & ZAFMAN LLP
1279 OAKMEAD PARKWAY
SUNNYVALE, CA 94085-4040

COPY MAILED

AUG 13 2008

In re Application of :
Farid Adrangi, et. al :
Application No. 10/323,486 : DECISION ON PETITION
Filed: December 18, 2002 :
Attorney Docket No. 042390.P15207 :

This is a decision on the petition under the unintentional provisions of 37 CFR 1.137(b), filed July 18, 2008, to revive the above-identified application.

The petition is **GRANTED**.

This application became abandoned for failure to timely pay the issue and publication fees on or before April 12, 2007, as required by the Notice of Allowance and Fee(s) Due, mailed January 12, 2007. Accordingly, the date of abandonment of this application is April 13, 2007.

The petition satisfies the requirements of 37 CFR 1.137(b) in that petitioner has supplied (1) the reply in the form of payment of the issue fee of $1440 and the publication fee of $300, (2) the petition fee of $1540; and (3) a proper statement of unintentional delay.

Telephone inquiries concerning this decision should be directed to Denise Williams at (571) 272-8930.

This application is being referred to the Office of Data Management for processing into a patent.

Andrea Smith
Petitions Examiner
Office of Petitions

UNITED STATES PATENT AND TRADEMARK OFFICE

Commissioner for Patents
United States Patent and Trademark Office
PO Box 1450
Alexandria, VA 22313-1450
www.uspto.gov

Paper No. 5

John C. Alemanni, Esq.
Kilpatrick Stockton LLP
1001 West Fourth Street
Winston-Salem NC 27101

COPY MAILED

AUG 2 9 2003

OFFICE OF PETITIONS

In re Application of
Hodges, Menon and Osbourne
Application No. 10/323,501
Filed: December 18, 2002
Attorney Docket No.
60027.0282US01/BS02324
For: SYSTEM AND METHOD FOR PROVIDING A SERVICE-ORIENTED CONTAINER

DECISION GRANTING PETITION UNDER 37 CFR 1.47(a)

This is in response to the petition under 37 CFR 1.47(a), filed August 7, 2003 (certificate of mailing August 4, 2003). Petitioner obtained a four-month extension of time. Accordingly, the petition is timely filed.

The petition is granted.

Petitioner has shown that Jai Menon, the nonsigning inventor, cannot be located after diligent efforts to find him.

The above-identified application and papers have been reviewed and found in compliance with 37 CFR 1.47(a). This application is hereby accorded Rule 1.47(a) status. As provided in Rule 1.47(c), this Office will forward notice of this application's filing to the nonsigning inventor at the address given in the declaration. Notice of the filing of this application will also be published in the Official Gazette.

The $130.00 petition fee is being charged to Deposit Account No. 13-2725, as authorized in the petition.

The application file is being forwarded to Technology Center 2100 for examination in due course.

Telephone inquiries regarding this decision should be directed to the undersigned at (703) 306-5589.

Christina Tartera Donnell

Christina Tartera Donnell
Senior Petitions Attorney
Office of Petitions

NOTICE RE: CERTIFICATES OF CORRECTION

DATE : 4/16/05 Paper No.: _____

TO : Supervisor, Art Unit 1626

SUBJECT : Certificate of Correction Request in Patent No.: 10/333,511 6,838,466 B2

A response to the following question is requested with respect to the accompanying request for a certificate of correction.

With respect to the change(s) requested, correcting Office and/or Applicant's errors, should the patent read as shown in the certificate of correction? No new matter should be introduced, nor should the scope or meaning of the claims be changed.

PLEASE COMPLETE THIS FORM AND RETURN WITH FILE, WITHIN 7 DAYS, TO CERTIFICATES OF CORRECTION BRANCH - PK 3-915/922 PALM LOCATION 7580 - TEL. NO. 305-8309

THANK YOU FOR YOUR ASSISTANCE!

Note your decision by placing a check mark in the appropriate box below, indicating whether all changes requested in the Request for Certificate of Correction should be applied. Please specify which changes should not be applied and indicate the reason(s) for denial, in the "Comments" section below.

☒ YES ☐ NO

☐ Comments: _____

JOSEPH K. McKANE
SUPERVISORY PATENT EXAMINER
TECHNOLOGY CENTER 1600

1626
Art Unit

PTOL-306 (REV. 2/02) U.S. DEPARTMENT OF COMMERCE Patent and Trademark Office

BEST AVAILABLE COPY

UNITED STATES PATENT AND TRADEMARK OFFICE

Commissioner for Patents
United States Patent and Trademark Office
P.O. Box 1450
Alexandria, VA 22313-1450
www.uspto.gov

Paper No.

BRUCE W. SLAYDEN II
BAKER BOTTS L.L.P.
910 LOUISIANA
HOUSTON, TX 77002-4995

COPY MAILED

SEP 14 2004

OFFICE OF PETITIONS

In re Application of	:	
Anders Emericks et al	:	
Application No. 10/323,542	:	DECISION DISMISSING PETITION
Filed: December 18, 2002	:	UNDER 37 CFR 1.55(c)
Attorney Docket No. 068758.0120	:	

This is a decision on the petition filed July 21, 2004, which is being treated as a petition under 37 C.F.R. §1.55(c) requesting acceptance of an unintentionally delayed claim under 35 USC 119(a) through (d) for the benefit of the filing date of foreign Sweden Application No. SE 0002350-7filed June 21, 2000.

The petition is **DISMISSED.**

A petition under 37 CFR 1.55(c) to accept an unintentionally delayed claim for priority requires:

(1) the nonprovisional application claiming the benefit of an earlier filing date must be filed on or after November 29, 2000;

(2) the claim submitted with the petition must identify the prior foreign application for which priority is claimed, as well as any foreign application for the same subject matter and having a filing date before that of the application for which priority is claimed, by the application number, country, and the filing date, and must be supplied on an application data sheet in accordance with 37 CFR 1.76 or on the oath or declaration;

(3) the surcharge as set forth in 37 CFR 1.17(t);

(4) a statement that the entire delay between the date the claim was due under 37 CFR 1.55(a)(1)(i) and the date the claim was filed was unintentional. (The Commissioner may require additional information where there is a question whether the delay was unintentional); and

(5) the above-identified nonprovisional application must be filed within 12 months of the filing date of the foreign application.

The petition is not in compliance with item (2) above.

A substitute declaration or a proper ADS in compliance with 37 CFR 1.76 is required. Additionally, it is impermissible and improper to include a claim for foreign priority in an amendment to the specification.

Further correspondence with respect to this matter should be addressed as follows:

By mail: Mail Stop PETITIONS
Commissioner for Patents
Post Office Box 1450
Alexandria, VA 22313-1450

By hand: Customer Window located at:
U.S. Patent and Trademark Office
220 20th Street S
Customer Window, Mail Stop Petitions
Crystal Plaza Two Lobby, Room 1B03
Arlington, VA 22202

By fax: (703) 872-9306
ATTN: Office of Petitions

Any questions concerning this matter may be directed to the undersigned at (703) 305-8859.[1]

Karen Creasy

Karen Creasy
Petitions Examiner
Office of Petitions
Office of the Deputy Commissioner
for Patent Examination Policy

[1] Effective September 27, 2004, the phone number will be 571-272-3208.

UNITED STATES PATENT AND TRADEMARK OFFICE

Commissioner for Patents
United States Patent and Trademark Office
P.O. Box 1450
Alexandria, VA 22313-1450
www.uspto.gov

BRUCE W. SLAYDEN II
BAKER BOTTS L.L.P.
910 LOUISIANA
HOUSTON TX 77002-4995

COPY MAILED

APR 1 1 2005

OFFICE OF PETITIONS

In re Application of :
Anders Emericks et al :
Application No. 10/323,542 : DECISION GRANTING PETITION
Filed: December 18, 2002 : UNDER 37 CFR 1.55(c)
Attorney Docket No. 068758.0120 :

This is a decision on the renewed petition filed December 2, 2004, under 37 CFR 1.55(c) requesting acceptance of an unintentionally delayed claim under 35 USC 119(a) through (d) for benefit of the filing date of foreign Sweden Application No. SE 0002350-7, filed June 21, 2000.

A petition for acceptance of a claim for foreign priority under 37 CFR 1.55(c) is only applicable to those applications filed on or after November 29, 2000. Further, the nonprovisional application must be filed within 12 months of the filing date of the foreign application. In addition, a petition under 37 CFR 1.55(c) to accept an unintentionally delayed claim for priority under 35 U.S.C. § 119(a)-(d) must be accompanied by:

> (1) the claim under 35 U.S.C. §119(a)-(d) to the prior foreign application, unless previously submitted;[1]
>
> (2) the surcharge set forth in § 1.17(t); and
>
> (3) a statement that the entire delay between the date the claim was due and the date the claim was filed was unintentional. The Commissioner may require additional information where there is a question whether the delay was unintentional.

The instant pending nonprovisional application was filed after November 29, 2000, and did not include a reference to the foreign application, for which benefit is now sought, within the later of four months from the actual filing date of the application or sixteen months from the filing date of the prior foreign application. Therefore,

---

[1] The claim must identify in the oath or declaration the foreign application for which priority is claimed, as well as any foreign application for the same subject matter and having a filing date before that of the application for which priority is claimed, by specifying the application number, country, and the filing date. *Note* also 37 CFR 1.63(c)(2).

since the claim for priority is submitted after the period specified in 37 CFR 1.55(a)(1)(i), this is an appropriate petition under the provisions of 37 CFR 1.55(c).

The above-identified pending nonprovisional application was filed on December 18, 2002, which is after November 29, 2000. Intermediate Application No. PCT/SE01/01446 was filed within 12 months of June 21, 2000 (the filing date of the foreign application to which benefit is now being claimed). On December 2, 2004, an executed oath/declaration was received which identifies the foreign application for which priority is claimed by application number, country and filing date. The required petition fee was received with the petition on July 21, 2004. Lastly, petitioner has provided an adequate statement of unintentional delay.

All requirements being met, the petition under 37 CFR 1.55(c) to accept an unintentionally delayed claim for priority under 35 U.S.C. § 119(a) through (d) is **granted.**

This matter is being referred to Technology Center AU 2642 for consideration by the examiner of record of the foreign priority claim under 35 U.S.C. § 119(a) through (d) and 37 CFR 1.55(c).

Any inquiries directly pertaining to this matter may be directed to the undersigned at (571) 272-3208.

Karen Creasy

Karen Creasy
Petitions Examiner
Office of Petitions
Office of the Deputy Commissioner
for Patent Examination Policy

UNITED STATES PATENT AND TRADEMARK OFFICE

Commissioner for Patents
United States Patent and Trademark Office
P.O. Box 1450
Alexandria, VA 22313-1450
www.uspto.gov

THE PROCTER & GAMBLE COMPANY
INTELLECTUAL PROPERTY DIVISION - WEST BLDG.
WINTON HILL BUSINESS CENTER - BOX 412
6250 CENTER HILL AVENUE
CINCINNATI OH 45224

COPY MAILED

SEP 21 2007

OFFICE OF PETITIONS

In re Application of :
Schmidt, et al. :
Application No. 10/323,572 : ON PETITION
Filed: December 18, 2002 :
Attorney Docket No. CM2375CQ :
For: DISPOSABLE ABSORBENT ARTICLES HAVING LOW REWET AND A REDUCED EVAPORATION FROM THE CORE THROUGH THE TOPSHEET

This is a decision on the petition under 37 CFR 1.137(b), filed on April 30, 2007 to revive the above-identified application.

This application became abandoned for failure to properly respond to the final Office action mailed August 24, 2006, which set an extendable three month period for reply. Applicants submitted an amendment after final on October 13, 2006. The amendment after final failed to place this application in *prima facie* condition for allowance. A Notice of Abandonment was mailed on April 10, 2007. This application became abandoned on November 25, 2006.

Petitioners have submitted a RCE, authorization to charge the required fee to petitioners' deposit account, and a request to use the previously filed amendment as the submission in reply to the August 24, 2006 final Office action, an acceptable statement of the unintentional nature of the delay in responding to the August 24, 2006 final Office action, and authorization to charge the petition fee to petitioners' deposit account. Deposit account no. 16-2480 will be charged the $1,500.00 petition fee and the $790.00 RCE fee shortly.

All requirements under 37 CFR 1.137(b) being met, the petition is **GRANTED**.

After the mailing of this decision the application will be forwarded to Technology Center AU 3761 for consideration of the RCE filed on April 30, 2007.

Telephone inquiries pertaining to this decision may be directed to the undersigned at (571) 272-3230.

Shirene Willis Brantley
Senior Petitions Attorney
Office of Petitions

UNITED STATES PATENT AND TRADEMARK OFFICE

Commissioner for Patents
United States Patent and Trademark Office
P.O. Box 1450
Alexandria, VA 22313-1450
www.uspto.gov

JACOBSON HOLMAN PLLC
400 SEVENTH STREET N.W.
SUITE 600
WASHINGTON DC 20004

COPY MAILED

JAN 22 2008

OFFICE OF PETITIONS

In re Application of :

JUILLETT, Hubert :
Application No. 10/323,598 : DECISION ON PETITION
Filed: December 19, 2202 : TO WITHDRAW
Attorney Docket No. **P68460US0** : FROM RECORD
:

This is a decision on the Request to Withdraw as attorney or agent of record under 37 C.F.R. § 1.36(b), filed November 26, 2007.

The request is **APPROVED**.

A grantable request to withdraw as attorney/agent of record must be signed by every attorney/agent seeking to withdraw or contain a clear indication that one attorney is signing on behalf of another/others. A request to withdraw will not be approved unless at least 30 (thirty) days would remain between the date of approval and the later of the expiration date of a time to file a response or the expiration date of the maximum time period which can be extended under 37 C.F.R. § 1.136(a).

The request was signed by John Moetteli on behalf of all attorneys of record who are associated. All attorneys/agents associated have been withdrawn. Applicant is reminded that there is no attorney of record at this time.

All future correspondence will be directed to inventor Hubert Juillet at the address indicated below. There is an outstanding Office action mailed September 20, 2007 that requires a reply from the applicant.

Telephone inquiries concerning this decision should be directed to Tredelle Jackson at 571-272-2783.

Monica A. Graves
Petitions Examiner
Office of Petitions

cc: **HUBERT JUILLET**
20 BIS, RUE FAYOLLE
WILLER SUR THUR, FR 68760
FRANCE

cc: **MOETTELI & ASSOCIATES SARL**
ST. LEONHARDSTRASSE 4
ST. GALLEN, SWITZERLAND CH900-0

UNITED STATES PATENT AND TRADEMARK OFFICE

Commissioner for Patents
United States Patent and Trademark Office
P.O. Box 1450
Alexandria, VA 22313-1450
www.uspto.gov

PAUL F. McQUADE
GREENBERG-TRAURIG
1750 TYSONS BOULEVARD, 12TH FLOOR
MCLEAN VA 22102

COPY MAILED

APR 25 2006

OFFICE OF PETITIONS

In re Application of
AAMODT, JAMES
Application No. 10/323,602
Filed: December 19, 2002
Attorney Docket No. 60812.010100

DECISION ON PETITION
TO WITHDRAW
FROM RECORD

This is a decision on the Request to Withdraw as attorney or agent of record under 37 C.F.R. § 1.36(b), filed July 13, 2005.

The request is **NOT APPROVED**.

A review of the file record indicates that the power of attorney of record in this application was not appointed by customer number. Accordingly, the request under 37 C.F.R. § 1.136(b) to withdraw attorneys/agents associated with the customer number #22191 cannot be approved.

All future communications from the Office will continue to be directed to the above-listed address until otherwise notified by applicant.

There is an outstanding Office action mailed March 8, 2006 that requires a reply from the applicant.

Telephone inquires concerning this decision should be directed to Amelia Au at 571-272- 7414.

Amelia Au
Petitions Examiner
Office of Petitions

cc: Mr. James Aamodt
c/o Ken Pellet
Millars HiWay Tire
1175 SE 1st.
Canby, OR 97013

cc: IPSOLON LLP
111 SW COLUMBIA
SUITE 710
PORTLAND, OR 97201

UNITED STATES PATENT AND TRADEMARK OFFICE

Commissioner for Patents
United States Patent and Trademark Office
P.O. Box 1450
Alexandria, VA 22313-1450
www.uspto.gov

Greenbery-Traurig
1750 Tysons Boulevard
12th Floor
Mclean, VA 22102

COPY MAILED

SEP 0 6 2006

OFFICE OF PETITIONS

In re Application of
James Aamodt et al.
Application No. 10/323,602
Filed: December 19, 2002
Attorney Docket No. 1408-001/ddh

DECISION ON PETITION
TO WITHDRAW
FROM RECORD

This is a decision on the Request to Withdraw as attorney or agent of record under 37 C.F.R. § 1.36(b), filed May 2, 2006.

The request is **NOT APPROVED** as moot.

A review of the file record indicates that the power of attorney to Paul F. McQuade and the attorney(s) and/or agent(s) of record have been revoked by the assignee of the patent application on August 12, 2005. Accordingly, the request to withdraw under 37 C.F.R. § 1.36(b) is moot.

All future communications from the Office will continue to be directed to the below-listed address until otherwise notified by applicant.

Telephone inquires concerning this decision should be directed to Terri Williams at 571-272-2991.

David Bucci
Petitions Examiner
Office of Petitions

cc: Isolon LLP
111 SW Columbia
Suite 7100
Portland, OR 97201

UNITED STATES PATENT AND TRADEMARK OFFICE

COMMISSIONER FOR PATENTS
UNITED STATES PATENT AND TRADEMARK OFFICE
P.O. BOX 1450
ALEXANDRIA, VA 22313-1450
www.uspto.gov

Paper No. 7

HELLER EHRMAN WHITE & MCAULIFFE LLP
275 MIDDLEFIELD ROAD
MENLO PARK, CA 94025-3506

COPY MAILED

NOV 1 3 2003

OFFICE OF PETITIONS

In re Application of:
Dirk Boeker, Dominique M. Freeman
and Michael Wittig
Application No. 10/323,622
Filed: December 18, 2002
Title of Invention: METHOD AND
APPARATUS FOR A MULTI-USE BODY
FLUID SAMPLING DEVICE

DECISION REFUSING
STATUS
UNDER 37 CFR 1.47(a)

This is in response to a petition under 37 CFR 1.47(a), filed September 3, 2003, to allow the other inventor(s) to proceed with the application on behalf of himself or herself and the nonsigning inventor.

The petition is **dismissed**.

Rule 47 applicant is given TWO (2) MONTHS from the mailing date of this decision to reply, correcting the below-noted deficiencies. Any reply should be entitled "Request for Reconsideration of Petition Under 37 CFR 1.47(a)", and should only address the deficiencies noted below, except that the reply may include an oath or declaration executed by the non-signing inventor. Failure to respond will result in abandonment of the application. Any extensions of time will be governed by 37 CFR 1.136(a).

The above-identified application was filed on December 18, 2002, without an oath or declaration. This Office mailed a Notice to File Missing Parts of Nonprovisional Application (hereinafter "Notice") on March 3, 2003, requiring, *inter alia*, a properly signed oath or declaration and a late filing fee, oath or declaration and surcharge.

In response to the Notice, Applicant files the instant petition wherein Applicant avers that the Declaration and Power of Attorney was mailed to the nonsigning inventor at his last known address. Applicant further avers that an email from the nonsigning inventor to Applicant indicates that the nonsigning inventor received the materials. The petition is further

supported by the Declaration of Dominique M. Freeman, wherein it is further asseverated that the Declaration and Power of Attorney was mailed to the nonsigning inventor at his last known address.

A grantable petition under 37 CFR 1.47(a) requires: (1) proof that the non-signing inventor cannot be reached or refuses to sign the oath or declaration after having been presented with the application papers (specification, claims and drawings); (2) an acceptable oath or declaration in compliance with 35 U.S.C. §§ 115 and 116; (3) the petition fee; and (4) a statement of the last known address of the non-signing inventor. Applicant lacks item (1) as set forth above.

Applicant lacks item (1) set forth above.

As to item (1), where it is alleged that an applicant refuses to join an application, the applicant must establish that the nonsigning inventor was presented with the application for signature. The Manual of Patent Examining Procedure ("MPEP") states that

> A refusal by an inventor to sign an oath or declaration when the inventor has not been presented with the application papers does not itself suggest that the inventor is refusing to join the application unless it is clear that the inventor understands exactly what he or she is being asked to sign and refuses to accept the application papers. A copy of the application papers should be sent to the last known address of the nonsigning inventor, or, if the nonsigning inventor is represented by counsel, to the address of the nonsigning inventor's attorney.

MPEP 409.03(d).

While the petition avers that the nonsigning inventor refuses to sign the Declaration and Power of Attorney, the petition does not aver that the application (specification, claims and drawings) was sent to the nonsigning inventor. Accordingly, where it is alleged that an inventor refuses to join an application, the MPEP requires that a copy of the application be

sent to the last known address of the nonsigning inventor. See, MPEP 409.03(e).

Further correspondence with respect to this matter should be addressed as follows:

By mail: Commissioner for Patents
PO Box 1450
Alexandria, VA 22313-1450

By FAX: (703) 308-6916
Attn: Office of Petitions

By hand: Crystal Plaza Four, Suite 3C23
2201 S. Clark Place
Arlington, VA

Telephone inquiries concerning this decision should be directed to the undersigned at (703) 305-0014.

Derek L. Woods
Petitions Attorney
Office of Petitions

UNITED STATES PATENT AND TRADEMARK OFFICE

COMMISSIONER FOR PATENTS
UNITED STATES PATENT AND TRADEMARK OFFICE
P.O. BOX 1450
ALEXANDRIA, VA 22313-1450
www.uspto.gov

Paper No. 12

HELLER EHRMAN WHITE & MCAULIFFE LLP
275 MIDDLEFIELD ROAD
MENLO PARK, CA 94025-3506

COPY MAILED

SEP 23 2004

OFFICE OF PETITIONS

In re Application of:	:	
Dirk Boeker, Dominique M. Freeman	:	
and Michael Wittig	:	DECISION NOTING
Application No. 10/323,622	:	JOINDER OF
Filed: December 18, 2002	:	INVENTOR
Title of Invention: METHOD AND	:	
APPARATUS FOR A MULTI-USE BODY	:	
FLUID SAMPLING DEVICE	:	

This is in response to the Request for Reconsideration Petition, under 37 CFR 1.47(a), filed January 16, 2004, noting the joinder of the inventor.

In view of the joinder of the inventor, further consideration under 37 CFR 1.47(a) is not necessary and the Reconsideration of Petition is considered to be moot. This application does not have any Rule 1.47(a) status and no such status should appear on the file wrapper. This application need not be returned to this Office for further consideration under 37 CFR 1.47(a).

The file is being retained in the Office of Petitions for consideration of the Request for Corrected Filing Receipt, filed January 16, 2004.

Telephone inquiries related to this decision may be directed to the undersigned at (703) 305-0014.

Derek L. Woods
Petitions Attorney
Office of Petitions

UNITED STATES PATENT AND TRADEMARK OFFICE

COMMISSIONER FOR PATENTS
UNITED STATES PATENT AND TRADEMARK OFFICE
P.O. BOX 1450
ALEXANDRIA, VA 22313-1450
www.uspto.gov

Paper No. 6

HELLER EHRMAN WHITE & MCAULIFFE LLP
275 MIDDLEFIELD ROAD
MENLO PARK CA 94025-3506

COPY MAILED

DEC 0 9 2003

OFFICE OF PETITIONS

In re Application of :
Dirk Boecker, Michael Wittig, :
Don Alden, Michael Cane, Matt : DECISION REFUSING
Schumann, Michael Beadman : STATUS UNDER § 1.47(a)
Application No. 10/323,623 :
Filing Date: December 18, 2002 :
Attorney Docket No. 38187-2607

This is in response to the "Declaration To Establish Proof of the Unwillingness of the Named Inventor Michael Wittig to Sign the Declaration (37 CFR 1.47(a))," filed October 3, 2003, which is being treated as a petition under 37 CFR 1.47(a).

The petition under 37 CFR 1.47(a) is **DISMISSED**.

Rule 47 applicant is given TWO MONTHS from the mailing date of this decision to reply, correcting the below-noted deficiencies. Any reply should be entitled "Request for Reconsideration of Petition Under 37 CFR 1.47(a)," and should only address the deficiencies noted below, except that the reply may include an oath or declaration executed by the non-signing inventors. **Failure to respond will result in abandonment of the application.** Any extensions of time will be governed by 37 CFR 1.136(a).

The above-identified application was filed on August 21, 2001, without, *inter alia*, an oath or declaration. Accordingly, a Notice to File Missing Parts of Nonprovisional Application was mailed on March 3, 2003. This Notice set an extendable period for reply of two months. On October 3, 2003, applicants filed the instant petition, made timely by obtaining a five month extension of time.

A grantable petition under 37 CFR 1.47(a) requires: (1) proof that the non-signing inventor(s) cannot be reached or refuses to sign the oath or declaration after having been presented with the application papers (specification, claims and drawings); (2) an acceptable oath or declaration in compliance with 37 CFR 1.63; (3) the petition fee; and (4) a statement of the last known address of the non-signing inventor(s). The instant petition does not satisfy requirements (1) and (2).

As to requirement (1), there has been no showing that Michael Wittig was presented with the application papers (specification, claims, drawings, oath or declaration). Rather, the petition only establishes that Wittig was forwarded a copy of a declaration and power of attorney form. Regarding this, the Manual of Patent Examining Procedure states:

> A refusal by an inventor to sign an oath or declaration when the inventor has not been presented with the application papers does not itself suggest that the inventor is refusing to join the application unless it is clear that the inventor understands exactly what he or she is being asked to sign and refuses to accept the application papers.
>
> It is reasonable to require that the inventor be presented with the application papers before a petition under 37 CFR 1.47 is granted since such a procedure ensures that the inventor is apprised of the application to which the oath or declaration is directed. In re Gray, 115 U.S.P.Q. 80 Comm'r Pat. 1956).

Proof that a *bona fide* attempt was made to present a copy of the application papers (specification, including claims, drawings, and oath or declaration) to the nonsigning inventor for signature, but the inventor refused to accept delivery of the papers or expressly stated that the application papers should not be sent, may be sufficient.[1]

As to requirement (2), petitioner has not submitted a proper 37 CFR 1.63 declaration. Where at least one joint inventor has signed a declaration, the signature block for the nonsigning inventors should be left **blank**. Such a declaration will be treated as having been signed by the available joint inventors on behalf of non-signing inventor Wittig.[2] The declaration submitted by petitioner was signed by inventor Don Alden on behalf of Wittig.

Petitioner did not submit the petition fee of $130. However, petitioner did include an authorization to charge any additional fees to his deposit account. Accordingly, the petition fee of $130 has been charged to Deposit Account No. $2,796, as authorized.

---

[1] MPEP 409.03(d).

[2] See MPEP 409.03(a).

Further correspondence with respect to this matter should be addressed as follows:

By mail: Mail Stop Petitions
Commissioner for Patents
P.O. Box 1450
Alexandria VA 22313-1450

By FAX: (703) 872-9306
Attn: Office of Petitions

Telephone inquiries concerning this decision may be directed to the undersigned at (703) 305-0272.

Cliff Congo
Petitions Attorney
Office of Petitions

UNITED STATES PATENT AND TRADEMARK OFFICE

COMMISSIONER FOR PATENTS
UNITED STATES PATENT AND TRADEMARK OFFICE
P.O. BOX 1450
ALEXANDRIA, VA 22313-1450
www.uspto.gov

Paper No. 9

HELLER EHRMAN WHITE & MCAULIFFE LLP
275 MIDDLEFIELD ROAD
MENLO PARK CA 94025-3506

COPY MAILED

MAR 0 9 2004

OFFICE OF PETITIONS

In re Application of Boecker, et al. Application No. 10/323,623 Filed: December 18, 2002 Attorney Docket No. 38187-2607 Title: METHOD AND APPARATUS FOR A MULTI-USE BODY FLUID SAMPLING DEVICE WITH STERILITY BARRIER RELEASE	:	DECISION NOTING JOINDER OF INVENTOR AND PETITION UNDER 37 CFR 1.47(a) MOOT

This is in response to the paper titled "Communication", filed January 16, 2004, which is being treated as a renewed petition under 37 CFR 1.47(a).

The above-identified application was filed on December 18, 2002, without, *inter alia*, an oath or declaration. Accordingly, a Notice to File Missing Parts of Nonprovisional Application was mailed on March 3, 2003. This Notice set an extendable period for reply of two months. On October 3, 2003, applicants filed a petition under 37 CFR 1.47(a), made timely by obtaining a five month extension of time.

However, this petition was dismissed in a decision mailed on December 9, 2003. The declaration submitted was not in compliance with 37 CFR 1.63. In addition, Rule 47 applicant did not establish that the nonsigning inventor (Michael Wittig) was presented with a copy of the application papers.

With the instant petition, petitioner has now submitted a declaration in compliance with 37 CFR 1.63 and executed by all of the inventors.

In view of the **joinder** of the inventors, further consideration under 37 CFR 1.47(a) is not necessary and the petition is considered to be **moot**. This application does not have any Rule 1.47(a) status and no such status should appear on the file wrapper. This application need not be returned to this Office for further consideration under 37 CFR 1.47(a).

The application is being forwarded to Group Art Unit 3731 for docketing.

Telephone inquiries regarding this decision should be directed to the undersigned at (703) 305-0272.

Cliff by

Cliff Congo
Petitions Attorney
Office of Petitions

UNITED STATES PATENT AND TRADEMARK OFFICE

COMMISSIONER FOR PATENTS
UNITED STATES PATENT AND TRADEMARK OFFICE
WASHINGTON, D.C. 20231
www.uspto.gov

Paper No. 03062005

In re Application of HAWKINS ET AL.
Appl No.: 10/323,644
Filed: December 20, 2002
For: GAS GRATE LOCATING ASSEMBLY FOR A CERAMIC-BASED COOKTOP

DECISION GRANTING PETITION
37 CFR 1.48

This is a decision on the petition filed 7/23/2003 to correct inventorship under 37 CFR 1.48.

The petition is granted.

The inventorship in this application has been corrected to add Jeffrey Ware.

Jiping Lu
Primary Examiner,
Art Unit 3749,
Technology Center 3700

DIEDERIKS & WHITELAW, PLC
12471 DILLINGHAM SQUARE, #301
WOODBRIDGE, VA 22192

UNITED STATES PATENT AND TRADEMARK OFFICE

Commissioner for Patents
United States Patent and Trademark Office
P. O. Box 1450
Alexandria, VA 22313-1450
www.uspto.gov

Paper No. 7

Keating and Bennett, LLP
10400 Eaton Place
Suite 312
Fairfax, VA 22030

COPY MAILED

JUL 1 8 2003

OFFICE OF PETITIONS

In re Application of :
Robert Miskimmin, et al. :
Application No. 10/323,659 : ON PETITION
Filed: December 20, 2002 :
Attorney Docket No. 50626.46 :

This is in response to the petition under 37 CFR 1.47(a), filed May 14, 2003.

The petition is granted.

Petitioner has shown that the non-signing inventor has refused to join in the filing of the above-identified application.

The above-identified application and papers have been reviewed and found in compliance with 37 CFR 1.47(a). This application is hereby accorded Rule 1.47(a) status.

As provided in 37 CFR 1.47(a), this Office will forward notice of this application's filing to the non-signing inventor at the address given in the petition. Notice of the filing of this application will also be published in the Official Gazette.

The application file is being forwarded to the Office of Initial Patent Examination for further processing.

Telephone inquiries regarding this decision should be directed to Marianne Morgan at (703) 306-3475.

Frances M. Hicks
Lead Petitions Examiner
Office of Petitions
Office of the Deputy Commissioner
for Patent Examination Policy

UNITED STATES PATENT AND TRADEMARK OFFICE

Commissioner for Patents
United States Patent and Trademark Office
P. O. Box 1450
Alexandria, VA 22313-1450
www.uspto.gov

Mr. Cuong Thuy Luong
132 FoxHound Crescent
Woodbridge, Ontario, Canada L4H 2H4

COPY MAILED

JUL 1 8 2003

OFFICE OF PETITIONS

In re Application of
Robert Miskimmin; Trevor Bain; Kathirkamanathan (Nathan) Nadarajah ; David Brown ; Cuong Thuy Luong; and Steven Aitken
Application No. 10/323,659
Filed: December 20, 2002
For: SYSTEM AND METHOD FOR STORAGE AND RETRIEVAL OF CRYPTOGRAPHIC KEYS

Dear Mr. Luong:

You are named as a joint inventor in the above-identified United States patent application, filed under the provisions of 35 U.S.C. 116 (United States Code), and 37 CFR 1.47(a), Rules of Practice in Patent Cases. Should a patent be granted on the application you will be designated therein as a joint inventor.

As a named inventor you are entitled to inspect any paper in the file wrapper of the application, order copies of all or any part thereof (at a prepaid cost per 37 CFR 1.19) or make your position of record in the application. Alternatively, you may arrange to do any of the preceding through a registered patent attorney or agent presenting written authorization from you. If you care to join the application, counsel of record (see below) would presumably assist you. Joining the application would entail the filing of an appropriate oath or declaration by you pursuant to 37 CFR 1.63.

Telephone inquiries regarding this communication should be directed to Marianne Morgan at (703) 306-3475. Requests for information regarding your application should be directed to the File Information Unit at (703) 308-2733. Information regarding how to pay for and order a copy of the application, or a specific paper in the application, should be directed to the Certification Division at (703) 308-9726 or 1 (800) 972-6382 (outside the Washington, DC area).

Frances Hicks

Frances M. Hicks
Lead Petitions Examiner
Office of Petitions
Office of the Deputy Commissioner
for Patent Examination Policy

cc: Keating and Bennett, LLP
Suite 312
10400 Eaton Place
Fairfax, VA 22030

UNITED STATES PATENT AND TRADEMARK OFFICE

Commissioner for Patents
United States Patent and Trademark Office
P.O. Box 1450
Alexandria, VA 22313-1450
www.uspto.gov

BURNS, DOANE, SWECKER & MATHIS, L.L.P.
P.O. Box 1404
Alexandria VA 22313-1404

In re Application of:
GUIDOTTI, TED
Serial No. 10/323,665
Filed: Dec. 20, 2002
Docket: 018798-115
Title: ABSORBENT STRUCTURE, AND ABSORBENT ARTICLE CONTAINING THE ABSORBENT STRUCTURE

DECISION ON PETITION
UNDER 37 CFR § 1.181

This is a decision on the petition filed on Aug. 12, 2008 under 37 CFR § 1.181. Petitioner requests withdrawal of the holding of abandonment mailed Jul. 11, 2008.

The petition is Granted.

The applicants filed a Request for Continued Examination on Dec. 7, 2007. USPTO mailed a Notice of Allowance on Mar. 18, 2008. However, a Notice of Withdrawal From Issue was also mailed on Mar. 14, 2008 indicating there is at least one or more claims are unpatentable. In the meantime, the applicant was led to believe the Notice of Allowance mailed Mar. 18, 2008 was withdrawn and the prosecution is being re-opened. Since there was no new Office action mailed after the receipt of the a Notice of Withdrawal From Issue, then, the Notice of Abandonment was mailed on Jul. 11, 2008 for failure to pay issue fee. Subsequently, the current petition was filed on Aug. 12, 2008 requesting that the holding of abandonment be withdrawn. In the petition, petitioner also argues that if the Notice of Withdrawal decided March 13, 2008 did not pertain to the Notice of Allowance decided March 13, 2008, there is no other Notice of Allowance to which it could pertain. Petitioner opines that the application had to be allowed before it can be withdrawn from issue. Therefore, since the Notice of Withdrawal from Issue withdrew the Notice of Allowance, the application could not be abandoned for failure to pay the withdrawn Notice of Allowance.

In finding petitioner's points of argument persuasive, the requested relief is granted. The holding of abandonment is hereby withdrawn. The examiner has been directed to issue an Office action not inconsistent with the Notice to Withdrawal from Issue mailed on Mar. 14, 2008.

The application was forwarded to Examiner Jacqueline Stephens via Supervisory Patent Examiner of Art Unit 3761 for preparation of an Office action.

Any inquiry regarding this decision should be directed to Henry C. Yuen, Special Programs Examiner, at (571) 272-4856.

PETITION GRANTED.

Frederick R. Schmidt, Director
Technology Center 3700

UNITED STATES PATENT AND TRADEMARK OFFICE

UNITED STATES DEPARTMENT OF COMMERCE
United States Patent and Trademark Office
Address: COMMISSIONER FOR PATENTS
P.O. Box 1450
Alexandria, Virginia 22313-1450
www.uspto.gov

Dicke, Billig & Czaja, PLLC
ATTN: Christopher McLaughlin
Fifth Street Towers, Suite 2250
100 South Fifth Street
Minneapolis, MN 55415

Mail Date: 04/21/2010

Applicant	: John T. Strom	: DECISION ON REQUEST FOR
Patent Number	: 7634129	: RECALCULATION of PATENT
Issue Date	: 12/15/2009	: TERM ADJUSTMENT IN VIEW
Appliction No	: 10/323,696	: OF WYETH AND NOTICE OF INTENT TO
Filed	: 12/18/2002	: ISSUE CERTIFICATE OF CORRECTION
		:

The Request for Recalculation is **GRANTED** to the extent indicated.

The patent term adjustment has been determined to be **904** days. The USPTO will *sua sponte* issue a certificate of correction reflecting the amount of PTA days determined by the recalculation.

Prior to the issuance of the certificate of correction, the USPTO will afford patentee an opportunity to be heard and request reconsideration. Accordingly, patentee has **one month or thirty (30) days**, whichever is longer, to file a request for reconsideration of this patent term adjustment calculation. See 35 U.S.C. 154(b)(3)(B)(ii) and 37 CFR 1.322(a)(4). No extensions of time will be granted under 37 CFR 1.136.

Patentee should use document code PET.OP if electronically filing a request for reconsideration of this patent term adjustment calculation. The patentee must also include the information required by 37 CFR 1.705(b)(2) and the fee required by 37 CFR 1.18(e). If patentee does not file a timely request for reconsideration of this patent term adjustment calculation including the information required by 37 CFR 1.705(b)(2) and the fee required by 37 CFR 1.18(e), the USPTO will issue a certificate of correction reflecting the PTA determination noted above.

Patentee should be aware that in order to preserve the right to review in the United States District Court for the District of Columbia of the USPTO patent term adjustment determination, patentee must ensure that he or she also take the steps required under 35 U.S.C. 154(b)(4)(A) in a timely manner. Nothing in the request for recalculation should be construed as providing an alternative time frame for commencing a civil action under 35 U.S.C. 154(b)(4)(A).

Any questions concerning this decision should be directed to the Office of Patent Legal Administration at 571-272-7702.

UNITED STATES PATENT AND TRADEMARK OFFICE

Commissioner for Patents
United States Patent and Trademark Office
P.O. Box 1450
Alexandria, VA 22313-1450
www.uspto.gov

SCHWEGMAN, LUNDBERG, WOESSNER & KLUTH, P.A.
P.O. BOX 2938
MINNEAPOLIS, MN 55402

COPY MAILED

DEC 20 2004

OFFICE OF PETITIONS

In re Application of :
Kathryn E. Uhrich :
Application No. 10/323,699 : ON PETITION
Filed: December 18, 2002 :
Attorney Docket No. 1435.007US3 :

This is a decision on the petition under 37 CFR 1.137(b), filed September 24, 2004, to revive the above-identified application.

The petition is **GRANTED.**

The above-identified application became abandoned for failure to reply in a timely manner to the non-final Office action mailed February 17, 2004, which set a shortened statutory period for reply of three (3) months. No extensions of time under the provisions of 37 CFR 1.136(a) were obtained. Accordingly, the application became abandoned on May18, 2004.

An extension of time under 37 CFR 1.136 must be filed prior to the expiration of the maximum extendable period for reply. See In re Application of S., 8 USPQ2d 1630, 1631 (Comm'r Pats. 1988). Accordingly, the $475 extension of time submitted with the petition on September 24, 2004 was subsequent to the maximum extendable period for reply, this fee is unnecessary and will be credited to petitioner's deposit account number 19-0743 as authorized.

Telephone inquiries concerning this decision should be directed to the undersigned at (571) 272-3229.

The application matter is being referred to Technology Center 1600, Art Unit 1615 for further processing.

Retta Williams

Retta Williams
Petitions Examiner
Office of Petitions
Office of the Deputy Commissioner
for Patent Examination Policy

UNITED STATES PATENT AND TRADEMARK OFFICE

Commissioner for Patents
United States Patent and Trademark Office
P.O. Box 1450
Alexandria, VA 22313-1450
www.uspto.gov

MAILED
FROM DIRECTORS OFFICE

JAN 26 2006

TECHNOLOGY CENTER 3600

Henry S. Jaudon
McNair Law Firm, P.A.
P.O. Box 10827
Greenville, SC 29603-0827

In re Application of :
Heinrich Lang :
Application No. 10/323,702 :
Filed: December 18, 2002 :
Attorney Docket No.: LMX-146 :
For: LINKAGE ARRANGEMENT FOR THE ADJUSTMENT OF REARVIEW MIRRORS FOR MOTOR VEHICLES :

DECISION ON PETITION REGARDING REQUEST TO WITHDRAW FINALITY UNDER 37 CFR 1.181

This is in response to applicant's petition under 37 CFR 1.181 filed November 7, 2005 requesting withdrawal of the finality of the Office action mailed July 28, 2005 as being premature and improper.

The petition is **DENIED**.

Applicant alleges that the Final Rejection mailed July 28, 2005 is premature because it presents new issues not previously set forth by the examiner and because the Office action contains an error with respect to the explanation of the rejection such that the rejection is not understood and cannot be responded to.

A review of the record first reveals that no request for reconsideration to the examiner pursuant to 37 CFR 1.111 has been made. It is also noted that the instant petition was not filed within two months of the action or notice from which relief is requested. As stated in 37 CFR 1.181(f), any petition filed under this section not filed within two months of the mailing date of the action or notice from which relief is requested may be dismissed as untimely.

Second, the review reveals that the Office action mailed July 28, 2005 was made final by the examiner because the new grounds of rejection advanced therein were necessitated by applicant's amendment. See pages 16-17 of the Office action. Applicant does not allege any error in this stated reasoning of the examiner for making the Office action of July 28, 2005 final.

Applicant's petition alleges that the finality of the Office action mailed July 28, 2005 is premature because the action "presents new issues not before put forth". The "new issues" are stated to be the inclusion of a restriction requirement and several drawing and specification objections. The petition does not allege that the restriction requirement and various objections

are incorrect on their respective merits. Rather, it appears that it is applicant's position that the action cannot be properly made final because the Office action of July 28, 2005 is the first time that these issues have been presented.

MPEP 706.07(a) sets forth that the second or any subsequent action on the merits shall be made final except where the examiner introduces a new ground of rejection that is neither necessitated by applicant's amendment nor based on information submitted in an information disclosure statement filed during the period set forth in 37 CFR 1.97(c) with the fee set forth in 37 CFR 1.17(p). Further, 37 CFR 1.113 sets forth that the second or subsequent action may be made final and that petition may be taken to the Director in the case of "objections or requirements not involved in the rejection of any claim".

The MPEP is clear with respect to what criteria must be considered before a rejection can be properly made final and such criteria involves rejection of the claims. The restriction requirement and various objections to the drawings and specification do not involve the rejection of the claims and are not appealable matters. Rather, these matters are subject to review by way of petition to the Director. The right to file a petition is governed by timeliness of the petition, not by the finality of the Office action. Accordingly, the ability of applicant to seek correction or reconsideration of these formal matters is not impacted by the rejection of the claims being made final.

Specifically with respect to the restriction requirement, it is noted that the inventions involved are described as being related as combination and subcombination. Further, contrary to applicant's assertion, the response filed May 13, 2005 made amendments to the claims and thus "new" claims were presented. In other words, the claims presented to the examiner for consideration after the first Office action were of different scope than the originally filed claims.

With respect to the timing of the restriction requirement, 37 CFR 1.142(a) makes it clear that while normally made before any action on the merits, restriction is proper at any time before final action. It is apparent from the record that restriction between combination and subcombination was not considered to be proper before first action but became appropriate as a result of applicant's amendment filed May 13, 2005. It is further noted that the examiner contacted applicant's representative on July 19, 2005 to obtain an oral election in accordance with Office policy and procedure and the Group I invention was elected with oral traverse. The subsequent rejection of the claims, and the finality of those rejections, does not impact applicant's ability to provide a proper traverse of the restriction requirement in writing and seek reconsideration from the examiner if so desired.

With respect to the drawing and specification objections, it would have been preferred that these formal matters be identified at the time of the first action. Unfortunately, such was not the case. Nevertheless, a cursory review reveals that the informalities noted by the examiner are correct and are, in fact, in need of correction. Further, these objections have nothing to do with the rejections of record and are not appealable matters. Moreover, correction of formal matters identified by the examiner is one of the identified permissible responses an applicant may file after a final rejection. See 37 CFR 1.116(b)(1). Accordingly, ability to correct the identified formal matters is not impacted by the finality of the claim rejections.

With respect to applicant's remark about "piecemeal prosecution", it is unfortunate that these informalities were overlooked and not treated in the first Office action. However, the fact remains that informalities are present and in need of corrective action by applicant. Moreover, it should be noted that MPEP 707.07(g), in discussing piecemeal examination, makes it clear that this is referring to rejection of the claims.

With respect to the allegation that the rejection of record cannot be understood nor responded to, a review of the record indicates that applicant is correct that the references listed in the heading of the rejection do not correspond with the references referred to in the body of the rejection. Specifically, the rejection of record states that claim 20 is rejected as being unpatentable over Lange et al in view of Bieg et al while the beginning of the explanation of the rejection refers to "Fisher et al". Applicant also pointed to several reference numerals used in the rejection to further evidence that the rejection could not be understood. Besides the reference to "Fisher et al" being a typographical error on the part of the examiner, it is noted that confusion as to what reference was being relied upon was compounded by the failure of the Office to include the marked-up attachment referred to with the rest of the Office action papers.

MPEP 710.06 sets forth when the reply period will be reset or restarted in situations where the citation of a reference is incorrect or the Office action contains some other error that affects applicant's ability to reply to the Office action. In particular, the error must be brought to the attention of the Office and it must be brought to the attention of the Office prior to expiration of the period for reply set in the Office action.

A review of the record reveals that this error was not brought to the attention of the Office until a telephone communication on November 7, 2005. The Final Rejection was mailed on July 28, 2005 and set a shortened statutory period for reply of three months. The three-month period for reply expired on October 28, 2005. Thus, applicant did not bring this error to the attention of the Office until *after* the expiration of the period for reply set in the Office action. In accordance with MPEP 710.06, the period for reply *will not* be restarted and any appropriate extension fee will be required to render a reply timely.[1]

In view of the above, the Office action mailed July 28, 2005 was properly made final and will not be withdrawn.

Donald T. Hajec, Director
Technology Center 3600
(571) 272-5150
Facsimile No.: (571) 273-8300

KJD/DS: 1/11/06

[1] As an aside on this matter, it is noted that the examiner included a complete Office action, with the marked-up attachment, with the interview summary mailed November 14, 2005.

UNITED STATES PATENT AND TRADEMARK OFFICE

Commissioner for Patents
United States Patent and Trademark Office
P.O. Box 1450
Alexandria, VA 22313-1450
www.uspto.gov

McNair Law Firm, P.A.
Post Office Box 10827
Greenville SC 29603-0827

COPY MAILED
APR 10 2006
OFFICE OF PETITIONS

In re Application of :
Lang, et al. :
Application No. 10/323,702 : ON PETITION
Filed: December 18, 2002 :
Attorney Docket No. LMX-146 :
For: LINKAGE ARRANGEMENT FOR THE ADJUSTMENT OF REARVIEW MIRRORS

This is a decision on the petition under 37 CFR 1.137(b), filed on March 2, 2006 to revive the above-identified application.

This application became abandoned for failure to properly respond to the final Office action mailed July 28, 2005, which set an extendable three month period for reply. The pertinent history is as follows: Petitioners obtained a three month extension of time and submitted a RCE without an amendment on January 27, 2006. On February 3, 2006, the Office mailed a Notice of Improper Request for Continued Examination (RCE). The time period for response continued to run from the mail date of the final Office action. Accordingly, this application became abandoned on January 29, 2006. The filing of the present petition precedes the mailing of a Notice of Abandonment.

Applicants have submitted a RCE and required fee and amendment in reply to the July 28, 2005 final Office action, an acceptable statement of the unintentional nature of the delay in responding to the July 28, 2005 final Office action, and the petition fee.[1]

The petition is **GRANTED**.

[1] The statement of unintentional delay was not signed by a person who would have been in a position of knowing that the delay in filing a timely response was unintentional. In the event that practitioner has no knowledge that the delay was in fact unintentional, practitioner should make a reasonable inquiry to ascertain that, in fact, the delay was unintentional. If practitioner discovers that the delay was intentional, practitioner must so notify the Office.

After the mailing of this decision the application will be forwarded to Technology Center A.U. 3679 for consideration of the RCE and amendment filed on February 9, 2006.

Telephone inquiries pertaining to this decision may be directed to the undersigned at (571) 272-3230.

E. Shirene Willis
Senior Petitions Attorney
Office of Petitions

PTO/SB/66 (03-09)
Approved for use through 03/31/2012. OMB 0651-0016
U.S. Patent and Trademark Office: U.S. DEPARTMENT OF COMMERCE
Under the Paperwork Reduction Act of 1995, no persons are required to respond to a collection of information unless it displays valid OMB control number.

PETITION TO ACCEPT UNINTENTIONALLY DELAYED PAYMENT OF MAINTENANCE FEE IN AN EXPIRED PATENT (37 CFR 1.378(c))

Patent Number	Issue Date (YYYY-MM-DD)	Application Number	Filing Date (YYYY-MM-DD)	Docket Number (if applicable)
6968998	2005-11-29	10323715	2002-12-18	52072-7177

CAUTION: Maintenance fee (and surcharge, if any) payment must correctly identify: (1) the patent number and (2) the application number of the actual U.S. application leading to issuance of that patent to ensure the fee(s) is/are associated with the correct patent. 37 CFR 1.366(c) and (d).

SMALL ENTITY

☒ Patentee claims, or has previously claimed, small entity status. See 37 CFR 1.27.

LOSS OF ENTITLEMENT TO SMALL ENTITY STATUS

☐ Patentee is no longer entitled to small entity status. See 37 CFR 1.27(g)

NOT Small Entity			Small Entity		
	Fee	Code		Fee	Code
○	3 ½ year	(1551)	◉	3 ½ year	(2551)
○	7 ½ year	(1552)	○	7 ½ year	(2552)
○	11 ½ year	(1553)	○	11 ½ year	(2553)

SURCHARGE

The surcharge required by 37 CFR 1.20(i)(2) (Fee Code 1558) must be paid as a condition of accepting unintentionally delayed payment of the maintenance fee.

MAINTENANCE FEE (37 CFR 1.20(e)-(g))

The appropriate maintenance fee must be submitted with this petition.

STATEMENT

THE UNDERSIGNED CERTIFIES THAT THE DELAY IN PAYMENT OF THE MAINTENANCE FEE TO THIS PATENT WAS UNINTENTIONAL

PETITIONER(S) REQUEST THAT THE DELAYED PAYMENT OF THE MAINTENANCE FEE BE ACCEPTED AND THE PATENT REINSTATED

THIS PORTION MUST BE COMPLETED BY THE SIGNATORY OR SIGNATORIES

37 CFR 1.378(d) states: "Any petition under this section must be signed by an attorney or agent registered to practice before the Patent and Trademark Office, or by the patentee, the assignee, or other party in interest."

I certify, in accordance with 37 CFR 1.4(d)(4) that I am

◉ An attorney or agent registered to practice before the Patent and Trademark Office

○ A sole patentee

○ A joint patentee; I certify that I am authorized to sign this submission on behalf of all the other patentees.

○ A joint patentee; all of whom are signing this e-petition

○ The assignee of record of the entire interest

Patent Practitioner			
A signature of the applicant or representative is required in accordance with 37 CFR 1.33 and 10.18. Please see 37 CFR 1.4(d) for the form of the signature			
Signature	/Roger H. Stein/	Date (YYYY-MM-DD)	2010-05-27
Name	Roger H. Stein	Registration Number	31882

This collection of information is required by 37 CFR 1.378(c). The information is required to obtain or retain a benefit by the public which is to file (and by the USPTO to process) an application. Confidentiality is governed by 35 U.S.C. 122 and 37 CFR 1.11 and 1.14. This collection is estimated to take 1 hour to complete, including gathering, preparing, and submitting the completed application form to the USPTO. Time will vary depending upon the individual case. Any comments on the amount of time you require to complete this form and/ or suggestions for reducing this burden, should be sent to the Chief Information Officer, U.S. Patent and Trademark Office, U.S. Department of Commerce, P.O. Box 1450, Alexandria, VA 22313-1450. DO NOT SEND FEES OR COMPLETED FORMS TO THIS ADDRESS. **This form can only be used when in conjunction with EFS-Web. If this form is mailed to the USPTO, it may cause delays in reinstating the patent.**

Privacy Act Statement

The Privacy Act of 1974 (P.L. 93-579) requires that you be given certain information in connection with your submission of the attached form related to a patent application or patent. Accordingly, pursuant to the requirements of the Act, please be advised that: (1) the general authority for the collection of this information is 35 U.S.C. 2(b)(2); (2) furnishing of the information solicited is voluntary; and (3) the principal purpose for which the information is used by the U.S. Patent and Trademark Office is to process and/or examine your submission related to a patent application or patent. If you do not furnish the requested information, the U.S. Patent and Trademark Office may not be able to process and/or examine your submission, which may result in termination of proceedings or abandonment of the application or expiration of the patent.

The information provided by you in this form will be subject to the following routine uses:

1. The information on this form will be treated confidentially to the extent allowed under the Freedom of Information Act (5 U.S.C. 552) and the Privacy Act (5 U.S.C. 552a). Records from this system of records may be disclosed to the Department of Justice to determine whether the Freedom of Information Act requires disclosure of these records.

2. A record from this system of records may be disclosed, as a routine use, in the course of presenting evidence to a court, magistrate, or administrative tribunal, including disclosures to opposing counsel in the course of settlement negotiations.

3. A record in this system of records may be disclosed, as a routine use, to a Member of Congress submitting a request involving an individual, to whom the record pertains, when the individual has requested assistance from the Member with respect to the subject matter of the record.

4. A record in this system of records may be disclosed, as a routine use, to a contractor of the Agency having need for the information in order to perform a contract. Recipients of information shall be required to comply with the requirements of the Privacy Act of 1974, as amended, pursuant to 5 U.S.C. 552a(m).

5. A record related to an International Application filed under the Patent Cooperation Treaty in this system of records may be disclosed, as a routine use, to the International Bureau of the World Intellectual Property Organization, pursuant to the Patent Cooperation Treaty.

6. A record in this system of records may be disclosed, as a routine use, to another federal agency for purposes of National Security review (35 U.S.C. 181) and for review pursuant to the Atomic Energy Act (42 U.S.C. 218(c)).

7. A record from this system of records may be disclosed, as a routine use, to the Administrator, General Services, or his/her designee, during an inspection of records conducted by GSA as part of that agency's responsibility to recommend improvements in records management practices and programs, under authority of 44 U.S.C. 2904 and 2906. Such disclosure shall be made in accordance with the GSA regulations governing inspection of records for this purpose, and any other relevant (i.e., GSA or Commerce) directive. Such disclosure shall not be used to make determinations about individuals.

8. A record from this system of records may be disclosed, as a routine use, to the public after either publication of the application pursuant to 35 U.S.C. 122(b) or issuance of a patent pursuant to 35 U.S.C. 151. Further, a record may be disclosed, subject to the limitations of 37 CFR 1.14, as a routine use, to the public if the record was filed in an application which became abandoned or in which the proceedings were terminated and which application is referenced by either a published application, an application open to public inspections or an issued patent.

9. A record from this system of records may be disclosed, as a routine use, to a Federal, State, or local law enforcement agency, if the USPTO becomes aware of a violation or potential violation of law or regulation.

UNITED STATES PATENT AND TRADEMARK OFFICE

Commissioner for Patents
United States Patent and Trademark Office
P.O. Box 1450
Alexandria, VA 22313-1450
www.uspto.gov

In re Patent No. 6968998
Issue Date: November 29,2005
Application No. 10323715
Filed: December 18,2002
Attorney Docket No. 1199 P 177

:
:DECISION GRANTING PETITION
:UNDER 37 CFR 1.378(c)
:

This is a decision on the electronic petition, filed May 27,2010 ,under 37 CFR 1.378(c) to accept the unintentionally delayed payment of the 3.5 year maintenance fee for the above-identified patent.

The petition is **GRANTED**.

The maintenance fee is accepted, and the above-identified patent reinstated as of May 27,2010 . This decision also constitutes notice that the fee has been accepted. An electronic copy of the petition and this decision has been created as an entry in the Image File Wrapper. Nevertheless, petitioner should print and retain an independent copy.

Telephone inquiries related to this electronic decision should be directed to the Electronic Business Center at 1-866-217-9197.

UNITED STATES PATENT AND TRADEMARK OFFICE

Commissioner for Patents
United States Patent and Trademark Office
P.O. Box 1450
Alexandria, VA 22313-1450
www.uspto.gov

AUG 20 2004

In re Application of KUSASE ET AL.
Appl. No.: 10/323,730
Filed: December 20, 2002
For: GENERATOR MOTOR HAVING INDUCTOR ROTOR

WITHDRAWAL FROM ISSUE
37 CFR 1.313

The purpose of this communication is to inform you that the above identified application is being withdrawn from issue pursuant to 37 CFR 1.313.

The application is being withdrawn to permit reopening of prosecution. The reasons therefor will be communicated to you by the examiner.

U.S. Patent and Trademark Office records reveal that the issue fee and the publication fee have not been paid. If the issue fee and the publication fee have been submitted, the applicant may request a refund, or may request that the fee be credited to a deposit account. However, applicant may wait until the application is either again found allowable or held abandoned. If the application is allowed, upon receipt of a new Notice of Allowance and Fees Due, applicant may request that the previously submitted issue fee and publication fee be applied toward payment of the issue fee and publication fee in the amount identified on the new Notice of Allowance and Issue and Publication Fee Due. If the application is abandoned, applicant may request either a refund or a credit to a specified Deposit Account.

The application is being forwarded to the examiner for action.

Howard Goldberg
Director
Patent Examining Technology Center 2800

POSZ & BETHARDS, PLC
11250 ROGER BACON DRIVE
SUITE 10
RESTON, VA 20190

UNITED STATES PATENT AND TRADEMARK OFFICE

Commissioner for Patents
United States Patent and Trademark Office
P.O. Box 1450
Alexandria, VA 22313-1450
www.uspto.gov

AUG 20 2004

In re Application of KUSASE ET AL.
Appl. No.: 10/323,730
Filed: December 20, 2002
For: GENERATOR MOTOR HAVING INDUCTOR ROTOR

WITHDRAWAL FROM ISSUE
37 CFR 1.313

The purpose of this communication is to inform you that the above identified application is being withdrawn from issue pursuant to 37 CFR 1.313.

The application is being withdrawn to permit reopening of prosecution. The reasons therefor will be communicated to you by the examiner.

U.S. Patent and Trademark Office records reveal that the issue fee and the publication fee have not been paid. If the issue fee and the publication fee have been submitted, the applicant may request a refund, or may request that the fee be credited to a deposit account. However, applicant may wait until the application is either again found allowable or held abandoned. If the application is allowed, upon receipt of a new Notice of Allowance and Fees Due, applicant may request that the previously submitted issue fee and publication fee be applied toward payment of the issue fee and publication fee in the amount identified on the new Notice of Allowance and Issue and Publication Fee Due. If the application is abandoned, applicant may request either a refund or a credit to a specified Deposit Account.

The application is being forwarded to the examiner for action.

Howard Goldberg
Director
Patent Examining Technology Center 2800

POSZ & BETHARDS, PLC
11250 ROGER BACON DRIVE
SUITE 10
RESTON, VA 20190

RECEIVED
NOV - 1 2004
OIPE/JCWS

UNITED STATES PATENT AND TRADEMARK OFFICE

Commissioner for Patents
United States Patent and Trademark Office
P.O. Box 1450
Alexandria, VA 22313-1450
www.uspto.gov

OBLON SPIVAK McCLELLAND
MAIER & NEUSTADT PC
1940 DUKE STREET
ALEXANDRIA, VA 22314

COPY MAILED

DEC 0 8 2005

OFFICE OF PETITIONS

In re Application of :
Hideki Kobayashi et al :
Application No. 10/323,792 : DECISION GRANTING PETITION
Filed: December 20, 2002 : UNDER 37 CFR 1.313(c)(2)
Attorney Docket No. 232027US2SRD :

This is a decision on the petition, filed December 7, 2005, under 37 CFR 1.313(c)(2) to withdraw the above-identified application from issue after payment of the issue fee.

The petition is **GRANTED**.

The above-identified application is withdrawn from issue for consideration of a submission under 37 CFR 1.114 (request for continued examination). See 37 CFR 1.313(c)(2).

Petitioner is advised that the issue fee paid on November 2, 2005 in the above-identified application cannot be refunded. If, however, the above-identified application is again allowed, petitioner may request that it be applied towards the issue fee required by the new Notice of Allowance.[1]

Telephone inquiries should be directed to the undersigned at (571) 272-3218.

This matter is being referred to Technology Center AU 2123 for processing of the request for continued examination under 37 CFR 1.114 and for consideration of the Information Disclosure Statement.

Frances Hicks
Petitions Examiner
Office of Petitions

---

[1] *The request to apply the issue fee to the new Notice may be satisfied by completing and returning the new Issue Fee Transmittal Form PTOL-85(b) (along with any balance due at the time of payment), which includes the following language thereon: "Commissioner for Patents is requested to apply the Issue Fee and Publication Fee (if any) or re-apply any previously paid issue fee to the application identified above." Petitioner is advised that, whether a fee is indicated as being due or not, the Issue Fee Transmittal Form* ***must*** *be completed and timely submitted to avoid abandonment. Note the language in bold text on the first page of the Notice of Allowance and Fee(s) Due (PTOL-85).*

UNITED STATES PATENT AND TRADEMARK OFFICE

Commissioner for Patents
United States Patent and Trademark Office
P.O. Box 1450
Alexandria, VA22313-1450
www.uspto.gov

BAKER & HOSTETLER LLP
WASHINGTON SQUARE
SUITE 1100
1050 CONNECTICUT AVENUE, N.W.
WASHINGTON DC 20036

COPY MAILED

APR 12 2007

OFFICE OF PETITIONS

In re Application of
Kurt Raichle
Application No. 10/323,805
Filed: December 20, 2002
Attorney Docket No. 87354.3180

ON PETITION

This is a decision on the petition filed October 21, 2004, to withdraw the holding of abandonment under 37 CFR 1.181, in accordance with the reasoning of the decision in Delgar Inc. v. Schuyler, 172 USPQ 513.

The petition under 37 CFR 1.181(b) is **DISMISSED.**

This application became abandoned April 9, 2004 for failure to timely reply to the Restriction Requirement mailed March 8, 2004, which set a one month period for reply. No response having been filed, a Notice of Abandonment was mailed October 8, 2004.

The file record discloses that the Restriction Requirement was mailed to what was believed to be the address of record. However, petitioner contends that it was not received. In support of this contention, petitioner indicates that the log file shows no record of receipt and provides copies of the mail room log file from March 9, 2004 to June 8, 2004.

Unfortunately, the requirement under 37 CFR 1.181, that copies of the actual docket records or file jacket be provided, has not been met. In a petition under 37 CFR 1.181 the petitioner must show, as in this instance where non-receipt is claimed that petitioner is without fault in not receiving the communication. In the absence of any irregularity in the mailing, there is a strong presumption that the Office action was properly mailed to the address of record. This presumption may be overcome by a showing that the Office action was not in fact received at the address of record.

The statements and the mail room log file are not enough to substantiate the claim of non-receipt and no other corroborating evidence to prove non-receipt has been

presented. In view thereof, the holding of abandonment cannot be withdrawn.

ALTERNATIVE VENUES

Petitioner may wish to consider filing a renewed petition under 37 CFR 1.137(a)[1] or 37 CFR 1.137(b),[2] which now provides that where the delay in reply was unintentional, a petition may be filed to revive an abandoned application or a lapsed patent pursuant to 37 CFR 1.137(b).

The filing of a petition under the unintentional standard cannot be intentionally delayed and therefore should be filed promptly. A person seeking revival due to unintentional delay cannot make a statement that the delay was unintentional unless the entire delay, including the delay from the date it was discovered that the application was abandoned until the filing of the petition to revive under 37 CFR 1.137(b), was unintentional. A statement that the delay was unintentional is not appropriate if

---

[1]A grantable petition under 37 CFR 1.137(a) must be accompanied by:

(1) the required reply, unless previously filed; In a nonprovisional application abandoned for failure to prosecute, the required reply may be met by the filing of a continuing application. In a nonprovisional utility or plant application filed on or after June 8, 1995, and abandoned for failure to prosecute, the required reply may also be met by the filing of a request for continued examination in compliance with § 1.114. In an application or patent, abandoned or lapsed for failure to pay the issue fee or any portion thereof, the required reply must be the payment of the issue fee or any outstanding balance thereof.

(2) the petition fee as set forth in 37 CFR 1.17(l);

(3) a showing to the satisfaction of the Commissioner that the entire delay in filing the required reply from the due date for the reply until the filing of a grantable petition pursuant to 37 CFR 1.137(a) was unavoidable; and

(4) any terminal disclaimer (and fee as set forth in 37 CFR 1.20(d)) required pursuant to 37 CFR 1.137(c)).

[2]Effective December 1, 1997, the provisions of 37 CFR 1.137(b) now provide that where the delay in reply was unintentional, a petition may be filed to revive an abandoned application or a lapsed patent pursuant to 37 CFR 1.137(b). A grantable petition filed under the provisions of 37 CFR 1.137(b) must be accompanied by:

(1) the required reply, unless previously filed. In a nonprovisional application abandoned for failure to prosecute, the required reply may be met by the filing of a continuing application. In a nonprovisional application filed on or after June 8, 1995, and abandoned for failure to prosecute, the required reply may also be met by the filing of a request for continued examination in compliance with § 1.114. In an application or patent, abandoned or lapsed for failure to pay the issue fee or any portion thereof, the required reply must be the payment of the issue fee or any outstanding balance thereof. In an application abandoned for failure to pay the publication fee, the required reply must include payment of the publication fee.

(2) the petition fee as set forth in 37 CFR 1.17(m);

(3) a statement that the entire delay in filing the required reply from the due date for the reply until the filing of a grantable petition pursuant to 37 CFR 1.137(b) was unintentional. The Commissioner may required additional information where there is a question whether the delay was unintentional; and

(4) any terminal disclaimer (and fee as set forth in 37 CFR 1.20(d)) required pursuant to 37 CFR 1.137(c)).

petitioner intentionally delayed the filing of a petition for revival under 37 CFR 1.137(b).

Further correspondence with respect to this matter should be addressed as follows:

By mail: Mail Stop Petition
Commissioner for Patents
P.O. Box 1450
Alexandria, VA 22313-1450

By FAX: (571) 273-8300

Telephone inquiries concerning this matter may be directed to the undersigned Petitions Attorney at (571) 272-3212.

Patricia Faison-Ball

Patricia Faison-Ball
Senior Petitions Attorney
Office of Petitions

UNITED STATES PATENT AND TRADEMARK OFFICE

Commissioner for Patents
United States Patent and Trademark Office
P.O. Box 1450
Alexandria, VA 22313-1450
www.uspto.gov

BAKER & HOSTETLER LLP
WASHINGTON SQUARE
SUITE 1100
1050 CONNECTICUT AVENUE, N.W.
WASHINGTON DC 20036

COPY MAILED

JUL 27 2007

OFFICE OF PETITIONS

ON PETITION

In re Application of
Kurt Raichle
Application No. 10/323,805
Filed: December 20, 2002
Attorney Docket No. 87354.3180

This is a decision on the renewed petition filed June 22, 2007, to withdraw the holding of abandonment under 37 CFR 1.181, in accordance with the reasoning of the decision in Delgar Inc. v. Schuyler, 172 USPQ 513.

The petition under 37 CFR 1.181(b) is **DISMISSED.**

This application became abandoned April 9, 2004 for failure to timely reply to the Restriction Requirement mailed March 8, 2004, which set a one month period for reply. No response having been filed, a Notice of Abandonment was mailed October 8, 2004. A petition to withdraw the holding of abandonment was filed October 21, 2004 but was dismissed in a decision mailed April 12, 2007 because while the the file record disclosed that the Restriction Requirement was mailed to what was believed to be the address of record, petitioner contended that it was not received. However, petitioner only included a copy of the mail room log file and not a copy of the docket.

Although the file jacket has been provided with the instant petition as a showing that the Office action was not in fact received at the address of record, the requirement under 37 CFR 1.181 is for copies of the actual docket records. Please review MPEP 711.03.

In view thereof, the holding of abandonment cannot be withdrawn.

Petitioner may wish to consider filing a renewed petition under 37 CFR 1.137(a)[1] or 37

[1]A grantable petition under 37 CFR 1.137(a) must be accompanied by:

(1) the required reply, unless previously filed; In a nonprovisional application abandoned for failure to prosecute, the required reply may be met by the filing of a continuing application. In a nonprovisional utility or plant application filed on or after June 8, 1995, and abandoned for failure to prosecute, the required reply may also be met by the filing of a request for continued examination in compliance with § 1.114. In an application or patent, abandoned or lapsed for failure to pay the issue fee or any portion thereof, the required reply must be the payment of the issue fee or any outstanding balance thereof.

(2) the petition fee as set forth in 37 CFR 1.17(l);

(3) a showing to the satisfaction of the Commissioner that the entire delay in filing the required reply from

CFR 1.137(b),[2] which now provides that where the delay in reply was unintentional, a petition may be filed to revive an abandoned application or a lapsed patent pursuant to 37 CFR 1.137(b).

The filing of a petition under the unintentional standard cannot be intentionally delayed and therefore should be filed promptly. A person seeking revival due to unintentional delay cannot make a statement that the delay was unintentional unless the entire delay, including the delay from the date it was discovered that the application was abandoned until the filing of the petition to revive under 37 CFR 1.137(b), was unintentional. A statement that the delay was unintentional is not appropriate if petitioner intentionally delayed the filing of a petition for revival under 37 CFR 1.137(b).

Further correspondence with respect to this matter should be addressed as follows:

By mail: Mail Stop Petition
Commissioner for Patents
P.O. Box 1450
Alexandria, VA 22313-1450

By FAX: (571) 273-8300

Telephone inquiries concerning this matter may be directed to the undersigned Petitions Attorney at (571) 272-3212.

Patricia Faison-Ball
Senior Petitions Attorney
Office of Petitions

---

the due date for the reply until the filing of a grantable petition pursuant to 37 CFR 1.137(a) was unavoidable; and
(4) any terminal disclaimer (and fee as set forth in 37 CFR 1.20(d)) required pursuant to 37 CFR 1.137(c)).

[2]Effective December 1, 1997, the provisions of 37 CFR 1.137(b) now provide that where the delay in reply was unintentional, a petition may be filed to revive an abandoned application or a lapsed patent pursuant to 37 CFR 1.137(b). A grantable petition filed under the provisions of 37 CFR 1.137(b) must be accompanied by:

(1) the required reply, unless previously filed. In a nonprovisional application abandoned for failure to prosecute, the required reply may be met by the filing of a continuing application. In a nonprovisional application filed on or after June 8, 1995, and abandoned for failure to prosecute, the required reply may also be met by the filing of a request for continued examination in compliance with § 1.114. In an application or patent, abandoned or lapsed for failure to pay the issue fee or any portion thereof, the required reply must be the payment of the issue fee or any outstanding balance thereof. In an application abandoned for failure to pay the publication fee, the required reply must include payment of the publication fee.

(2) the petition fee as set forth in 37 CFR 1.17(m);

(3) a statement that the entire delay in filing the required reply from the due date for the reply until the filing of a grantable petition pursuant to 37 CFR 1.137(b) was unintentional. The Commissioner may required additional information where there is a question whether the delay was unintentional; and

(4) any terminal disclaimer (and fee as set forth in 37 CFR 1.20(d)) required pursuant to 37 CFR 1.137(c)).

UNITED STATES PATENT AND TRADEMARK OFFICE

Commissioner for Patents
United States Patent and Trademark Office
P.O. Box 1450
Alexandria, VA22313-1450
www.uspto.gov

BAKER & HOSTETLER LLP
WASHINGTON SQUARE
SUITE 1100
1050 CONNECTICUT AVENUE, N.W.
WASHINGTON DC 20036

COPY MAILED

SEP 17 2007

OFFICE OF PETITIONS

In re Application of
Kurt Raichle
Application No. 10/323,805
Filed: December 20, 2002
Attorney Docket No. 87354.3180

ON PETITION

This is a decision on the second renewed petition filed August 29, 2007, to withdraw the holding of abandonment under 37 CFR 1.181, in accordance with the reasoning of the decision in Delgar Inc. v. Schuyler, 172 USPQ 513.

The petition under 37 CFR 1.181(b) is **GRANTED.**

This application became abandoned April 9, 2004 for failure to timely reply to the Restriction Requirement mailed March 8, 2004, which set a one month period for reply. No response having been filed, a Notice of Abandonment was mailed October 8, 2004. A petition to withdraw the holding of abandonment was filed October 21, 2004 but was dismissed in a decision mailed April 12, 2007 because while the file record disclosed that the Restriction Requirement was mailed to what was believed to be the address of record, petitioner contended that it was not received. However, with the original petition, petitioner only included a copy of the mail room log file and not a copy of the docket. On the renewed petition filed June 22, 2007, the file jacket was provided as a showing that the Office action was not in fact received at the address of record, but the requirement under 37 CFR 1.181 is for copies of the actual docket records in accordance with MPEP 711.03, thus the petition was dismissed in a decision mailed July 27, 2007.

Comes now petitioner with copies of the docket report, wherein receipt of the Restriction Requirement mailed March 8, 2004 would have been filed, had it been received. To show that the Notice mailed November February 11, 2005 was not received, petitioner also explains that after searching the docket and file wrapper it was concluded that no correspondence was received for this matter from the USPTO,

In that the statement from the petitioner and the exhibit from the docket record for the instant matter show no entry indicating receipt of the Restriction Requirement, it is apparent that it was not received. The evidence submitted corroborates non-receipt of the Restriction Requirement at the address of record. Accordingly, the holding of

abandonment is withdrawn and no petition fee is due.

Technology Center 2855 for a re-mailing of the Restriction Requirement originally mailed March 8, 2004.

Telephone inquiries concerning this matter should be directed to the undersigned Petitions Attorney at (571) 272-3212.

Patricia Faison-Ball
Senior Petitions Attorney
Office of Petitions

UNITED STATES PATENT AND TRADEMARK OFFICE

COMMISSIONER FOR PATENTS
UNITED STATES PATENT AND TRADEMARK OFFICE
P.O. BOX 1450
ALEXANDRIA, VA 22313-1450
www.uspto.gov

In re Application of ENDERS ET AL.	:	
Appl. No.: 10/232,805	:	
Filed: August 30, 2002	:	**DECISION *SUA SPONTE***
For: SUPPLY LINE STRUCTURE FOR TRANSMITTING INFORMATION BETWEEN MOTOR-VEHICLE COMPONENTS	:	**WITHDRAWING HOLDING OF ABANDONMENT**

This is a decision, *sua sponte*, withdrawing the holding of abandonment of the above-identified application.

A final Office Action was mailed on January 8, 2007, setting a three-month shortened statutory period for response thereto. In an apparent failure to receive a response, the application was held abandoned and a Notice of Abandonment was mailed on August 8, 2007.

Although no petition or request to withdraw the holding of abandonment in this application has been filed, the Notice of abandonment is hereby vacated, and the holding of abandonment withdrawn. The application is restored to pending and under appeal status in view of the fact that a Notice of Appeal was timely filed on May 10, 2007, followed by a timely filed appeal brief on October 12, 2007. The Office regrets any inconvenience caused by this matter.

The application file is being forwarded to the technical support staff for processing of the Notice of Appeal and the Appeal Brief. The file will then be returned to the Examiner for consideration of the Appeal Brief.

Any inquiry regarding this decision should be directed to Michael Sherry at (571) 272-2084.

Janice A. Falcone
Director
Patent Examining Technology Center 2800

KENYON & KENYON LLP
ONE BROADWAY
NEW YORK, NY 10004

UNITED STATES PATENT AND TRADEMARK OFFICE

Commissioner for Patents
United States Patent and Trademark Office
P.O. Box 1450
Alexandria, VA 22313-1450
www.uspto.gov

WESTERMAN HATTORI DANIELS & ADRIAN
1250 CONNECTICUT AVENUE, NW
SUITE 700
WASHINGTON, DC 20036

COPY MAILED

OCT 27 2004

OFFICE OF PETITIONS

In re Application of :
Bernd E. Maile :
Application No. 10/323,817 : ON PETITION
Filed: December 20, 2002 :
Attorney Docket No. 021676 :

This is a decision on the petition, filed October 26, 2004, under 37 CFR 1.313(c)(2) to withdraw the above-identified application from issue after payment of the issue fee.

The petition is **GRANTED**.

The above-identified application is withdrawn from issue for consideration of a submission under 37 CFR 1.114 (request for continued examination). See 37 CFR 1.313(c)(2).

Petitioner is advised that the issue fee paid on July 7, 2004 in the above-identified application cannot be refunded. If, however, the above-identified application is again allowed, petitioner may request that it be applied towards the issue fee required by the new Notice of Allowance.[1]

The correspondence filed October 26, 2004 is not signed by an attorney of record. However, in accordance with 37 CFR 1.34(a), the signature of John P. Kong appearing on the correspondence shall constitute a representation to the United States Patent and Trademark Office that he is authorized to represent the particular party in whose behalf he acts.

Telephone inquiries should be directed to Wan Laymon at (571) 272-3220.

This matter is being referred to Technology Center AU 2822 for processing of the request for continued examination under 37 CFR 1.114.

Wan Laymon
Petitions Examiner
Office of Petitions
Office of the Deputy Commissioner
for Patent Examination Policy

[1] The request to apply the issue fee to the new Notice may be satisfied by completing and returning the new Issue Fee Transmittal Form PTOL-85(b), which includes the following language thereon: "Commissioner for Patents is requested to apply the Issue Fee and Publication Fee (if any) or re-apply any previously paid issue fee to the application identified above." Petitioner is advised that, whether a fee is indicated as being due or not, the Issue Fee Transmittal Form **must** be completed and timely submitted to avoid abandonment. Note the language in bold text on the first page of the Notice of Allowance and Fee(s) Due (PTOL-85).

UNITED STATES DEPARTMENT OF COMMERCE
Patent and Trademark Office
ASSISTANT SECRETARY OF COMMERCE AND
COMMISSIONER OF PATENTS AND TRADEMARKS
Washington, DC 20231

11/17/08

Patent No. :7250494
Inventor(s) : Jeffrey Stinson
Issued : 7/31/2007
Title : OPSONIC MONOCLONAL AND CHIMERIC ANTIBODIES SPECIFIC FOR LIPOTEICHOIC ACID OF GRAM POSTIVE BACTERIA
Atty.doc./File No.

Request for Certificates of Correction

Consideration has been given to your request for the issuance of a Certificate of Correction, for the above – identified patent under the provisions of CFR 1.322.

Inspection of the application for the patent reveals that claim 13 line 20 is printed in accordance with the record. Therefore being no fault on the Patent and Trademark Office, It has no authority to issue a certificate of correction under the provision of 1.322.

In view of the forgoing, your request in this matter, is hereby denied.

Future written correspondence concerning this matter should be filed and directed to Decisions & Certificates of Correction Branch.

Henry Randall
Cecelia Newman
Decisions & Certificates
of Correction Branch
(703) 308-9390 Ext. 108

LAHIVE & COCKFIELD LLP
ONE POST OFFICE SQUARE
BOSTON, MASSACHUSETTS

HR/CBN

UNITED STATES PATENT AND TRADEMARK OFFICE

Commissioner for Patents
United States Patent and Trademark Office
P.O. Box 1450
Alexandria, VA 22313-1450
www.uspto.gov

SEED INTELLECTUAL PROPERTY LAW GROUP PLLC
701 FIFTH AVENUE, SUITE 6300
SEATTLE, WA 98104-7092

COPY MAILED

SEP 2 7 2004

OFFICE OF PETITIONS

In re Application of :
Giorgio de Santi et al :
Application No. 10/323,961 : DECISION GRANTING PETITION
Filed: December 18, 2002 : UNDER 37 CFR 1.313(c)(2)
Attorney Docket No. 853063.448C1 :

This is a decision on the petition, filed September 24, 2004, under 37 CFR 1.313(c)(2) to withdraw the above-identified application from issue after payment of the issue fee.

The petition is **GRANTED**.

The above-identified application is withdrawn from issue for consideration of a submission under 37 CFR 1.114 (request for continued examination). See 37 CFR 1.313(c)(2).

Petitioner is advised that the issue fee paid on September 17, 2004 in the above-identified application cannot be refunded. If, however, the above-identified application is again allowed, petitioner may request that it be applied towards the issue fee required by the new Notice of Allowance.[1]

Telephone inquiries should be directed to the undersigned at (703) 305-8680.

This matter is being referred Technology Center AU 2811 for processing of the request for continued examination under 37 CFR 1.114 and for consideration of the concurrently filed Information Disclosure Statement.

Frances Hicks
Petitions Examiner
Office of Petitions
Office of the Deputy Commissioner
for Patent Examination Policy

---

[1] *The request to apply the issue fee to the new Notice may be satisfied by completing and returning the new Issue Fee Transmittal Form PTOL-85(b), which includes the following language thereon: "Commissioner for Patents is requested to apply the Issue Fee and Publication Fee (if any) or re-apply any previously paid issue fee to the application identified above." Petitioner is advised that, whether a fee is indicated as being due or not, the Issue Fee Transmittal Form **must** be completed and timely submitted to avoid abandonment. Note the language in bold text on the first page of the Notice of Allowance and Fee(s) Due (PTOL-85).*

UNITED STATES PATENT AND TRADEMARK OFFICE

COMMISSIONER FOR PATENTS
UNITED STATES PATENT AND TRADEMARK OFFICE
P.O. BOX 1450
ALEXANDRIA, VA 22313-1450
WWW.USPTO.GOV

Paper No. 6

FENWICK & WEST LLP
SILICON VALLEY CENTER
801 CALIFORNIA STREET
MOUNTAIN VIEW CA 94041

COPY MAILED

AUG 3 0 2004

OFFICE OF PETITIONS

In re Application of:
Terrence V. Layng et al.

Application No. 10/323,964
Filed: December 18, 2002
Attorney Docket No. 23427-07272
Title: TEACHING METHOD AND SYSTEM

DECISION ON PETITIONS UNDER 37 C.F.R. §§1.137(A) AND 1.181(A)

This is a decision on the petitions concurrently filed June 21, 2004, pursuant to 37 C.F.R. §§1.137(a) to revive the above-identified application, and 1.181(a) to withdraw the holding of abandonment[1].

The above-identified application became abandoned for failure to reply in a timely manner to the Notice of Missing Parts (notice), mailed February 27, 2003, which set a shortened statutory period for reply of two (2) months. No response was received, and no extensions of time under the provisions of 37 C.F.R. §1.136(a) were requested. Accordingly, the above-identified application became abandoned on April 28, 2003. A Notice of Abandonment was mailed June 1, 2004.

Considering the facts and circumstances of the delay at issue, as set forth on petition, it is concluded that Petitioner has met his burden of establishing that the holding of abandonment should be withdrawn.

Accordingly, the petition under 37 C.F.R. §1.181(a) is **GRANTED**. The holding of abandonment is **WITHDRAWN**.

The petition under 37 C.F.R. §1.137(a) is **DISMISSED AS MOOT**.

The application file is being forwarded to Technology Center 2600 for further processing of the drawings submitted with the instant petitions.

Telephone inquiries regarding this decision should be directed to the undersigned at (703) 305-0011. Please note that on approximately September 28, 2004, the Office of Petitions will relocate to the new PTO location in Alexandria. Although the mailing address will remain the same, the general phone number for the Office of Petitions which should be used for status requests will change to 571-272-3282, and the telephone number for the undersigned will change to 571-272-3225.

Paul Shanoski
Senior Attorney
Office of Petitions
United States Patent and Trademark Office

1 The fee associated with the petition under 37 C.F.R. §1.137(a) has not been charged to petitioner's Deposit Account.

UNITED STATES PATENT AND TRADEMARK OFFICE

COMMISSIONER FOR PATENTS
UNITED STATES PATENT AND TRADEMARK OFFICE
P.O. BOX 1450
ALEXANDRIA, VA 22313-1450
www.uspto.gov

FENWICK & WEST LLP
SILICON VALLEY CENTER
801 CALIFORNIA STREET
MOUNTAIN VIEW, CA 94041

COPY MAILED

MAY 23 2007

OFFICE OF PETITIONS

In re Patent No. 7,152,034 :
Issue Date: December 19, 2006 :
Application No. 10/323,964 : DECISION ON PETITION
Filed: December 18, 2002 :
Attorney Docket No. 23427-07272 :

This is a decision on the petition under 37 CFR 1.182, filed March 22, 2007, requesting issuance of a duplicate Letters Patent for the above-identified patent.

The petition is **GRANTED**.

The Publishing Division is directed to issue a duplicate Letters Patent.

Telephone inquiries concerning this decision may be directed to the undersigned at (571) 272-3218. Inquiries regarding the issuance of a duplicate Letters Patent may be directed Krystal Paige in the Publishing Division at (703) 308-9250, Ext. 139.

A copy of this decision is being faxed to Publishing Division for issuance of a duplicate Letters Patent.

Frances Hicks
Petitions Examiner
Office of Petitions

cc: Krystal Paige, South Tower, 8th Floor (Fax No. (571) 270-9937

UNITED STATES PATENT AND TRADEMARK OFFICE

Commissioner for Patents
United States Patent and Trademark Office
P.O. Box 1450
Alexandria, VA 22313-1450
www.uspto.gov

Paper No. 12

PATENT LAW GROUP LLP
2635 NORTH FIRST STREET
SUITE 223
SAN JOSE CA 95134

FEB 3 2005

In re Application of:
Hideaki Tsuchiko
Serial No.: 10/323,965
Filed: December 17, 2002
For: INTEGRATED CIRCUIT INCLUDING HIGH VOLTAGE DEVICES AND LOW VOLTAGE DEVICES

DECISION ON PETITION

This is a decision on the petition filed October 7, 2004, via facsimile transmission, requesting that the holding of abandonment in the above-identified application be withdrawn.

The petition is GRANTED.

A non-final Office action was mailed January 9, 2004, setting a three-month shortened statutory period for filing a response. In the apparent absence of a response, the application was held abandoned and a Notice of Abandonment was mailed September 30, 2004.

Petitioner asserts that a response was timely filed. To support the assertion, petitioner has submitted: 1) a copy of a response entitled "Response to Office Action" which bears a Certificate of Transmission under 37 C.F.R. § 1.8(a) dated March 2, 2004, 2) a copy of a Transmission Verification Report indicating that 9 (nine) pages were transmitted on March 2, 2004 to a USPTO number, 3) a copy of an Auto-Reply Facsimile Transmission from the USPTO acknowledging receipt of 9 (nine) pages of transmission on March 2, 2004, and 4) a statement in support of the petition under 37 C.F.R. § 1.8(b) signed by attorney Carmen C. Cook.

The file record does not include the nine-page transmission submitted on March 22, 2004.

The petition satisfies the conditions for accepting a response filed using a certificate of transmission under 37 C.F.R. § 1.8(a) but lost after having being received by the USPTO. Accordingly, the petition is granted.

The Notice of Abandonment mailed September 21, 2004 is hereby vacated and the holding of abandonment withdrawn.

The copy of the amendment submitted on October 7, 2004 with the petition is accepted since the USPTO has apparently lost the response originally submitted.

The technical support staff will process the amendment and the examiner will prepare an appropriate action in response to the amendment.

James Dwyer, Director
Technology Center 2800
Semiconductors, Electrical and Optical
Systems and Components

UNITED STATES PATENT AND TRADEMARK OFFICE

Commissioner for Patents
United States Patent and Trademark Office
P.O. Box 1450
Alexandria, VA 22313-1450
www.uspto.gov

GARTH JANKE
BIRDWELL JANKE & DURANDO
1100 SW SIXTH AVENUE
SUITE 1400
PORTLAND, OR 97204

COPY MAILED

SEP 2 2 2005

OFFICE OF PETITIONS

In re Application of	:	
John L. Earle	:	
Application No. 10/323,966	:	ON PETITION
Filed: December 18, 2002	:	
Attorney Docket No. P 1030.12005	:	

This is a decision on the petition under 37 CFR 1.137(b), filed August 22, 2005, to revive the above-identified application.

The petition is **GRANTED**.

The above-identified application became abandoned for failure to reply in a timely manner to the non-final Office action mailed February 10, 2004, which set a shortened statutory period for reply of three (3) months. No extensions of time under the provisions of 37 CFR 1.136(a) were obtained. Accordingly, the above-identified application became abandoned on May 11, 2005.

Telephone inquiries concerning this decision should be directed to Wan Laymon at (571) 272-3220.

This matter is being referred to Technology Center AU 2862.

Wan Laymon
Petitions Examiner
Office of Petitions
Office of the Deputy Commissioner
for Patent Examination Policy

UNITED STATES PATENT AND TRADEMARK OFFICE

COMMISSIONER FOR PATENTS
UNITED STATES PATENT AND TRADEMARK OFFICE
P.O. BOX 1450
ALEXANDRIA, VA 22313-1450
www.uspto.gov

Paper No. 5

FINNEGAN, HENDERSON, FARABOW,
GARRETT & DUNNER LLP
1300 I STREET, NW
WASHINGTON, DC 20005

COPY MAILED

MAY 2 9 2003

OFFICE OF PETITIONS

In re Application of	:	
Devore et al.	:	
Application No. 10/323,975	:	DECISION GRANTING
Filed: December 20, 2002	:	PETITION
Attorney Docket No. 1435-123-1	:	

This is a decision on the petition filed April 7, 2003 to establish that pages 138 to 145 of the specification were part of the originally filed application.

On December 20, 2002, the application was filed.

On March 4, 2003, the Office of Initial Patent Examination mailed a Notice stating that the application had been accorded a filing date of December 20, 2002, and advising applicants that pages 138 to 144 of the specification appeared to have been omitted. Page 145 filed on December 20, 2002, is present in the file.

In response to the Notice, the present petition was filed alleging that pages 138 to 145 were deposited on December 20, 2002. In support, petitioner has submitted a postcard receipt which acknowledges receipt of "Copy of original specification w/ Claims and Abstract (145 pgs.)" on December 20, 2002.[1] The file only contains 138 pages of specification. Therefore, the evidence is convincing that the application papers deposited on December 20, 2002, included pages 138 to 144, and that these pages were subsequently misplaced in the PTO.

In view of the above, the petition is **granted**.

The petition fee will be credited to petitioner's deposit account.

The Notice mailed March 4, 2003, is vacated to the extent the Notice stated pages 138 to 144 were omitted.

The Application is being returned to the Office of Initial Patent Examination for further processing with a filing date of December 20, 2002 using the corrected application papers filed on April 7, 2003.

---

[1] Evidence of receipt of any correspondence filed in the Patent and Trademark Office can be obtained by submitting a self addressed post card properly itemizing and identifying the paper or papers being filed. Upon receipt of the correspondence, the Patent and Trademark Office will check the listing on the post card against the papers submitted, making sure that all items listed are present and will then stamp the postcard with an Official date stamp and place the post card in the outgoing mail. "A post card receipt which itemizes and properly identifies the papers which are being filed serves as *prima facie* evidence of receipt in the PTO of all items listed thereon by the PTO." M.P.E.P. § 503.

Telephone inquiries should be directed to Petitions Attorney Steven Brantley at (703) 306-5683.

Beverly M. Flanagan
Supervisory Petitions Examiner
Office of Petitions

UNITED STATES PATENT AND TRADEMARK OFFICE

COMMISSIONER FOR PATENTS
UNITED STATES PATENT AND TRADEMARK OFFICE
WASHINGTON, D.C. 20231
www.uspto.gov

Paper No. 4

Geoffrey R. Myers
Hall Priddy Myers & Vande Sande
10220 River Road
Suite 200
Potomac, MD 20854

COPY MAILED

APR 07 2003

OFFICE OF PETITIONS

In re Application of :
Smiley, et al. :
Application No. 10/324,028 : DECISION REFUSING STATUS
Filed: December 20, 2002 : UNDER 37 CFR 1.47(a)
Atty. Dkt. No.: 2500.508 :
For: ADJUSTABLE OPTICAL ATTENUATOR :

This is in response to the petition under 37 CFR 1.47(a), filed December 20, 2002.

The petition is **DISMISSED**.

Rule 47 applicant is given TWO MONTHS from the mailing date of this decision to reply, correcting the below-noted deficiencies. Any reply should be entitled "Request for Reconsideration of Petition under 37 CFR 1.47(a)," and should only address the deficiencies noted below, except that the reply may include an oath or declaration executed by the non-signing inventor. Failure to respond will result in abandonment of the application. Any extensions of time will be governed by 37 CFR 1.136(a).

The above-identified reissue application and petition under 37 CFR 1.47 were filed December 20, 2002.

A grantable petition under 37 CFR 1.47(a) requires: (1) proof that the non-signing inventor cannot be reached or refuses to sign the oath or declaration after having been presented with the application papers (specification, claims and drawings); (2) an acceptable oath or declaration in compliance with 35 USC 115 and 116; (3) the petition fee; and (4) a statement of the last known address of the non-signing inventor.

As to item (2) set forth above, an acceptable oath or declaration for the reissue patent application in compliance with 37 CFR 1.63 and 37 CFR 1.64 has not been presented. The declaration presented with the instant petition is not acceptable as it fails to set forth the entire inventive entity. Specifically, the declaration submitted, while executed by the available inventor, fails to identify the non-signing inventor by name, residence, mailing address, and citizenship.

Any renewed petition should be accompanied by an executed oath or declaration in full compliance with the requirements of 37 CFR 1.63.

As to item (3), the required petition fee has been charged to Deposit Account No. 50-1465 as authorized in the application transmittal form accompanying the instant application.

Further correspondence with respect to this matter should be

addressed as follows:

By mail: Commissioner for Patents
Box DAC
Washington, DC 20231

By FAX: (703) 308-6916
Attn: Office of Petitions

By hand: Crystal Plaza Four, Suite 3C23
2201 S. Clark Place
Arlington, VA

Telephone inquiries related to this decision may be directed to the undersigned at (703) 305-0310.

Alesia M. Brown
Petitions Attorney
Office of Petitions
Office of the Deputy Commissioner
for Patent Examination Policy

UNITED STATES PATENT AND TRADEMARK OFFICE

COMMISSIONER FOR PATENTS
UNITED STATES PATENT AND TRADEMARK OFFICE
WASHINGTON, D.C. 20231
www.uspto.gov

Paper No. 7

Geoffrey R. Myers
Hall Priddy Myers & Vande Sande
10220 River Road
Suite 200
Potomac, MD 20854

COPY MAILED

APR 1 8 2003

OFFICE OF PETITIONS

In re Application of :
Smiley, et al. :
Application No. 10/324,028 : DECISION GRANTING STATUS
Filed: December 20, 2002 : UNDER 37 CFR 1.47(a)
Atty. Dkt. No.: 2500.508 :
For: ADJUSTABLE OPTICAL ATTENUATOR :

This is in response to the renewed petition under 37 CFR 1.47(a), filed April 16, 2003.

The petition is **GRANTED**.

Petitioner has shown that despite diligent effort to do so, inventor John O. Smiley cannot be reached or located to sign the declaration for the above-referenced application.

The above-identified application and papers have been reviewed and found in compliance with 37 CFR 1.47(a). This application is hereby accorded Rule 1.47(a) status.

As provided in Rule 1.47(c), this Office will forward notice of this application's filing to the non-signing inventor at the address given in the petition. Notice of the filing of this application will also be published in the Official Gazette.

After this decision is mailed, the above-identified application will be returned to the Office of Initial Patent Examination for further processing.

Telephone inquiries related to this decision may be directed to the undersigned at (703) 305-0310.

Alesia M. Brown
Petitions Attorney
Office of Petitions
Office of the Deputy Commissioner
for Patent Examination Policy

UNITED STATES PATENT AND TRADEMARK OFFICE

COMMISSIONER FOR PATENTS
UNITED STATES PATENT AND TRADEMARK OFFICE
WASHINGTON, D.C. 20231
www.uspto.gov

JOHN O. SMILEY
URB. CAMP D'ALT CASA N. 6
SISPONY LA MASSANA
ANDORRA

COPY MAILED

APR 1 8 2003

OFFICE OF PETITIONS

In re Application of :
Smiley, et al. :
Application No. 10/324,028 : LETTER
Filed: December 20, 2002 :
Atty. Dkt. No.: 2500.508 :
For: ADJUSTABLE OPTICAL ATTENUATOR :

Dear Sir:

You are named as an inventor in the above-identified United States patent application filed under the provisions of 35 U.S.C. 116 (United States Code) and 37 C.F.R. § 1.47(a), Rules of Practice in Patent Cases. Should a patent be granted on the application you will be designated therein as a joint inventor.

As a named inventor you are entitled to inspect any paper in the file wrapper of the application, order copies of all or any part thereof (at a prepaid cost as per 37 C.F.R. § 1.19) or make your position of record in the application. Alternatively, you may arrange to do any of the preceding through a registered patent attorney or agent presenting written authorization from you. If you care to join the application, counsel of record (see below) would presumably assist you. Joining in the application would entail the filing of an appropriate oath or declaration by you pursuant to 37 C.F.R. § 1.63.

Telephone inquiries regarding this communication should be directed to the undersigned at (703) 305-0310. Requests for information regarding your application should be directed to the File Information Unit at (703) 308-2733. Information regarding how to pay for and order a copy of the application, or a specific paper in the application, should be directed to Certification Division at (703) 308-9726 or 1-800-972-6382 (outside the Washington D.C. area).

Alesia M. Brown
Petitions Attorney
Office of Petitions
Office of the Deputy Commissioner
for Patent Examination Policy

UNITED STATES PATENT AND TRADEMARK OFFICE

Commissioner for Patents
United States Patent and Trademark Office
P.O. Box 1450
Alexandria, VA 22313-1450
www.uspto.gov

Goodwin Procter LLP
Attn: Patent Administrator
135 Commonwealth Drive
Menlo Park CA 94025-1105

MAILED

FEB 0 4 2010

OFFICE OF PETITIONS

In re Application of :
Dirk Boecker et al. :
Application No. 10/324,053 : DECISION ON PETITION
Filed: December 18, 2002 :
Attorney Docket No. PEL-2609 :

This is a decision on the petition under 37 CFR 1.182, filed January 28, 2008, and the communication filed on November 4, 2009, to change the order of the names of the inventors.

The petition is **DISMISSED**.

A petition under 37 CFR 1.182 requires a fee under 37 CFR 1.17(f) of $400. Petitioner only authorized for $130 for the payment of the petition fee; therefore, the balance of $270 was being assessed to petitioner's deposit account as authorized. However, the deposit account that was provided is closed and does not have sufficient funds to cover the $270 balance. Accordingly, the petition can not be granted at this time.

Further correspondence with respect to this matter should be delivered through one of the following mediums:

By mail:
Mail Stop PETITIONS
Commissioner for Patents
Post Office Box 1450
Alexandria, VA 22313-1450

By hand:
Customer Service Window
Mail Stop Petitions
Randolph Building
401 Dulany Street
Alexandria, VA 22314

By fax: (571) 273-8300
ATTN: Office of Petitions

By internet: EFS-Web[1]

Any questions concerning this matter may be directed to JoAnne Burke at (571) 272-4584.

JoAnne Burke
Petitions Examiner
Office of Petitions

[1] www.uspto.gov/ebc/efs_help.html (for help using EFS-Web call the Patent Electronic Business Center at (866) 217-9197)

UNITED STATES PATENT AND TRADEMARK OFFICE

Commissioner for Patents
United States Patent and Trademark Office
P.O. Box 1450
Alexandria, VA 22313-1450
www.uspto.gov

Goodwin Procter LLP
Attn: Patent Administrator
135 Commonwealth Drive
Menlo Park CA 94025-1105

MAILED

MAR 29 2010

OFFICE OF PETITIONS

In re Application of :
Dirk Boecker et al. :
Application No. 10/324,053 : DECISION ON PETITION
Filed: December 18, 2002 :
Attorney Docket No. PEL-2609 :

This is a decision on the renewed petition under 37 CFR 1.182, filed January 28, 2008, and the communication filed on February 17, 2010, to change the order of the names of the inventors.

The petition is **GRANTED**.

Office records have been corrected to reflect the change in the order of the named inventors. A corrected Filing Receipt, which sets forth the desired order of the named inventors, accompanies this decision on petition.

This application is being referred to the Office of Data Management for normal course of business.

Telephone inquiries regarding this decision should be directed to the undersigned at 571-272-4584.

JoAnne Burke
Petitions Examiner
Office of Petitions

ATTACHMENT: Corrected Filing Receipt

UNITED STATES PATENT AND TRADEMARK OFFICE

UNITED STATES DEPARTMENT OF COMMERCE
United States Patent and Trademark Office
Address: COMMISSIONER FOR PATENTS
P.O. Box 1450
Alexandria, Virginia 22313-1450
www.uspto.gov

APPLICATION NUMBER	FILING or 371(c) DATE	GRP ART UNIT	FIL FEE REC'D	ATTY.DOCKET.NO	TOT CLAIMS	IND CLAIMS
10/324,053	12/18/2002	3731	2360	PEL-2609	144	15

CONFIRMATION NO. 7800

CORRECTED FILING RECEIPT

77845
Goodwin Procter LLP
Attn: Patent Administrator
135 Commonwealth Drive
Menlo Park, CA 94025-1105

Date Mailed: 03/29/2010

Receipt is acknowledged of this non-provisional patent application. The application will be taken up for examination in due course. Applicant will be notified as to the results of the examination. Any correspondence concerning the application must include the following identification information: the U.S. APPLICATION NUMBER, FILING DATE, NAME OF APPLICANT, and TITLE OF INVENTION. Fees transmitted by check or draft are subject to collection. Please verify the accuracy of the data presented on this receipt. **If an error is noted on this Filing Receipt, please submit a written request for a Filing Receipt Correction. Please provide a copy of this Filing Receipt with the changes noted thereon. If you received a "Notice to File Missing Parts" for this application, please submit any corrections to this Filing Receipt with your reply to the Notice. When the USPTO processes the reply to the Notice, the USPTO will generate another Filing Receipt incorporating the requested corrections**

Applicant(s)

Dominique M. Freeman, La Honda, CA;
Dirk Boecker, Campbell, CA;

Assignment For Published Patent Application

Pelikan Technologies, Inc., Palo Alto, CA

Power of Attorney: The patent practitioners associated with Customer Number 77845

Domestic Priority data as claimed by applicant

This application is a CIP of 10/127,395 04/19/2002 PAT 7,025,774
and claims benefit of 60/393,706 07/01/2002
and claims benefit of 60/393,707 07/01/2002
and claims benefit of 60/422,988 11/01/2002
and claims benefit of 60/428,084 11/20/2002
and claims benefit of 60/424,429 11/06/2002

Foreign Applications

If Required, Foreign Filing License Granted: 02/28/2003

The country code and number of your priority application, to be used for filing abroad under the Paris Convention, is **US 10/324,053**

Projected Publication Date: Not Applicable

Non-Publication Request: No

Early Publication Request: No
**** SMALL ENTITY ****

Title

METHOD AND APPARATUS FOR A MULTI-USE BODY FLUID SAMPLING DEVICE WITH OPTICAL ANALYTE SENSING

Preliminary Class

600

PROTECTING YOUR INVENTION OUTSIDE THE UNITED STATES

Since the rights granted by a U.S. patent extend only throughout the territory of the United States and have no effect in a foreign country, an inventor who wishes patent protection in another country must apply for a patent in a specific country or in regional patent offices. Applicants may wish to consider the filing of an international application under the Patent Cooperation Treaty (PCT). An international (PCT) application generally has the same effect as a regular national patent application in each PCT-member country. The PCT process **simplifies** the filing of patent applications on the same invention in member countries, but **does not result** in a grant of "an international patent" and does not eliminate the need of applicants to file additional documents and fees in countries where patent protection is desired.

Almost every country has its own patent law, and a person desiring a patent in a particular country must make an application for patent in that country in accordance with its particular laws. Since the laws of many countries differ in various respects from the patent law of the United States, applicants are advised to seek guidance from specific foreign countries to ensure that patent rights are not lost prematurely.

Applicants also are advised that in the case of inventions made in the United States, the Director of the USPTO must issue a license before applicants can apply for a patent in a foreign country. The filing of a U.S. patent application serves as a request for a foreign filing license. The application's filing receipt contains further information and guidance as to the status of applicant's license for foreign filing.

Applicants may wish to consult the USPTO booklet, "General Information Concerning Patents" (specifically, the section entitled "Treaties and Foreign Patents") for more information on timeframes and deadlines for filing foreign patent applications. The guide is available either by contacting the USPTO Contact Center at 800-786-9199, or it can be viewed on the USPTO website at http://www.uspto.gov/web/offices/pac/doc/general/index.html.

For information on preventing theft of your intellectual property (patents, trademarks and copyrights), you may wish to consult the U.S. Government website, http://www.stopfakes.gov. Part of a Department of Commerce initiative, this website includes self-help "toolkits" giving innovators guidance on how to protect intellectual property in specific countries such as China, Korea and Mexico. For questions regarding patent enforcement issues, applicants may call the U.S. Government hotline at 1-866-999-HALT (1-866-999-4158).

LICENSE FOR FOREIGN FILING UNDER

Title 35, United States Code, Section 184

Title 37, Code of Federal Regulations, 5.11 & 5.15

GRANTED

The applicant has been granted a license under 35 U.S.C. 184, if the phrase "IF REQUIRED, FOREIGN FILING LICENSE GRANTED" followed by a date appears on this form. Such licenses are issued in all applications where

the conditions for issuance of a license have been met, regardless of whether or not a license may be required as set forth in 37 CFR 5.15. The scope and limitations of this license are set forth in 37 CFR 5.15(a) unless an earlier license has been issued under 37 CFR 5.15(b). The license is subject to revocation upon written notification. The date indicated is the effective date of the license, unless an earlier license of similar scope has been granted under 37 CFR 5.13 or 5.14.

This license is to be retained by the licensee and may be used at any time on or after the effective date thereof unless it is revoked. This license is automatically transferred to any related applications(s) filed under 37 CFR 1.53(d). This license is not retroactive.

The grant of a license does not in any way lessen the responsibility of a licensee for the security of the subject matter as imposed by any Government contract or the provisions of existing laws relating to espionage and the national security or the export of technical data. Licensees should apprise themselves of current regulations especially with respect to certain countries, of other agencies, particularly the Office of Defense Trade Controls, Department of State (with respect to Arms, Munitions and Implements of War (22 CFR 121-128)); the Bureau of Industry and Security, Department of Commerce (15 CFR parts 730-774); the Office of Foreign AssetsControl, Department of Treasury (31 CFR Parts 500+) and the Department of Energy.

NOT GRANTED

No license under 35 U.S.C. 184 has been granted at this time, if the phrase "IF REQUIRED, FOREIGN FILING LICENSE GRANTED" DOES NOT appear on this form. Applicant may still petition for a license under 37 CFR 5.12, if a license is desired before the expiration of 6 months from the filing date of the application. If 6 months has lapsed from the filing date of this application and the licensee has not received any indication of a secrecy order under 35 U.S.C. 181, the licensee may foreign file the application pursuant to 37 CFR 5.15(b).

UNITED STATES PATENT AND TRADEMARK OFFICE

Commissioner for Patents
United States Patent and Trademark Office
P.O. Box 1450
Alexandria, VA 22313-1450
www.uspto.gov

RAJ S. DAVE
MORRISON & FOERSTER LLP
2000 PENNSYLVANIA AVENUE, NW
SUITE 5500
WASHINGTON, DC 20006-1888

COPY MAILED

AUG 3 1 2006

OFFICE OF PETITIONS

In re Patent No. 6,825,992 :
Issue Date: November 30, 2004 :
Application No. 10/324,059 : NOTICE
Filed: December 20, 2002 :
Attorney Docket No. 495812002900 :

This is a notice regarding your request for acceptance of a fee deficiency submission under 37 CFR 1.28. On September 1, 1998, the Court of Appeals for the Federal Circuit held that 37 CFR 1.28(c) is the sole provision governing the time for correction of the erroneous payment of the issue fee as a small entity. **See DH Technology v. Synergystex International, Inc. 154 F.3d 1333, 47 USPQ2d 1865 (Fed. Cir. Sept. 1, 1998).**

The Office no longer investigates or rejects original or reissue applications under 37 CFR 1.56. **1098 Off. Gaz. Pat. Office 502 (January 3, 1989)**. Therefore, nothing in this Notice is intended to imply that an investigation was done.

Your fee deficiency submission under 37 CFR 1.28 is hereby **ACCEPTED**.

This file is no longer entitled to small entity status. Accordingly, all future fees paid in this file must be paid at the large entity rate, absent further notification from a proper party of a change in status. *See* 37 CFR 1.27(c)(2).

Inquiries related to this communication should be directed to the undersigned at (571) 272-3218.

Frances Hicks
Petitions Examiner
Office of Petitions

UNITED STATES PATENT AND TRADEMARK OFFICE

Commissioner for Patents
United States Patent and Trademark Office
P.O. Box 1450
Alexandria, VA 22313-1450
www.uspto.gov

FISH & RICHARDSON PC
P O BOX 1022
MINNEAPOLIS, MN 55440-1022

COPY MAILED

SEP 01 2006

OFFICE OF PETITIONS

In re Application of :
Thomas R. Tice et al :
Application No. 10/324,062 : DECISION ON PETITION
Filed: December 17, 2002 :
Attorney Docket No. 19604-004002 :

This is a decision on the petition under the unintentional provisions of 37 CFR 1.137(b), filed December 5, 2005, to revive the above-identified application.

The petition is **GRANTED**.

The application became abandoned for failure to reply in a timely manner to the non-final Office action mailed, December 22, 2004, which set a shortened statutory period for reply of three (3) months. No extensions of time under the provisions of 37 CFR 1.136(a) were obtained. Accordingly, the application became abandoned on March 23, 2005. A Notice of Abandonment was mailed on July 22, 2005.

The petition satisfies the requirements of 37 CFR 1.137(b) in that petitioner has supplied (1) the reply in the form of an amendment, (2) the petition fee of $750; and (3) a proper statement of unintentional delay. Accordingly, the reply to the non-final Office action of December 22, 2004 is accepted as being unintentionally delayed.

It is noted that the power of attorney by assignee received on May 15, 2006 (which is acknowledged as having been received originally by the USPTO on February 7, 2006 but not of record in the file), is improper in that it fails to satisfy the provisions of 37 CFR 3.73(b).[1] In this regard, while the

[1] The file record discloses that the Office granted a power of attorney to the firm of Fish and Richardson on February 8, 2006, based on a request for withdrawal of power of attorney December 8, 2005. However, as no power of attorney was filed by the firm of Fish and Richardson, the granting of the power of attorney thereto was improper.

power of attorney is accompanied by a copy of the assignment from Southern Research Institute to Brookwood Pharmaceuticals, Inc., the current assignee, there is no statement that the assignment has been forwarded to the Assignment Branch for Recordation or, if recorded, does not provide the reel and frame number where the recorded assignment is located. Petitioner's attention is directed to the pertinent part of 37 CFR 3.73(b), which reads:

> (b)(1) In order to request or take action in a patent or trademark matter, the assignee must establish its ownership of the patent or trademark property of paragraph (a) of this section to the satisfaction of the Director. The establishment of ownership by the assignee may be combined with the paper that requests or takes the action. Ownership is established by submitting to the Office a signed statement identifying the assignee, accompanied by either:
>
> (i) Documentary evidence of a chain of title from the original owner to the assignee (*e.g.*, copy of an executed assignment). For trademark matters only, the documents submitted to establish ownership may be required to be recorded pursuant to § 3.11 in the assignment records of the Office as a condition to permitting the assignee to take action in a matter pending before the Office. **For patent matters only, the submission of the documentary evidence must be accompanied by a statement affirming that the documentary evidence of the chain of title from the original owner to the assignee was or concurrently is being submitted for recordation pursuant to § 3.11**; or
>
> (ii) A statement specifying where documentary evidence of a chain of title from the original owner to the assignee is recorded in the assignment records of the Office (*e.g.*, reel and frame number). [Emphasis supplied.]

A review of Office assignment records indicates that the assignment was recorded on May 16, 2006. Therefore, in order for the power of attorney to now be acceptable, petitioner must provide the reel and frame number in a 37 CFR 3.73(b) statement.

The form for making the statement under 37 CFR 3.73(b) may be found on the forms page of the USPTO website (form number PTO/SB/96). For petitioner's convenience, a blank form under 37 CFR 3.73(b) accompanies this decision on petition.

Telephone inquiries concerning this decision should be directed to the undersigned at (571) 272-3218.

This application is being referred to Technology Center AU 1618 for appropriate action by the Examiner in the normal course of business on the reply received December 5, 2005.

Frances Hicks

Frances Hicks
Petitions Examiner
Office of Petitions

ATTACHMENT: Blank Statement under 37 CFR 3.73(b) (PTO/SB/96)

PTO/SB/96 (12-05)
Approved for use through 07/31/2006. OMB 0651-0031
U.S. Patent and Trademark Office; U.S. DEPARTMENT OF COMMERCE
Under the Paperwork Reduction Act of 1995, no persons are required to respond to a collection of information unless it displays a valid OMB control number.

STATEMENT UNDER 37 CFR 3.73(b)

Applicant/Patent Owner: _____

Application No./Patent No./Control No.: _____ Filed/Issue Date: _____

Entitled: _____

_____, a _____
(Name of Assignee) (Type of Assignee: corporation, partnership, university, government agency, etc.)

states that it is:

1. ☐ the assignee of the entire right, title, and interest; or

2. ☐ an assignee of less than the entire right, title and interest
(The extent (by percentage) of its ownership interest is _____%)

in the patent application/patent identified above by virtue of either:

A. ☐ An assignment from the inventor(s) of the patent application/patent identified above. The assignment was recorded in the United States Patent and Trademark Office at Reel _____, Frame _____, or a true copy of the original assignment is attached.

OR

B. ☐ A chain of title from the inventor(s), of the patent application/patent identified above, to the current assignee as follows:

1. From: _____ To: _____
The document was recorded in the United States Patent and Trademark Office at
Reel _____, Frame _____, or for which a copy thereof is attached.

2. From: _____ To: _____
The document was recorded in the United States Patent and Trademark Office at
Reel _____, Frame _____, or for which a copy thereof is attached.

3. From: _____ To: _____
The document was recorded in the United States Patent and Trademark Office at
Reel _____, Frame _____, or for which a copy thereof is attached.

☐ Additional documents in the chain of title are listed on a supplemental sheet.

As required by 37 CFR 3.73(b)(1)(i), the documentary evidence of the chain of title from the original owner to the assignee was, or concurrently is being, submitted for recordation pursuant to 37 CFR 3.11.

[NOTE: A separate copy (*i.e.*, a true copy of the original assignment document(s)) must be submitted to Assignment Division in accordance with 37 CFR Part 3, to record the assignment in the records of the USPTO. See MPEP 302.08]

The undersigned (whose title is supplied below) is authorized to act on behalf of the assignee.

_____ _____
Signature Date

_____ _____
Printed or Typed Name Telephone Number

_____
Title

This collection of information is required by 37 CFR 3.73(b). The information is required to obtain or retain a benefit by the public which is to file (and by the USPTO to process) an application. Confidentiality is governed by 35 U.S.C. 122 and 37 CFR 1.11 and 1.14. This collection is estimated to take 12 minutes to complete, including gathering, preparing, and submitting the completed application form to the USPTO. Time will vary depending upon the individual case. Any comments on the amount of time you require to complete this form and/or suggestions for reducing this burden, should be sent to the Chief Information Officer, U.S. Patent and Trademark Office, U.S. Department of Commerce, P.O. Box 1450, Alexandria, VA 22313-1450. DO NOT SEND FEES OR COMPLETED FORMS TO THIS ADDRESS. **SEND TO: Commissioner for Patents, P.O. Box 1450, Alexandria, VA 22313-1450.**

If you need assistance in completing the form, call 1-800-PTO-9199 and select option 2.

Privacy Act Statement

The **Privacy Act of 1974 (P.L. 93-579)** requires that you be given certain information in connection with your submission of the attached form related to a patent application or patent. Accordingly, pursuant to the requirements of the Act, please be advised that: (1) the general authority for the collection of this information is 35 U.S.C. 2(b)(2); (2) furnishing of the information solicited is voluntary; and (3) the principal purpose for which the information is used by the U.S. Patent and Trademark Office is to process and/or examine your submission related to a patent application or patent. If you do not furnish the requested information, the U.S. Patent and Trademark Office may not be able to process and/or examine your submission, which may result in termination of proceedings or abandonment of the application or expiration of the patent.

The information provided by you in this form will be subject to the following routine uses:

1. The information on this form will be treated confidentially to the extent allowed under the Freedom of Information Act (5 U.S.C. 552) and the Privacy Act (5 U.S.C 552a). Records from this system of records may be disclosed to the Department of Justice to determine whether disclosure of these records is required by the Freedom of Information Act.
2. A record from this system of records may be disclosed, as a routine use, in the course of presenting evidence to a court, magistrate, or administrative tribunal, including disclosures to opposing counsel in the course of settlement negotiations.
3. A record in this system of records may be disclosed, as a routine use, to a Member of Congress submitting a request involving an individual, to whom the record pertains, when the individual has requested assistance from the Member with respect to the subject matter of the record.
4. A record in this system of records may be disclosed, as a routine use, to a contractor of the Agency having need for the information in order to perform a contract. Recipients of information shall be required to comply with the requirements of the Privacy Act of 1974, as amended, pursuant to 5 U.S.C. 552a(m).
5. A record related to an International Application filed under the Patent Cooperation Treaty in this system of records may be disclosed, as a routine use, to the International Bureau of the World Intellectual Property Organization, pursuant to the Patent Cooperation Treaty.
6. A record in this system of records may be disclosed, as a routine use, to another federal agency for purposes of National Security review (35 U.S.C. 181) and for review pursuant to the Atomic Energy Act (42 U.S.C. 218(c)).
7. A record from this system of records may be disclosed, as a routine use, to the Administrator, General Services, or his/her designee, during an inspection of records conducted by GSA as part of that agency's responsibility to recommend improvements in records management practices and programs, under authority of 44 U.S.C. 2904 and 2906. Such disclosure shall be made in accordance with the GSA regulations governing inspection of records for this purpose, and any other relevant (*i.e.*, GSA or Commerce) directive. Such disclosure shall not be used to make determinations about individuals.
8. A record from this system of records may be disclosed, as a routine use, to the public after either publication of the application pursuant to 35 U.S.C. 122(b) or issuance of a patent pursuant to 35 U.S.C. 151. Further, a record may be disclosed, subject to the limitations of 37 CFR 1.14, as a routine use, to the public if the record was filed in an application which became abandoned or in which the proceedings were terminated and which application is referenced by either a published application, an application open to public inspection or an issued patent.
9. A record from this system of records may be disclosed, as a routine use, to a Federal, State, or local law enforcement agency, if the USPTO becomes aware of a violation or potential violation of law or regulation.

UNITED STATES PATENT AND TRADEMARK OFFICE

Commissioner for Patents
United States Patent and Trademark Office
P.O. Box 1450
Alexandria, VA 22313-1450
www.uspto.gov

Ballard Spahr LLP
SUITE 1000
999 PEACHTREE STREET
ATLANTA GA 30309-3915

MAILED

MAR 22 2010

OFFICE OF PETITIONS

In re Patent No. 7,473,431 :
Tice et al. : DECISION ON REQUEST FOR
Issue Date: January 6, 2009 : RECONSIDERATION OF
Application No. 10/324,062 : PATENT TERM ADJUSTMENT
Filed: December 17, 2002 : AND NOTICE OF INTENT
Attorney Docket No. : TO ISSUE CERTIFICATE OF
02181.00983U3 : CORRECTION
Title: INJECTABLE METHADONE, :
METHADONE AND NALTREXONE, OR :
BUPRENORPHINE AND NALTREXONE :
MICROPARTICLE COMPOSITIONS AND :
THEIR USE IN REDUCING :
CONSUMPTION OF ABUSED :
SUBSTANCES :

This is a decision on the petition filed on March 6, 2009, which is being treated as a petition under 37 CFR 1.705(d) requesting that the patent term adjustment indicated on the above-identified patent be corrected to indicate that the term of the above-identified patent is extended or adjusted by five hundred forty-three (543) days. This requested correction includes, pursuant to their duty of candor and good faith to the Office, an additional period of reduction of 377 days. Patentees also dispute the 71-day reduction.

The petition to correct the patent term adjustment indicated on the above-identified patent is **GRANTED TO THE EXTENT INDICATED HEREIN.**

Patentee's calculations include 1116 days of Office delay under 37 CFR 1.702(a) and 37 CFR 1.702(b) minus 573 days under 37 CFR 1.704 for applicant delay. The net result of patentee's calculation yields 543 days.

The petition will first address patentees' candor comment. Pursuant to their duty of candor and good faith to the Office, patentees disclose that the patent term requires an additional reduction of 377 days for the abandonment of the application.

A review of the application history confirms an additional reduction for the abandonment of the application pursuant to 37 CFR § 1.704(c)(3) is required.

37 CFR 1.704(c) provides that:

> Circumstances that constitute a failure of the applicant to engage in reasonable efforts to conclude processing or examination of an application also include the following circumstances, which will result in the following reduction of the period of adjustment set forth in § 1.703 to the extent that the periods are not overlapping:
>
> (3) Abandonment of the application or late payment of the issue fee, in which case the period of adjustment set forth in §1.703 shall be reduced by the number of days, if any, beginning on the date of abandonment or the date after the date the issue fee was due and ending on the earlier of: (i) The date of mailing of the decision reviving the application or accepting late payment of the issue fee; or (ii) The date that is four months after the date the grantable petition to revive the application or accept late payment of the issue fee was filed.

In this instance the application was held abandoned on March 23, 2005 based upon the failure of applicant to file a response to the December 22, 2004 non-final Office action. A petition to revive under 37 CFR 1.137(b) was filed on December 5, 2005 and granted on September 1, 2006.

In accordance with 37 CFR 1.704(c)(3), the adjustment is properly reduced 379 days. The period of reduction commenced March 23, 2005, the date of abandonment, and ended April 5, 2006, the date that is four months after the date the grantable petition to revive the application was filed. *See*, 37 CFR 1.704(c)(3)(ii).

Patentee disputes the 71-day reduction for the submission of the "Miscellaneous Incoming Letter" dated October 28, 2008. Patentees contend the amendment could not have been presented

earlier as they were predicated on amendments made by the examiner. Further patentees state the amendment contained Applicants' response to the examiner's reasons for allowance.

A review of the record confirms that the 71-day reduction was warranted pursuant to 37 CFR 1.704 (c)(10). 37 CFR 1.704 (c)(10) provides:

> (10) Submission of an amendment under § 1.312 or other paper after a notice of allowance has been given or mailed, in which case the period of adjustment set forth in § 1.703 shall be reduced by the lesser of:
>
> i) The number of days, if any, beginning on the date the amendment under § 1.312 or other paper was filed and ending on the mailing date of the Office action or notice in response to the amendment under § 1.312 or such other paper; or
>
> (ii) Four months;

The Notice of Allowance was mailed on July 28, 2008. On October 28, 2008, patentees filed a 312 amendment, a response to the examiner's allowance, a change of status and an application data sheet (ADS). The submission of the 312 amendment even though it was contained in the response to the allowance after the mailing of the Notice of Allowance on July 28, 2008 constituted a failure to engage pursuant to 37 CFR 1.704 (c)(10). This period is 71 days, counting the number of days in the period beginning on October 28, 2008 and ending on November 17, 2008, the date of the mailing of the notice in response the amendment.

As such patentees' delay totals 646 days (98 + 379 + 13 + 85 + 71).

The patent is entitled under 37 CFR 1.702(a) to 0 days.
The period of adjustment to which the patent is entitled under 37 CFR 1.702(b) is 864 days. As the period from the filing date of the request for continued examination (RCE) to the issue date of the patent is not included in the "B" delay period, the over three year period begins on December 18, 2005 and ends on April 29, 2008, the day before the RCE was filed, and is 864 days. *See* 35 U.S.C. 154(b)(1)(B)(i).

As such the total number of days the period of adjustment under 37 CFR 1.702 must be reduced due to applicants' delay which totals 646 days.

In view thereof, the patent is entitled to an overall adjustment of 218 days (864 days under 37 CFR 1.702(b)- 646 days of applicant delay).

The application is being forwarded to the Certificates of Branch for issuance of a certificate of correction. The Office will issue a certificate of correction indicating that the term of the above-identified patent is extended or adjusted by two hundred eighteen (218) days.

The Office will *sua sponte* issue a certificate of correction. Pursuant to 37 CFR 1.322, the Office will not issue a certificate of correction without first providing assignee or patentee an opportunity to be heard. Accordingly, patentees are given **one (1) month or thirty (30) days**, whichever is longer, from the mail date of this decision to respond. No extensions of time will be granted under § 1.136.

The Office acknowledges submission of the $200.00 fee set forth in 37 CFR 1.18(e). No additional fees are required.

Telephone inquiries specific to this matter should be directed to Petitions Attorney, Charlema Grant at (571) 272-3215.

/ALESIA M. BROWN/

Alesia M. Brown
Petitions Attorney
Office of Petitions

Enclosure: Copy of DRAFT Certificate of Correction

UNITED STATES PATENT AND TRADEMARK OFFICE

CERTIFICATE OF CORRECTION

PATENT : 7,473, 431 B2

DATED : **January 6, 2009** **DRAFT**

INVENTOR(S) : Tice et al.

It is certified that error appears in the above-identified patent and that said Letters Patent is hereby corrected as shown below:

On the cover page,

[*] Notice: Subject to any disclaimer, the term of this patent is extended or adjusted under 35 USC 154(b) by 598 days

Delete the phrase "by 598 days" and insert – by 218 days--

NOTICE RE: CERTIFICATES OF CORRECTION

DATE : 4/15/05 Paper No.: _____

TO : Supervisor, Art Unit 1725

SUBJECT : Certificate of Correction Request in Patent No.: 10/324,076 B2 6,852,946

A response to the following question is requested with respect to the accompanying request for a certificate of correction.

With respect to the change(s) requested, correcting Office and/or Applicant's errors, should the patent read as shown in the certificate of correction? No new matter should be introduced, nor should the scope or meaning of the claims be changed.

PLEASE COMPLETE THIS FORM AND RETURN WITH FILE, WITHIN 7 DAYS, TO CERTIFICATES OF CORRECTION BRANCH - PK 3-915/922 PALM LOCATION 7580 - TEL. NO. 305-8309

THANK YOU FOR YOUR ASSISTANCE!

Note your decision by placing a check mark in the appropriate box below, indicating whether all changes requested in the Request for Certificate of Correction should be applied. Please specify which changes should not be applied and indicate the reason(s) for denial, in the "Comments" section below.

☑ YES ☐ NO

☑ Comments: OK to enter

Supervisor

1725

Art Unit

PTOL-306 (REV. 2/02) U.S. DEPARTMENT OF COMMERCE Patent and Trademark Office

BEST AVAILABLE COPY

UNITED STATES
PATENT AND
TRADEMARK OFFICE

Commissioner for Patents
Washington, DC 20231
www.uspto.gov

APPLICATION NUMBER	FILING/RECEIPT DATE	FIRST NAMED APPLICANT	ATTORNEY DOCKET NUMBER
10/324,117	12/20/2002	Tae-hee Kim	1293.1554

CONFIRMATION NO. 8965

21171
STAAS & HALSEY LLP
700 11TH STREET, NW
SUITE 500
WASHINGTON, DC 20001

FORMALITIES LETTER

OC000000009471219

Date Mailed: 02/04/2003

NOTICE TO FILE MISSING PARTS OF NONPROVISIONAL APPLICATION

FILED UNDER 37 CFR 1.53(b)

Filing Date Granted

Items Required To Avoid Abandonment:

An application number and filing date have been accorded to this application. The item(s) indicated below, however, are missing. Applicant is given **TWO MONTHS** from the date of this Notice within which to file all required items and pay any fees required below to avoid abandonment. Extensions of time may be obtained by filing a petition accompanied by the extension fee under the provisions of 37 CFR 1.136(a).

- The statutory basic filing fee is missing.
  Applicant must submit $ **750** *to complete the basic filing fee for a non-small entity. If appropriate, applicant may make a written assertion of entitlement to small entity status and pay the small entity filing fee (37 CFR 1.27).*
- The oath or declaration is missing.
  A properly signed oath or declaration in compliance with 37 CFR 1.63, identifying the application by the above Application Number and Filing Date, is required.
- To avoid abandonment, a late filing fee or oath or declaration surcharge as set forth in 37 CFR 1.16(e) of $130 for a non-small entity, must be submitted with the missing items identified in this letter.

Items Required To Avoid Processing Delays:

The item(s) indicated below are also required and should be submitted with any reply to this notice to avoid further processing delays.

- Additional claim fees of **$630** as a non-small entity, including any required multiple dependent claim fee, are required. Applicant must submit the additional claim fees or cancel the additional claims for which fees are due.

SUMMARY OF FEES DUE:

Total additional fee(s) required for this application is **$1510** for a Large Entity

- **$750** Statutory basic filing fee.
- **$130** Late oath or declaration Surcharge.
- Total additional claim fee(s) for this application is **$630**
  - **$378** for **21** total claims over 20 .
  - **$252** for **3** independent claims over 3 .

A copy of this notice MUST be returned with the reply.

Ruth Bekele

Customer Service Center
Initial Patent Examination Division (703) 308-1202

PART 3 - OFFICE COPY

UNITED STATES PATENT AND TRADEMARK OFFICE

COMMISSIONER FOR PATENTS
UNITED STATES PATENT AND TRADEMARK OFFICE
P.O. BOX 1450
ALEXANDRIA, VA 22313-1450
WWW.USPTO.GOV

Paper No. 6

STAAS & HALSEY LLP
700 11TH STREET, NW
SUITE 500
WASHINGTON DC 20001

COPY MAILED

MAY 30 2003

OFFICE OF PETITIONS

In re Application of
Kim & Burge
Application No. 10/324,117
Filed: December 20, 2002
Attorney Docket No. 1293.1554
For: APPARATUS FOR AND METHOD OF MEASUREMENT OF ASPHERIC SURFACES USING HOLOGRAM AND CONCAVE SURFACE

: DECISION ACCORDING STATUS
: UNDER 37 CFR 1.47(a)

This is in response to the petition under 37 CFR 1.47(a), filed May 5, 2003.

The petition under 37 CFR 1.47(a) is granted.

Petitioner has shown that the non-signing inventor, James H. Burge, has constructively refused to join in the filing of the above-identified application after having been presented with the application papers. Specifically, the declaration/statement of facts of James G. McEwen, representative of a party in interest, establishes that the inventor was mailed the application papers, including the specification, claims and drawings, but the inventor failed to respond to numerous requests that he sign the declaration. Petitioner has submitted a declaration in compliance with 37 CFR 1.63 and 1.64.

This application and papers have been reviewed and found in compliance with 37 CFR 1.47(a). This application is hereby accorded Rule 1.47(a) status.

As provided in Rule 1.47(c), this Office will forward notice of this application's filing to the non-signing inventor at the address given in the petition. Notice of the filing of this application will also be published in the Official Gazette.

After this decision is mailed, the above-identified application will be forwarded to the Office of Initial Patent Examination for further processing.

Telephone inquiries should be directed to the undersigned at (703) 308-6712.

E. Shirene Willis

E. Shirene Willis
Senior Petitions Attorney
Office of Petitions

UNITED STATES PATENT AND TRADEMARK OFFICE

COMMISSIONER FOR PATENTS
UNITED STATES PATENT AND TRADEMARK OFFICE
P.O. BOX 1450
ALEXANDRIA, VA 22313-1450
WWW.USPTO.GOV

DR. JAMES H. BURGE
UNIVERSITY OF ARIZONA
OPTICAL SCIENCES CENTER
MEINEL BUILDING
1630 EAST UNIVERSITY BOULEVARD
TUCSON AZ 85721

COPY MAILED

MAY 30 2003

OFFICE OF PETITIONS

In re Application of
Kim & Burge
Application No. 10/324,117
Filed: December 20, 2002
Attorney Docket No. 1293.1554
For: APPARATUS FOR AND METHOD OF MEASUREMENT OF ASPHERIC SURFACES USING HOLOGRAM AND CONCAVE SURFACE

Dear Mr. Burge:

You are named as a joint inventor in the above identified United States patent application, filed under the provisions of 35 U.S.C. 116 (United States Code), and 37 CFR 1.47(a), Rules of Practice in Patent Cases. Should a patent be granted on the application you will be designated therein as a joint inventor.

As a named inventor you are entitled to inspect any paper in the file wrapper of the application, order copies of all or any part thereof (at a prepaid cost per 37 CFR 1.19) or make your position of record in the application. Alternatively, you may arrange to do any of the preceding through a registered patent attorney or agent presenting written authorization from you. If you care to join the application, counsel of record (see below) would presumably assist you. Joining in the application would entail the filing of an appropriate oath or declaration by you pursuant to 37 CFR 1.63.

Requests for information regarding your application should be directed to the File Information Unit at (703)308-2733. Information regarding how to pay for and order a copy of the application, or a specific paper in the application, should be directed to Certification Division at (703)308-9726 or 1(800)972-6382 (outside the Washington D.C. area).

Telephone inquiries regarding this communication should be directed to the undersigned at (703) 308-6712.

E. Shirene Willis
Senior Petitions Attorney
Office of Petitions

ATTORNEY OF RECORD: STAAS & HALSEY LLP
700 11TH STREET, NW
SUITE 500
WASHINGTON DC 20001

UNITED STATES PATENT AND TRADEMARK OFFICE

COMMISSIONER FOR PATENTS
UNITED STATES PATENT AND TRADEMARK OFFICE
P.O. BOX 1450
ALEXANDRIA, VA 22313-1450
WWW.USPTO.GOV

AMY SHACKELFORD
512 SAVANNAH CIRCLE
O'FALLON, MISSOURI 63366

In re Application of :
Kevin Augustine, Amy Shackelford :
and Brad Davies : LETTER
Application No. 10/324,127 :
Filed: December 20, 2002 :
Attorney Docket No. 105967.00631 :
Title: FLAT TAPE CABLE SEPARATOR :

COPY MAILED
JUL 2 9 2003
OFFICE OF PETITIONS

Dear Ms. Shackelford:

You are named as a joint inventor in the above-identified United States patent application filed under the provisions of 35 U.S.C. 116 (United States Code) and 37 CFR 1.47(a), Rules of Practice in Patent Cases. Should a patent be granted on the application you will be designated therein as a joint inventor.

As a named inventor you are entitled to inspect any paper in the file wrapper of the application, order copies of all or any part thereof (at a prepaid cost per 37 CFR 1.19) or make your position of record in the application. Alternatively, you may arrange to do any of the preceding through a registered patent attorney or agent presenting written authorization from you. If you care to join the application, counsel of record (see below) would presumably assist you. Joining in the application would entail the filing of an appropriate oath or declaration by you pursuant to 37 CFR 1.63. However, no action on your part is required for this patent to issue with you as a named inventor.

Telephone inquiries regarding this communication should be directed to Petitions Attorney Nancy Johnson at (703) 305-0309. Requests for information regarding your application should be directed to the File Information Unit at (703) 308-2733. Information regarding how to pay for and order a copy of the application, or a specific paper in the application, should be directed to the Certification Division at (703) 308-9726 or 1-800-972-6382 (outside the Washington D.C. area).

Nancy Johnson
Petitions Attorney
Office of Petitions

MICHAEL C. GREENBAUM
BLANK ROME LLP
600 NEW HAMPSHIRE AVENUE, N.W.
WASHINGTON, DC 20037

UNITED STATES PATENT AND TRADEMARK OFFICE

COMMISSIONER FOR PATENTS
UNITED STATES PATENT AND TRADEMARK OFFICE
P.O. BOX 1450
ALEXANDRIA, VA 22313-1450
WWW.USPTO.GOV

Paper No. 5

BLANK ROME LLP
600 NEW HAMPSHIRE AVENUE, N.W.
WASHINGTON, DC 20037

COPY MAILED

JUL 2 9 2003

OFFICE OF PETITIONS

In re Application of :
Kevin Augustine, Amy Shackelford :
and Brad Davies :
Application No. 10/324,127 :
Filed: December 20, 2002 :
Attorney Docket No. 105967.00631 :
Title: FLAT TAPE CABLE SEPARATOR :

DECISION ACCORDING STATUS
UNDER 37 CFR § 1.47(a)

This is a decision on the "Petition for Filing under 37 CFR § 1.47(a)," filed July 3, 2003.

The petition is **GRANTED**.

The above-identified application was filed on December 20, 2002, with an unexecuted declaration, and missing the statutory basic filing fee. Kevin Augustine, Amy Shackelford and Brad Davies were named as joint inventors. Accordingly, on February 3, 2003, a "Notice to File Missing Parts of Nonprovisional Application" was mailed, requiring the missing items, including a surcharge for late filing. This Notice set a period for reply of two months from the mailing date of the Notice, with extensions of time obtainable under § 1.136(a).

On July 3, 2003, rule 47 applicants responded with a declaration executed by inventors Augustine and Davies on behalf of themselves and on behalf of non-signing inventor Shackelford; the statutory basic filing fee; the late surcharge under § 1.16(e); and the instant petition (and petition fee). This reply was made timely by an accompanying petition for extension of time within the third month. Rule 47 applicants maintain that status under 37 CFR 1.47 is proper because joint inventor Shackelford has refused to join in the application for patent.

A grantable petition under 37 CFR 1.47(a) requires: (1) proof that the non-signing inventor cannot be reached or refuses to

sign the oath or declaration after having been presented with the application papers (specification, claims and drawings); (2) an acceptable oath or declaration in compliance with 35 U.S.C. §§ 115 and 116; (3) the petition fee; and (4) a statement of the last known address of the non-signing inventor.

By declarations of Lori Knauf and John Yun, petitioner has shown that inventor Shackelford was presented with the application papers, but that by her conduct, in not responding, she has refused to join in the application.

The declarations filed July 3, 2003, and the petition have been reviewed and found in compliance with 37 CFR 1.47(a).

This application is hereby accorded Rule 1.47(a) status.

As provided in new Rule 1.47(c), this Office will forward notice of this application's filing to the non-signing inventor at the address given in the petition. Notice of the filing of this application will also be published in the Official Gazette.

The application file is being returned to the Office of Initial Patent Examination for completion of pre-examination processing.

Telephone inquiries regarding this decision should be directed to the undersigned at (703) 305-0309.

Nancy Johnson
Petitions Attorney
Office of Petitions

UNITED STATES PATENT AND TRADEMARK OFFICE

Commissioner for Patents
United States Patent and Trademark Office
P.O. Box 1450
Alexandria, VA 22313-1450
www.uspto.gov

Foley & Lardner, LLP
Suite 500
3000 K Street, NW
Washington, DC 20007

COPY MAILED

MAY 3 1 2007

OFFICE OF PETITIONS

In re Application of :
Andrew D. Murdin et al. :
Application No. 10/324,129 : DECISION ON PETITION
Filed: December 20, 2002 : TO WITHDRAW
Attorney Docket No. 032931-0259 : FROM RECORD
:

This is a decision on the Request to Withdraw as attorney or agent of record under 37 C.F.R. § 1.36(b), filed March 30, 2007.

The request is **NOT APPROVED** as moot.

A review of the file record indicates that all the previous powers of attorney have been revoked by the assignee, Adventis Pasteur Limited, of the patent application on March 20, 2007. Accordingly, the request to withdraw under 37 C.F.R. § 1.36(b) is moot.

Applicant is advised that a non-final rejection was mailed on February 15, 2007. Failure to timely file a proper reply within the extendable period will result in the abandonment of this application.

All future communications from the Office will be directed to the below-listed address until otherwise notified by applicant.

Telephone inquires concerning this decision should be directed to Kimberly Inabinet at 571-272- 4618.

Frances Hicks
Petitions Examiner
Office of Petitions

cc: Smart & Biggar
55 Metcalfe Street, Suite 900
Ottawa, Canada K1P 5Y6

SPE RESPONSE FOR CERTIFICATE OF CORRECTION

Paper No.: _____

DATE : 10-29-08

TO SPE OF : ART UNIT ~~1624~~ 1645

SUBJECT : Request for Certificate of Correction for Appl. No.: 10/324129 Patent No.: 7326545

Please respond to this request for a certificate of correction within 7 days.

FOR IFW FILES:

Please review the requested changes/corrections as shown in the **COCIN** document(s) in the IFW application image. No new matter should be introduced, nor should the scope or meaning of the claims be changed.

Please complete the response (see below) and forward the completed response to scanning using document code **COCX**.

FOR PAPER FILES:

Please review the requested changes/corrections as shown in the attached certificate of correction. Please complete this form (see below) and forward it with the file to:

Certificates of Correction Branch (CofC)
South Tower - 9A22
Palm Location 7580

Certificates of Correction Branch
703-308-9390 ext. 123

Thank You For Your Assistance

The request for issuing the above-identified correction(s) is hereby:
Note your decision on the appropriate box.

☒ **Approved**	**All** changes apply.
☐ **Approved in Part**	Specify below which changes **do not** apply.
☐ **Denied**	State the reasons for denial below.

Comments: _____

ROBERT MONDESI
~~SUPERVISORY PATENT EXAMINER~~

SPE **Art Unit** 1645

10/324129 C of C

TRANSMITTAL LETTER (General - Patent Issued)	Docket No. 77813-4C /slr

OIPE MAY 05 2008 PATENT & TRADEMARK OFFICE

Patentee(s): SANOFI PASTEUR LIMITED

U.S. Patent No.	Issue Date
7,326,545	February 5, 2008

Title: CHLAMYDIA ANTIGENS AND CORRESPONDING DNA FRAGMENTS AND USES THEREOF

COMMISSIONER FOR PATENTS:

Transmitted herewith is: REQUEST FOR CERTIFICATE OF CORRECTION

Applicant respectfully requests a Certificate of Correction be issued for the above-identified Patent. Please correct the omissions to the Letters Patent, as indicated on the attached Certificate of Correction and formal drawings enclosed herewith. The omissions were introduced by the USPTO and therefore no fee is submitted with this request as the omissions did not originate with the Applicant.

Certificate of Correction MAY 07 2008

- ☒ No additional fee is required.
- ☐ A check in the amount of is attached.
- ☒ The Director is hereby authorized to charge and credit Deposit Account 19-2550 as described below.
  - ☐ Charge the amount of
  - ☒ Credit any overpayment.
  - ☒ Charge any additional fee required.
- ☐ Payment by credit card. Form PTO-2038 is attached.

WARNING: Information on this form may become public. Credit card information should not be included on this form. Provide credit card information and authorization on PTO-2038.

Signature

Dated: May 2, 2008

RECEIVED-USPTO Patent Publication MAY 8 2008

Thuy H. Nguyen
Reg. No. 47,336

I hereby certify that this correspondence is being deposited with the United States Postal Service with sufficient postage as first class mail in an envelope addressed to "Commissioner for Patents, P.O. Box 1450, Alexandria, VA 22313-1450" [37 CFR 1.8(a)] on

(Date)

Signature of Person Mailing Correspondence

Typed or Printed Name of Person Mailing Correspondence

Customer No.: 07380

Tel.: (613) 232-2486
cc:

(Also Form PTO-1050)

UNITED STATES PATENT AND TRADEMARK OFFICE

CERTIFICATE OF CORRECTION

PATENT NO. : 7,326,545

DATED : February 5, 2008

INVENTOR(S) : Andrew D. Murdin, et al

It is certified that an error appears or errors appear in the above-identified patent and that said Letters Patent is hereby corrected as shown below:

In the drawings, Figure 3 has been omitted (see attached Figure 3).

In the drawings, Figure 4 has been omitted (see attached Figure 4).

MAILING ADDRESS OF SENDER (Please do not use customer number

SMART & BIGGAR
P.O. Box 2999, Station D
900 - 55 Metcalfe Street
Ottawa, Ontario
K1P 5Y6, Canada

PATENT NO. 7,326,545

No. of additional copies

RECEIVED-USPTO
Patent Publication
MAY 8 2008

P15/REV03

UNITED STATES PATENT AND TRADEMARK OFFICE

Commissioner for Patents
United States Patent and Trademark Office
P.O. Box 1450
Alexandria, VA 22313-1450
www.uspto.gov

FEB 17 2005

MILLEN WHITE ZELANO & BRANIGAN, PC
2300 CLARENDON BOULEVARD
SUITE 1400
ARLINGTON, VA 22201

In re Application of	:
Laval Chan Chun KOng et al	:
Serial No.: 10/324,140	: PETITION DECISION
Filed: December 20, 2002	:
Attorney Docket No.: PHARMA-128	:

This is in response to the petition under 37 CFR 1.144, filed November 17, 2004, requesting withdrawal of an improper restriction requirement and rejoinder of method claims.

BACKGROUND

A review of the file history shows that this application was filed under 35 U.S.C. 111 and contained claims 1-56. In a first Office action, mailed June 24, 2004, the examiner set forth a restriction requirement, as follows:

> Group I – Claims 1-41, drawn to a compound;;
> Group II – Claims 42-50, drawn to a method of treating a viral infection;
> Group III – Claims 51-52, drawn to use of a compound; and
> Group IV – Claims 53-56, drawn to a method of inhibiting viral polymerase.

The examiner indicated that Groups I-IV were directed to different inventions, namely compounds and methods of use. A further election of species was required within whichever group was elected. The examiner stated that from the species elected the examiner would review the disclosure to determine the scope of the independent invention encompassing the elected species and that all compounds falling outside the determined scope would be considered non-elected subject matter and be withdrawn from consideration. Applicants elected by telephone Group I and compound 1 on page 32 as the species. The examiner then set forth on page 9 of the Office action the definitions of each of the variables in the compound structure based on the elected species. The examiner then made a rejection of certain terms under 35 U.S.C. 112, second paragraph, and objected to the claims as containing non-elected subject matter.

Applicants replied on July 27, 2004, confirming the election of Group I, canceling claims 50 and 52, amending some claims and adding new claims 58-70.. The examiner's actions in defining

the scope of the invention which would be examined and the request to delete non-elected subject matter from the claims was vigorously traversed based on *In re Harnish*, which was likened to the instant claims. Applicants also requested rejoinder of the method claims in view of the lack of prior art applied against the compounds claims.

The examiner mailed a new non-Final Office action to applicants on November 1, 2004, maintaining the position set forth with respect to the restriction and election of species requirements. The examiner added the new compound claims to the elected group, but declined to rejoin method claims on the basis that they were not of the same scope as the compound claims. The examiner relied on statutory authority, 35 U.S.C. 121, to maintain the restriction requirement and also argued that the inventions of Groups I-IV are related to a set of structurally diverse and dissimilar compounds. The examiner withdrew the rejection under 35 U.S.C. 112, but maintained the objection to the claims as containing non-elected subject matter.

Applicants filed an amendment on November 17, 2004, which is designated as not a response to the Office action of November 1, 2004, but merely presents amended claims and adds claims 71-85. In view of applicants' statement, applicants remain under obligation to fully reply to the Office action within the time period set therein.

Applicants filed this petition with respect to the restriction requirement on November 17, 2004, requesting reversal of the examiner's decision not to rejoin method claims and require the examiner to examine the full scope of the claims. It is noted that the restriction requirement herein has not been made Final, however the examiner's action with respect to the restriction requirement has been repeated without significant modification and may thus be petitioned.

DISCUSSION

Applicants first argue for rejoinder of the non-elected method claims (Groups II- IV) with the apparently allowable compound claims (based on the fact that no prior art has been cited against them) which rejoinder the examiner has denied on the basis that the method claims are not of the same scope as the examined compound claims. However, it is noted that the method claims all depend directly or indirectly on compound claim 1 which is a genus claim. Under *In re Ochiai* method claims having the same scope as compound claims are to be rejoined with the compound claims upon allowance thereof and fully examined on the merits. This was set out by the examiner on pages 7-8 of the first Office action. Since the method claims all depend from the compound claims their scope is limited to that of the compound claims. Therefore, rejoinder is mandated when the compound claims are allowed.

Applicants address the examiner's actions with respect to the election of species and prosecution thereafter. Having identified a species for the examiner from which examination was to proceed, the examiner defined applicants' scope of claimed compounds which would be examined based on the species. (See page 9 of the first Office action.) Such is impermissible. The examiner failed to follow M.P.E.P. 809.02 and 803.02 which direct an examiner following an election of species within a generic Markush group to examine the elected species and if found free of the prior art to expand the examination to a reasonable number of additional species. If all of the examined species are found free of the prior art, the genus is considered free of the prior art and

further examined for compliance with all other applicable statutes. The examiner cannot limit applicants' claimed invention by refusing to examine the full breadth of the claim because it involves a substantial number of independent and distinct species. (See *In re Weber*, 580 F.2d 455, 198 USPQ 328 (CCPA 1978) and *In re Haas*, 580 F.2d 461, 198 USPQ 334 (CCPA 1978).) The examiner lacks authority to limit the scope of a claim without approval from applicants. (See also *In re Harnish*, 631 F.2d 716, 206 USPQ 300 (CCPA 1980); and *Ex parte Hozumi*, 3 USPQ2d 1059.) No such approval has here been given. Applicants are the only party who can modify the scope of a claimed invention, usually in response to the application of pertinent prior art.

DECISION

The petition is **GRANTED.**

As noted above, applicants are required to reply fully to the outstanding Office action following which the application will be forwarded to the examiner for further action not inconsistent with this decision. If no applicable prior art relating to the examined or any other encompassed species is found, the genus will be considered free of the prior art and further examined for compliance with all other applicable statutes.

Should there be any questions about this decision please contact William R. Dixon, Jr., by letter addressed to Director, TC 1600, at the address listed above, or by telephone at 571-272-0519 or by facsimile sent to the general Office facsimile number, 571-273-8300

Bruce M. Kisliuk
Director, Technology Center 1600

UNITED STATES PATENT AND TRADEMARK OFFICE

Paper No. 20041130

Applicant : Sudhakar, Vasudhaven et al.
Appl No.: 10/324,164
Filed: December 19, 2002

DECISION GRANTING PETITION UNDER *37 CFR 1.84*

This decision is in response to the petition filed August 30, 2004 in the above-identified application. Petitioner requests that color drawings be accepted in accordance with 37 C.F.R. 1.84.

The petition states that color drawings of Figures 8(a) and 8(b) are necessary in order to completely and accurately represent the invention.

The petition complies with 37 C.F.R. 1.84(a)(2) in that it was accompanied by (1) the appropriate fee and (2) three sets of color drawings. The specification further includes the required text language set forth in 37 C.F.R. 1.84 (a)(2)(iii).

The papers filed on August 30, 2004 fulfill the requirements set forth in 37 C.F.R. 1.84(a)(2) and the petition is GRANTED.

Marc Hoff
Supervisory Patent Examiner, Art Unit 2857
Technology Center 2800

PAUL S MADAN
MADAN, MOSSMAN & SRIRAM, PC
2603 AUGUSTA, SUITE 700
HOUSTON TX 77057-1130

UNITED STATES PATENT AND TRADEMARK OFFICE

COMMISSIONER FOR PATENTS
UNITED STATES PATENT AND TRADEMARK OFFICE
P.O. BOX 1450
ALEXANDRIA, VA 22313-1450
www.uspto.gov

FEB - 2 2004

MAILED

FEB - 2 2004

OFFICE OF THE DIRECTOR
TC 3600

Neal L. Rosenberg, Esq.
AMSTER, ROTHSTEIN & EBENSTEIN
90 Park Avenue
New York, NY 10016

Paper No. 8

In re Application of :
James Michael O'Dwyer :
Application No. 10/324,165 :
Filed: December 20, 2002 :
For: WEAPON WITH RECOIL DAMPING :

DECISION ON PETITION TO WITHDRAW THE HOLDING OF ABANDONMENT

This is a decision on applicant's letter filed November 19, 2003 which has been treated as a petition to withdrawal the holding of abandonment.

The petition is **GRANTED** in view of the following evidence of timely filing :

☒ Postcard receipt being dated June 25, 2003.

☐ USPTO return facsimile receipt dated _____, which references the application by serial number and the amendment that was filed on that date.

☐ Certificate of Mailing/Transmission signed on _____. and supported by a statement under 37 C.F.R. 1.8(b)(3).

☐ Hand Delivery Receipt of the specific documents submitted dated _____.

☐ Certificate of Transmission of CPA under 37 C.F.R. 1.6 filed on _____.

☐ Express Mail Receipt under 37 C.F.R. 1.10 dated _____.

This application is being forwarded to the Supervisory Legal Instruments Examiner for entry of the response filed with the petition, then to the examiner for prompt action on the response.

cps/1/14/04

STEVEN N. MEYERS
SPECIAL PROGRAM EXAMINER
TECHNOLOGY CENTER 3600

UNITED STATES PATENT AND TRADEMARK OFFICE

Commissioner for Patents
United States Patent and Trademark Office
P.O. Box 1450
Alexandria, VA 22313-1450
www.uspto.gov

WEYERHAEUSER COMPANY
INTELLECTUAL PROPERTY DEPT., CH 1J27
P.O. BOX 9777
FEDERAL WAY WA 98063

COPY MAILED

JUL 26 2006

OFFICE OF PETITIONS

In re Application of :
Dopps, et al. :
Application No. 10/324,167 : ON PETITION
Filed: December 19, 2002 :
Attorney Docket No. 23378B//35972B :
For: ABSORBENT COMPOSITE HAVING FIBROUS BANDS

This is a decision on the petition, filed May 5, 2006, under 37 CFR 1.137(b) to revive the above-identified application.

The petition is **dismissed**.

Any request for reconsideration of this decision must be submitted within TWO (2) MONTHS from the mail date of this decision. Extensions of time under 37 CFR 1.136(a) are permitted. The reconsideration request should include a cover letter entitled "Renewed Petition under 37 CFR 1.137(b)." Petitioner is advised that this is not a final agency decision.

The above-identified application became abandoned for failure to timely submit a reply within three (3) months of the mailing of the October 6, 2005 non-final Office action. No response being received and no extensions of time being obtained, this application became abandoned on January 7, 2006. A Notice of Abandonment was mailed on May 4, 2006.

A grantable petition pursuant to 37 CFR 1.137(b) must be accompanied by:

(1) the required reply, unless previously filed.;

(2) the petition fee as set forth in 37 CFR 1.17(m);

(3) a statement that the **entire** delay in filing the required reply from the due date for the reply until the filing of a grantable petition pursuant to 37 CFR 1.137(b) was unintentional. The Director may

require additional information where there is a question whether the delay was unintentional; and

(4) any terminal disclaimer (and fee set forth in 37 CFR 1.20(d)) required pursuant to 37 CFR 1.137(d).

The instant petition does not satisfy requirement (1) above.

The terminal disclaimer filed on May 5, 2006 is not acceptable because it is not signed by an empowered attorney. A review of the oath filed on December 19, 2002 does not reveal that Gregory J. Skoch was empowered.

The May 5, 2006 change of correspondence address will not be entered for the reason stated above. A courtesy copy of this decision will be mailed to the address listed in the change of correspondence address.

The statement of unintentional delay was not signed by a person who would have been in a position of knowing that the delay in filing a timely response was unintentional. In the event that petitioner has no knowledge that the delay was in fact unintentional, petitioner should make a reasonable inquiry to ascertain that, in fact, the delay was unintentional. If petitioner discovers that the delay was intentional, petitioner must so notify the Office.

Further correspondence with respect to this matter should be addressed as follows:

By mail: Mail Stop PETITION
Commissioner for Patents
Post Office Box 1450
Alexandria, VA 22313-1450

By hand: U.S. Patent and Trademark Office
Customer Service Window, Mail Stop Petition
Randolph Building
401 Dulany Street
Alexandria, VA 22314

By FAX: (571) 273-8300 – ATTN: Office of Petitions

Telephone inquiries concerning this decision should be directed to the undersigned at (571) 272-3230.

Shirene Willis Brantley
Senior Petitions Attorney
Office of Petitions
Office of the Deputy Commissioner
for Patent Examination Policy

CC: HOVEY WILLIAMS LLP
2405 GRAND BLVD., SUITE 400
KANSAS CITY, MO 64108

UNITED STATES PATENT AND TRADEMARK OFFICE

COMMISSIONER FOR PATENTS
UNITED STATES PATENT AND TRADEMARK OFFICE
P.O. BOX 1450
ALEXANDRIA, VA 22313-1450
www.uspto.gov
DW 07-03

Paper No. 6

DALY, CROWLEY & MOFFORD, LLP
SUITE 101
275 TURNPIKE STREET
CANTON MA 02021-2310

COPY MAILED

JUL 15 2003

OFFICE OF PETITIONS

In re Application of :
Winters et al. :
Application No. 10/324,168 : ON PETITION
Filed: 19 December, 2002 :
Attorney Docket No. ATT-090PUS :

This is a decision on the petition under 37 CFR 1.182, filed on 30 June, 2003, to change the order of the names of the inventors.

The petition is **dismissed as moot**.

37 CFR 1.41(a)(1) now defines the inventorship of a non-provisional application as that inventorship set forth in the oath or declaration filed to comply with the requirements of 37 CFR 1.63.

As the application was not filed with an executed oath or declaration, and the executed declaration filed on 19 December, 2003, correctly lists the desired order of inventors, no petition under 37 CFR 1.182 is necessary.[1] The $130.00 petition fee is therefore unnecessary and will be refunded to counsel's Deposit Account, No. 01-2745.

It is noted, however, that the declaration is defective in that it contains alterations for joint inventor Choi which have not been initialed and/or dated as is required by 37 CFR 1.52(c). A properly executed oath or declaration which complies with 37 CFR 1.67(a) and identifies the application by application number and filing date must be submitted when required by the examiner.

It is also noted that although the petition appears to state that joint inventor Luo should be the third named inventor and Win should be the sixth named inventor, the declaration filed with the petition lists joint inventor Win as the fifth named inventor and joint inventor Luo as the sixth inventor. As the

[1]It is also noted that the unsigned declaration filed with the application papers did not list Byong-Jo Kim as an inventor. However, since the executed declaration filed in the application lists him as an inventor, no petition is necessary to add Kim as an inventor.

inventorship has been determined by the executed declaration, a petition under 37 CFR 1.182, accompanied by the required petition fee, is necessary if petitioners desire to change the order of inventors.

The inventorship of the application has been corrected in accordance with the executed declaration filed on 30 June, 2003. A corrected Filing Receipt, reflecting the inventorship of the application is enclosed.

The application file is being forwarded to Office of Initial Patent Examination for further processing.

Telephone inquiries concerning this matter may be directed to the undersigned at (703) 308-6918.

D Wood

Douglas I. Wood
Senior Petitions Attorney
Office of Petitions

Encl: Corrected Filing Receipt

UNITED STATES PATENT AND TRADEMARK OFFICE

Commissioner for Patents
United States Patent and Trademark Office
P.O. Box 1450
Alexandria, VA 22313-1450
www.uspto.gov

Donald E. Stout
STOUT, UXA, BUYAN & NULLINS, LLP
4 Venture, Suite 300
Irvine, CA 92618

MAILED

DEC 28 2004

Director's Office
Group 3700

In re application of
Gremel et al.

Serial Number: 10/324176
Filed: December 19, 2002

NOTICE OF WITHDRAWAL FROM ISSUE UNDER 37 CFR. 1.313

For: **VENOUS FILTER FOR ASSISTED VENOUS RETURN**

The above-identified application is withdrawn from issue after payment of the issue fee to consider the allowance.

The above-identified applicant is hereby withdrawn from issue.

The issue fee is refundable upon written request. If, however, the application is again found allowable, the issue fee can be applied toward payment of the issue fee in the amount identified on the new Notice of Allowance and Issue Fee Due upon written request. This request and any balance due must be received on or before the due date noted in the new Notice of Allowance in order to prevent abandonment of the applicant.

Telephone inquiries should be directed to Nick Lucchesi at (571) 272-4977.

The above-identified application is being forwarded to the examiner for prompt appropriate action, including notifying applicant of the new status of this application.

John E. Kittle, Director
Technology Center 3700
(571) 272-2975

rt/ 12/28/04

UNITED STATES PATENT AND TRADEMARK OFFICE

COMMISSIONER FOR PATENTS
UNITED STATES PATENT AND TRADEMARK OFFICE
P.O. BOX 1450
ALEXANDRIA, VA 22313-1450
www.uspto.gov

Michael Best & Friedrich, LLP
100 E Wisconsin Avenue
Milwaukee, WI 53202

COPY MAILED

APR 11 2005

OFFICE OF PETITIONS

In re Application of :
Robert F. Gremel, et al. :
Application No. 10/324,176 : ON PETITION
Filed: December 19, 2002 :
Attorney Docket No. 8388.42PCON2 :

This is a decision on the petition under 37 CFR 1.137(b), filed March 7, 2005, to revive the above-identified application.

The petition is **DISMISSED AS MOOT.**

A Notice of Allowance was mailed to applicant on November 4, 2005, which set a three (3) month statutory period for paying the issue fee. The issue fee was timely paid on November 19, 2004. However, a decision withdrawing the application from issue by the Director of Technology Center 3700 was mailed on December 28, 2004 to the previous correspondence address of record. A copy of the said decision is enclosed herewith.

Since the application is not abandoned, the petition to revive is unnecessary. The petition fee of $1500 will be credited to petitioner's deposit account in due course.

Telephone inquiries concerning this decision should be directed to the undersigned at (571) 272-3223.

The application file is being referred to Technology Center 3700.

Marianne E. Jenkins
Petitions Examiner
Office of Petitions
Office of the Deputy Commissioner
for Patent Examination Policy

Enclosure: Decision mailed December 28, 2004

PTO/SB/66 (03-09)
Approved for use through 03/31/2012. OMB 0651-0016
U.S. Patent and Trademark Office: U.S. DEPARTMENT OF COMMERCE
Under the Paperwork Reduction Act of 1995, no persons are required to respond to a collection of information unless it displays valid OMB control number.

PETITION TO ACCEPT UNINTENTIONALLY DELAYED PAYMENT OF MAINTENANCE FEE IN AN EXPIRED PATENT (37 CFR 1.378(c))

Patent Number	Issue Date (YYYY-MM-DD)	Application Number	Filing Date (YYYY-MM-DD)	Docket Number (if applicable)
6918887	2005-07-19	10324176	2002-12-19	P0008113.03

CAUTION: Maintenance fee (and surcharge, if any) payment must correctly identify: (1) the patent number and (2) the application number of the actual U.S. application leading to issuance of that patent to ensure the fee(s) is/are associated with the correct patent. 37 CFR 1.366(c) and (d).

SMALL ENTITY

☐ Patentee claims, or has previously claimed, small entity status. See 37 CFR 1.27.

LOSS OF ENTITLEMENT TO SMALL ENTITY STATUS

☐ Patentee is no longer entitled to small entity status. See 37 CFR 1.27(g)

NOT Small Entity

	Fee	Code
◉	3 ½ year	(1551)
○	7 ½ year	(1552)
○	11 ½ year	(1553)

Small Entity

	Fee	Code
○	3 ½ year	(2551)
○	7 ½ year	(2552)
○	11 ½ year	(2553)

SURCHARGE

The surcharge required by 37 CFR 1.20(i)(2) (Fee Code 1558) must be paid as a condition of accepting unintentionally delayed payment of the maintenance fee.

MAINTENANCE FEE (37 CFR 1.20(e)-(g))

The appropriate maintenance fee must be submitted with this petition.

STATEMENT

THE UNDERSIGNED CERTIFIES THAT THE DELAY IN PAYMENT OF THE MAINTENANCE FEE TO THIS PATENT WAS UNINTENTIONAL

PETITIONER(S) REQUEST THAT THE DELAYED PAYMENT OF THE MAINTENANCE FEE BE ACCEPTED AND THE PATENT REINSTATED

THIS PORTION MUST BE COMPLETED BY THE SIGNATORY OR SIGNATORIES

37 CFR 1.378(d) states: "Any petition under this section must be signed by an attorney or agent registered to practice before the Patent and Trademark Office, or by the patentee, the assignee, or other party in interest."

I certify, in accordance with 37 CFR 1.4(d)(4) that I am

◉ An attorney or agent registered to practice before the Patent and Trademark Office

○ A sole patentee

○ A joint patentee; I certify that I am authorized to sign this submission on behalf of all the other patentees.

○ A joint patentee; all of whom are signing this e-petition

○ The assignee of record of the entire interest

Patent Practitioner			
A signature of the applicant or representative is required in accordance with 37 CFR 1.33 and 10.18. Please see 37 CFR 1.4(d) for the form of the signature			
Signature	/Jeffrey J. Hohenshell/	Date (YYYY-MM-DD)	2009-09-10
Name	Jeffrey J. Hohenshell	Registration Number	34109

This collection of information is required by 37 CFR 1.378(c). The information is required to obtain or retain a benefit by the public which is to file (and by the USPTO to process) an application. Confidentiality is governed by 35 U.S.C. 122 and 37 CFR 1.11 and 1.14. This collection is estimated to take 1 hour to complete, including gathering, preparing, and submitting the completed application form to the USPTO. Time will vary depending upon the individual case. Any comments on the amount of time you require to complete this form and/ or suggestions for reducing this burden, should be sent to the Chief Information Officer, U.S. Patent and Trademark Office, U.S. Department of Commerce, P.O. Box 1450, Alexandria, VA 22313-1450. DO NOT SEND FEES OR COMPLETED FORMS TO THIS ADDRESS. **This form can only be used when in conjunction with EFS-Web. If this form is mailed to the USPTO, it may cause delays in reinstating the patent.**

Privacy Act Statement

The Privacy Act of 1974 (P.L. 93-579) requires that you be given certain information in connection with your submission of the attached form related to a patent application or patent. Accordingly, pursuant to the requirements of the Act, please be advised that: (1) the general authority for the collection of this information is 35 U.S.C. 2(b)(2); (2) furnishing of the information solicited is voluntary; and (3) the principal purpose for which the information is used by the U.S. Patent and Trademark Office is to process and/or examine your submission related to a patent application or patent. If you do not furnish the requested information, the U.S. Patent and Trademark Office may not be able to process and/or examine your submission, which may result in termination of proceedings or abandonment of the application or expiration of the patent.

The information provided by you in this form will be subject to the following routine uses:

1. The information on this form will be treated confidentially to the extent allowed under the Freedom of Information Act (5 U.S.C. 552) and the Privacy Act (5 U.S.C. 552a). Records from this system of records may be disclosed to the Department of Justice to determine whether the Freedom of Information Act requires disclosure of these records.

2. A record from this system of records may be disclosed, as a routine use, in the course of presenting evidence to a court, magistrate, or administrative tribunal, including disclosures to opposing counsel in the course of settlement negotiations.

3. A record in this system of records may be disclosed, as a routine use, to a Member of Congress submitting a request involving an individual, to whom the record pertains, when the individual has requested assistance from the Member with respect to the subject matter of the record.

4. A record in this system of records may be disclosed, as a routine use, to a contractor of the Agency having need for the information in order to perform a contract. Recipients of information shall be required to comply with the requirements of the Privacy Act of 1974, as amended, pursuant to 5 U.S.C. 552a(m).

5. A record related to an International Application filed under the Patent Cooperation Treaty in this system of records may be disclosed, as a routine use, to the International Bureau of the World Intellectual Property Organization, pursuant to the Patent Cooperation Treaty.

6. A record in this system of records may be disclosed, as a routine use, to another federal agency for purposes of National Security review (35 U.S.C. 181) and for review pursuant to the Atomic Energy Act (42 U.S.C. 218(c)).

7. A record from this system of records may be disclosed, as a routine use, to the Administrator, General Services, or his/her designee, during an inspection of records conducted by GSA as part of that agency's responsibility to recommend improvements in records management practices and programs, under authority of 44 U.S.C. 2904 and 2906. Such disclosure shall be made in accordance with the GSA regulations governing inspection of records for this purpose, and any other relevant (i.e., GSA or Commerce) directive. Such disclosure shall not be used to make determinations about individuals.

8. A record from this system of records may be disclosed, as a routine use, to the public after either publication of the application pursuant to 35 U.S.C. 122(b) or issuance of a patent pursuant to 35 U.S.C. 151. Further, a record may be disclosed, subject to the limitations of 37 CFR 1.14, as a routine use, to the public if the record was filed in an application which became abandoned or in which the proceedings were terminated and which application is referenced by either a published application, an application open to public inspections or an issued patent.

9. A record from this system of records may be disclosed, as a routine use, to a Federal, State, or local law enforcement agency, if the USPTO becomes aware of a violation or potential violation of law or regulation.

UNITED STATES PATENT AND TRADEMARK OFFICE

Commissioner for Patents
United States Patent and Trademark Office
P.O. Box 1450
Alexandria, VA 22313-1450
www.uspto.gov

In re Patent No. 6918887
Issue Date: July 19,2005
Application No. 10324176
Filed: December 19,2002
Attorney Docket No. 8388.42PCON2

:
:DECISION GRANTING PETITION
:UNDER 37 CFR 1.378(c)
:

This is a decision on the electronic petition, filed September 10,2009 ,under 37 CFR 1.378(c) to accept the unintentionally delayed payment of the 3.5 year maintenance fee for the above-identified patent.

The petition is **GRANTED**.

The maintenance fee is accepted, and the above-identified patent reinstated as of September 10,2009 . This decision also constitutes notice that the fee has been accepted. An electronic copy of the petition and this decision has been created as an entry in the Image File Wrapper. Nevertheless, petitioner should print and retain an independent copy.

Telephone inquiries related to this electronic decision should be directed to the Electronic Business Center at 1-866-217-9197.

UNITED STATES PATENT AND TRADEMARK OFFICE

COMMISSIONER FOR PATENTS
UNITED STATES PATENT AND TRADEMARK OFFICE
P.O. BOX 1450
ALEXANDRIA, VA 22313-1450
www.uspto.gov

Paper No. 5

MARCUS DELGADO, SENIOR PATENT COUNSEL
BELLSOUTH INTELLECTUAL PROPERTY MANAGEMENT
CORPORA
1155 PEACHTREE STREET
SUITE 500
ATLANTA GA 30309

COPY MAILED

NOV 1 9 2003

OFFICE OF PETITIONS

In re Application of
Kreiner et al.
Application No. 10/324,179
Filed: December 19, 2002
Attorney Docket No. 36968/263494
Title: METHODS AND SYSTEMS FOR ROUTING REQUESTS USING EDGE NETWORK ELEMENTS

DECISION REFUSING STATUS UNDER 37 CFR 1.47(a)

This is in response to the petition under 37 CFR 1.47(a), filed August 15, 2003 (certificate of mailing of August 13, 2003).

The petition under 37 CFR 1.47(a) is **DISMISSED**.

Rule 47 applicant is given TWO MONTHS from the mailing date of this decision to reply, correcting the below-noted deficiencies. Any reply should be entitled "Request for Reconsideration of Petition Under 37 CFR 1.47(a)," and should address the deficiencies noted below, except that the reply may include an oath or declaration executed by the non-signing inventors. **Failure to respond will result in abandonment of the application.** Any extensions of time will be governed by 37 CFR 1.136(a).

The above-identified application was filed on December 19, 2002, without an executed oath or declaration. Accordingly, on February 13, 2003, applicant was mailed a Notice to File Missing Parts of Nonprovisional Application - Filing Date Granted, requiring an executed oath or declaration and a surcharge for its late filing. This Notice set a two-month period for reply.

In reply, applicant filed the instant petition and paid the surcharge for late filing of the declaration. To make timely this reply, applicant obtained a four-month extension of time. Accompanying the petition was a declaration executed by joint inventors Kreiner, Littrell, and Perrella, but with the signature block for joint inventor Menon left blank.

A grantable petition under 37 CFR 1.47(a) requires: (1) proof that the non-signing inventor(s) cannot be reached or refuses to sign the oath or declaration after having been presented with the application papers (specification, claims and drawings); (2) an

acceptable oath or declaration in compliance with 37 CFR 1.63; (3) the petition fee; and (4) a statement of the last known address of the non-signing inventor(s). The present petition does not satisfy requirement (2).

Applicant has failed to submit an oath or declaration in compliance with 37 CFR 1.63. Initially, the Office notes that the declaration is not acceptable because the alteration to the family name of Ron Perrella is not **initialed and dated.**[1] The Manual of Patent Examining Procedure states that it is "improper for anyone, including counsel, to alter, rewrite, or partly fill in any part of the application, including the oath or declaration, after execution of the oath or declaration by the applicant." Furthermore, the Office "will not consider whether noninitialed and/or nondated alterations were made before or after signing of the oath or declaration but will require a new oath or declaration."[2]

Additionally, the declaration does not identify Mr. Menon's residence and mailing address. The Office notes that the oath or declaration must identify "[t]he mailing address, and the residence if an inventor lives at a location which is different from where the inventor customarily receives mail, of each inventor. . . ." 37 CFR 1.63(c)(1).

To correct the deficiencies, applicant must submit a new declaration under 37 CFR 1.63 and 1.67, which identifies the entire inventive entity, the correct mailing address and residence of inventor Menon, and is signed by the signing inventors on behalf of nonsigning inventor Menon. Any new oath or declaration submitted in response to this decision should also address the uninitiated change to the family name of inventor Perrella.

Further correspondence with respect to this matter should be addressed as follows and to the attention of Senior Petitions Attorney Christina Tartera Donnell:

By mail: Commissioner for Patents
Mail Stop Petition
PO Box 1450
Alexandria, VA 22313-1450

By FAX: (703) 308-6916
Attn: Office of Petitions

(Facsimile transmissions will not be accepted by the Office of Petitions after December 1, 2003).

---

[1] "Any interlineation, erasure, cancellation or other alteration of the application papers...should be dated and initialed or signed by the applicant on the same sheet of paper." 37 CFR 1.52(c)(1).

[2] MPEP 605.04(a).

By hand: Crystal Plaza Four, Suite 3C23
2201 S. Clark Place
Arlington, VA

Telephone inquiries related to this decision may be directed to the undersigned at (703) 306-5589.

Christina Tartera Donnell

Christina Tartera Donnell
Senior Petitions Attorney
Office of Petitions

UNITED STATES PATENT AND TRADEMARK OFFICE

Commissioner for Patents
United States Patent and Trademark Office
P.O. Box 1450
Alexandria, VA 22313-1450
www.uspto.gov

C. Renee Cato
BellSouth Intellectual Property
Management Corporation
1155 Peachtree Street
Suite 500
Atlanta GA 30309

COPY MAILED

FEB 23 2005

OFFICE OF PETITIONS

In re Application of :
Kreiner et al. :
Application No. 10/324,179 : DECISION ON PETITION
Filed: December 19, 2002 :
Title: Methods and Systems for :
Routing Requests Using Edge Network :
Elements :

This is a decision on the renewed petition under 37 CFR 1.47(a), filed February 7, 2005.

This is also a decision on the petition under 37 CFR 1.137(b), filed February 7, 2005, to revive the above-identified application.

The petition under 37 CFR 1.47(a) is **granted**.

The petition under 37 CFR 1.137(b) is **granted**.

On August 15, 2003 (certificate of mailing August 13, 2003), petitioner filed a petition under 37 CFR 1.47(a), request for a four-month extension of time to reply, and a declaration executed by join inventors Kreiner, Littrell, and Perrella, but with the signature block for joint inventor Menon left blank. The petition was dismissed by the decision of November 19, 2003, because petitioner failed to submit an oath or declaration in compliance with 37 CFR 1.63. The decision set a two-month extendable period to reply. Petitioner failed to reply within the period set forth in the decision and the application became abandoned on January 20, 2004. A Notice of Abandonment was mailed on September 1, 2004.

On February 7, 2005, petitioner filed the present petitions, a new declaration executed by inventors Kreiner, Littrell and Perrella on behalf of nonsigning inventor Menon in compliance with 37 CFR 1.63, and paid the requisite fees.

Petition under 37 CFR 1.47(a)

Petitioner has shown that Jai Menon, the non-signing inventor, cannot be located after diligent efforts to contact him.

The above-identified application and papers have been reviewed and found in compliance with 37 CFR 1.47(a). This application is hereby accorded Rule 1.47(a) status. As provided in Rule 1.47(c), this Office will forward notice of this application's filing to the non-signing inventor at the address given in the present petition. Notice of the filing of this application will also be published in the Official Gazette.

Petition under 37 CFR 1.137(b)

Petitioner has met the requirements to revive the above-identified application pursuant to 37 CFR 1.137(b). Petitioner submitted the required reply, the petition fee, and made the proper statement of unintentional delay. Accordingly, the application will be restored to pending status.

The application file is being forwarded to the Office of Initial Patent Examination for further processing.

Telephone inquiries concerning this matter may be directed to the undersigned at (571) 272-3211.

Christina Tartera Donnell

Christina Tartera Donnell
Senior Petitions Attorney
Office of Petitions

UNITED STATES PATENT AND TRADEMARK OFFICE

COMMISSIONER FOR PATENTS
UNITED STATES PATENT AND TRADEMARK OFFICE
P.O. BOX 1450
ALEXANDRIA, VA 22313-1450
www.uspto.gov

MICHAELSON AND WALLACE
PARKWAY 109 OFFICE CENTER
328 NEWMAN SPRINGS ROAD
P.O. BOX 8489
RED BANK, NJ 07701

COPY MAILED

JUL 1 8 2003

OFFICE OF PETITIONS

In re Application of :
Edward Collett, Joseph D. :
Evankow and Van E. Kelly : DECISION GRANTING PETITION
Application No. 10/324,188 : UNDER 37 CFR 1.47(a)
Filed: December 20, 2002 :
Title: METHOD AND DEVICE TO CALCULATE AND DISPLAY THE TRANSFORMATION OF OPTICAL POLARIZATION STATES

This is in response to the "Petition Under 37 CFR 1.47(a)," filed June 30, 2003.

The petition is **granted**.

Petitioner has shown that the non-signing inventor has refused to join in the filing of the above-identified application.

The above-identified application and papers have been reviewed and found in compliance with 37 CFR 1.47(a). This application is hereby accorded Rule 1.47(a) status. As provided in Rule 1.47(c), this Office will forward notice of this application's filing to the non-signing inventor at the address given in the Declaration. Notice of the filing of this application will also be published in the Official Gazette.

The $130.00 petition fee has been charged to deposit account no. 13-3083.

The file is being forwarded to the Office of Initial Patent Examination for further processing.

Telephone inquiries regarding this decision should be directed to the undersigned at (703) 306-9200.

Edward J. Tannouse
Senior Petitions Attorney
Office of Petitions
United States Patent and Trademark Office

UNITED STATES PATENT AND TRADEMARK OFFICE

COMMISSIONER FOR PATENTS
UNITED STATES PATENT AND TRADEMARK OFFICE
P.O. BOX 1450
ALEXANDRIA, VA 22313-1450
www.uspto.gov

COPY MAILED

JUL 18 2003

OFFICE OF PETITIONS

EDWARD COLLETT
P.O. BOX 753
LINCROFT, NJ 07738

In re Application of
Edward Collett, Joseph D. Evankow and Van E. Kelly
Application No. 10/324,188
Filed: December 20, 2002
Title: METHOD AND DEVICE TO CALCULATE AND DISPLAY THE TRANSFORMATION OF OPTICAL POLARIZATION STATES

Dear EDWARD COLLETT:

You are named as a joint inventor in the above identified United States patent application, filed under the provisions of 35 U.S.C. 116 (United States Code), and 37 CFR 1.47(a), Rules of Practice in Patent Cases. Should a patent be granted on the application you will be designated therein as a joint inventor.

As a named inventor you are entitled to inspect any paper in the file wrapper of the application, order copies of all or any part thereof (at a prepaid cost per 37 CFR 1.19) or make your position of record in the application. Alternatively, you may arrange to do any of the preceding through a registered patent attorney or agent presenting written authorization from you. If you care to join the application, counsel of record (see below) would presumably assist you. Joining in the application would entail the filing of an appropriate oath or declaration by you pursuant to 37 CFR 1.63.

Telephone inquiries regarding this communication should be directed to Petitions Attorney Edward Tannouse at (703) 306-9200. Requests for information regarding your application should be directed to the File Information Unit at (703) 308-2733. Information regarding how to pay for and order a copy of the application, or a specific paper in the application, should be directed to Certification Division at (703) 308-9726 or 1(800) 972-6382 (outside the Washington D.C. area).

Edward J. Tannouse
Senior Petitions Attorney
Office of Petitions
United States Patent and Trademark Office

MICHAELSON AND WALLACE
PARKWAY 109 OFFICE CENTER
328 NEWMAN SPRINGS ROAD
P.O. BOX 8489
RED BANK, NJ 07701

UNITED STATES PATENT AND TRADEMARK OFFICE

Commissioner for Patents
United States Patent and Trademark Office
P.O. Box 1450
Alexandria, VA 22313-1450
www.uspto.gov
DIW Jan-07

EXXONMOBIL RESEARCH AND ENGINEERING COMPANY
P.O. BOX 900
ANNANDALE NJ 08801-0900

COPY MAILED

JAN 10 2007

OFFICE OF PETITIONS

In re Application of :
Varadaraj et al. : DECISION ON PETITION
Application No. 10/324,211 :
Filed: 20 December, 2002 :
For: RV-0208 :

This is a decision on the petition under 37 CFR 1.137(b),[1] filed on 17 October, 2006, to revive the above-identified application.

The petition is **DISMISSED**.

Any request for reconsideration of this decision must be submitted within TWO (2) MONTHS from the mail date of this decision. Extensions of time under 37 CFR 1.136(a) are permitted. The reconsideration request should include a cover letter entitled "Renewed Petition Under 37 CFR 1.137(b)." This is not a final agency decision.

This application became abandoned on 26 April, 2006, for failure to timely file a proper reply to the final Office action mailed on 25 January, 2006, which set a three (3) month shortened

---

[1] Effective December 1, 1997, the provisions of 37 CFR 1.137(b) now provide that where the delay in reply was unintentional, a petition may be filed to revive an abandoned application or a lapsed patent pursuant to 37 CFR 1.137(b). A grantable petition filed under the provisions of 37 CFR 1.137(b) must be accompanied by:

(1) the required reply, unless previously filed. In a nonprovisional application abandoned for failure to prosecute, the required reply may be met by the filing of a continuing application. In a nonprovisional application filed on or after June 8, 1995, and abandoned for failure to prosecute, the required reply may also be met by the filing of a request for continued examination in compliance with § 1.114. In an application or patent, abandoned or lapsed for failure to pay the issue fee or any portion thereof, the required reply must be the payment of the issue fee or any outstanding balance thereof. In an application abandoned for failure to pay the publication fee, the required reply must include payment of the publication fee.

(2) the petition fee as set forth in 37 CFR 1.17(m);

(3) a statement that the entire delay in filing the required reply from the due date for the reply until the filing of a grantable petition pursuant to 37 CFR 1.137(b) was unintentional. The Commissioner may required additional information where there is a question whether the delay was unintentional; and

(4) any terminal disclaimer (and fee as set forth in 37 CFR 1.20(d)) required pursuant to 37 CFR 1.137(c)).

statutory period for reply. On 23 March, 2006, an amendment after final rejection was filed. On 19 April, 2006, an Advisory Action Before the Filing of an Appeal Brief was mailed, stating that the, stating that the reply did not place the application in condition for allowance. Notice of Abandonment was mailed on 24 August, 2006.

The petition lacks the reply required by 37 CFR 1.137(b)(1).

The petition states that a reply to the final Office action is being filed with the petition, but no reply to the Office action mailed on 23 March, 2006, is located among the papers received with the petition.

The only proper reply to a final Office action is a Notice of Appeal and fee, Request for Continuing Examination and submission under 37 CFR 1.114, a continuing application, or an amendment placing the application in *prima facie* condition for allowance.

As such, any renewed petition must be accompanied by a proper reply as described above.

Further correspondence with respect to this matter should be addressed as follows:

By mail: Mail Stop Petition
Commissioner for Patents
P.O. Box 1450
Alexandria, VA 22313-1450

By FAX: (571) 273-8300
Attn: Office of Petitions

By hand: Customer Service Window
Mail Stop Petition
Randolph Building
401 Dulany Street
Alexandria, VA 22314

Telephone inquiries concerning this matter may be directed to the undersigned at (571) 272-3231.

/D Wood/

Douglas I. Wood
Senior Petitions Attorney
Office of Petitions

SPE RESPONSE FOR CERTIFICATE OF CORRECTION

Paper No.: _____

DATE : 09/30/806

TO SPE OF : ART UNIT 1763

SUBJECT : Request for Certificate of Correction for Appl. No.: **10/324213** Patent No.: **7059268**

Please respond to this request for a certificate of correction within 7 days.

Please review the requested changes/corrections as shown in the **COCIN** document(s) in the IFW application image. No new matter should be introduced, nor should the scope or meaning of the claims be changed.

Please complete the response (see below) and forward the completed response to scanning using document code **COCX**.

A Green

Angela Green
Certificates of Correction Branch
703.308.9380 ext.

Thank You For Your Assistance

The request for issuing the above-identified correction(s) is hereby:
Note your decision on the appropriate box.

- ☒ **Approved** — **All** changes apply.
- ☐ **Approved in Part** — Specify below which changes **do not** apply.
- ☐ **Denied** — State the reasons for denial below.

Comments: the corrections are approved

pl

PARVIZ HASSANZADEH
SUPERVISORY PATENT EXAMINER

1763

SPE **Art Unit**

UNITED STATES PATENT AND TRADEMARK OFFICE

UNITED STATES DEPARTMENT OF COMMERCE
United States Patent and Trademark Office
Address: COMMISSIONER FOR PATENTS
P.O. Box 1450
Alexandria, Virginia 22313-1450
www.uspto.gov

THE PROCTER & GAMBLE COMPANY
Global Legal Department - IP
Sycamore Building - 4th Floor
299 East Sixth Street
CINCINNATI, OH 45202

Mail Date: 04/21/2010

Applicant	: Shawn Christopher Pallotta	: DECISION ON REQUEST FOR
Patent Number	: 7622175	: RECALCULATION of PATENT
Issue Date	: 11/24/2009	: TERM ADJUSTMENT IN VIEW
Appliction No	: 10/324,237	: OF WYETH AND NOTICE OF INTENT TO
Filed	: 12/19/2002	: ISSUE CERTIFICATE OF CORRECTION
		:

The Request for Recalculation is **GRANTED** to the extent indicated.

The patent term adjustment has been determined to be **840** days. The USPTO will *sua sponte* issue a certificate of correction reflecting the amount of PTA days determined by the recalculation.

Prior to the issuance of the certificate of correction, the USPTO will afford patentee an opportunity to be heard and request reconsideration. Accordingly, patentee has **one month or thirty (30) days**, whichever is longer, to file a request for reconsideration of this patent term adjustment calculation. See 35 U.S.C. 154(b)(3)(B)(ii) and 37 CFR 1.322(a)(4). No extensions of time will be granted under 37 CFR 1.136.

Patentee should use document code PET.OP if electronically filing a request for reconsideration of this patent term adjustment calculation. The patentee must also include the information required by 37 CFR 1.705(b)(2) and the fee required by 37 CFR 1.18(e). If patentee does not file a timely request for reconsideration of this patent term adjustment calculation including the information required by 37 CFR 1.705(b)(2) and the fee required by 37 CFR 1.18(e), the USPTO will issue a certificate of correction reflecting the PTA determination noted above.

Patentee should be aware that in order to preserve the right to review in the United States District Court for the District of Columbia of the USPTO patent term adjustment determination, patentee must ensure that he or she also take the steps required under 35 U.S.C. 154(b)(4)(A) in a timely manner. Nothing in the request for recalculation should be construed as providing an alternative time frame for commencing a civil action under 35 U.S.C. 154(b)(4)(A).

Any questions concerning this decision should be directed to the Office of Patent Legal Administration at 571-272-7702.

UNITED STATES PATENT AND TRADEMARK OFFICE

COMMISSIONER FOR PATENTS
UNITED STATES PATENT AND TRADEMARK OFFICE
P.O. BOX 1450
ALEXANDRIA, VA 22313-1450
WWW.USPTO.GOV

Paper No. 6

ALZA CORPORATION
P O BOX 7210
INTELLECTUAL PROPERTY DEPARTMENT
MOUNTAIN VIEW CA 94039-7210

COPY MAILED

JUL 2 5 2003

OFFICE OF PETITIONS

In re Application of
Dong, Wong, Espinal & Nguyen
Application No.: 10/324,239
Filed: December 19, 2002
Attorney Docket No.: ARC 3007 R1
For: FORMULATION & DOSAGE FORM FOR THE CONTROLLED DELIVERY OF THERAPEUTIC AGENTS

DECISION REFUSING STATUS
UNDER 37 CFR 1.47(a)

This is a decision on the petition under 37 CFR 1.47(a), filed July 9, 2003 (certificate of mailing date July 3, 2003).

The petition is **DISMISSED**.

Any request for reconsideration of this decision must be submitted within TWO (2) MONTHS from the mail date of this decision. Extensions of time under 37 CFR 1.136(a) are permitted. Any response should be entitled "Request for Reconsideration of Petition Under 37 CFR 1.47(a)" and may include an oath or declaration executed by the inventor. **Failure to respond will result in abandonment of the application.**

The above-identified application was filed on December 19, 2002 without an executed oath or declaration. Accordingly, on March 4, 2003, a "Notice to File Missing Parts of Nonprovisional Application" was mailed, requiring an executed oath or declaration and a surcharge for its late filing.

In response, on July 9, 2003 (certificate of mailing date July 3, 2003), a declaration executed by 3 of 4 joint inventors, the surcharge, a request for a two month extension of time and required fee, the petition fee, and the instant petition were filed. The petition states that an assignment and declaration was mailed to non-signing inventor Espinal's last known address, but Mr. Espinal did not return the signed documents. In addition, the petition states that Mr. Espinal's phone number is not listed and all three inventors don't have his current address or phone number.

A grantable petition under 37 CFR 1.47(a) requires

(1) a petition including proof of the pertinent facts establishing that the joint inventor(s) refuses to join, or cannot be found or reached after diligent effort,
(2) a proper oath or Declaration executed by the available joint inventor(s),
(3) the fee of $130 as specified in 37 CFR § 1.17(h), and
(4) the last known address of the omitted inventor(s).

This petition lacks item (1).

As to item (1), applicants have failed to establish that Mr. Espinal has refused to sign the declaration or cannot be reached. A successful Rule 47 petition requires either (1) a clear refusal to join, whether expressly or by conduct, or (2) a showing of diligence in trying to find an unavailable inventor. The proof of the pertinent events should be made by a statement of someone with first hand knowledge of the events.

Ms. Pence, Patent Assistant working for Alza Corporation, mailed an assignment and declaration to Mr. Espinal at his last known address. It appears that Mr. Espinal was not mailed a copy of the application. The Office requires that the non-signing inventor be provided with a complete copy of the application as filed. This includes the specification with claims, drawings, if any, and a declaration. See MPEP 409.03(d).

Mr. Espinal must have the complete application in his possession in order to make an informed decision as to whether he joins in its filing. Mr. Espinal cannot make the necessary statements in the declaration -- "I have reviewed and understand..." -- without examining the application.

When petitioner can show that Mr. Espinal was mailed or received the complete application and that he either refused to sign the declaration or would not respond to the request that he sign the declaration, petitioners will have shown refusal.

Any written refusal should be included as documentary evidence in the reconsideration petition. If there is an oral refusal, the facts surrounding the refusal should be included in a declaration by a party with first hand knowledge of the refusal. If it is concluded by the 37 CFR 1.47 applicant that a non-signing inventor's conduct constitutes a refusal, all facts upon which that conclusion is based should be stated in an affidavit or declaration.

If petitioners are alleging that Mr. Espinal cannot be located, a showing of **diligence** is critical in obtaining Rule 47 status. Petitioners should engage in further efforts to locate Mr. Espinal. The following is a list of evidentiary sources that are commonly relied upon to prove inability to locate an inventor: searches of Internet databases; inquiries of local telephone directories; telegrams; and documented inquiries of last known employers. Every listed type of search need not be done. However, a diligent effort to find the inventor must be made.

Documentary evidence that supports a finding that the non-signing inventor could not be found or reached should be made part of any affidavits or declarations that fully describe the exact facts which are relied on to establish that a diligent effort was made to locate the non-signing inventor. Printed computer records would suffice.

The affidavit or declaration of facts must be signed, where at all possible, by a person having *firsthand knowledge* of the facts recited therein. Statements based on hearsay will not normally be accepted. It is important that the affidavit or declaration contain statements of fact as opposed to conclusions.

Further correspondence with respect to this matter should be addressed as follows:

By mail: Mail Stop PETITION
Commissioner for Patents
Post Office Box 1450
Alexandria, VA 22313-1450

By facsimile: (703) 308-6916
Attn: Office of Petitions

By hand: Office of Petitions
2201 South Clark Place
Crystal Plaza 4, Suite 3C23
Arlington, VA 22202

Telephone inquiries should be directed to the undersigned at (703) 308-6712.

E. Shirene Willis
Senior Petitions Attorney
Office of Petitions
Office of the Deputy Commissioner
for Patent Examination Policy

cc: ALZA CORPORATION
C/O JOHNSON & JOHNSON
ONE JOHNSON & JOHNSON PLAZA, WH3221
NEW BRUNSWICK NJ 08933

UNITED STATES PATENT AND TRADEMARK OFFICE

COMMISSIONER FOR PATENTS
UNITED STATES PATENT AND TRADEMARK OFFICE
P.O. BOX 1450
ALEXANDRIA, VA 22313-1450
WWW.USPTO.GOV

Paper No. 8

ALZA CORPORATION
P O BOX 7210
INTELLECTUAL PROPERTY DEPARTMENT
MOUNTAIN VIEW CA 94039-7210

COPY MAILED

AUG 2 9 2003

OFFICE OF PETITIONS

In re Application of
Dong, Wong, Espinal & Nguyen
Application No.: 10/324,239
Filed: December 19, 2002
Attorney Docket No.: ARC 3007 R1
For: FORMULATION & DOSAGE FORM FOR THE CONTROLLED DELIVERY OF THERAPEUTIC AGENTS

DECISION ACCORDING STATUS UNDER 37 CFR 1.47(a)

This is a decision on the reconsideration petition under 37 CFR 1.47(a), filed August 13, 2003 (certificate of mailing date August 11, 2003).

The petition is granted.

Petitioners have shown that the non-signing inventor, Steven Espinal, cannot be located. Specifically, the statement of facts of Jolanta Pence, a Patent Assistant employed by Kelly Services at Alza Corporation, a party in interest, establishes that despite diligent efforts including Internet searches, telephone directory searches, three mailings to the inventor's last known address, and inquiries of the inventor's colleagues, the inventor could not be located. Petitioners have submitted a declaration in compliance with 37 CFR 1.63 and 1.64.

This application and papers have been reviewed and found in compliance with 37 CFR 1.47(a). This application is hereby accorded Rule 1.47(a) status.

As provided in Rule 1.47(c), this Office will forward notice of this application's filing to the non-signing inventor at the address given in the petition. Notice of the filing of this application will also be published in the Official Gazette.

After this decision is mailed, the above-identified application will be forwarded to the Office of Initial Patent Examination for further processing.

Telephone inquiries should be directed to the undersigned at (703) 308-6712.

E. Shirene Willis

E. Shirene Willis
Senior Petitions Attorney
Office of Petitions

UNITED STATES PATENT AND TRADEMARK OFFICE

Commissioner for Patents
United States Patent and Trademark Office
P.O. Box 1450
Alexandria, VA 22313-1450
www.uspto.gov

DEWIPAT INCORPORATED
P.O. BOX 1017
CYPRESS TX 77410-1017

COPY MAILED

FEB 21 2008

In re Application of	:	
Dong et al.	:	
Application No. 10/324,239	:	DECISION ON PETITION
Filed: December 19, 2002	:	
Attorney Docket No. ARC 3007 R1	:	

This is a decision on the petition under the unintentional provisions of 37 CFR 1.137(b), filed January 22, 2008, to revive the above-identified application.

The petition is **GRANTED**.

The petition satisfies the requirements of 37 CFR 1.137(b) in that petitioner has supplied (1) the reply in the form of a Request for Continued Examination (RCE) and an Amendment, (2) the petition fee, and (3) a proper statement of unintentional delay.

Telephone inquiries concerning this decision should be directed to the undersigned at (571) 272-3206.

This matter is being referred to Technology Center 1615 for processing of the Request for Continued Examination under 37 CFR 1.114 filed with the instant petition.

Liana Walsh
Petitions Examiner
Office of Petitions

UNITED STATES PATENT AND TRADEMARK OFFICE

UNITED STATES DEPARTMENT OF COMMERCE
United States Patent and Trademark Office
Address: COMMISSIONER FOR PATENTS
P.O. Box 1450
Alexandria, Virginia 22313-1450
www.uspto.gov

WOLF GREENFIELD & SACKS, P.C.
600 ATLANTIC AVENUE
BOSTON, MA 02210-2206

Mail Date: 04/21/2010

Applicant	: Philippe Mejean	: DECISION ON REQUEST FOR
Patent Number	: 7594156	: RECALCULATION of PATENT
Issue Date	: 09/22/2009	: TERM ADJUSTMENT IN VIEW
Appliction No	: 10/324,247	: OF WYETH AND NOTICE OF INTENT TO
Filed	: 12/19/2002	: ISSUE CERTIFICATE OF CORRECTION
		:

The Request for Recalculation is **GRANTED** to the extent indicated.

The patent term adjustment has been determined to be **614** days. The USPTO will *sua sponte* issue a certificate of correction reflecting the amount of PTA days determined by the recalculation.

Prior to the issuance of the certificate of correction, the USPTO will afford patentee an opportunity to be heard and request reconsideration. Accordingly, patentee has **one month or thirty (30) days**, whichever is longer, to file a request for reconsideration of this patent term adjustment calculation. See 35 U.S.C. 154(b)(3)(B)(ii) and 37 CFR 1.322(a)(4). No extensions of time will be granted under 37 CFR 1.136.

Patentee should use document code PET.OP if electronically filing a request for reconsideration of this patent term adjustment calculation. The patentee must also include the information required by 37 CFR 1.705(b)(2) and the fee required by 37 CFR 1.18(e). If patentee does not file a timely request for reconsideration of this patent term adjustment calculation including the information required by 37 CFR 1.705(b)(2) and the fee required by 37 CFR 1.18(e), the USPTO will issue a certificate of correction reflecting the PTA determination noted above.

Patentee should be aware that in order to preserve the right to review in the United States District Court for the District of Columbia of the USPTO patent term adjustment determination, patentee must ensure that he or she also take the steps required under 35 U.S.C. 154(b)(4)(A) in a timely manner. Nothing in the request for recalculation should be construed as providing an alternative time frame for commencing a civil action under 35 U.S.C. 154(b)(4)(A).

Any questions concerning this decision should be directed to the Office of Patent Legal Administration at 571-272-7702.

UNITED STATES PATENT AND TRADEMARK OFFICE

Commissioner for Patents
United States Patent and Trademark Office
P.O. Box 1450
Alexandria, VA 22313-1450
www.uspto.gov

ALZA CORPORATION
P O BOX 7210
INTELLECTUAL PROPERTY DEPARTMENT
MOUNTAIN VIEW CA 94039-7210

COPY MAILED

JAN 10 2006

OFFICE OF PETITIONS

In re Application of :
Wendy A. YOUNG et al. :
Application No. 10/324,279 : DECISION ON PETITIONS
Filed: December 19, 2002 : UNDER 37 CFR 1.78(a)(6)
Attorney Docket No. ARC 2929 R1 :

This is a decision on the petition under 37 CFR § 1.78(a)(6), filed May 18, 2005, to accept an unintentionally delayed claim under 35 U.S.C. § 119(e) for the benefit of the prior-filed applications set forth in the concurrently filed amendment.

The petition was accompanied by an amendment to the first sentence of the specification following the title to include a reference to the prior-filed applications. While a reference to the prior-filed applications was not included in an ADS or in the first sentence of the specification following the title, a reference nevertheless was made in the declaration filed with the above-identified application.

The current procedure where a claim for priority under 37 CFR § 1.78(a)(6) is not included in the first sentence of the specification or in an ADS but does appear either in the oath or declaration or a transmittal letter filed with the application and the Office notes the claim for priority, no petition will be required to accept a late claim for priority. This is because the application would have been scheduled for publication on the basis of the information concerning the claim submitted elsewhere in the application within the time period set forth in 37 CFR § 1.78(a)(5)(ii). However, on the other hand, if the USPTO does not note the claim for priority to the prior-filed application(s) set forth in the oath or declaration or transmittal letter submitted with the application, a petition will be required to accept a late claim for priority under 37 CFR § 1.78(a)(6).[1] In the present case, the Office noted the claim for priority of the prior-filed applications in the declaration filed with the application, as shown by their inclusion on the filing receipt.

Therefore, the petition is unnecessary and is **DISMISSED AS INVOLVING A MOOT ISSUE**.

[1] *Note* MPEP 201.11 (III)(D) , pages 200-59 and 200-60 (Rev. 2. May 2004) and 66 Federal Register 67087 at 67089 (Dec. 28, 2001), effective December 28, 2001.

In view of the above, the $1370 petition fee submitted is unnecessary and will be refunded to petitioner's deposit account in due course.

Any questions concerning this decision on petition may be directed to David Bucci at (571) 272-7099. All other inquiries concerning either the examination procedures or status of the application should be directed to the Technology Center.

This application is being forwarded to the Examiner of Technology Center AU 3729 for appropriate action on the amendment filed **May 18, 2005**, including consideration by the examiner of the claim under 35 U.S.C. § 119(e) for benefit of the prior-filed application.

Brian Hearn
Petitions Examiner
Office of Petitions

UNITED STATES PATENT AND TRADEMARK OFFICE

Commissioner for Patents
United States Patent and Trademark Office
P.O. Box 1450
Alexandria, VA 22313-1450
www.uspto.gov
DIW May-05

LANIER FORD SHAVER & PAYNE
P O BOX 2087
HUNTSVILLE AL 35804

COPY MAILED

MAY 0 3 2005

OFFICE OF PETITIONS

In re Application of :
Chappell et al. :
Application No. 10/324,313 : DECISION ON PETITION
Filed: 18 December, 2002 :
Atty Docket No. 98-0592.03 :

This is a decision on the petition filed on 11 April, 2005, under 37 CFR 1.137(b)[1], to revive the above-identified application.

The petition is **GRANTED**.

The application became abandoned on 6 February, 2005, for failure to file a proper reply to the final Office action mailed on 5 October, 2004, which set a three (3) month shortened statutory period for reply. On 11 February, 2005 (certificate of mailing 7 February, 2005), petitioners filed a one (1) month extension of time and an amendment after final rejection. The amendment did not place the case in condition for allowance, however, and an Advisory Action was mailed on 25 February, 2005. The filing of

[1]Effective December 1, 1997, the provisions of 37 CFR 1.137(b) now provide that where the delay in reply was unintentional, a petition may be filed to revive an abandoned application or a lapsed patent pursuant to 37 CFR 1.137(b). A grantable petition filed under the provisions of 37 CFR 1.137(b) must be accompanied by:

(1) the required reply, unless previously filed. In a nonprovisional application abandoned for failure to prosecute, the required reply may be met by the filing of a continuing application. In an application or patent, abandoned or lapsed for failure to pay the issue fee or any portion thereof, the required reply must be the payment of the issue fee or any outstanding balance thereof.

(2) the petition fee as set forth in 37 CFR 1.17(m);

(3) a statement that the entire delay in filing the required reply from the due date for the reply until the filing of a grantable petition pursuant to 37 CFR 1.137(b) was unintentional. The Commissioner may required additional information where there is a question whether the delay was unintentional; and

(4) any terminal disclaimer (and fee as set forth in 37 CFR 1.20(d)) required pursuant to 37 CFR 1.137(c)).

the present petition precedes the mailing of Notice of Abandonment.

Petitioners have filed a Request for Continued Examination (RCE) and have indicated that the previously filed amendment (a copy has been provided with the petition) is the submission required under 37 CFR 1.114.

This application is being referred to Technology Center Art Unit 3723 for further processing.

Telephone inquiries concerning this matter may be directed to the undersigned at (571)272-3231.

D Wood

Douglas I. Wood
Senior Petitions Attorney
Office of Petitions

10/324,316

SPE RESPONSE FOR CERTIFICATE OF CORRECTION

8-22-05

DATE : 7-28-05

Paper No.: _____

TO SPE OF : ART UNIT 1638

10/324316

SUBJECT : Request for Certificate of Correction on Patent No.: 6855809

A response is requested with respect to the accompanying request for a certificate of correction.

Please complete this form and return with file, within 7 days to:
Certificates of Correction Branch - PK 3-915
Palm location **7580** - Tel. No. 305-8309

With respect to the change(s) requested, correcting Office and/or Applicant's errors, should the patent read as shown in the certificate of correction? No new matter should be introduced, nor should the scope or meaning of the claims be changed.

Thank You For Your Assistance

Certificates of Correction Branch

The request for issuing the above-identified correction(s) is hereby:
Note your decision on the appropriate box.

- ☐ **Approved** — All changes apply.
- ☒ **Approved in Part** — Specify below which changes do not apply.
- ☐ **Denied** — State the reasons for denial below.

Comments:

Inventor Carlson has already been deleted

W. Gary Jones
Supervisory Patent Examiner
Technology Center 1600

SPE

1638
Art Unit

Rev. 2/94

10/324316

PATENT

OIPE JC105 JUL 13 2005 PATENT & TRADEMARK OFFICE

IN THE UNITED STATES PATENT AND TRADEMARK OFFICE

10/324316

U.S. PATENT: 6855869 CASE NO.: BB1165USCNT

PATENTEE: REBECCA E. CAHOON, WILLIAM D. HITZ ART UNIT: 1638

ISSUED: FEBRUARY 15, 2005 EXAMINER: PHUONG T. BUI

ASSIGNED: E. I. DU PONT DE NEMOURS AND COMPANY

FOR: PHYTIC ACID BIOSYNTHETIC ENZYMES

Certificate JUL 18 2005 of Correction

REQUEST FOR CERTIFICATE OF CORRECTION

OK to enter PTB 8/22/05

Commissioner for Patents
P.O. Box 1450
Alexandria, VA 22313-1450

Sir:

The patentee through his attorney/agent hereby respectfully requests that a Certificate of Correction be issued in the above-referenced patent to correct printing errors in accordance with the attached Certificate of Correction Form PTO/SB/44 submitted in duplicate herewith.

On December 20, 2002, a Request for Transfer of Computer Readable Form was filed with the PTO stating the following:

> "The paper copy of the Sequence Listing in this application is identical to the computer readable copy of the Sequence Listing filed in Application No. 09/433,241, filed November 4, 1999. In accordance with 37 C.F.R. 1.821(e), please use the only filed computer readable form filed in that application as the computer readable form for the instant application. It is understood that the Patent and Trademark Office will make the necessary change in application number and filing date for the instant application. A paper copy of the Sequence Listing is included in the originally-filed specification of the instant application."

This request incorrectly stated the "identical" Application No. as 09/433,241, and filing date as November 4, 1999. The Application No. and filing date mentioned in this request is not associated with the current patent and, therefore, was a clerical error on the part of the patentee. The request should have read "The paper copy of the Sequence Listing in this application is identical to the computer readable copy of the

07/14/2005 HRLANCO 00000002 041928 6855869
01 FC:1811 100.00 DA

Rev.3/94

GP 1638 IFW

PATENT

IN THE UNITED STATES PATENT AND TRADEMARK OFFICE

JAN 10 2005 JC131 PATENT & TRADEMARK OFFICE

In the Application of:
REBECCA E. CAHOON ET AL.

CASE NO.: BB1165 APPLICATION NO.: 10/324,316

CONFIRMATION NO.: 1771 GROUP ART UNIT: 1638

EXAMINER: PHUONG T. BUI FILED: DECEMBER 20, 2002

FOR: PHYTIC ACID BIOSYNTHETIC ENZYMES

OK to enter PTB 8/22/05

PETITION
TO CORRECT INVENTORSHIP UNDER 37 C.F.R. 1.48(b)

Commissioner for Patents
P.O. Box 1450
Alexandria, VA 22313-1450

Sir:

The prosecution of this application has resulted in the cancellation of claims so that less than all the originally named inventors are the actual inventors of the invention being claimed.

Please amend this application to delete Thomas J. Carlson and Richard W. Pearlstein as co-inventor(s). Thomas J. Carlson and Richard W. Pearlstein are being deleted as co-inventors for this application because their invention is no longer being claimed in the application.

Please charge the required fee under 37 CFR 1.17(i) of $130.00 to Deposit Account 04-1928 (E. I. du Pont de Nemours and Company). If this fee is insufficient or incorrect, please charge or credit the balance to the above-identified account.

01/12/2005 LWONDIM1 00000077 041928 10324316
01 FC:1464 130.00 DA

Respectfully submitted,

J. KENNETH JOUNG
ATTORNEY FOR APPLICANTS
REGISTRATION NO. 41,881
TELEPHONE: 302-992-4929
FACSIMILE: 302-892-1026

DATED: 6 January 2005

PTO/SB/44 (04-04)
Approved for use through 04/30/2007. OMB 0651-0033
U.S. Patent and Trademark Office; U.S. DEPARTMENT OF COMMERCE
Under the Paperwork Reduction Act of 1995, no persons are required to respond to a collection of information unless it displays a valid OMB control number.
(Also Form PTO-1050)

UNITED STATES PATENT AND TRADEMARK OFFICE
CERTIFICATE OF CORRECTION

PATENT NO. : 6855869 B2

DATED : February 15, 2005

INVENTOR(S) : CAHOON REBECCA E., HITZ WILLIAM D.

It is certified that error appears in the above-identified patent and that said Letters Patent is hereby corrected as shown below:

Please delete the Sequence Listing that begins at the bottom of columns 23 and 24 and ends at the bottom of columns 47 and 48 of the instant patent and replace with pages 1-23 of the "as-filed" Sequence Listing in the original case filing dated December 20, 2002.

First page of patent, (75) Inventors section, please delete "~~R~~ichard W. Pearlstein, Newark, DE (US); ~~Thomas J. Carlson, Ann Arbor, MI (US)~~".

ok to enter PTB 8/22/05

MAILING ADDRESS OF SENDER:

DAWN S. CLARK
E. I. du Pont de Nemours and Company
4417 Lancaster Pike
Wilmington, Delaware 19805

PATENT NO. 6855869

No. of additional copies ⇨ 1

This collection of information is required by 37 CFR 1.322, 1.323, and 1.324. The information is required to obtain or retain a benefit by the public which is to file (and by the USPTO to process) an application. Confidentiality is governed by 35 U.S.C. 122 and 37 CFR 1.14. This collection is estimated to take 1.0 hour to complete, including gathering, preparing, and submitting the completed application form to the USPTO. Time will vary depending upon the individual case. Any comments on the amount of time you require to complete this form and/or suggestions for reducing this burden, should be sent to the Chief Information Officer, U.S. Patent and Trademark Office, U.S. Department of Commerce, P.O. Box 1450, Alexandria, VA 22313-1450. DO NOT SEND FEES OR COMPLETED FORMS TO THIS ADDRESS. SEND TO: **Attention Certificate of Corrections Branch, Commissioner for Patents, P.O. Box 1450, Alexandria, VA 22313-1450.**

UNITED STATES PATENT AND TRADEMARK OFFICE

Commissioner for Patents
United States Patent and Trademark Office
P.O. Box 1450
Alexandria, VA 22313-1450
www.uspto.gov

E I DU PONT DE NEMOURS AND COMPANY
LEGAL PATENT RECORDS CENTER
BARLEY MILL PLAZA 25/1128
4417 LANCASTER PIKE
WILMINGTON DE 19805

COPY MAILED

APR 0 7 2005

OFFICE OF PETITIONS

In re Application of :
Ian D. Parker et al. :
Application No. 10/324,317 : ON PETITION
Filed: December 20, 2002 :
Attorney Docket No.: UA0030USCNT :

This is a decision on the petition under 37 CFR 1.137(b), filed February 22, 2005, to revive the above-identified application.

The petition is **GRANTED**.

This application became abandoned on December 14, 2004 for failure to timely file a reply to the final Office action mailed July 13, 2004, which set a three (3) month shortened statutory period for reply. A two month extension of time under 37 CFR 1.136(a) was obtained, however, the response filed December 13, 2004 (certificate of mail/transmission date) did not place the application in condition for allowance. An advisory action was mailed January 19, 2005. Accordingly, this application is abandoned. The instant petition and this decision precede the mailing of the Notice of Abandonment.

The Notice of Appeal filed February 22, 2005 has been entered and made of record. Accordingly, the two (2)-month period for filing the Appeal Brief, in triplicate, accompanied by the fee required by law, runs from the date of this decision.

The application is being forwarded to Technology Center 2826 for processing of the Notice of Appeal.

Telephone inquiries concerning this matter should be directed to the undersigned Petitions Attorney at (571) 272-3212.

Patricia Faison-Ball
Senior Petitions Attorney
Office of Petitions

SPE RESPONSE FOR CERTIFICATE OF CORRECTION

Paper No.:20071202

DATE : December 2, 2007

TO SPE OF : ART UNIT 2614

SUBJECT : Request for Certificate of Correction on Patent No.: 6,999,748

A response is requested with respect to the accompanying request for a certificate of correction.

Please complete this form and return with file, within **7** days to:
Certificates of Correction Branch - PK 3-910
Palm location **7590** - Tel. No. 305-8201

With respect to the change(s) requested, correcting Office and/or Applicant's errors, should the patent read as shown in the certificate of correction? No new matter should be introduced, nor should the scope or meaning of the claims be changed.

Thank You For Your Assistance **Certificates of Correction Branch**

The request for issuing the above-identified correction(s) is hereby:
Note your decision on the appropriate box.

☐ **Approved** **All** changes apply.

☒ **Approved in Part** Specify below which changes **do not** apply.

☐ **Denied** State the reasons for denial below.

Comments:

Per insertion on col.1, line 50, there is no the such terms "and wherein" so that the insertion can be made.

Per insertion on col.7, line 29, the insertion will constitute a new matter.

Per insertion on col.8, line 43, the insertion may change scope of the claim.

SPE RESPONSE FOR CERTIFICATE OF CORRECTION

Paper No.: _____

DATE : 04/10/06

TO SPE OF : ART UNIT 2614

SUBJECT : Request for Certificate of Correction for Appl. No.: 10/324354 Patent No.: 6999748

Please respond to this request for a certificate of correction within 7 days.

Please review the requested changes/corrections as shown in the **COCIN** document(s) in the IFW application image. No new matter should be introduced, nor should the scope or meaning of the claims be changed.

Please complete the response (see below) and forward the completed response to scanning using document code **COCX**.

Certificates of Correction Branch

703-308-9390 ext. 123

Thank You For Your Assistance

The request for issuing the above-identified correction(s) is hereby:

Note your decision on the appropriate box.

- ☐ **Approved** — **All** changes apply.
- ☐ **Approved in Part** — Specify below which changes **do not** apply.
- ☒ **Denied** — State the reasons for denial below.

Comments: The proposed changes to Column 1, Line 50 and Column 7, Line 29 raise issues of new matter

Curtis Kuntz

SPE

2643

Art Unit

10/324,354

Cofc

Attorney Docket No.: 364388087US

I hereby certify that this correspondence is being deposited with the U.S. Postal Service with sufficient postage as First Class Mail in an envelope addressed to: Commissioner for Patents, P.O. Box 1450, Alexandria, VA 22313-1450, on:

Date: 3/27/06 By: Chrissy Hurdle

OIPE IAP25 MAR 29 2006 PATENT & TRADEMARK OFFICE

PATENT

IN THE UNITED STATES PATENT AND TRADEMARK OFFICE

IN RE APPLICATION OF:	CHRISTOPHER WHITE	EXAMINER:	BINH K. TIEU
PATENT NO.:	6,999,748 B2	ART UNIT:	2643
ISSUED:	FEBRUARY 14, 2006	CONF. NO.:	3756

FOR: **AUTOMATED DEVICE BEHAVIOR MANAGEMENT BASED ON NETWORK CHARGING AND RATING CONDITIONS**

Certificate MAR 31 2006 of Correction

Request for Certificate of Correction under 37 C.F.R. §1.322 or §1.323

Commissioner for Patents
P.O. Box 1450
Alexandria, VA 22313-1450

Sir:

1. The applicant(s) requests a Certificate of Correction to correct errors in the above-identified patent, which are listed on the enclosed Form PTO/SB/44.

2. Any errors on the part of the applicant are of a clerical or typographical nature or are otherwise minor in character. None of the requested corrections would constitute new matter or require reexamination of the patent.

3. Source of Error(s) and Payment of Fee:

   ☒ All of the errors listed on Form PTO/SB/44 are believed to be due to mistake on the part of the USPTO (37 C.F.R. §1.322). Accordingly, no fees are believed to be due.

   ☐ At least one of the errors occurred due to applicant's mistake made in good faith (37 C.F.R. §1.323).

   ☐ A check covering the fee under 37 C.F.R. §1.20(a) ($100.00) is enclosed herewith.

   ☐ Please charge the fee under 37 C.F.R. §1.20(a) to Deposit Account No. 50-0665. This paper is provided in triplicate.

APR 03 2006

10/324,354

Cofc

Attorney Docket No.: 364388087US

I hereby certify that this correspondence is being deposited with the U.S. Postal Service with sufficient postage as First Class Mail in an envelope addressed to: Commissioner for Patents, P.O. Box 1450, Alexandria, VA 22313-1450, on:

Date: 3/27/06 By: Chrissy Hurdle

OIPE IAP35 MAR 29 2006 PATENT & TRADEMARK OFFICE

PATENT

IN THE UNITED STATES PATENT AND TRADEMARK OFFICE

IN RE APPLICATION OF:	CHRISTOPHER WHITE	EXAMINER:	BINH K. TIEU
PATENT NO.:	6,999,748 B2	ART UNIT:	2643
ISSUED:	FEBRUARY 14, 2006	CONF. NO.:	3756

FOR: **AUTOMATED DEVICE BEHAVIOR MANAGEMENT BASED ON NETWORK CHARGING AND RATING CONDITIONS**

Certificate MAR 31 2006 of Correction

Request for Certificate of Correction under 37 C.F.R. §1.322 or §1.323

Commissioner for Patents
P.O. Box 1450
Alexandria, VA 22313-1450

Sir:

1. The applicant(s) requests a Certificate of Correction to correct errors in the above-identified patent, which are listed on the enclosed Form PTO/SB/44.

2. Any errors on the part of the applicant are of a clerical or typographical nature or are otherwise minor in character. None of the requested corrections would constitute new matter or require reexamination of the patent.

3. Source of Error(s) and Payment of Fee:

   ☒ All of the errors listed on Form PTO/SB/44 are believed to be due to mistake on the part of the USPTO (37 C.F.R. §1.322). Accordingly, no fees are believed to be due.

   ☐ At least one of the errors occurred due to applicant's mistake made in good faith (37 C.F.R. §1.323).

   ☐ A check covering the fee under 37 C.F.R. §1.20(a) ($100.00) is enclosed herewith.

   ☐ Please charge the fee under 37 C.F.R. §1.20(a) to Deposit Account No. 50-0665. This paper is provided in triplicate.

APR 03 2006

☒ Please charge any underpayment necessary for consideration of this paper to Deposit Account No. 50-0665.

4. Please send the Certificate of Correction to the undersigned at the address shown below.

Respectfully submitted,
Perkins Coie LLP

Date: 3/23/06

M. Macartney
Michelle C. Macartney
Registration No. 55,828

Correspondence Address:
Customer No. 25096
Perkins Coie LLP
P.O. Box 1247
Seattle, Washington 98111-1247
(206) 359-8000

APR 03 2006

NOTE: USE TAB KEY TO MOVE FROM FIELD TO FIELD

PTO/SB/ 44 (02-01)
Approved for use through 01/31/2004. OMB 0651-0033
U.S. Patent and Trademark Office; U.S. DEPARTMENT OF COMMERCE

Under the Paperwork Reduction Act of 1995, no persons are required to respond to a collection of information unless it displays a valid OMB control number.
(Also Form PTO-1050)

UNITED STATES PATENT AND TRADEMARK OFFICE

CERTIFICATE OF CORRECTION

PATENT NO : 6,999,748 B2

DATED : February 14, 2006

INVENTOR(S) : Christopher White

It is certified that error appears in the above-identified patent and that said Letters Patent is hereby corrected as shown below:

Column 1
Line 50, insert --wherein the current provider-imposed cost is not associated with load condition of a network of the network provider, -- between "device," and "and wherein";

Column 7
Line 29, insert --and wherein the financial condition is not associated with a load condition on the provider network; -- after "communicate via a provider network;";

Column 8
Line 38, insert --and-- after "wireless device;";
Line 43, "...one or more actions using one or more software applications..." should be --one or more actions using at least one or more of the downloaded software applications--;

Column 9
Line 23, insert --and-- after "wireless network;";

Column 10
Line 25, insert --but not to load conditions on the network-- between "work;" and "and";

Column 11
Line 17, "relates a conditions" should be --relates conditions--;
Line 19, "a condition catalog and the a condition registry" should be --condition catalog and the condition registry--;
Line 27, delete "a";

MAILING ADDRESS OF SENDER: Perkins Coie LLP
PATENT-SEA
PO Box 1247
Seattle, WA 98111-1247

PATENT NO. 6,999,748

No. of additional copies
⇨ 1

Burden Hour Statement: This form is estimated to take 1.0 hour to complete. Time will vary depending upon the needs of the individual case. Any comments on the amount of time you are required to complete this form should be sent to the Chief Information Officer, U.S. Patent and Trademark Office, Washington, DC 20231. DO NOT SEND FEES OR COMPLETED FORMS TO THIS ADDRESS. SEND TO: Commissioner for Patents, Washington, DC 20231.

[illegible] 2006

UNITED STATES PATENT AND TRADEMARK OFFICE

Commissioner for Patents
United States Patent and Trademark Office
P.O. Box 1450
Alexandria, VA 22313-1450
www.uspto.gov

IBM CORP (YA)
C/O YEE & ASSOCIATES PC
P.O. BOX 802333
DALLAS TX 75380

COPY MAILED

AUG 0 9 2007

OFFICE OF PETITIONS

In re Application of :
James Russell Boykin et al :
Application No. 10/324,360 : DECISION ON PETITION
Filed: December 18, 2002 :
Attorney Docket No. :
AUS920020626US1

This is a decision on the petition under 37 CFR 1.137(b), filed December 1, 2006, to revive the above-identified application.

The petition is **GRANTED.**

The application became abandoned for failure to reply in a timely manner to the non-final Office action mailed, December 19, 2005, which set a shortened statutory period for reply of three (3) months. No extensions of time were obtained under the provisions of 37 CFR 1.136(a). Accordingly, the application became abandoned on March 21, 2006 (March 19, 2006, the due date, is a Sunday). A Notice of Abandonment was mailed on July 27, 2006.

The petition satisfies the requirements of 37 CFR 1.137(b) in that petitioner has supplied (1) a reply, (2) the petition fee of $1,500, and (3) a proper statement of unintentional delay. Accordingly, the failure to timely reply to the non-final Office action of December 19, 2005 is accepted as being unintentionally delayed.

It is not apparent whether the person signing the statement of unintentional delay was in a position to have firsthand or direct knowledge of the facts and circumstances of the delay at issue. Nevertheless, such statement is being treated as having been made as the result of a reasonable inquiry into the facts and circumstances of such delay. See 37 CFR 10.18(b) and Changes to Patent Practice and Procedure; Final Rule Notice, 62 Fed. Reg. 53131, 53178 (October 10, 1997), 1203 Off. Gaz. Pat. Office 63, 103 (October 21, 1997). In the event that such an inquiry has not been made, petitioner must make such an inquiry. If such inquiry results in the discovery that it is not correct that the

entire delay in filing the required reply from the due date for the reply until the filing of a grantable petition pursuant to 37 CFR 1.137(b) was unintentional, petitioner must notify the Office.

This application is being referred to Technology Center AU 2192 for appropriate action in the normal course of business on the reply received December 1, 2006.

Telephone inquiries concerning this decision should be directed to the undersigned at (571) 272-3218.

Frances Hicks
Petitions Examiner
Office of Petitions

UNITED STATES PATENT AND TRADEMARK OFFICE

Commissioner for Patents
United States Patent and Trademark Office
P.O. Box 1450
Alexandria, VA 22313-1450
www.uspto.gov

HOFFMANN & BARON, LLP
6900 JERICHO TURNPIKE
SYOSSET NY 11791

COPY MAILED

APR 2 8 2009

OFFICE OF PETITIONS

In re Application of	:	
Christopher Brian Brodeur	:	DECISION ON PETITION
Application No. 10/324,367	:	TO WITHDRAW
Filed: December 20, 2002	:	FROM RECORD
Attorney Docket No. 760-56 RCE	:	

This is a decision on the Request to Withdraw as attorney or agent of record under 37 C.F.R. § 1.36(b), filed March 17, 2009.

The request is **APPROVED**.

A grantable request to withdraw as attorney/agent of record must be signed by every attorney/agent seeking to withdraw or contain a clear indication that one attorney is signing on behalf of another/others.

The request was signed by Anna-Lisa Gallo on behalf of all attorneys of record who are associated with customer No. 23869.

All attorneys/agents associated with the Customer Number 23869 have been withdrawn. Applicant is reminded that there is no attorney of record at this time.

The correspondence address of record remains unchanged.

There is an outstanding Office action mailed March 5, 2009 that requires a reply.

Telephone inquires concerning this decision should be directed to Petitions Examiner Joan Olszewski at (571) 272-7751. All other inquires concerning either the examination or status of the application should be directed to the Technology Center.

/Liana Walsh/
Liana Walsh
Petitions Examiner
Office of Petitions

UNITED STATES PATENT AND TRADEMARK OFFICE

Commissioner for Patents
United States Patent and Trademark Office
P.O. Box 1450
Alexandria, VA 22313-1450
www.uspto.gov

MAILED

NOV 18 2004

DIRECTOR'S OFFICE
TECHNOLOGY CENTER 3600

Justin B. Rand
Brinks, Hofer, Gilson & Lione
NBC Tower, Suite 3600
P.O. Box 10395
Chicago, IL 60610

In re application of : **DECISION ON PETITION**
Gregg Panek : **TO MAKE SPECIAL**
Application No. 10/324,370 : **(ACCELERATED**
Filed: December 20, 2002 : **EXAMINATION)**
For: SYSTEM FOR SEPARATE SHIPPING OF PASSENGER BAGGAGE

This is in response to the petition filed on March 31, 2003 to make the above-identified application special on the basis of special examining procedure for certain new applications - accelerated examination as set forth in MPEP § 708.02 VIII.

The requirements for granting special status under this section are: (A) a petition to make special accompanied by the fee set forth in 37 CFR 1.17(i); (B) all claims being directed to a single invention, or an election without traverse if the Office determines that all the claims are not directed to a single invention; (C) a statement that a pre-examination search was made listing the field of search; (D) one copy of each of the references deemed most closely related to the subject matter encompassed by the claims if said references are not already of record; and (E) a detailed discussion of how the claimed subject matter is patentable over the references in accordance with 37 CFR 1.111 (b) and (c).

Since all of the requirements for special status under MPEP § 708.02 VIII have been met, the petition is **GRANTED**.

The examiner is directed (1) to make an interference search for possible interfering applications, (2) to promptly examine this application out of turn, and (3) if any interfering application is

discovered, to examine such application simultaneously and state in the first official letter of such application that it is being taken out of turn because of a possible interference.

Petitioner is advised that this application will continue to be special, throughout its entire prosecution and pendency, including interference or appeal, if any, only if petitioner makes a prompt ***bona fide*** effort, in response to each Office action, to place the application in condition for allowance, even if it is necessary to conduct an interview with the examiner to accomplish this purpose.

SUMMARY: Petition to Make Special **GRANTED.**

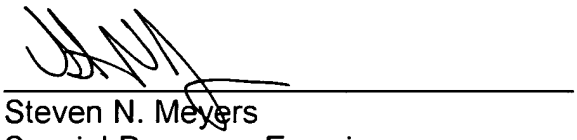

Steven N. Meyers
Special Programs Examiner
Technology Center 3600
(703) 308-3868

SNM/snm: 11/16/04

UNITED STATES PATENT AND TRADEMARK OFFICE

Commissioner for Patents
United States Patent and Trademark Office
P.O. Box 1450
Alexandria, VA 22313-1450
www.uspto.gov

AGILENT TECHNOLOGIES, INC.
Legal Department, DL429
Intellectual Property Administration
P.O. Box 7599
Loveland CO 80537-0599

COPY MAILED

FEB 19 2008

OFFICE OF PETITIONS

In re Application of

Sampson, et al. :

Application No. 10/324,409 : DECISION ON PETITION

Filed: December 18, 2002 :

Attorney Docket No. 2003309-0028

This is a decision on the petition under 37 CFR 1.137(b), filed, February 1, 2008, to revive the above-identified application.

The petition is **GRANTED**.

The above-cited application became abandoned for failure to file a proper reply in a timely manner to the Decision on Appeal mailed October 31, 2007, which set a non-extendable period for reply of two months from its mailing. The application became abandoned on January 1, 2008. A Notice of Abandonment was mailed on January 9, 2008.

The amendment filed February 1, 2008 is noted.

The application is being forwarded to Technology Center 1600, GAU 1635 for further processing.

Telephone inquiries concerning this decision should be directed to the undersigned at (571) 272-3222.

Kenya A. McLaughlin
Petitions Attorney
Office of Petitions

UNITED STATES PATENT AND TRADEMARK OFFICE

COMMISSIONER FOR PATENTS
UNITED STATES PATENT AND TRADEMARK OFFICE
P.O. BOX 1450
ALEXANDRIA, VA 22313-1450
www.uspto.gov

CANTOR COLBURN, LLP
55 GRIFFIN ROAD SOUTH
BLOOMFIELD, CT 06002

COPY MAILED

MAR 16 2005

OFFICE OF PETITIONS

In re Application of :
Gregg E. Favalora, et al. :
Application No. 10/321,410 : ON PETITION
Filed: December 19, 2002 :
Attorney Docket No. ASC-0001 :

This is a decision on the petition, filed March 15, 2005, under 37 CFR 1.313(c)(2) to withdraw the above-identified application from issue after payment of the issue fee.

The petition is **GRANTED**.

The above-identified application is withdrawn from issue for consideration of a submission under 37 CFR 1.114 (request for continued examination). See 37 CFR 1.313(c)(2).

Petitioner is advised that the issue fee paid on January 13, 2005, in the above-identified application cannot be refunded. If, however, the above-identified application is again allowed, petitioner may request that it be applied towards the issue fee required by the new Notice of Allowance. [1]

Telephone inquiries relating to this decision should be directed to the undersigned at (571) 272-3204.

The application is being referred to Technology Center AU 2873 for further processing of the request for continued examination under 37 CFR 1.114.

Sherry D. Brinkley
Petitions Examiner
Office of Petitions
Office of the Deputy Commissioner
for Patent Examination Policy

[1]The request to apply the issue fee to the new Notice may be satisfied by completing and returning the new Issue Fee Transmittal Form PTOL-85(b), which includes the following language thereon: "Commissioner for Patents is requested to apply the Issue Fee and Publication Fee (if any) or re-apply any previously paid issue fee to the application identified above." Petitioner is advised that, whether a fee is indicated as being due or not, the Issue Fee Transmittal Form **must** be completed and timely submitted to avoid abandonment. Note the language in bold text on the first page of the Notice of Allowance and Fee(s) Due (PTOL-85).

UNITED STATES PATENT AND TRADEMARK OFFICE

UNITED STATES DEPARTMENT OF COMMERCE
United States Patent and Trademark Office
Address: COMMISSIONER FOR PATENTS
P.O. Box 1450
Alexandria, Virginia 22313-1450
www.uspto.gov

APPLICATION NO.	FILING DATE	FIRST NAMED INVENTOR	ATTORNEY DOCKET NO.	CONFIRMATION NO.
10/324,416	12/19/2002	Georg Schmitz	PHDE 010352 US	9356

38107 7590 06/24/2009

PHILIPS INTELLECTUAL PROPERTY & STANDARDS
P. O. Box 3001
BRIARCLIFF MANOR, NY 10510

EXAMINER	
ROY, BAISAKHI	
ART UNIT	PAPER NUMBER
3737	

MAIL DATE	DELIVERY MODE
06/24/2009	PAPER

Please find below and/or attached an Office communication concerning this application or proceeding.

The time period for reply, if any, is set in the attached communication.

UNITED STATES PATENT AND TRADEMARK OFFICE

Commissioner for Patents
United States Patent and Trademark Office
P.O. Box 1450
Alexandria, VA 22313-1450
www.uspto.gov

PHILIPS INTELLECTUAL PROPERTY & STANDARDS
P. O. Box 3001
BRIARCLIFF MANOR NY 10510

In re Application of:	:	
SCHMITZ, GEORG et al	:	
Serial No. 10/324,416	:	
Filed: Dec. 19, 2002	:	
Docket: PHDE 010352 US	:	DECISION ON PETITION
Title: SYSTEM AND METHOD WITH AUTOMATICALLY OPTIMIZED IMAGING	:	UNDER 37 CFR § 1.181

This is a decision on the petition filed June 16, 2009 under 37 CFR 1.181 requesting withdrawal of the finality of the last Office action mailed on April 16, 2009.

The petition is granted.

It is noted that the record does show that in the amendment filed on January 22, 2009, the applicant did not amend the independent claim 9. Therefore, the rejection of claim 9 under the second Paragraph of 35 U.S.C. § 103 was not necessitated by the amendment of January 22, 2009. Since no amendment was made in claim 9 in the January 22, 2009 amendment, thus, the rejection of claim 9 under 35 U.S.C. § 103 was not necessitated by the amendment.

As such, the finality of the Office actions issued on April 16, 2009 is premature and the finality of the Office action is hereby withdrawn. The Office action mailed on April 16, 2009 will be designated as non-final Office action. Since the finality is being withdrawn, the amendment filed on June 16, 2009 in response to the Office action of April 16, 2009 has been treated as a 37 CFR § 1.111 amendment. The amendment of June 16, 2009 now has been entered for consideration. The examiner has been requested to issue a new Office action.

The application is being forwarded to the examiner via the Supervisory Patent Examiner of the Art Unit 3737 for consideration of the amendment filed on June 16, 2009. Any inquiry regarding this decision should be directed to Henry C. Yuen, Special Programs Examiner, at (571) 272-4856.

PETITION GRANTED.

Robert Olszewski, Director
Technology Center 3700

UNITED STATES PATENT AND TRADEMARK OFFICE

COMMISSIONER FOR PATENTS
UNITED STATES PATENT AND TRADEMARK OFFICE
P.O. BOX 1450
ALEXANDRIA, VA 22313-1450
www.uspto.gov

COPY MAILED

JUN 22 2007

OFFICE OF PETITIONS

MOORE & VAN ALLEN PLLC
P.O. BOX 13706
Research Triangle Park NC 27709

In re Patent No. 6,979,689 :
Issue Date: December 27, 2005 :
Application No. 10/324,425 : NOTICE
Filed: December 20, 2002 :
Attorney Docket No. PEDI-08 :

This is a notice regarding your request for acceptance of a fee deficiency submission under 37 CFR 1.28. On September 1, 1998, the Court of Appeals for the Federal Circuit held that 37 CFR 1.28(c) is the sole provision governing the time for correction of the erroneous payment of the issue fee as a small entity. **See DH Technology v. Synergystex International, Inc. 154 F.3d 1333, 47 USPQ2d 1865 (Fed. Cir. Sept. 1, 1998).**

The Office no longer investigates or rejects original or reissue applications under 37 CFR 1.56. **1098 Off. Gaz. Pat. Office 502 (January 3, 1989)**. Therefore, nothing in this Notice is intended to imply that an investigation was done.

Your fee deficiency submission under 37 CFR 1.28 is hereby **ACCEPTED**.

This application is no longer entitled to small entity status. Accordingly, all future fees paid in this application must be paid at the large entity rate.

No fee is due in connection with this request. A refund of the $400.00 petition fee has been requested from the Finance Office, Refund Section.

Inquiries related to this communication should be directed to the undersigned at (571) 272-3205.

Alesia M. Brown
Petitions Attorney
Office of Petitions

UNITED STATES PATENT AND TRADEMARK OFFICE

UNITED STATES DEPARTMENT OF COMMERCE
United States Patent and Trademark Office
Address: COMMISSIONER FOR PATENTS
P.O. Box 1450
Alexandria, Virginia 22313-1450
www.uspto.gov

APPLICATION NUMBER	FILING OR 371 (c) DATE	FIRST NAMED APPLICANT	ATTY. DOCKET NO./TITLE
10/324,425	12/20/2002	Gilbert R. Gonzales	PEDI-08

CONFIRMATION NO. 9357

OC000000024493521

26875
WOOD, HERRON & EVANS, LLP
2700 CAREW TOWER
441 VINE STREET
CINCINNATI, OH 45202

Date Mailed: 06/22/2007

NOTICE REGARDING CHANGE OF POWER OF ATTORNEY

This is in response to the Power of Attorney filed 02/19/2007.

- The Power of Attorney to you in this application has been revoked by the assignee who has intervened as provided by 37 CFR 3.71. Future correspondence will be mailed to the new address of record(37 CFR 1.33).

Office of Initial Patent Examination (571) 272-4000, or 1-800-PTO-9199
FORMER ATTORNEY/AGENT COPY

UNITED STATES PATENT AND TRADEMARK OFFICE

UNITED STATES DEPARTMENT OF COMMERCE
United States Patent and Trademark Office
Address: COMMISSIONER FOR PATENTS
P.O. Box 1450
Alexandria, Virginia 22313-1450
www.uspto.gov

APPLICATION NUMBER	FILING OR 371 (c) DATE	FIRST NAMED APPLICANT	ATTY. DOCKET NO./TITLE
10/324,425	12/20/2002	Gilbert R. Gonzales	PEDI-08

CONFIRMATION NO. 9357

OC000000024493521

26875
WOOD, HERRON & EVANS, LLP
2700 CAREW TOWER
441 VINE STREET
CINCINNATI, OH 45202

Date Mailed: 06/22/2007

NOTICE REGARDING CHANGE OF POWER OF ATTORNEY

This is in response to the Power of Attorney filed 02/19/2007.

- The Power of Attorney to you in this application has been revoked by the assignee who has intervened as provided by 37 CFR 3.71. Future correspondence will be mailed to the new address of record(37 CFR 1.33).

Office of Initial Patent Examination (571) 272-4000, or 1-800-PTO-9199
NEW ATTORNEY/AGENT COPY

UNITED STATES PATENT AND TRADEMARK OFFICE

UNITED STATES DEPARTMENT OF COMMERCE
United States Patent and Trademark Office
Address: COMMISSIONER FOR PATENTS
P.O. Box 1450
Alexandria, Virginia 22313-1450
www.uspto.gov

APPLICATION NUMBER	FILING OR 371 (c) DATE	FIRST NAMED APPLICANT	ATTY. DOCKET NO./TITLE
10/324,425	12/20/2002	Gilbert R. Gonzales	PEDI-08

CONFIRMATION NO. 9357

24239
MOORE & VAN ALLEN PLLC
P.O. BOX 13706
Research Triangle Park, NC 27709

OC000000024493528

Date Mailed: 06/22/2007

NOTICE OF ACCEPTANCE OF POWER OF ATTORNEY

This is in response to the Power of Attorney filed 02/19/2007.

The Power of Attorney in this application is accepted. Correspondence in this application will be mailed to the above address as provided by 37 CFR 1.33.

UNITED STATES PATENT AND TRADEMARK OFFICE

MAILED

MAR 17 2003

Technology Center 2100

COMMISSIONER FOR PATENTS
UNITED STATES PATENT AND TRADEMARK OFFICE
WASHINGTON, D.C. 20231
www.uspto.gov

Paper No. 3

Ruben Alcoba
Alcoba Edson, P.A.
2430 Sheridan Street
Hollywood, Florida 33020

In re Application of: Desjardins et al.	)	
Application No. 10/324,442	)	**DECISION DISMISSING PETITION**
Attorney Docket No. 10001.00	)	**TO MAKE SPECIAL UNDER 37**
Filed: December 16, 2002	)	**C.F.R. §1.102(c) and M.P.E.P.**
For: A WIRELESS PROBABILITY	)	**§708.02(V)**
TICKET METHOD AND APPARATUS	)	

This is a decision on the petition, filed on December 19, 2002 under 37 CFR §1.102(c) and M.P.E.P. §708.02(V), requesting to make special of the above-identified application because of environmental quality.

The petition is **DISMISSED**.

M.P.E.P. §708.02, Section V which sets out the prerequisites for a grantable petition for Accelerated Examination under 37 C.F.R. §1.102(c), states in relevant part:

A new application (one which has not received any examination by the examiner) may be granted special status provided that applicant (and this term includes applicant's attorney or agent) complies with each of the following items:

> The U.S. Patent and Trademark Office will accord "special" status to all patent applications for inventions which materially enhance the quality of the environment of mankind by contributing to the restoration or maintenance of the basic life-sustaining natural elements, i.e., air, water, and soil.
> All applicants desiring to participate in this program should petition that their applications be accorded "special" status. Such petitions should be accompanied by statements under 37 CFR 1.102 by the applicant, assignee, or an attorney/agent registered to practice before the Office explaining how the inventions contribute to the restoration or maintenance of one of these life-sustaining elements. No fee is required for such a petition. See 37 CFR 1.102(c).

In support for the petition, Petitioners provide with a declaration of Mr. Richard W. Desjardins, one of the inventors, and that has identified and relied on four patents to support for the fact that some of the chemicals used to create the scratch-off instant ticket type of game cards have been found to kill fish. However, such support evidences are found to be not very realistic, indeed as noted below with relevant portions could have found from the cited patents, and note that, Petitioners merely just cited the patents:

Patent No.	Title & Relevant evident
6,160,046	Abrasion-Removable Coating and Method of Application In which "*useful to manufacture abrasion removable coatings and still more particularly to scratch-off lottery tickets*" (*See* col. 1:5-7). In that the patent provides some advantage over compositions of the prior art, which is that they are more environmentally friendly, and wherein only some toxicity facts to aquatic organisms that would kill experimental fishes with certain concentration for particular type of solvents, i.e., hydrocarbon & oxygenated solvents, based on G. Rippen (one author) is cited (*See* col. 3:42-65). In other words, not all known abrasion-removable coating of prior art used in scratch-off type of game cards is environmentally unfriendly per se, as once alleged.
5,925,440	Removable Scratch-Off Coating In which it provides a simplified means for producing removable scratch-off coatings so that it releases from the areas where the release coat is applied and remains adhered to the substrate in the form of symbols where the release coat is not applied. Thus, it is not necessary to disguise the ink or physically to protect the ink from tampering processes (*See* col. 2:18-39). Note that, there is not thing about the environmental quality aspect of the invention that the Petitioners have been relied upon to make his case. Rather, the Petitioners merely just cited the patent.
5,401,795	Water-Based Physically Drying Coating Agents, Manufacture and Use Thereof In which "*The coating agent is particularly suitable for manufacturing lacquers for repairs in the motor vehicle sector*"!!! (*See* Abstract) – Irrelevant.
4,822,421	Thixotropic Cement Compositions!!! (*See* Abstract) – Irrelevant.

Petitioners' submission fail to meet the criteria set out with respect to environment quality in M.P.E.P. §708.02(V). The claimed invention is generally directed to a method and apparatus for gaming with a wireless probability ticket that holds a two-layered transaction/message, wherein means is provided to protect and/or decrypt a predetermined second layer.

Although it can be said that the claimed invention implementing with a online wireless gaming method would limit the amount of instant ticket type of game cards, the method disclosed, however, does not teach directly in contributing to the restoration or maintenance of the basic life-sustaining natural elements, i.e., air, water, and soil, as the Petitioners' declaration alleged that "*this invention will help*

improve the air we breathe and the water we drink by minimizing the quantity of chemicals released into our environment." The disclosed invention mainly concerned with how to overcome shortfalls in the art of a probability game card type, e.g., the paper format tickets were still susceptible to tampering and they required an unreasonable level of accuracy when scratching off a first layer in order to not invalidate the ticket by inadvertently exposing too much of an adjacent location, by providing means for protecting and/or preserving a predetermined transaction/message/layer in such a manner that transaction activated by a game player/user can be monitored and/or tracked. Furthermore, by not contributing (limiting) to produce of instant ticket type of game cards, arguably, as once alleged that would release chemical compositions into our environment and have been found to kill fish, does not directly associated with such "*improve*" aspects, as Petitioners' sought after.

Accordingly, the Petition is **DISMISSED**. The application file is being forwarded to Central Files to await examination in its proper turn based on its effective filing date.

It is suggested that Applicant review M.P.E.P. §708.02 regarding other grounds available for filing a petition to make special. In particular, note M.P.E.P. §708.02(VIII): Accelerated Examination, which does not place limitations on the subject matter of the application.

Any request for reconsideration must be filed within TWO MONTHS of the mailing date of this decision.

Any inquiries related to this decision should be directed to the undersigned at (703) 308-0269.

for Josie A. Ballato
Special Programs Examiner
Technology Center 2100
Computer Architecture, Software, and Information Security

TQD

UNITED STATES PATENT AND TRADEMARK OFFICE

COMMISSIONER FOR PATENTS
UNITED STATES PATENT AND TRADEMARK OFFICE
P.O. BOX 1450
ALEXANDRIA, VA 22313-1450
www.uspto.gov

Paper No. 6

Unisys Corporation
Attn: Michael B. Atlass
Unisys Way, MS/E8-114
Blue Bell, PA 19424-0001

COPY MAILED

FEB 23 2004

OFFICE OF PETITIONS

In re Application of :
Steven Hurlock :
Application No. 10/324,451 :
Filed: December 20, 2002 : ON PETITION
Attorney Docket No.: TN263 :

This is a decision on the petition styled "Petition for Revival of an Application for Patent Abandoned Unintentionally or Unavoidably Under 37 CFR 1.137(b)," filed February 11, 2004, which is being treated under 37 CFR 1.181(a) as a Petition to Withdraw the Holding of Abandonment.

The petition, as construed, is **GRANTED**.

The application became abandoned for failure to timely respond to a Notice to File Missing Parts mailed March 26, 2003. The notice required an oath or declaration under 37 CFR 1.63 and the requisite surcharge. A Notice of Abandonment was mailed on February 2, 2004.

In response, on February 11, 2004, the present petition was filed. Petitioner states that an executed declaration under 37 CFR 1.63 and the $130 surcharge under 37 CFR 1.16(e) were filed on April 4, 2003. In support, petitioner submitted a copy of the response and a copy of the facsimile receipt showing the successful transmission of the facsimile on April 4, 2003.

While the original response cannot be located, the evidence is convincing that the response was timely filed by facsimile transmission on April 4, 2003, and subsequently misplaced in the Office. The declaration provided on February 11, 2004 will be used for processing the application and the $130 surcharge is being charged to counsel's deposit account as authorized.

Under the circumstances of this case, no petition fee has been charged. The holding of abandonment is hereby withdrawn and the application is restored to pending status.

The application is being returned to the Office of Initial Patent Examination (OIPE) for further processing.

Telephone inquires related to this decision should be directed to the undersigned at (703) 305-9220. Telephone inquiries related to OIPE processing should be directed to their hotline at (703) 308-1202.

Sherry D. Brinkley
Petitions Examiner
Office of Petitions
Office of the Deputy Commissioner
for Patent Examination Policy

UNITED STATES PATENT AND TRADEMARK OFFICE

COMMISSIONER FOR PATENTS
UNITED STATES PATENT AND TRADEMARK OFFICE
P.O. BOX 1450
ALEXANDRIA, VA 22313-1450
WWW.USPTO.GOV

Paper No.

MAILED

JAN 11 2010

OFFICE OF PETITIONS

ZIMMER TECHNOLOGY - BAKER & DANIELS
111 EAST WAYNE STREET, SUITE 800
FORT WAYNE IN 46802

In re Application of	:	
Phillips et al.	:	
Application No. 10/324,471	:	DECISION ON PETITION
Filed: December 20, 2002	:	PURSUANT TO
Attorney Docket No.: ZIM0125	:	37 C.F.R. § 1.181
Title: PROVISIONAL BONE PLATE	:	

This is a decision on the petition filed May 4, 2009, pursuant to 37 C.F.R. § 1.181, requesting that the holding of abandonment in the above-identified application be withdrawn.

The above-identified application became abandoned due to the January 12, 2009 decision of the Board for Patent Appeals and Interferences which upheld the Examiner's rejections. Accordingly, the above-identified application became abandoned on March 13, 2009, the expiration of the period for seeking judicial review of this decision.[1] A Notice of Abandonment was mailed on April 16, 2009.

With this petition, Petitioner has asserted that the holding of abandonment should be withdrawn due to the fact that no action was required on his part, and has cited to MPEP § 1214.06.

MPEP § 1214.06(II) indicates that subsequent to the rendering of a decision by the Board of Patent Appeals and Interferences, if claims stand allowed:

1 See MPEP § 1216.

> The appellant is not required to file a reply. The examiner issues the application or ex parte reexamination certificate on the claims which stand allowed. For paper files, a red-ink line should be drawn through the refused claims and the notion "Board Decision" written in the margin in red ink.
>
> If the Board affirms a rejection of claim 1, claim 2 was objected to prior to appeal as being allowable except for its dependency from claim 1 and independent claim 3 is allowed, the examiner should cancel claims 1 and 2 and issue the application or ex parte reexamination certificate with claim 3 only.
>
> If the Board affirms a rejection against independent claim 1, reverses all rejections against dependent claim 2 and claim 3 is allowed, after expiration of the period for further appeal, the examiner should either:
>
> (A) Convert dependent claim 2 into independent form by examiner's amendment, cancel claim 1 in which the rejection was affirmed, and issue the application with claims 2 and 3; or
>
> (B) Set a 1-month time limit in which appellant may rewrite dependent claim 2 in independent form. Extensions of time under 37 CFR 1.136(a) will not be permitted. If no timely reply is received, the examiner will cancel claims 1 and 2 and issue the application with allowed claim 3 only. The following form paragraph may be used where appropriate:

The electronic file has been reviewed, and it is clear that "[c]laims 17 and 18 are allowed."[2] Consequently, pursuant to the portion of the MPEP reproduced above, this application should have been remanded to the Examiner for further processing of the allowed claims.

Considering the facts and circumstances of the delay at issue, as set forth on petition, it is concluded that Petitioner has met his burden of establishing no action was necessary on his part.

Accordingly, the petition under 37 C.F.R. § 1.181(a) is **GRANTED**. The holding of abandonment is **WITHDRAWN**.

The Technology Center will be notified of this decision. The Technology Center's support staff will notify the Examiner of this decision, so that the allowed claims can receive further processing in due course.

Petitioner may find it beneficial to view Private PAIR within a fortnight of the present decision to ensure that the withdrawal

---

2 Final Rejection, Office Action Summary. See also Appeal Brief, page 3, section III and Examiner's Answer, page 2, section 3.

of the holding of abandonment has been acknowledged by the Technology Center in response to this decision. It is noted that all inquiries with regard to any failure of that change in status should be directed to the Technology Center where that change of status must be effected - **the Office of Petitions cannot effectuate a change of status.**

Telephone inquiries regarding *this decision* should be directed to the undersigned at (571) 272-3225.[3] All other inquiries concerning examination procedures or status of the application should be directed to the Technology Center.

/Paul Shanoski/
Paul Shanoski
Senior Attorney
Office of Petitions

---

3 Petitioner will note that all practice before the Office should be in writing, and the action of the Office will be based exclusively on the written record in the Office. See 37 C.F.R. § 1.2. As such, Petitioner is reminded that no telephone discussion may be controlling or considered authority for Petitioner's further action(s).

UNITED STATES PATENT AND TRADEMARK OFFICE

Commissioner for Patents
United States Patent and Trademark Office
P.O. Box 1450
Alexandria, VA 22313-1450
www.uspto.gov

HOVEY WILLIAMS, LLP
2405 GRAND BLVD., SUITE 400
KANSAS CITY, MO 64108

COPY MAILED
JAN 20 2006
OFFICE OF PETITIONS

In re Application of :
Sukh Bassi, et. al. :
Application No. 10/324,491 : ON PETITION
Filed: December 18, 2002 :
Attorney Docket No. 30903DIV2 :

This is a decision on the petition under 37 CFR 1.137(b), filed November 2, 2005, to revive the above-identified application.

The petition is **GRANTED**.

The petition satisfies the requirements of 37 CFR 1.137(b) in that petitioner has supplied (1) the reply in the form of a Request for Continued Examination (RCE) under 37 CFR 1.114, with the $395 filing fee; (2) the petition fee of $750; and (3) an adequate statement of unintentional delay.

The Office also acknowledges receipt of an amendment and $285 for a three (3) month extension of time. However, an extension of time under 37 CFR 1.136 must be filed prior to the expiration of the maximum extendable period for reply. See In re Application of S., 8 USPQ2d 1630, 1631 (Comm'r Pats. 1988). Accordingly, since the $285 extension of time was subsequent to the maximum extendable period for reply, this fee is unnecessary and will be credited to petitioner's deposit account.

This application is being revived for consideration of the RCE.

The application file is being referred to Technology Center Art Unit 1762.

Telephone inquiries concerning this decision should be directed to the undersigned at (571) 272-3226.

Andrea Smith
Petitions Examiner
Office of Petitions

UNITED STATES PATENT AND TRADEMARK OFFICE

Commissioner for Patents
United States Patent and Trademark Office
P.O. Box 1450
Alexandria, VA 22313-1450
www.uspto.gov

Paper No.

IMMUNEX CORPORATION
LAW DEPARTMENT
1201 AMGEN COURT WEST
SEATTLE WA 98119

COPY MAILED

JAN 18 2007

OFFICE OF PETITIONS

In re Application of	:	
John Pluenneke	:	DECISION ON APPLICATION
Application No. 10/324,493	:	FOR
Filed: December 19, 2002	:	PATENT TERM ADJUSTMENT
Attorney Docket No. 3005-D	:	

This is a decision on the "APPLICATION FOR PATENT TERM ADJUSTMENT UNDER 37 CFR § 1.705(b)" filed October 27, 2006. Applicants request that the initial determination of patent term adjustment under 35 U.S.C. 154(b)(3)(B)(i) be corrected from five hundred twenty-four (524) days to five hundred twenty-five (525) days.

The application for patent term adjustment is **DISMISSED**.

On July 31, 2006, the Office mailed the Determination of Patent Term Adjustment under 35 U.S.C. 154(b) in the above-identified application. The Notice stated that the patent term adjustment (PTA) to date is 524 days. On October 27, 2006, applicants timely[1] submitted an application for patent term adjustment (with required fee), asserting that the correct number of days of PTA at the time of the mailing of the Notice of Allowance was 525 days. Applicants dispute the reduction of 1 day associated with the filing of a response after non-final on May 8, 2005. Applicants state that as May 7, 2005 fell on a Sunday the response was timely filed pursuant to 1.7 and thus, there should be no reduction.

[1] PALM records indicate that the Issue Fee payment was also received on October 27, 2006.

The record supports a conclusion that the application is not subject to a terminal disclaimer.

Applicants are incorrect. 37 CFR § 1.704(b) provides that:

> With respect to the grounds for adjustment set forth in §§ 1.702(a) through (e), and in particular the ground of adjustment set forth in § 1.702(b), an applicant shall be deemed to have failed to engage in reasonable efforts to conclude processing or examination of an application for the cumulative total of any periods of time in excess of three months that are taken to reply to any notice or action by the Office making any rejection, objection, argument, or other request, measuring such three-month period from the date the notice or action was mailed or given to the applicant, in which case the period of adjustment set forth in § 1.703 shall be reduced by the number of days, if any, beginning on the day after the date that is three months after the date of mailing or transmission of the Office communication notifying the applicant of the rejection, objection, argument, or other request and ending on the date the reply was filed. The period, or shortened statutory period, for reply that is set in the Office action or notice has no effect on the three-month period set forth in this paragraph.

The issue in determining whether an applicant has failed to engage in reasonable efforts to conclude prosecution within the meaning of §1.704(b) is whether applicant has caused their response to be received in the Office within 3 months of the mailing date of the Office communication. The issue is not timeliness. The period, or shortened statutory period, for reply that is set in the Office action or notice has no effect on the three-month period. 37 CFR 1.7 is relevant for determining timeliness and is not relevant to a determination of whether applicant has failed to engage in reasonable efforts to conclude prosecution or examination. By definition, filing a paper outside of the three-month period is a failure to engage.

As stated in MPEP 2731, applicant may wish to consider the use of the "Express Mail Post Office to Addressee " service of the United States Postal Service (37 CFR 1.10) or facsimile transmission (37 CFR 1.6(d)) for replies to be accorded the earliest possible filing date for patent term adjustment calculations. Alternatively, applicant may choose to mail

correspondence with sufficient time to ensure that the correspondence is received in the Office (and stamped with a date of receipt) before the expiration of the three-month period.

Accordingly, pursuant to § 1.704(b), the period of adjustment was properly reduced by 1 day, the number of days, beginning on May 8, 2006, the day after the date that is three months after the date of mailing of the non-final Office action, and ending on May 8, 2006, the date of filing of the reply.

In view thereof, the correct determination of patent term adjustment at the time of the mailing of the Notice of Allowance is five hundred twenty-four (524) days.

The Office acknowledges submission of the $200.00 fee set forth in 37 CFR 1.18(e). No additional fees are required.

The application is being forwarded to the Publications Division for issuance of a patent. The patent term adjustment indicated on the patent (as shown on the Issue Notification mailed about three weeks prior to patent issuance) will include any additional adjustment accrued both for Office delay in issuing the patent more than four months after payment of the issue fee and satisfaction of all outstanding requirements, and for the Office taking in excess of three years to issue the patent (to the extent that the three-year period does not overlap with periods already accorded).

Telephone inquiries specific to this matter should be directed to the undersigned at (571) 272-3219.

Nancy Johnson
Senior Petitions Attorney
Office of Petitions

UNITED STATES PATENT AND TRADEMARK OFFICE

Commissioner for Patents
United States Patent and Trademark Office
P.O. Box 1450
Alexandria, VA 22313-1450
www.uspto.gov

Paper No.

William H. Hollimon
118 N. Gadsden Street
Tallahassee, FL 32301

COPY MAILED

OCT 2 5 2005

OFFICE OF PETITIONS

In re Application of :
Thomas Joseph : DECISION ON PETITION
Application No. 10/324,508 :
Filed: June 5, 2003 :
Attorney Docket No. 6/346/2 :

This is a decision on the "PETITION FOR REVIVAL OF AN APPLICATION FOR PATENT ABANDONED UNINTENTIONALLY UNDER 1.137(b), filed September 15, 2005.

The petition under § 1.137(b) is **GRANTED**.

The above-identified application became abandoned for failure to timely pay the issue fee (and publication fee) within the three-month statutory period for reply set in the Notice of Allowance mailed March 25, 2005. No extensions of time are permitted for transmitting issue fees (or publication fees). Accordingly, the above-identified application became abandoned on June 26, 2005. A courtesy Notice of Abandonment was mailed on September 15, 2005.

On instant petition, petitioner included the petition fee, the required reply in the form of payment of the issue fee (and publication fee)[1] and a statement that the entire delay was unintentional. Petitioner has, thereby, met the requirements for revival under § 1.137(b).

The Publishing Division has been advised of this decision. The application file has thereby been forwarded to the Publishing Division for processing into a patent.

Telephone inquiries related to this decision should be directed to the undersigned at (571) 272-3219.

Nancy Johnson
Senior Petitions Attorney
Office of Petitions

[1] There was no distinct and concurrent requirement for new drawings.

UNITED STATES PATENT AND TRADEMARK OFFICE

UNITED STATES DEPARTMENT OF COMMERCE
United States Patent and Trademark Office
Address: COMMISSIONER FOR PATENTS
P.O. Box 1450
Alexandria, Virginia 22313-1450
www.uspto.gov

NORTEL NETWORKS LIMITED
3500 CARLING AVENUE
OTTAWA, ON K2H 8E9
CANADA

Mail Date: 04/21/2010

Applicant	: Goran Janevski	: DECISION ON REQUEST FOR
Patent Number	: 7583632	: RECALCULATION of PATENT
Issue Date	: 09/01/2009	: TERM ADJUSTMENT IN VIEW
Appliction No	: 10/324,551	: OF WYETH AND NOTICE OF INTENT TO
Filed	: 12/20/2002	: ISSUE CERTIFICATE OF CORRECTION
		:

The Request for Recalculation is **GRANTED** to the extent indicated.

The patent term adjustment has been determined to be **1899** days. The USPTO will *sua sponte* issue a certificate of correction reflecting the amount of PTA days determined by the recalculation.

Prior to the issuance of the certificate of correction, the USPTO will afford patentee an opportunity to be heard and request reconsideration. Accordingly, patentee has **one month or thirty (30) days**, whichever is longer, to file a request for reconsideration of this patent term adjustment calculation. See 35 U.S.C. 154(b)(3)(B)(ii) and 37 CFR 1.322(a)(4). No extensions of time will be granted under 37 CFR 1.136.

Patentee should use document code PET.OP if electronically filing a request for reconsideration of this patent term adjustment calculation. The patentee must also include the information required by 37 CFR 1.705(b)(2) and the fee required by 37 CFR 1.18(e). If patentee does not file a timely request for reconsideration of this patent term adjustment calculation including the information required by 37 CFR 1.705(b)(2) and the fee required by 37 CFR 1.18(e), the USPTO will issue a certificate of correction reflecting the PTA determination noted above.

Patentee should be aware that in order to preserve the right to review in the United States District Court for the District of Columbia of the USPTO patent term adjustment determination, patentee must ensure that he or she also take the steps required under 35 U.S.C. 154(b)(4)(A) in a timely manner. Nothing in the request for recalculation should be construed as providing an alternative time frame for commencing a civil action under 35 U.S.C. 154(b)(4)(A).

Any questions concerning this decision should be directed to the Office of Patent Legal Administration at 571-272-7702.

UNITED STATES PATENT AND TRADEMARK OFFICE

Commissioner for Patents
United States Patent and Trademark Office
P. O. Box 1450
Alexandria, VA 22313-1450
www. uspto. gov

SUTHERLAND ASBILL & BRENNAN LLP
999 PEACHTREE STREET, N.E.
ATLANTA, GA 30309

COPY MAILED

DEC 0 3 2004

OFFICE OF PETITIONS

In re Application of :
John T. Santini, Jr. et al :
Application No. 10/324,556 : NOTICE
Filed: December 19, 2002 :
Attorney Docket No. 17509-0048

This is a notice regarding your request for acceptance of a fee deficiency submission under 37 CFR 1.28. On September 1, 1998, the Court of Appeals for the Federal Circuit held that 37 CFR 1.28(c) is the sole provision governing the time for correction of the erroneous payment of the issue fee as a small entity. **See DH Technology v. Synergystex International, Inc. 154 F.3d 1333, 47 USPQ2d 1865 (Fed. Cir. Sept. 1, 1998).**

The Office no longer investigates or rejects original or reissue applications under 37 CFR 1.56. **1098 Off. Gaz. Pat. Office 502 (January 3, 1989)**. Therefore, nothing in this Notice is intended to imply that an investigation was done.

Your fee deficiency submission under 37 CFR 1.28 is hereby **ACCEPTED**.

Inquiries related to this communication should be directed to Irvin Dingle at (571) 272-3210.

Irvin Dingle
Petitions Examiner
Office of Petitions
Office of the Deputy Commissioner
for Patent Examination Policy

UNITED STATES PATENT AND TRADEMARK OFFICE

Commissioner for Patents
United States Patent and Trademark Office
P. O. Box 1450
Alexandria, VA 22313-1450
www.uspto.gov

THE PROCTER & GAMBLE COMPANY
INTELLECTUAL PROPERTY DIVISION – WEST BLDG.
WINTON HILL BUSINESS CENTER – BOX 412
6250 CENTER HILL AVENUE
CINCINNATI, OH 45224

COPY MAILED

MAR 1 4 2008

OFFICE OF PETITIONS

In re Application of :
Von Adoniram Kinsey et al :
Application No. 10/324,559 : ON PETITION
Filed: December 13, 2002 :
Attorney Docket No. 8817M2

This is a decision on the petition, filed March 12, 2008 under 37 CFR 1.313(c)(2) to withdraw the above-identified application from issue after payment of the issue fee.

The petition is **GRANTED**.

The above-identified application is withdrawn from issue for consideration of a submission under 37 CFR 1.114 (request for continued examination). See 37 CFR 1.313(c)(2).

Petitioner is advised that the issue fee paid on October 30, 2007 in the above-identified application cannot be refunded. If, however, the above-identified application is again allowed, petitioner may request that it be applied towards the issue fee required by the new Notice of Allowance.[1]

Telephone inquiries should be directed to Irvin Dingle at (571) 272-3210.

This matter is being referred to Technology Center AU 1734 for processing of the request for continued examination under 37 CFR 1.114 and for consideration of the concurrently filed Information Disclosure Statement.

Irvin Dingle
Petitions Examiner
Office of Petitions

[1] The request to apply the issue fee to the new Notice may be satisfied by completing and returning the new Issue Fee Transmittal Form PTOL-85(b), which includes the following language thereon: Commissioner for Patents is requested to apply the Issue Fee and Publication Fee (if any) or re-apply any previously paid issue fee to the application identified above. Petitioner is advised that, whether a fee is indicated as being due or not, the Issue Fee Transmittal Form **must** be completed and timely submitted to avoid abandonment. Note the language in bold text on the first page of the Notice of Allowance and Fee(s) Due (PTOL-85).

UNITED STATES PATENT AND TRADEMARK OFFICE

Commissioner for Patents
United States Patent and Trademark Office
P.O. Box 1450
Alexandria, VA 22313-1450
www.uspto.gov

COPY MAILED

MAY 12 2008

OFFICE OF PETITIONS

THE PROCTER & GAMBLE COMPANY
INTELLECTUAL PROPERTY DIVISION - WEST BLDG.
WINTON HILL BUSINESS CENTER - BOX 412
6250 CENTER HILL AVENUE
CINCINNATI OH 45224

In re Application of	:	
Von Adoniram Kinsey et al	:	
Application No. 10/324,559	:	DECISION DISMISSING
Filed: December 13, 2002	:	PETITION
Attorney Docket No. 8817M2	:	

This is a decision on the petition filed October 18, 2007 which is treated as a petition under 37 CFR 1.10(d) , requesting that the above-identified application be accorded a filing date of December 19, 2002, rather than the presently accorded date of December 13, 2002. In addition this is being treated as a petition under 37 CFR 1.183 to waive the promptly filed requirement of a petition under 37 CFR 1.10(d).

The petition under 37 CFR 1.10(d) is **DISMISSED**.

The petition under 37 CFR 1.183 is **DISMISSED**.

Any request for reconsideration of this decision should be filed within **TWO MONTHS** of the date of this decision in order to be considered timely (see 37 CFR 1.181(f)). No extensions of time pursuant to the provisions of 37 CFR 1.136 are permitted. If reconsideration is not requested within the time period specified above, this application will be referred to the Office of Patent Publication with the presently accorded filing date of December 13, 2002.

Any person filing correspondence under this section that was received by the Office and delivered by the "Express Mail Post Office to Addressee" service of the USPS, who can show that the "date-in" on the "Express Mail" mailing label or other official notation entered by the USPS was incorrectly entered or omitted by the USPS, may petition the Director to accord the correspondence a filing date as of the date the correspondence is shown to have been deposited with the USPS.

The showing under 37 CFR 1.10(d) must be corroborated by (1) evidence from the USPS, or (2) evidence that came into being after deposit and within one business day of the deposit of the

correspondence as "Express Mail." Evidence from the USPS may be the "Express Mail" Corporate Account Mailing Statement. Due to the questionable reliability of evidence from a party other than the USPS that did not come into being contemporaneously with the deposit of the correspondence with the USPS, 37 CFR 1.10(d) specifically requires that any petition under 37 CFR 1.10(d) be corroborated either by evidence from the USPS, or by evidence that came into being after deposit and within one business day after the deposit of the correspondence as "Express Mail." Evidence that came into being within one day after the deposit of the correspondence as "Express Mail" may be in the form of a log book which contains information such as the "Express Mail" number; the application number, attorney docket number or other such file identification number; the place, date and time of deposit; the time of the last scheduled pick up for that date and place of deposit; the depositor's initials or signature; and the date and time of entry in the log. Conversely, evidence created prior to the deposit of the correspondence as "Express Mail" with the USPS (e.g., an application transmittal cover letter, or a client letter prepared prior to the deposit of the correspondence); or created more than one business day after the deposit of the correspondence as "Express Mail" (e.g., an affidavit or declaration prepared more than one business day after the correspondence was deposited with the USPS as "Express Mail") cannot be accepted under the terms of the rule.

Petitioner requests the later filing date on the basis that the application was purportedly deposited in Express Mail service on December 19, 2002, pursuant to the requirements of 37 CFR 1.10. The petition is accompanied by:

(1) a copy of the Express Mail mailing label showing 12/13/02 as the "date in";

(2) a copy of a return post card showing December 19, 2002 as the preprinted "mailed" date and 12/13/02 as the PTO receipt date;

(3) a copy of the application transmittal form with December 19, 2002 as the date of signature of the patent attorney;

(4) a USPS track & confirm form with December 20, 2002 as the PTO delivery date.

A grantable petition under 37 CFR 1.10(d) must include:

(1) The filing of a petition promptly after the person becomes aware that the Office has accorded, or will accord, a filing date based upon an incorrect entry by the USPS;

(2) The placement of the "Express Mail" number on the mailing label of the paper(s) or fee(s) that constitutes the correspondence prior to the original mailing by "Express Mail"; and

(3) A showing which establishes, to the satisfaction of the Director, that the requested filing date was the date the correspondence was deposited in the

"Express Mail Post Office to Addressee" service prior to the last scheduled pickup for that day. Any showing pursuant to this paragraph must be corroborated by evidence from the USPS or that came into being after deposit and within one business day of the deposit of the correspondence in the "Express Mail Post Office to Addressee" service of the USPS.

The petition lacks items (1) and (3).

In regard to item (1) a Response to Request For Corrected Filing Receipt mailed March 3, 2003 which indicated that if there was a discrepancy between the "date in" on the Express Mail label and the actual filing date that a petition to accord a filing date should be directed to the Office of Petitions. The next correspondence in regard to this matter is the instant petition which was filed October 18, 2007. The instant petition was filed almost four years after the original notice regarding correction of filing date and is not considered to be within the meaning of "promptly." The instant petition does request a waiver of this requirement and this request is treated below as a petition under 37 CFR 1.183.

In regard to item (3) petition has not provided any convincing evidence to indicate that the accorded filing date of December 13, 2002 is the incorrect filing date. The Express Mail mailing label clearly shows December 13, 2002 as the "date in". The copy of the post card receipt shows December 19, 2002 as the mailed date but this is a preprinted date, not a date provided by a USPS employee. This same post card shows a USPTO generated date as December 13, 2002. The application transmittal form shows a signature date at the bottom of the form as December 19, 2002 but this is a preprinted date and is not indicative of any mailing transaction. The USPS track & confirm form shows December 20, 2002 as the actual delivery date to the PTO, and is not an indicator of when the application was deposited with the USPS Express Mail service.

Section 1.10(d) permits the Office to correct a USPS "date-in" error when the correspondence is deposited in an Express Mail drop box prior to the last scheduled pickup of the day; that is, the time clearly marked on the Express Mail drop box, including when the box will be cleared for the last time on the date of deposit. The reason the Office considers correspondence to have been filed as of the date of deposit as "Express Mail" is that this date has been verified by a disinterested USPS employee, through the insertion of a "date in," or other official USPS notation, on the "Express Mail" mailing label. Note that the correspondence must be entrusted either to a postal service employee or an Express Mail drop box for the correspondence to have been deposited as Express Mail Post Office to Addressee service of the USPS within the meaning of 37 CFR 1.10(d). *See* Nitto Chemical Industry Co. Ltd. v. Comer, 39 USPQ 1778, 1781-82 (D.D.C. 1994). That is, consignment of Express Mail correspondence to a first class mail bin at the USPS does not properly entrust the correspondence to the custody of the USPS for purposes of 37 CFR 1.10.

For theses reasons, the petition under 37 CFR 1.10(d) is dismissed.

37 CFR 1.183 provides that in an extraordinary situation, when justice requires, any requirement of the regulations which is not a requirement of the statutes may be suspended or waived by the Director or the Director's designee, *sua sponte* or on petition of the interested party, subject to such other requirements as may be imposed. Any petition seeking a decision under this section must be accompanied by the petition fee set forth in 37 CFR 1.17(f).

Petitioner requests that the requirement that a petition under 37 CFR 1.10(d) be **filed promptly** be waived in this instance. 37 CFR 1.10(d)(1) requires that the petition is filed promptly after the person becomes aware that the Office has accorded, or will accord, a filing date based upon an incorrect entry by the USPS. The above referenced application was accorded a filing date of December 13, 2002. The instant petition was filed December 18, 2007 which was five years after the presently accorded filing date. Petitioner indicates that applicant had previously attempted to correct the filing with a letter filed March 17, 2003. The Office responded with a Response to Request for Corrected Filing Receipt mailed March 28, 2003 indicating that applicant needed to file a petition. Petitioner gives no explanation as to why it took so long to file a petition under 37 CFR 1.10(d). In the absence of any facts or explanations as to the late filing of the petition, there is no evidence of an extraordinary circumstance.

For the above reason, the petition under 37 CFR 1.183 is dismissed.

The fee for a petition filed under 37 CFR 1.183 is $400 and this fee has been charged to petitioner's deposit account No. 16-2480 as authorized by Jeffrey Bamber.

Further correspondence with respect to this matter should be addressed as follows:

By Mail:
Mail Stop PETITION
Commissioner for Patents
P. O. Box 1450
Alexandria, VA 22313-1450

By facsimile:
(571) 273-8300
Attn: Office of Petitions

By hand:
U. S. Patent and Trademark Office
Customer Service Window, Mail Stop Petitions
Randolph Building
401 Dulany Street
Alexandria, VA 22314

Telephone inquiries concerning this matter may be directed to Carl Friedman at (571) 272-6842.

Anthony Knight for
David Bucci
Petitions Examiner
Office of Petitions

UNITED STATES PATENT AND TRADEMARK OFFICE

Commissioner for Patents
United States Patent and Trademark Office
P.O. Box 1450
Alexandria, VA 22313-1450
www.uspto.gov

THE PROCTER & GAMBLE COMPANY
INTELLECTUAL PROPERTY DIVISION - WEST BLDG.
WINTON HILL BUSINESS CENTER - BOX 412
6250 CENTER HILL AVENUE
CINCINNATI OH 45224

COPY MAILED

JUN 09 2008

In re Application of	:	
Von Adoniram Kinsey et al	:	
Application No. 10/324,559	:	DECISION DISMISSING
Filed: December 13, 2002	:	PETITION
Attorney Docket No. 8817M2	:	

This is a decision on the renewed petition filed May 16, 2008 which is treated as a petition under 37 CFR 1.10(d) , requesting that the above-identified application be accorded a filing date of December 19, 2002, rather than the presently accorded date of December 13, 2002. In addition this is being treated as a petition under 37 CFR 1.183 to waive the promptly filed requirement of a petition under 37 CFR 1.10(d).

The petition under 37 CFR 1.10(d) is **DISMISSED**.

The petition under 37 CFR 1.183 is **DISMISSED**.

Any request for reconsideration of this decision should be filed within **TWO MONTHS** of the date of this decision in order to be considered timely (see 37 CFR 1.181(f)). No extensions of time pursuant to the provisions of 37 CFR 1.136 are permitted. If reconsideration is not requested within the time period specified above, this application will be referred to the Office of Patent Publication with the presently accorded filing date of December 13, 2002.

Petition under 37 CFR 1.10(d):

Any person filing correspondence under this section that was received by the Office and delivered by the "Express Mail Post Office to Addressee" service of the USPS, who can show that the "date-in" on the "Express Mail" mailing label or other official notation entered by the USPS was incorrectly entered or omitted by the USPS, may petition the Director to accord the correspondence a filing date as of the date the correspondence is shown to have been deposited with the USPS.

The showing under 37 CFR 1.10(d) must be corroborated by (1) evidence from the USPS, or (2) evidence that came into being after deposit and within one business day of the deposit of the correspondence as "Express Mail." Evidence from the USPS may be the "Express Mail" Corporate Account Mailing Statement. Due to the questionable reliability of evidence from a party other than the USPS that did not come into being contemporaneously with the deposit of the correspondence with the USPS, 37 CFR 1.10(d) specifically requires that any petition under 37 CFR 1.10(d) be corroborated either by evidence from the USPS, or by evidence that came into being after deposit and within one business day after the deposit of the correspondence as "Express Mail." Evidence that came into being within one day after the deposit of the correspondence as "Express Mail" may be in the form of a log book which contains information such as the "Express Mail" number; the application number, attorney docket number or other such file identification number; the place, date and time of deposit; the time of the last scheduled pick up for that date and place of deposit; the depositor's initials or signature; and the date and time of entry in the log. Conversely, evidence created prior to the deposit of the correspondence as "Express Mail" with the USPS (e.g., an application transmittal cover letter, or a client letter prepared prior to the deposit of the correspondence); or created more than one business day after the deposit of the correspondence as "Express Mail" (e.g., an affidavit or declaration prepared more than one business day after the correspondence was deposited with the USPS as "Express Mail") cannot be accepted under the terms of the rule.

Petitioner requests the later filing date on the basis that the application was purportedly deposited in Express Mail service on December 19, 2002, pursuant to the requirements of 37 CFR 1.10.

The Petition Decision mailed May 12, 2008 dismissed the petition filed October 18, 2007 for failing to provide items (1) and (3) of 37 CFR 1.10(d).

A grantable petition under 37 CFR 1.10(d) must include:

> (1) The filing of a petition promptly after the person becomes aware that the Office has accorded, or will accord, a filing date based upon an incorrect entry by the USPS;
>
> (2) The placement of the "Express Mail" number on the mailing label of the paper(s) or fee(s) that constitutes the correspondence prior to the original mailing by "Express Mail"; and
>
> (3) A showing which establishes, to the satisfaction of the Director, that the requested filing date was the date the correspondence was deposited in the "Express Mail Post Office to Addressee" service prior to the last scheduled pickup for that day. Any showing pursuant to this paragraph must be corroborated by

evidence from the USPS or that came into being after deposit and within one business day of the deposit of the correspondence in the "Express Mail Post Office to Addressee" service of the USPS.

The Renewed petition lacks items (1) and (3).

In regard to item (1), the renewed petition addresses the long time lag from the March 30, 2003 Response to Request For Corrected Filing Receipt to the filing of the October 18, 2007 Petition, over four years, by stating that the original attorney handling the case did not file a petition and a subsequent attorney who should have filed the petition, overlooked the need for filing a petition. None of this explains why a petition was not filed when the March 30, 2003 Office correspondence clearly indicated a petition was required to change the filing date. The renewed petition goes on to state that the failure to file a petition was not discovered till a final review of the file after allowable subject matter was indicated. Even this fails to adequately explain petitioner's failure to comply with the Office instructions to file a petition "promptly" if a change in filing date was needed.

In regard to item (3), petitioner has not provided any convincing evidence to indicate that the accorded filing date of December 13, 2002 is the incorrect filing date. The Express Mail mailing label clearly shows December 13, 2002 as the "date in". Petitioner states "Common sense would dictate that applicants would not attempt to change the filing date to a later date, if it were not an error." The fact that the requested date is after the currently accorded filing date is irrelevant. Petitioner filed this petition as a request to correct an "Express Mail" filing date which is a petition under 37 CFR 1.10(d). There is no distinction or special consideration given by the Office if the requested filing date is before or after the accorded filing date. Petitioner argues that if the application had been deposited in the Express Mail service on December 13, 2002, it would not have taken seven days to reach the PTO. This is merely conjecture on petitioner's part as he has provided no corroborating evidence from the USPS to support this position.

For theses reasons, the petition under 37 CFR 1.10(d) is dismissed.

Petition under 37 CFR 1.183:

37 CFR 1.183 provides that in an extraordinary situation, when justice requires, any requirement of the regulations which is not a requirement of the statutes may be suspended or waived by the Director or the Director's designee, *sua sponte* or on petition of the interested party, subject to

such other requirements as may be imposed. Any petition seeking a decision under this section must be accompanied by the petition fee set forth in 37 CFR 1.17(f).

Petitioner requests that the requirement that a petition under 37 CFR 1.10(d) be **filed promptly** be waived in this instance. 37 CFR 1.10(d)(1) requires that the petition is filed promptly after the person becomes aware that the Office has accorded, or will accord, a filing date based upon an incorrect entry by the USPS. The renewed petition gives no further evidence of extraordinary circumstances. The renewed petition confirms that applicant was given adequate instructions on how to request a change in filing date as set forth in the Response to Request For Corrected Filing Receipt mailed March 3, 2003. Applicant's failure to take timely action on the matter through neglect or because a new attorney's inexperience is not an extraordinary circumstance.

For the above reason, the petition under 37 CFR 1.183 is dismissed.

The fee for a petition filed under 37 CFR 1.183 is $400 and this fee has been charged to petitioner's deposit account No. 16-2480 as authorized by Jeffrey Bamber.

Further correspondence with respect to this matter should be addressed as follows:

By Mail:
Mail Stop PETITION
Commissioner for Patents
P. O. Box 1450
Alexandria, VA 22313-1450

By facsimile:
(571) 273-8300
Attn: Office of Petitions

By hand:
U. S. Patent and Trademark Office
Customer Service Window, Mail Stop Petitions
Randolph Building
401 Dulany Street
Alexandria, VA 22314

Telephone inquiries concerning this matter may be directed to Carl Friedman at (571) 272-6842.

David Bucci
Petitions Examiner
Office of Petitions

UNITED STATES PATENT AND TRADEMARK OFFICE

COMMISSIONER FOR PATENTS
UNITED STATES PATENT AND TRADEMARK OFFICE
P.O. BOX 1450
ALEXANDRIA, VA 22313-1450
www.uspto.gov

Paper No. _____

Date : March 21, 2005

TO : Director, Office of Patent Publication

FROM : Office of the Deputy Commissioner
for Patent Examination Policy

SUBJECT : Withdrawal from Issue of

Applicant(s) :Eric Hunt et al
Application No. :10/324,593
Filed :December 19, 2002

The above-identified application has been assigned Patent No. 6,872,822 and an issue date of March 29, 2005.

It is hereby directed that this application be withdrawn from issue at the request of the applicant.

Do not refund the issue fee.

The following erratum should be published in the Official Gazette if the above-identified application is published in the OG of March 29, 2005:

"All reference to Patent No. 6,872,822 to Eric Hunt et al of United Kingdom for 2-(PYRAZOL-3-YL)CARBAPENEM DERIVATIVES appearing in the Official Gazette of March 29, 2005 should be deleted since no patent was granted."

Karen Creasy

Karen Creasy
Petitions Examiner
Office of Petitions
Office of the Deputy Commissioner
for Patent Examination Policy

cc: Paul Harrison, Crystal Park 3-441 (FAX-306-2737)
Deneise Boyd, Crystal Park 2, Suite 1100 (FAX-308-5413)
Mary Louise McAskill, Crystal Park 3-910 (FAX 305-4372)
Niomi Farmer, Crystal Park 3-910 (FAX-305-4372)
Mary E. Johnson (Cookie), P/OCS, CM1-6D07
Duane Davis (CDS), CM1-6A07
Tamara Greene, Crystal Park 3-908

UNITED STATES PATENT AND TRADEMARK OFFICE

Commissioner for Patents
United States Patent and Trademark Office
P.O. Box 1450
Alexandria, VA 22313-1450
www.uspto.gov

GLAXOSMITHKLINE
CORPORATE INTELLECTUAL PROPERTY - UW2220
P.O. BOX 1539
KING OF PRUSSIA PA 19406-0939

COPY MAILED

MAR 21 2005

OFFICE OF PETITIONS

ON PETITION

In re Application of :
Eric Hunt et al :
Application No. 10/324,593 :
Filed: December 19, 2002 :
Attorney Docket No. P30795C1X1C3 :

This is a decision on the petition, filed March 18, 2005, under 37 CFR 1.313(c)(2) to withdraw the above-identified application from issue after payment of the issue fee.

The petition is **GRANTED**.

The above-identified application is withdrawn from issue for consideration of a submission under 37 CFR 1.114 (request for continued examination). See 37 CFR 1.313(c)(2).

Petitioner is advised that the issue fee paid on August 4, 2004 in the above-identified application cannot be refunded. If, however, the above-identified application is again allowed, petitioner may request that it be applied towards the issue fee required by the new Notice of Allowance.[1]

Telephone inquiries should be directed to the undersigned at (571) 272-3208.

The examiner of Technology Center AU 1624 will consider the request for continued examination under 37 CFR 1.114.

Karen Creasy

Karen Creasy
Petitions Examiner
Office of Petitions
Office of the Deputy Commissioner
for Patent Examination Policy

---

[1] The request to apply the issue fee to the new Notice may be satisfied by completing and returning the new Issue Fee Transmittal Form PTOL-85(b), which includes the following language thereon: "Commissioner for Patents is requested to apply the Issue Fee and Publication Fee (if any) or re-apply any previously paid issue fee to the application identified above." Petitioner is advised that, whether a fee is indicated as being due or not, the Issue Fee Transmittal Form **must** be completed and timely submitted to avoid abandonment. Note the language in bold text on the first page of the Notice of Allowance and Fee(s) Due (PTOL-85).

UNITED STATES PATENT AND TRADEMARK OFFICE

Commissioner for Patents
United States Patent and Trademark Office
P.O. Box 1450
Alexandria, VA 22313-1450
www.uspto.gov

Paper No. 9

UNISYS CORPORATION
UNISYS WAY, MS/E8-114
BLUE BELL, PA 19424

COPY MAILED

JUL 2 9 2004

OFFICE OF PETITIONS

In re Application of :
Hurlock :
Application No. 10/324,608 : ON PETITION
Filed: December 20, 2002 :
Attorney Docket No. TN262 :

This decision concerns the February 11, 2003 petition under 37 CFR 1.137(b).

The petition is **GRANTED.**

The application, upon filing, lacked a signed oath or declaration. On March 31, 2003, a "Notice to File Missing Parts of Nonprovisional Application" was mailed by the Office of Initial Patent Examination (OIPE), setting forth an extendable, non-statutory, 2-month reply period. No response was filed on or before October 31, 2003 and no extension of time under 37 CFR 1.136(a) was obtained. The application became abandoned on June 1, 2003.

The petition asserts that a signed declaration was timely filed by facsimile on April 8, 2003 to (703) 746-7239, implying that the application should not have been held abandoned. The petition also asserts re-transmission of a signed declaration on February 11, 2004 to (703) 872-9306.

The Office has verified with OIPE that replies to OIPE notices may only be transmitted by facsimile to (703) 746-9195 or (703) 746-4060 or any other facsimile number specifically provided for in a particular notice. Neither of the 2 numbers where counsel had sent the declaration was recognized by the OIPE. Given that the alleged April 8, 2003 transmission is not in the USPTO file for this application, the Office is unable to conclude that it was properly filed on April 8, 2003. Accordingly, the holding of abandonment in this application will not be withdrawn.

The petition encloses a signed declaration; authorizes the USPTO to charge the $1,330 petition fee and the $130 surcharge for late filing of a properly signed declaration to Deposit Account No. 19-3790; and states in essence that the entire delay in filing the signed declaration from its due date until the filing of a grantable §1.137(b) petition was unintentional. The petition is thus granted.

The application file is being forwarded to Technology Center 2100 for examination in due course.

Telephone inquiries should be directed to the undersigned at (703) 308-0763.

RC Tang
Petitions Attorney
Office of Petitions

UNITED STATES PATENT AND TRADEMARK OFFICE

Commissioner for Patents
United States Patent and Trademark Office
P.O. Box 1450
Alexandria, VA 22313-1450
www.uspto.gov

WITHROW & TERRANOVA, P.L.L.C.
P.O. BOX 1287
CARY, NC 27512

COPY MAILED

FEB 21 2006

OFFICE OF PETITIONS

In re Application of

Dany Sylvain

Application No. 10/324,609

Filed: December 20, 2002

Attorney Docket No. 7000-226

DECISION ON PETITION

This is a decision on the petition under 37 CFR §1.137(b), February 8, 2006, to revive the above-identified application.

The petition is **granted**.

This application became abandoned for failure to timely remit the issue fee of $1,400.00 as required by the Notice of Allowance and Issue Fee Due (the "Notice") mailed November 4, 2005. The Notice set forth a three (3) month statutory period for reply. No response was received within the allowable period. Accordingly, this application became abandoned on February 5, 2006.

The issue fee was received on February 8, 2006.

The application is being forwarded to the Office of Patent Publications for further processing.

Telephone inquiries concerning this matter may be directed to the undersigned at (571) 272-3222.

Kenya A. McLaughlin
Petitions Attorney
Office of Petitions

UNITED STATES PATENT AND TRADEMARK OFFICE

UNITED STATES DEPARTMENT OF COMMERCE
United States Patent and Trademark Office
Address: COMMISSIONER FOR PATENTS
P.O. Box 1450
Alexandria, Virginia 22313-1450
www.uspto.gov

Tarolli, Sundheim, Covell & Tummino L.L.P.
Cisco Systems, Inc.
1300 East Ninth Street
Suite 1700
Cleveland, OH 44114

Mail Date: 06/25/2010

Applicant	: Angelo A. Bione	: DECISION ON REQUEST FOR
Patent Number	: 7639655	: RECALCULATION of PATENT
Issue Date	: 12/29/2009	: TERM ADJUSTMENT IN VIEW
Application No	: 10/324,631	: OF WYETH AND NOTICE OF INTENT TO
Filed	: 12/20/2002	: ISSUE CERTIFICATE OF CORRECTION
		:

The Request for Recalculation is **GRANTED** to the extent indicated.

The patent term adjustment has been determined to be **1441** days. The USPTO will *sua sponte* issue a certificate of correction reflecting the amount of PTA days determined by the recalculation.

Prior to the issuance of the certificate of correction, the USPTO will afford patentee an opportunity to be heard and request reconsideration. Accordingly, patentee has **one month or thirty (30) days**, whichever is longer, to file a request for reconsideration of this patent term adjustment calculation. See 35 U.S.C. 154(b)(3)(B)(ii) and 37 CFR 1.322(a)(4). No extensions of time will be granted under 37 CFR 1.136.

Patentee should use document code PET.OP if electronically filing a request for reconsideration of this patent term adjustment calculation. The patentee must also include the information required by 37 CFR 1.705(b)(2) and the fee required by 37 CFR 1.18(e). If patentee does not file a timely request for reconsideration of this patent term adjustment calculation including the information required by 37 CFR 1.705(b)(2) and the fee required by 37 CFR 1.18(e), the USPTO will issue a certificate of correction reflecting the PTA determination noted above.

Patentee should be aware that in order to preserve the right to review in the United States District Court for the District of Columbia of the USPTO patent term adjustment determination, patentee must ensure that he or she also take the steps required under 35 U.S.C. 154(b)(4)(A) in a timely manner. Nothing in the request for recalculation should be construed as providing an alternative time frame for commencing a civil action under 35 U.S.C. 154(b)(4)(A).

Any questions concerning this decision should be directed to the Office of Patent Legal Administration at 571-272-7702.