UNITED STATES PATENT AND TRADEMARK OFFICE

Commissioner for Patents
United States Patent and Trademark Office
P.O. Box 1450
Alexandria, VA 22313-1450
www.uspto.gov

FINNEGAN, HENDERSON, FARABOW, GARRETT & DUNNER LLP
901 NEW YORK AVENUE, NW
WASHINGTON DC 20001-4413

COPY MAILED
MAR 15 2010

In re Patent No. 7,599,848	:
Weffers et al.	: DECISION ON REQUEST FOR
Issue Date: October 6, 2009	: RECONSIDERATION OF
Application No. 10/365,954	: PATENT TERM ADJUSTMENT
Filed: February 12, 2003	: AND NOTICE OF INTENT
Attorney Docket No. 07781.0063-00	: TO ISSUE CERTIFICATE OF CORRECTION
Title: SYSTEM AND METHODS FOR RISK EVALUATION USING AN OBJECT MEASURE-VALUE IN STRATEGIC PLANNING	:

This is a decision on the petition filed on October 16, 2009, which is being treated as a petition under 37 CFR 1.705(d) requesting that the patent term adjustment indicated on the above-identified patent be corrected to indicate that the term of the above-identified patent is extended or adjusted by one thousand seven hundred fifty-two (1752) days.

The petition to correct the patent term adjustment indicated on the above-identified patent is **GRANTED to the extent indicated herein.**

As the period from the filing date of the request for continued examination (RCE) to the issue date of the patent is not included in the "B" delay period, the over three year period begins on February 13, 2006 and ends on April 26, 2009, the day before the RCE was filed, and is 1169 days. **See** 35 U.S.C. 154(b)(1)(B)(i).

As such, the patent term adjustment is 1751, not 1752 days.

The Office will *sua sponte* issue a certificate of correction. Pursuant to 37 CFR 1.322, the Office will not issue a certificate of correction without first providing assignee or patentee an opportunity to be heard. Accordingly, patentees are given **one (1) month or thirty (30) days**, whichever is longer, from the mail date of this decision to respond. No extensions of time will be granted under § 1.136.

The application is being forwarded to the Certificates of Branch for issuance of a certificate of correction. The Office will issue a certificate of correction indicating that the term of the above-identified patent is extended or adjusted by **one thousand seven hundred fifty-one (1751)** days.

Telephone inquiries specific to this matter should be directed to Petitions Attorney, Charlema Grant at (571) 272-3215.

/ALESIA M. BROWN/

Alesia M. Brown
Petitions Attorney
Office of Petitions

Enclosure: Copy of DRAFT Certificate of Correction

UNITED STATES PATENT AND TRADEMARK OFFICE

CERTIFICATE OF CORRECTION

PATENT : 7,599,848 B2

DATED : **October 6, 2009** **DRAFT**

INVENTOR(S) : Weffers et al.

It is certified that error appears in the above-identified patent and that said Letters Patent is hereby corrected as shown below:

On the cover page,

[*] Notice: Subject to any disclaimer, the term of this patent is extended or adjusted under 35 USC 154(b) by 1153 days

Delete the phrase "by 1153 days" and insert – by 1751 days--

UNITED STATES PATENT AND TRADEMARK OFFICE

UNITED STATES DEPARTMENT OF COMMERCE
United States Patent and Trademark Office
Address: COMMISSIONER FOR PATENTS
P.O. Box 1450
Alexandria, Virginia 22313-1450
www.uspto.gov

FINNEGAN, HENDERSON, FARABOW, GARRETT & DUNNER LLP
901 NEW YORK AVENUE, NW
WASHINGTON, DC 20001-4413

Mail Date: 04/21/2010

Applicant	: Marcus Wefers	: DECISION ON REQUEST FOR
Patent Number	: 7599848	: RECALCULATION of PATENT
Issue Date	: 10/06/2009	: TERM ADJUSTMENT IN VIEW
Appliction No	: 10/365,954	: OF WYETH AND NOTICE OF INTENT TO
Filed	: 02/12/2003	: ISSUE CERTIFICATE OF CORRECTION
		:

The Request for Recalculation is **GRANTED** to the extent indicated.

The patent term adjustment has been determined to be **2349** days. The USPTO will *sua sponte* issue a certificate of correction reflecting the amount of PTA days determined by the recalculation.

Prior to the issuance of the certificate of correction, the USPTO will afford patentee an opportunity to be heard and request reconsideration. Accordingly, patentee has **one month or thirty (30) days**, whichever is longer, to file a request for reconsideration of this patent term adjustment calculation. See 35 U.S.C. 154(b)(3)(B)(ii) and 37 CFR 1.322(a)(4). No extensions of time will be granted under 37 CFR 1.136.

Patentee should use document code PET.OP if electronically filing a request for reconsideration of this patent term adjustment calculation. The patentee must also include the information required by 37 CFR 1.705(b)(2) and the fee required by 37 CFR 1.18(e). If patentee does not file a timely request for reconsideration of this patent term adjustment calculation including the information required by 37 CFR 1.705(b)(2) and the fee required by 37 CFR 1.18(e), the USPTO will issue a certificate of correction reflecting the PTA determination noted above.

Patentee should be aware that in order to preserve the right to review in the United States District Court for the District of Columbia of the USPTO patent term adjustment determination, patentee must ensure that he or she also take the steps required under 35 U.S.C. 154(b)(4)(A) in a timely manner. Nothing in the request for recalculation should be construed as providing an alternative time frame for commencing a civil action under 35 U.S.C. 154(b)(4)(A).

Any questions concerning this decision should be directed to the Office of Patent Legal Administration at 571-272-7702.

UNITED STATES PATENT AND TRADEMARK OFFICE

UNITED STATES DEPARTMENT OF COMMERCE
United States Patent and Trademark Office
Address: COMMISSIONER FOR PATENTS
P.O. Box 1450
Alexandria, Virginia 22313-1450
www.uspto.gov

MEDTRONIC, INC.
710 MEDTRONIC PARKWAY NE
MINNEAPOLIS, MN 55432-9924

Mail Date: 04/20/2010

Applicant	: David P. Haas	: DECISION ON REQUEST FOR
Patent Number	: 7579106	: RECALCULATION of PATENT
Issue Date	: 08/25/2009	: TERM ADJUSTMENT IN VIEW
Appliction No	: 10/365,955	: OF WYETH AND NOTICE OF INTENT TO
Filed	: 02/12/2003	: ISSUE CERTIFICATE OF CORRECTION
		:

The Request for Recalculation is **GRANTED** to the extent indicated.

The patent term adjustment has been determined to be **682** days. The USPTO will *sua sponte* issue a certificate of correction reflecting the amount of PTA days determined by the recalculation.

Prior to the issuance of the certificate of correction, the USPTO will afford patentee an opportunity to be heard and request reconsideration. Accordingly, patentee has **one month or thirty (30) days**, whichever is longer, to file a request for reconsideration of this patent term adjustment calculation. See 35 U.S.C. 154(b)(3)(B)(ii) and 37 CFR 1.322(a)(4). No extensions of time will be granted under 37 CFR 1.136.

Patentee should use document code PET.OP if electronically filing a request for reconsideration of this patent term adjustment calculation. The patentee must also include the information required by 37 CFR 1.705(b)(2) and the fee required by 37 CFR 1.18(e). If patentee does not file a timely request for reconsideration of this patent term adjustment calculation including the information required by 37 CFR 1.705(b)(2) and the fee required by 37 CFR 1.18(e), the USPTO will issue a certificate of correction reflecting the PTA determination noted above.

Patentee should be aware that in order to preserve the right to review in the United States District Court for the District of Columbia of the USPTO patent term adjustment determination, patentee must ensure that he or she also take the steps required under 35 U.S.C. 154(b)(4)(A) in a timely manner. Nothing in the request for recalculation should be construed as providing an alternative time frame for commencing a civil action under 35 U.S.C. 154(b)(4)(A).

Any questions concerning this decision should be directed to the Office of Patent Legal Administration at 571-272-7702.

SPE RESPONSE FOR CERTIFICATE OF CORRECTION

Paper No.: X

DATE : **AUGUST 13, 2007**

TO SPE OF : ART UNIT **3752**

SUBJECT : Request for Certificate of Correction for Appl. No.: **10/365,956** Patent No.: **6929194 B2**

A response is requested with respect to a request for a certificate of correction.

With respect to the change(s) requested to correct Office and/or Applicant's errors, should the patent read as shown in the certificate of correction attached herewith or the COCIN document(s), in IFW images for the above-identified patented application? No new matter should be introduced, nor should the scope or meaning of the claims be changed.

If the response is for an IFW, within **7** days, please complete and forward the response, to the employee (named below) via scanning into application images, using document code **COCX**.

DO NOT SENT TO ATTORNEY

If the response is for a paper file wrapper, please complete the response and forward the response with the paper file wrapper, to the employee (named below), within **7** days, to:

Certificates of Correction Branch (CofC)
South Tower - 9A22
Palm Location 7580

LAMONTE NEWSOME
Certificates of Correction Branch
703-308-9390 ext. 112

Thank You For Your Assistance

The request for issuing the above-identified correction(s) is hereby:

Note your decision on the appropriate box.

- ☒ **Approved** — **All** changes apply.
- ☐ **Approved in Part** — Specify below which changes **do not** apply.
- ☐ **Denied** — State the reasons for denial below.

Comments: _____

SPE

3757
Art Unit

SPE Scherbel

SPE RESPONSE FOR CERTIFICATE OF CORRECTION 10/365,956

Paper No.: _____

DATE : 2/7/04

TO SPE OF : ART UNIT 3752

SUBJECT : Request for Certificate of Correction on Patent No.: 6929194

A response is requested with respect to the accompanying request for a certificate of correction.

Please complete this form and return with file, within 7 days to:
Palm location **7580, Certificates of Correction Branch – South Tower – 9A22**
If response is for an IFW, **return to employee (named below) via PUBSCofC Team in MADRAS.**
With respect to the change(s) requested, correcting Office and/or Applicant's errors, should the patent read as shown in the certificate of correction (COCIN)? No new matter should be introduced, nor should the scope or meaning of the claims be changed.

Thank You For Your Assistance

Lamonte M. Newsome
Certificates of Correction Branch
Tel. No. 703-305-8309

The request for issuing the above-identified correction(s) is hereby:
Note your decision on the appropriate box.

- ☒ **Approved** — **All** changes apply.
- ☐ **Approved in Part** — Specify below which changes **do not** apply.
- ☐ **Denied** — State the reasons for denial below.

Comments:

Kevin Shaver
SPE

3752
Art Unit

PTOL-306 (REV. 7/03)

U.S. DEPARTMENT OF COMMERCE Patent and Trademark Office

UNITED STATES PATENT AND TRADEMARK OFFICE

COMMISSIONER FOR PATENTS
UNITED STATES PATENT AND TRADEMARK OFFICE
P.O. BOX 1450
ALEXANDRIA, VA 22313-1450
www.uspto.gov

Paper No. 8

E I DU PONT DE NEMOURS AND COMPANY
LEGAL PATENT RECORDS CENTER
BARLEY MILL PLAZA 25/1128
4417 LANCASTER PIKE
WILMINGTON, DE 19805

COPY MAILED

APR 0 9 2004

OFFICE OF PETITIONS

In re Application of
Caimi et al.
Application No. 10/365,970
Filed: February 13, 2003
Attorney Docket No. BB1341

ON PETITION

This is a decision on the petition under 37 C.F.R. § 1.137(b), filed March 29, 2004, to revive the above-identified application.

The petition is **granted.**

The above-identified application became abandoned for failure to reply in a timely manner to the Notice to File Missing Parts of Application (Notice) mailed May 14, 2003. The Notice set a period for reply of two (2) months from the mail date of the Notice. No extensions of time under the provisions of 37 CFR 1.136(a) were obtained. Accordingly, the above-identified application became abandoned on July 15, 2003. A Notice of Abandonment was mailed on February 10, 2004.

Petitioner has met the requirements to revive the above-identified application pursuant to 37 CFR 1.137(b).

The file is now being forwarded to the Office of Initial Patent Examination for further processing.

Telephone inquiries should be directed to the undersigned at (703) 306-0482.

Liana Chase
Petitions Examiner
Office of Petitions
Office of the Deputy Commissioner
for Patent Examination Policy

UNITED STATES PATENT AND TRADEMARK OFFICE

Commissioner for Patents
United States Patent and Trademark Office
P. O. Box 1450
Alexandria, VA 22313-1450
www.uspto.gov

Paper No. 3

ANDREW F. YOUNG
115 ORCHID ST
FLORAL PARK, NY 11001

COPY MAILED

JUL 2 4 2003

OFFICE OF PETITIONS

In re Application of
Rudiger Bode et al
Application No. 10/365,980
Filed: February 13, 2003
Attorney Docket No. Y3-2

NOTICE

This is a notice regarding your request for acceptance of a fee deficiency submission under 37 CFR 1.28. On September 1, 1998, the Court of Appeals for the Federal Circuit held that 37 CFR 1.28(c) is the sole provision governing the time for correction of the erroneous payment of the issue fee as a small entity. **See DH Technology v. Synergystex International, Inc. 154 F.3d 1333, 47 USPQ2d 1865 (Fed. Cir. Sept. 1, 1998).**

The Office no longer investigates or rejects original or reissue applications under 37 CFR 1.56. **1098 Off. Gaz. Pat. Office 502 (January 3, 1989)**. Therefore, nothing in this Notice is intended to imply that an investigation was done.

Your fee deficiency submission under 37 CFR 1.28 is hereby **ACCEPTED**.

Inquiries related to this communication should be directed to the Office of Petitions Staff at (703) 305-9285.

This file is being forwarded to Technology Center 2800.

Irvin Dingle
Petitions Examiner
Office of Petitions
Office of the Deputy Commissioner
for Patent Examination Policy

UNITED STATES PATENT AND TRADEMARK OFFICE

Commissioner for Patents
United States Patent and Trademark Office
P.O. Box 1450
Alexandria, VA 22313-1450
www.uspto.gov

Glen M. Kubota
Morrison & Foerster LLP
35th Floor
555 W. 5th Street
Los Angeles, CA 90013

COPY MAILED
AUG 0 2 2006
OFFICE OF PETITIONS

In re Application of	:	
Oded Noy et al.	:	
Application No. 10/366,010	:	DECISION ON PETITION
Filed: February 13, 2003	:	TO WITHDRAW
Attorney Docket No. 420492000100	:	FROM RECORD
	:	

This is a decision on the Request to Withdraw as attorney or agent of record under 37 C.F.R. § 1.36(b), filed April 13, 2006.

The request is **NOT APPROVED** as moot.

A review of the file record indicates that the power of attorney to Glenn M. Kubota has been revoked by the assignee of the patent application on May 4, 2006. Accordingly, the request to withdraw under 37 C.F.R. § 1.36(b) is moot.

All future communications from the Office will continue to be directed to the below-listed address until otherwise notified by applicant.

Telephone inquires concerning this decision should be directed to Terri Williams at 571-272-2991.

for David Bucci
Petitions Examiner
Office of Petitions

cc: Wen Liu, Esq.
Liu & Liu
Citigroup Center, Suite 1750
444 South Flower Street
Los Angeles, CA 90071

UNITED STATES PATENT AND TRADEMARK OFFICE

Commissioner for Patents
United States Patent and Trademark Office
P.O. Box 1450
Alexandria, VA 22313-1450
www.uspto.gov

LIU & LIU
444 S. Flower Street, Suite 1750
Los Angeles, CA 90071

MAILED

MAR 02 2010

OFFICE OF PETITIONS

In re Application of	:	
Oded Noy, et al.	:	
Application No. 10/366,010	:	DECISION ON PETITION
Filed: February 13, 2003	:	TO WITHDRAW
Attorney Docket No. 1014/206	:	FROM RECORD
	:	

This is a decision on the Request to Withdraw as attorney or agent of record under 37 C.F.R. § 1.36(b), filed October 7, 2009.

The request is **APPROVED**.

A grantable request to withdraw as attorney/agent of record must be signed by every attorney/agent seeking to withdraw or contain a clear indication that one attorney is signing on behalf of another/others. A request to withdraw will not be approved unless at least 30 (thirty) days would remain between the date of approval and the later of the expiration date of a time to file a response or the expiration date of the maximum time period which can be extended under 37 C.F.R. § 1.136(a).

The request was signed by Wen Liu on behalf of all attorneys of record. All attorneys/agents have been withdrawn. Applicant is reminded that there is no attorney of record at this time.

The correspondence address of record has been changed and the new correspondence address is the address indicated below.

Telephone inquiries concerning this decision should be directed to Terri Johnson at 571-272-2991.

Terri Johnson
Petitions Examiner
Office of Petitions

cc: **Path Reliability, Inc.**
c/o Law Office of Matthew Fladell
723 Ocean Front Walk
Venice, CA 90291

UNITED STATES PATENT AND TRADEMARK OFFICE

UNITED STATES DEPARTMENT OF COMMERCE
United States Patent and Trademark Office
Address: COMMISSIONER FOR PATENTS
P.O. Box 1450
Alexandria, Virginia 22313-1450
www.uspto.gov

APPLICATION NUMBER	FILING OR 371(C) DATE	FIRST NAMED APPLICANT	ATTY. DOCKET NO./TITLE
10/366,010	02/13/2003	Oded Noy	1014/206

CONFIRMATION NO. 9001

POWER OF ATTORNEY NOTICE

26588
LIU & LIU
444 S. FLOWER STREET SUITE 1750
LOS ANGELES, CA 90071

OC000000040360785

Date Mailed: 03/02/2010

NOTICE REGARDING CHANGE OF POWER OF ATTORNEY

This is in response to the Power of Attorney filed 10/07/2009.

- The withdrawal as attorney in this application has been accepted. Future correspondence will be mailed to the new address of record. 37 CFR 1.33.

/tsjohnson/

Office of Data Management, Application Assistance Unit (571) 272-4000, or (571) 272-4200, or 1-888-786-0101

UNITED STATES PATENT AND TRADEMARK OFFICE

COMMISSIONER FOR PATENTS
UNITED STATES PATENT AND TRADEMARK OFFICE
P.O. BOX 1450
ALEXANDRIA, VA 22313-1450
www.uspto.gov

Paper No. 5

Jack C. Munro
Suite 225
28720 Roadside Drive
Agoura Hills, CA 91301

COPY MAILED
OCT 2 4 2003
OFFICE OF PETITIONS

In re Application of

Robyn Marie Johnson

Application No. 10/366,022

Filed: February 12, 2003

Attorney Docket No.

ON PETITION

This is a decision on the petition under 37 CFR 1.182, filed October 8, 2003, to change the name of the sole inventor.

The petition is **GRANTED.**

The name of the sole inventor has been changed from "Robert K. Johnson" to -- **Robyn Marie Johnson**--. A corrected filing receipt is enclosed.

The file is being forwarded to Technology Center 3700 for further processing.

Telephone inquiries concerning this matter may be directed to the undersigned at (703) 305-0010.

Kenya A. McLaughlin
Petitions Attorney
Office of Petitions

Enclosure: Corrected Filing Receipt

UNITED STATES PATENT AND TRADEMARK OFFICE

Commissioner for Patents
United States Patent and Trademark Office
P.O. Box 1450
Alexandria, VA 22313-1450
www.uspto.gov

JIE ZHOU
MORRISON & FOERSTER LLP
755 PAGE MILL ROAD
PALO ALTO CA 94304-1018

COPY MAILED
NOV 25 2009
OFFICE OF PETITIONS

In re Application of	:	
Li et al.	:	DECISION ON PETITION
Application No. 10/366,032	:	TO WITHDRAW
Filed: February 12, 2003	:	FROM RECORD
Attorney Docket No. 415072001600	:	

This is a decision on the Request to Withdraw as attorney or agent of record under 37 C.F.R. § 1.36(b), filed October 6, 2009.

The request is **APPROVED**.

A grantable request to withdraw as attorney/agent of record must be signed by every attorney/agent seeking to withdraw or contain a clear indication that one attorney is signing on behalf of another/others. The Office will require the practitioner(s) to certify that he, she or they have: (1) given reasonable notice to the client, prior to the expiration of the reply period, which the practitioner(s) intends to withdraw from employment; (2) delivered to the client or a duly authorized representative of the client all papers and property (including funds) to which the client is entitled; and (3) notified the client of any replies that may be due and the time frame within which the client must respond, pursuant to 37 CFR 10.40 (c).

The request was signed by Jie Zhou on behalf of all attorneys of record.

All attorneys/agents of record have been withdrawn. Applicants are reminded that there is no attorney of record at this time.

The correspondence address of record remains unchanged.

Currently, there is no outstanding Office action that requires a reply.

Telephone inquires concerning this decision should be directed to the undersigned at (571) 272-7751. All other inquires concerning either the examination or status of the application should be directed to the Technology Center.

Joan Olszewski
Petitions Examiner
Office of Petitions

UNITED STATES PATENT AND TRADEMARK OFFICE

Commissioner for Patents
United States Patent and Trademark Office
P.O. Box 1450
Alexandria, VA 22313-1450
www.uspto.gov

AQUALCOMM INCORPORATED
5775 MOREHOUSE DR.
SAN DIEGO CA 92121

COPY MAILED
SEP 18 2007
OFFICE OF PETITIONS

In re Application of	:
Serguei A. Glazko et al	:
Application No. 10/366,040	: DECISION GRANTING PETITION
Filed: February 13, 2003	: UNDER 37 CFR 1.137(b)
Attorney Docket No. 020504	:

This is a decision on the petition under 37 CFR 1.137(b), filed April 11, 2007, to revive the above-identified application.

The petition is **GRANTED**.

The petition satisfies the conditions for revival pursuant to the provisions of 37 CFR 1.137(b) in that (1) the reply in the form of an amendment; (2) the petition fee; and (3) the required statement of unintentional delay have been received. Accordingly, the reply to the Nonfinal Rejection of October 17, 2005, is accepted as having been unintentionally delayed.

Telephone inquiries concerning this decision should be directed to the undersigned at (571) 272-3208.

This matter is being referred to Technology Center AU 2611.

Karen Creasy

Karen Creasy
Petitions Examiner
Office of Petitions

UNITED STATES PATENT AND TRADEMARK OFFICE

COMMISSIONER FOR PATENTS
UNITED STATES PATENT AND TRADEMARK OFFICE
P.O. BOX 1450
ALEXANDRIA, VA 22313-1450
www.uspto.gov

Paper No. 3

MAIL

APR 2 6 2004

DIRECTOR OFFICE
TECHNOLOGY CENTER 2600

Brent A. Capehart
Capehart Law Firm, PLLC
415 South Boston Ave., Ste 800
Tulsa, OK 74103

In re Application of :
Shannon G. Hankins, et al. :
Application No. 10/366,052 :
Filed: February 13, 2002 :
For: LED DISPLAY AND METHOD TO CREATE SAME :

DECISION ON PETITION TO MAKE SPECIAL

This is a decision on the petition filed January 30, 2004 under 37 CFR §1.102(d) to make the application special.

A grantable petition under 37 CFR §1.102(d) and MPEP §708.02, section II (Infringement), must be accompanied by the required fee and a statement alleging:

(1) that there is an infringing device or product actually on the market or method in use;
(2) that a rigid comparison of the alleged infringing device, product, or method with the claims of the application has been made, and that, in his or her opinion, some of the claims are unquestionably infringed; and
(3) that he or she has made or caused to be made a careful and thorough search of the prior art or has a good knowledge of the pertinent prior art. Further, Applicant must provide a copy of each of the references deemed most closely related to the subject matter encompassed by the claims if the references are not already of record.

The petitioner meets all the above-listed requirements. Accordingly, the petition is **GRANTED**.

The application will retain its special status throughout its entire prosecution, including any appeal to the Board of Patent Appeals and Interferences, subject only to diligent prosecution by the applicant.

The application is being forwarded to the examiner for expedited prosecution.

Kenneth A. Wieder
Special Program Examiner
Technology Center 2600
Communications
(703) 305-4710

UNITED STATES PATENT AND TRADEMARK OFFICE

Commissioner for Patents
United States Patent and Trademark Office
P.O. Box 1450
Alexandria, VA 22313-1450
www.uspto.gov

GREENWALD & BASCH, LLP
349 WEST COMMERCIAL STREET, SUITE 2490
EAST ROCHESTER NY 14445

COPY MAILED

JUN 0 1 2006

OFFICE OF PETITIONS

In re Application of	:	
Wang et al.	:	DECISION ON PETITION
Application No. 10/366,082	:	TO WITHDRAW
Filed: February 13, 2003	:	FROM RECORD
Attorney Docket No. XW-397	:	

This is a decision on the Request to Withdraw as attorney or agent of record under 37 C.F.R. § 1.36(b) filed September 30, 2005, which is being treated as a request to withdraw from employment in a proceeding before the Office under 37 C.F.R. § 10.40.

The request is **APPROVED**.

A review of the file record indicates that Howard J. Greenwald and the attorneys associated with Customer Number 37282: (1) does not have power of attorney in this patent application; and (2) has been employed or otherwise engaged in the proceedings in this patent application. The attorneys associated with Customer Number 37282 may not act in a representative capacity under 37 C.F.R. § 1.34 unless appointed in an acceptable power of attorney under 37 C.F.R. § 1.32(b).

All future communications from the Office will continue to be directed to the first named inventor at the first below-listed address until otherwise properly notified by the applicants.

Telephone inquires concerning this decision should be directed to Petitions Examiner Liana Chase at 571-272-3206.

David Bucc
Petitions Examiner
Office of Petitions

cc:

XINGWU WANG
1886 EAST DRIVE
WELLSVILLE, NY 14895

NANOSET LLC
349 W COMMERCIAL STREET
SUITE 2490
EAST ROCHESTER, NY 14445

UNITED STATES PATENT AND TRADEMARK OFFICE

Commissioner for Patents
United States Patent and Trademark Office
P.O. Box 1450
Alexandria, VA 22313-1450
www.uspto.gov

Paper 10

THE PROCTER & GAMBLE COMPANY
INTELLECTUAL PROPERTY DIVISION
WINTON HILL TECHNICAL CENTER - BOX 161
6110 CENTER HILL AVENUE
CINCINNATI OH 45224

COPY MAILED

JUN 1 8 2004

OFFICE OF PETITIONS

In re Application of
Jiping Wang
Application No. 10/366,086
Filed: February 13, 2003
Attorney Docket No. 8053MXD

Title of Invention:Sulfur Dye Protection Systems and Compositions and Methods Employing Same

DECISION ON PETITION

This is a decision on the petition under 37 CFR §1.137(b) filed April 12, 2004 to revive the above-identified application.

This above-identified application became abandoned for failure to file a response to a non-final Office Action which was mailed on July 9, 2003. The non-final Office Action set a three (3) month shortened statutory period for reply. No extensions of time were obtained under the provisions of 37 CFR §1.136(a). Accordingly, this application became abandoned on October 10, 2003. A Notice of Abandonment was mailed on February 18, 2004.

The requirements for a grantable petition under 37 CFR §1.137(b) have been met. This petition is hereby **Granted**.

A three (3) month extension of time was requested on with the instant petition. However, pursuant to 37 CFR 1.136, an extension of time must be filed prior to the expiration of the maximum extendable period for reply. See In re Application of S., 8 USPQ2d 1630, 1631 (Comm'r Pats. 1988) Petitioner's six (6) month statutory period expired on January 9, 2004.

Petitioner is ineligible for any extensions of time. Accordingly, deposit account 13-3080 is being credited with $475.00.

The Revocation and Substitute Power of Attorney submitted with the petition will not be entered because a review of the record shows a 37 CFR 3.73 (b) statement has not been filed. A courtesy copy of the decision will be provided, however all other correspondence will continue to be mailed to the correspondence address of record until a proper 37 CFR 3.73(b) has been provided.

This application is being forwarded to Technology Center 1700 for further processing of the Amendment submitted with the instant petition.

Telephone inquiries concerning this matter should be directed to the undersigned at (703) 306-0251.

Charlema R. Grant

Charlema R. Grant
Petitions Attorney
Office of Petitions

cc: Timothy M. Kelly
Michael Best & Friedrich LLP
100 East Wisconsin Avenue
Milwaukee, Wisconsin 53202-4108

enclosure

UNITED STATES PATENT AND TRADEMARK OFFICE

Commissioner for Patents
United States Patent and Trademark Office
P.O. Box 1450
Alexandria, VA 22313-1450
www.uspto.gov

WOOD, HERRON & EVANS, LLP
2700 CAREW TOWER
441 VINE STREET
CINCINNATI, OH 45202

COPY MAILED

OCT 0 3 2005

OFFICE OF PETITIONS

In re Patent No. 6,833,555 :
Issue Date: December 21, 2004 :
Application No. 10/366,098 : ON PETITION
Filed: February 13, 2003 :
Patentee: Johann Schenkl :

This is a notice regarding your request for acceptance of a fee deficiency submission under 37 CFR 1.28. On September 1, 1998, the Court of Appeals for the Federal Circuit held that 37 CFR 1.28(c) is the sole provision governing the time for correction of the erroneous payment of the issue fee as a small entity. **See DH Technology v. Synergystex International, Inc. 154 F.3d 1333, 47 USPQ2d 1865 (Fed. Cir. Sept. 1, 1998).**

The Office no longer investigates or rejects original or reissue applications under 37 CFR 1.56. **1098 Off. Gaz. Pat. Office 502 (January 3, 1989)**. Therefore, nothing in this Notice is intended to imply that an investigation was done.

Your fee deficiency submission under 37 CFR 1.28 is hereby **ACCEPTED**.

This application is no longer entitled to small entity status. Accordingly, all future fees paid in this application must be paid at the large entity rate.

Telephone inquiries concerning this decision should be directed to the undersigned at (571) 272-3229.

The application matter is being referred to Files Repository.

Retta Williams

Retta Williams
Petitions Examiner
Office of Petitions
Office of the Deputy Commissioner
for Patent Examination Policy

UNITED STATES PATENT AND TRADEMARK OFFICE

Commissioner for Patents
United States Patent and Trademark Office
P.O. Box 1450
Alexandria, VA 22313-1450
www.uspto.gov

SAMER RAMADAN
15 FINN AVE.
NEWFIELDS, NH 03856

COPY MAILED

FEB 17 2005

OFFICE OF PETITIONS

In re Application of :
Samer Ramadan :
Application No. 10/366,099 : ON PETITION
Filed: February 13, 2003 :
Attorney Docket No. :

This is a decision on the petition under 37 CFR 1.137(b), filed June 4, 2004, to revive the above-identified application.

The petition is **GRANTED.**

The above-identified application became abandoned for failure to reply in a timely manner to the Notice to File Corrected Application Papers mailed April 3, 2003. The Notice set a period for reply of two (2) months from the mail date of the Notice. No extensions of time under the provisions of 37 CFR 1.136(a) were obtained. Accordingly, the above-identified application became abandoned on June 4, 2003.

It is not apparent whether the person signing the statement of unintentional delay was in a position to have firsthand or direct knowledge of the facts and circumstances of the delay at issue. Nevertheless, such statement is being treated as having been made as the result of a reasonable inquiry into the facts and circumstances of such delay. See 37 CFR 10.18(b) and Changes to Patent Practice and Procedure; Final Rule Notice, 62 Fed. Reg. 53131, 53178 (October 10, 1997), 1203 Off. Gaz. Pat. Office 63, 103 (October 21, 1997). In the event that such an inquiry has not been made, petitioner must make such an inquiry. If such inquiry results in the discovery that it is not correct that the entire delay in filing the required reply from the due date for the reply until the filing of a grantable petition pursuant to 37 CFR 1.137(b) was unintentional, petitioner must notify the Office.

There is no indication that the person signing the instant petition was ever given a power of attorney or authorization of agent to prosecute the above-identified application. If the person signing the instant petition desires to receive future correspondence regarding this application, the appropriate power of attorney or authorization of agent must be submitted. While a courtesy copy of this decision is being mailed to the person signing the instant petition, all future

correspondence will be directed to the address currently of record until such time as appropriate instructions are received to the contrary.

Telephone inquiries concerning this decision should be directed to the undersigned at (571) 272-3229.

The application file is being forwarded to the Office of Initial Patent Examination for further processing.

Retta Williams

Retta Williams
Petitions Examiner
Office of Petitions
Office of the Deputy Commissioner
for Patent Examination Policy

cc: Phillip E. Decker
1 New Hampshire Ave., Suite 125
Portsmouth, NH 03801

UNITED STATES PATENT AND TRADEMARK OFFICE

Commissioner for Patents
United States Patent and Trademark Office
P.O. Box 1450
Alexandria, VA 22313-1450
www.uspto.gov

MAIL

JUL 2 5 2005

DIRECTOR OFFICE
TECHNOLOGY CENTER 2600

Qualcomm Incorporated
Patents Department
5775 Morehouse Drive
San Diego CA 92121-1714

In re Application of
BLACK, PETER J., et al.
Application No: 10/366,101
Filed: February 12, 2003
For: **METHOD AND APPARATUS FOR DETERMINING COVERAGE AND SWITCHING BETWEEN OVERLAY COMMUNICATION SYSTEMS**

DECISION ON PETITION TO WITHDRAW HOLDING OF ABANDONMENT

This is a decision on the Petition to Withdraw the Holding of Abandonment filed July 5, 2005, pursuant to 37 C.F.R. § 1.181(a). No fee is required.

This application became abandoned for failure to timely respond to the Non-Final Office Action mailed November 17, 2004. A Notice of Abandonment was mailed June 15, 2005.

Petitioner alleges that the Non-Final Office Action mailed November 17, 2004 was not received.

Based on M.P.E.P. § 711.03(c) *[See also Notice entitled Withdrawing the Holding of Abandonment When Office Actions Are Not received, 1156 O.G. 53 (November 16, 1993)]*, in absence of any irregularity in the mailing of an Office Action, there is a strong presumption that the Office action was properly mailed to practitioner at the address of record. This presumption may be overcome by a showing that the Office action was not in fact received. The showing required to establish the failure to receive an Office communication must include:

(a) a statement from the practitioner stating that the Office communication was not received by the practitioner;

(b) a statement attesting to the fact that a search of the file jacket and docket records indicates that the Office communication was not received; and,

(c) a copy of the docket record where the non-received Office communication would have been entered had it been received and docketed must be attached to and referenced in practitioner's statement.

The showing outlined above may not be sufficient if there are circumstances that point to a conclusion that the Office communication may have been lost after receipt rather than a conclusion that the Office communication was lost in the mail.

A review of the records indicate that the Non-Final Office Action was properly mailed to the practitioner of record at the correspondence address at the time of mailing. Thus, there was no irregularity in mailing of the Non-Final Office Action on the part of the U.S. Patent and Trademark Office.

The allegation of non-receipt is supported by a statement by the petitioner attesting that the Office Action was not received and that a search of the contents of the file jacket and docket records reveal no evidence of receipt. Copies of the docket records have also been included to corroborate petitioner's claim.

The showing offered complies with the requirements of a successful petition to withdraw holding of abandonment due to non-receipt of the Non-Final Office Action as set forth above. Therefore, the Notice of Abandonment is hereby vacated and the holding of abandonment withdrawn.

Accordingly, the petition is **GRANTED.**

A review of the record indicates that an Information Disclosure Statement (IDS) was filed on February 10, 2005. Accordingly, the application file is being forwarded to the examiner for consideration of the IDS. A new action addressing the IDS will be mailed in due course. The time period for response will be set to run from the mailing thereof.

Kenneth A. Wieder
Special Program Examiner
Technology Center 2600
Communications

UNITED STATES PATENT AND TRADEMARK OFFICE

COMMISSIONER FOR PATENTS
UNITED STATES PATENT AND TRADEMARK OFFICE
P.O. BOX 1450
ALEXANDRIA, VA 22313-1450
www.uspto.gov

PATENT COUNSEL
APPLIED MATERIALS, INC.
Legal Affairs Department
P.O. BOX 450A
Santa Clara CA 95052

COPY MAILED

JUN 21 2007

OFFICE OF PETITIONS

In re Application of	:
Thakur, et al.	: DECISION ON PETITION
Application No. 10/366,103	:
Filed: February 12, 2003	:
Atty. Dkt. No.: 6441/P/TCG/W-C/LE	:

This is a decision on the petition under 37 CFR 1.137(b), filed May 24, 2007, to revive the above-identified application.

The petition is **GRANTED**.

This application became abandoned December 21, 2006 for failure to timely submit a proper reply to the final Office action mailed September 20, 2006. The final Office action set a three (3) month shortened statutory period of time for reply. Notice of Abandonment was mailed April 9, 2007.

A grantable petition under 37 CFR 1.137(b) must be accompanied by: (1) the required reply, unless previously filed; (2) the petition fee as set forth in 37 CFR 1.17(l); (3) a showing to the satisfaction of the Commissioner that the entire delay in filing the required reply from the due date for the reply until the filing of a grantable petition pursuant to 37 CFR 1.137(b) was unintentional; and (4) any terminal disclaimer (and fee as set forth in 37 CFR 1.20(d)) required pursuant to 37 CFR 1.137(c).

The instant petition has been reviewed and found in compliance with the provisions of 37 CFR 1.137(b). Accordingly, the failure to timely submit a proper reply to the final Office action is accepted as having been unintentionally delayed.

The correspondence address contained on the instant petition differs from that contained in the record. A courtesy copy of this decision will be mailed to petitioner. However, all future

correspondence will be directed to the address of record until such time as appropriate instructions are received to the contrary.

This application file is being forwarded to Technology Center 1700 for processing of the RCE submitted herewith.

Telephone inquiries concerning this matter may be directed to the undersigned at (571) 272-3205.

Alesia M. Brown
Petitions Attorney
Office of Petitions

CC: Michael A. Bernadicou
Blakely, Sokoloff, Taylor & Zafman, LLP
12400 Wilshire Boulevard, 7th Floor
Los Angeles, California 90025-1030

UNITED STATES PATENT AND TRADEMARK OFFICE

COMMISSIONER FOR PATENTS
UNITED STATES PATENT AND TRADEMARK OFFICE
P.O. BOX 1450
ALEXANDRIA, VA 22313-1450
www.uspto.gov

JAN 28 2004

#4

Connolly Bove Lodge & Hutz LLP
P.O. Box 2207
Wilmington DE 19899-2207

In re Application of
Theresa Preston et al
Serial No.: 10/366,124
Filed: February 13, 2003
For: Female Urinary System

DECISION ON PETITION

This is in response to applicants' petition filed December 29, 2003, to make the above-identified application special under the provisions of 37 CFR 1.102(c), based on the age of the applicant.

Applicant has satisfied the provisions set forth in M.P.E.P. 708.02, IV. Therefore the petition is **GRANTED**.

The application will be forwarded to the examiner for action on the merits commensurate with this decision.

Should there be any questions with regard to this letter please contact John Kittle by letter addressed to the Director, Technology Center 3700/2900, P.O. Box 1450 Alexandria, VA 22313-1450 Washington, DC 20231, or by telephone at (703) 308-0873 or by facsimile transmission at (703) 308-3139.

John E. Kittle

John E. Kittle
Director,
Technology Center 3700/2900

UNITED STATES PATENT AND TRADEMARK OFFICE

Commissioner for Patents
United States Patent and Trademark Office
P.O. Box 1450
Alexandria, VA 22313-1450
www.uspto.gov

MORRISON & FOERSTER LLP
425 MARKET STREET
SAN FRANCISCO, CA 94105-2582

COPY MAILED

MAR 19 2008

OFFICE OF PETITIONS

In re Application of :
Marc K. Hellerstein :
Application No. 10/366,125 : ON PETITION
Filed: February 12, 2003 :
Attorney Docket No. 416272003500

This is a decision on the petition, filed March 16, 2008 under 37 CFR 1.313(c)(2) to withdraw the above-identified application from issue after payment of the issue fee.

The petition is **GRANTED**.

The above-identified application is withdrawn from issue for consideration of a submission under 37 CFR 1.114 (request for continued examination). See 37 CFR 1.313(c)(2).

Petitioner is advised that the issue fee paid on January 7, 2008 in the above-identified application cannot be refunded. If, however, the above-identified application is again allowed, petitioner may request that it be applied towards the issue fee required by the new Notice of Allowance.[1]

Telephone inquiries should be directed to Irvin Dingle at (571) 272-3210.

This matter is being referred to Technology Center AU 1651 for processing of the request for continued examination under 37 CFR 1.114 and for consideration of the concurrently filed amendment.

Irvin Dingle
Petitions Examiner
Office of Petitions

[1] The request to apply the issue fee to the new Notice may be satisfied by completing and returning the new Issue Fee Transmittal Form PTOL-85(b), which includes the following language thereon: Commissioner for Patents is requested to apply the Issue Fee and Publication Fee (if any) or re-apply any previously paid issue fee to the application identified above. Petitioner is advised that, whether a fee is indicated as being due or not, the Issue Fee Transmittal Form **must** be completed and timely submitted to avoid abandonment. Note the language in bold text on the first page of the Notice of Allowance and Fee(s) Due (PTOL-85).

UNITED STATES PATENT AND TRADEMARK OFFICE

Commissioner for Patents
United States Patent and Trademark Office
P.O. Box 1450
Alexandria, VA 22313-1450
www.uspto.gov

BAKER BOTTS L.L.P.
2001 ROSS AVENUE, 6TH FLOOR
DALLAS TX 75201

COPY MAILED
AUG 29 2006
OFFICE OF PETITIONS

In re Application of
Deborah K. Wagner et al. :
Application No. 10/366,129 : ON PETITION
Filed: February 12, 2003 :
Attorney Docket Number: 79-02-003 :
(014208.1583)

This is a decision on the petition under 37 CFR 1.182 filed March 15, 2006, to Change the Name of the Inventor Due to Divorce.

The petition is **GRANTED**.

Petitioner has requested that the inventor formerly known as Deborah W. Jakubowski be listed as Deborah K. Wagner. The petition fee and of how the change was effected, divorce, has been submitted in compliance with 37 CFR 1.182.

In view of the instant request, the following inventor name data will be changed.

Inventor 1) Deborah K. Wagner

This matter is being referred to Technology Center 2151 for further processing.

Telephone inquiries concerning this matter should be directed to the undesigned Petitions Attorney at (571) 272-3212.

Patricia Faison-Ball
Senior Petitions Attorney
Office of Petitions

ATTACHMENT: Corrected Filing Receipt

UNITED STATES PATENT AND TRADEMARK OFFICE

UNITED STATES DEPARTMENT OF COMMERCE
United States Patent and Trademark Office
Address: COMMISSIONER FOR PATENTS
P.O. Box 1450
Alexandria, Virginia 22313-1450
www.uspto.gov

APPL NO.	FILING OR 371 (c) DATE	ART UNIT	FIL FEE REC'D	ATTY.DOCKET NO	DRAWINGS	TOT CLMS	IND CLMS
10/366,129	02/12/2003	2151	880	79-02-003 (014208.1583)	3	12	2

CONFIRMATION NO. 9897
CORRECTED FILING RECEIPT
OC000000020220124
OC000000020220124

35005
BAKER BOTTS L.L.P.
2001 ROSS AVENUE, 6TH FLOOR
DALLAS, TX 75201

Date Mailed: 08/29/2006

Receipt is acknowledged of this regular Patent Application. It will be considered in its order and you will be notified as to the results of the examination. Be sure to provide the U.S. APPLICATION NUMBER, FILING DATE, NAME OF APPLICANT, and TITLE OF INVENTION when inquiring about this application. Fees transmitted by check or draft are subject to collection. Please verify the accuracy of the data presented on this receipt. **If an error is noted on this Filing Receipt, please mail to the Commissioner for Patents P.O. Box 1450 Alexandria Va 22313-1450. Please provide a copy of this Filing Receipt with the changes noted thereon. If you received a "Notice to File Missing Parts" for this application, please submit any corrections to this Filing Receipt with your reply to the Notice. When the USPTO processes the reply to the Notice, the USPTO will generate another Filing Receipt incorporating the requested corrections (if appropriate).**

Applicant(s)

Deborah K. Wagner, Rochester Hills, MI;
Kathryn M. Dodson, Oxford, MI;
Richard J. Burges, Carrollton, TX;
Alan J. Munkacsy, Okemos, MI;
David K. Loo, Birmingham, MI;
Wendy S. Thomson, Bloomfield Hills, MI;

Power of Attorney: The patent practitioners associated with Customer Number **35005**.

Domestic Priority data as claimed by applicant

This appln claims benefit of 60/423,773 11/04/2002

Foreign Applications

If Required, Foreign Filing License Granted: 05/02/2003

The country code and number of your priority application, to be used for filing abroad under the Paris Convention, is US10/366,129

Projected Publication Date: Not Applicable

Non-Publication Request: No

Early Publication Request: No

Title

Method and system for vendor management

Preliminary Class

709

PROTECTING YOUR INVENTION OUTSIDE THE UNITED STATES

Since the rights granted by a U.S. patent extend only throughout the territory of the United States and have no effect in a foreign country, an inventor who wishes patent protection in another country must apply for a patent in a specific country or in regional patent offices. Applicants may wish to consider the filing of an international application under the Patent Cooperation Treaty (PCT). An international (PCT) application generally has the same effect as a regular national patent application in each PCT-member country. The PCT process **simplifies** the filing of patent applications on the same invention in member countries, but **does not result** in a grant of "an international patent" and does not eliminate the need of applicants to file additional documents and fees in countries where patent protection is desired.

Almost every country has its own patent law, and a person desiring a patent in a particular country must make an application for patent in that country in accordance with its particular laws. Since the laws of many countries differ in various respects from the patent law of the United States, applicants are advised to seek guidance from specific foreign countries to ensure that patent rights are not lost prematurely.

Applicants also are advised that in the case of inventions made in the United States, the Director of the USPTO must issue a license before applicants can apply for a patent in a foreign country. The filing of a U.S. patent application serves as a request for a foreign filing license. The application's filing receipt contains further information and guidance as to the status of applicant's license for foreign filing.

Applicants may wish to consult the USPTO booklet, "General Information Concerning Patents" (specifically, the section entitled "Treaties and Foreign Patents") for more information on timeframes and deadlines for filing foreign patent applications. The guide is available either by contacting the USPTO Contact Center at 800-786-9199, or it can be viewed on the USPTO website at http://www.uspto.gov/web/offices/pac/doc/general/index.html.

For information on preventing theft of your intellectual property (patents, trademarks and copyrights), you may wish to consult the U.S. Government website, http://www.stopfakes.gov. Part of a Department of Commerce initiative, this website includes self-help "toolkits" giving innovators guidance on how to protect intellectual property in specific countries such as China, Korea and Mexico. For questions regarding patent enforcement issues, applicants may call the U.S. Government hotline at 1-866-999-HALT (1-866-999-4158).

LICENSE FOR FOREIGN FILING UNDER
Title 35, United States Code, Section 184
Title 37, Code of Federal Regulations, 5.11 & 5.15

GRANTED

The applicant has been granted a license under 35 U.S.C. 184, if the phrase "IF REQUIRED, FOREIGN FILING LICENSE GRANTED" followed by a date appears on this form. Such licenses are issued in all applications where the conditions for issuance of a license have been met, regardless of whether or not a license may be required as set forth in 37 CFR 5.15. The scope and limitations of this license are set forth in 37 CFR 5.15(a) unless an earlier license has been issued under 37 CFR 5.15(b). The license is subject to revocation upon written notification. The date indicated is the effective date of the license, unless an earlier license of similar scope has been granted under 37 CFR 5.13 or 5.14.

This license is to be retained by the licensee and may be used at any time on or after the effective date thereof

unless it is revoked. This license is automatically transferred to any related applications(s) filed under 37 CFR 1.53(d). This license is not retroactive.

The grant of a license does not in any way lessen the responsibility of a licensee for the security of the subject matter as imposed by any Government contract or the provisions of existing laws relating to espionage and the national security or the export of technical data. Licensees should apprise themselves of current regulations especially with respect to certain countries, of other agencies, particularly the Office of Defense Trade Controls, Department of State (with respect to Arms, Munitions and Implements of War (22 CFR 121-128)); the Bureau of Industry and Security, Department of Commerce (15 CFR parts 730-774); the Office of Foreign Assets Control, Department of Treasury (31 CFR Parts 500+) and the Department of Energy.

NOT GRANTED

No license under 35 U.S.C. 184 has been granted at this time, if the phrase "IF REQUIRED, FOREIGN FILING LICENSE GRANTED" DOES NOT appear on this form. Applicant may still petition for a license under 37 CFR 5.12, if a license is desired before the expiration of 6 months from the filing date of the application. If 6 months has lapsed from the filing date of this application and the licensee has not received any indication of a secrecy order under 35 U.S.C. 181, the licensee may foreign file the application pursuant to 37 CFR 5.15(b).

UNITED STATES PATENT AND TRADEMARK OFFICE

COMMISSIONER FOR PATENTS
UNITED STATES PATENT AND TRADEMARK OFFICE
P.O. BOX 1450
ALEXANDRIA, VA 22313-1450
www.uspto.gov

Alan D. Kamrath
Rider, Bennett, Egan & Arundel, LLP
Suite 2000
333 South Seventh Street
Minneapolis, MN 55402

COPY MAILED

AUG 1 0 2004

OFFICE OF PETITIONS

In re Application of :
Richard J. Schoeneck, et al. :
Application No. 10/366,130 :
Filed: February 12, 2003 :
Attorney Docket No. 15983/137C12

NOTICE

This is a notice regarding your request for acceptance of a fee deficiency submission under 37 CFR 1.28. On September 1, 1998, the Court of Appeals for the Federal Circuit held that 37 CFR 1.28(c) is the sole provision governing the time for correction of the erroneous payment of the issue fee as a small entity. **See DH Technology v. Synergystex International, Inc. 154 F.3d 1333, 47 USPQ2d 1865 (Fed. Cir. Sept. 1, 1998).**

The Office no longer investigates or rejects original or reissue applications under 37 CFR 1.56. **1098 Off. Gaz. Pat. Office 502 (January 3, 1989)**. Therefore, nothing in this Notice is intended to imply that an investigation was done.

Your fee deficiency submission under 37 CFR 1.28 is hereby **ACCEPTED**.

The application file does not indicate a change of address has been filed in this case, although the address given on the petition differs from the address of record. A change of address should be filed in this case in accordance with MPEP 601.03. A courtesy copy of this decision is being mailed to the address noted on the petition. However, until otherwise instructed, all future correspondence regarding this application will be mailed solely to the address of record.

Inquiries related to this communication should be directed to the Office of Petitions Staff at (703) 305-9285.

This file is being referred to the Office of Publication for further processing.

Sherry D. Brinkley
Petitions Examiner
Office of Petitions
Office of the Deputy Commissioner
for Patent Examination Policy

cc: Alan D. Kamrath
Nikolai & Mersereau, P.A.
International Centre
900 Second Avenue South
Minneapolis, MN 55402

UNITED STATES PATENT AND TRADEMARK OFFICE

Commissioner for Patents
United States Patent and Trademark Office
P.O. Box 1450
Alexandria, VA 22313-1450
www.uspto.gov

ROBERT W. STROZIER, P.L.L.C.
PO BOX 429
BELLAIRE, TX 77402-0429

COPY MAILED

FEB 08 2007

OFFICE OF PETITIONS

In re Application of :
Lenard M. Lichtenberger :
Application No. 10/366,155 :
Filed: February 13, 2003 :
Attorney Docket No. 96606/15D1 :

ON PETITION

This is a decision on the petition filed, October 11, 2006 under 37 CFR 1.137(b), to revive the above-identified application.

The petition is **GRANTED.**

The above-identified application became abandoned for failure to reply within the meaning of 37 CFR 1.113 in a timely manner to the final Office action mailed June 27, 2005, which set a shortened statutory period for reply of three (3) months. No extension of time under the provisions of 37 CFR 1.136(a) were obtained. Accordingly, the above-identified application became abandoned on September 28, 2005.

The above-identified application is being revived solely for purposes of continuity with a Request For Continued Examination (RCE) filed on October 11, 2006.

Telephone inquiries concerning this decision should be directed to Irvin Dingle at (571) 272-3210.

This matters is being referred to Technology Center AU 1617 for further processing.

Irvin Dingle
Petitions Examiner
Office of Petitions

UNITED STATES PATENT AND TRADEMARK OFFICE

Commissioner for Patents
United States Patent and Trademark Office
P.O. Box 1450
Alexandria, VA 22313-1450
www.uspto.gov

DANN, DORFMAN, HERRELL & SKILLMAN
1601 MARKET STREET, SUITE 2400
PHILADELPHIA PA 19103-2307

COPY MAILED

APR 0 2 2007

OFFICE OF PETITIONS

In re Application of :
Michael K. **WEIBEL** :
Application No. 10/366,165 :
Filed: February 13, 2003 :
Attorney Docket No. 1690-P02616US1 :

DECISION ON PETITION
TO MAKE SPECIAL UNDER
37 CFR 1.102(c)(1)

This is a decision on the petition under 37 CFR 1.102(c)(1), filed March 6, 2007, to make the above-identified application special based on applicant's age as set forth in M.P.E.P. § 708.02, Section IV.

The petition is **GRANTED**.

A grantable petition to make an application special under 37 CFR 1.102(c)(1) and MPEP § 708.02, Section IV: Applicant's Age, must be accompanied by evidence showing that at least one of the applicants is 65 years of age, or more, such as a birth certificate or a statement by applicant. No fee is required.

The instant petition includes the declaration of inventor Michael K. Weibel, attesting to his age. Accordingly, the above-identified application has been accorded "special" status.

Telephone inquiries concerning this decision should be directed to the undersigned at 571-272-7253.

All other inquiries concerning either the examination or status of the application should be directed to the Technology Center.

The application is being forwarded to the Technology Center Art Unit 1618 for action on the merits commensurate with this decision.

Monica A. Graves
Petitions Examiner
Office of Petitions

UNITED STATES PATENT AND TRADEMARK OFFICE

Commissioner for Patents
United States Patent and Trademark Office
P.O. Box 1450
Alexandria, VA 22313-1450
www.uspto.gov

Rader, Fishman & Grauer, PLLC
39533 Woodward Avenue
Suite 140
Bloomfield Hills, MI 48304-0610

COPY MAILED

OCT 18 2007

OFFICE OF PETITIONS

In re Application of	:	
Bruce Zak et al.	:	
Application No. 10/366,168	:	DECISION ON PETITION
Filed: February 13, 2003	:	
Attorney Docket No. 66130-0001	:	

This is a decision on the petition under the unintentional provisions of 37 CFR 1.137(b), filed September 13, 2007, to revive the above-identified application.

The petition is **GRANTED**.

The application became abandoned for failure to reply in a timely manner to the non-final Office action mailed November 15, 2006, which set a shortened statutory period for reply of three (3) months. No extensions of time under the provisions of 37 CFR 1.136(a) were obtained. Accordingly, the application became abandoned on February 16, 2007. A Notice of Abandonment was mailed on July 13, 2007.

The petition satisfies the requirements of 37 CFR 1.137(b) in that petitioner has supplied (1) the reply in the form of an amendment after non-final, (2) the petition fee of $750.00, and (3) an adequate statement of unintentional delay.

Telephone inquiries concerning this decision should be directed to Kimberly Inabinet at (571) 272-4618.

This application is being referred to Technology Center AU 2151 for appropriate action by the Examiner in the normal course of business on the reply received September 13, 2007.

Frances Hicks
Petitions Examiner
Office of Petitions

UNITED STATES PATENT AND TRADEMARK OFFICE

Commissioner for Patents
United States Patent and Trademark Office
P.O. Box 1450
Alexandria, VA 22313-1450
www.uspto.gov

THE PROCTER & GAMBLE COMPANY
INTELLECTUAL PROPERTY DIVISION - WEST BLDG.
WINTON HILL BUSINESS CENTER - BOX 412
6250 CENTER HILL AVENUE
CINCINNATI, OH 45224

COPY MAILED

APR 2 0 2007

OFFICE OF PETITIONS

In re Application of

Buell, et al. :

Application No. 10/366,176

: DECISION ON PETITION

Filed: February 13, 2003

:

Attorney Docket No. AA313D

This is a decision on the petition under 37 CFR 1.137(b), filed, August 29, 2006, to revive the above-identified application.

The petition is **GRANTED**.

The above-cited application became abandoned for failure to reply in a timely manner to the non-final Office action mailed February 24, 2006, which set a shortened statutory period for reply of three (3) months from its mailing date. No extension of time pursuant to 37 CFR 1.136(a) was obtained within the allowable period. Accordingly, the application became abandoned on May 25, 2006. A Notice of Abandonment was mailed April 2, 2007.

The amendment filed September 22, 2006, is noted.

The petition fee of $1,500.00 will be charged to deposit account 16-2480.

The application is being forwarded to Technology Center 3700, GAU 3761 for further processing.

Telephone inquiries concerning this decision should be directed to the undersigned at (571) 272-3222.

Kenya A. McLaughlin
Petitions Attorney
Office of Petitions

UNITED STATES PATENT AND TRADEMARK OFFICE

COMMISSIONER FOR PATENTS
UNITED STATES PATENT AND TRADEMARK OFFICE
P.O. BOX 1450
ALEXANDRIA, VA 22313-1450
www.uspto.gov

Paper No. 5

CARR LAW FIRM, L.L.P.
670 FOUNDERS SQUARE
900 JACKSON STREET
DALLAS TX 75202

COPY MAILED

NOV 1 3 2003

OFFICE OF PETITIONS

In re Application of
Jenkins & Akers
Application No. 10/366,179
Filed: February 13, 2003
Attorney Docket No. HTHC 326002
For: APPARATUS AND METHOD FOR COMPUTERIZED MULTI-MEDIA DATA ORGANIZATION AND TRANSMISSION

: DECISION ACCORDING STATUS
: UNDER 37 CFR 1.47(a)

This is in response to the petition under 37 CFR 1.47(a), filed July 7, 2003 (certificate of mailing date July 1, 2003).[1]

The petition is granted.

Petitioner has shown that the non-signing inventor, Deborah L. Jenkins, has refused to join in the filing of the above-identified application after having been presented with the application papers. Specifically, the statement of facts of Attorney Kevin L. Smith and accompanying exhibits establish that the inventor was mailed and received the application papers, including the specification, claims and drawings, but she refused to sign the declaration in the form it was presented to her. Petitioner has submitted a declaration in compliance with 37 CFR 1.63 and 1.64. The submitted declaration is the same that was filed in parent application no. 09/170,509.

Pursuant to petitioner's authorization, deposit account no. 50-0605 will be charged a $130 fee for filing a petition under 37 CFR 1.47(a).

This application and papers have been reviewed and found in compliance with 37 CFR 1.47(a). This application is hereby accorded Rule 1.47(a) status.

As provided in Rule 1.47(c), this Office will forward notice of this application's filing to the non-signing inventor at the address given in the petition. Notice of the filing of this application will also be published in the Official Gazette.

---

[1] It appears that petitioner has submitted documents with the intention of having an entity with a proprietary interest intervene and make the application on behalf of the non-signing inventor. Petitioner is reminded that when one joint inventor signs, the provisions of 37 CFR 1.47(a) apply. Where 37 CFR 1.47(a) is available, application cannot be made under 37 CFR 1.47(b). MPEP 409.03(b). The portion of the instant submission which pertains to the entity with proprietary interest will be disregarded in the analysis that follows, but will be retained in the application file.

After this decision is mailed, the above-identified application will be forwarded to Technology Center 2600 for examination in due course.

Telephone inquiries should be directed to the undersigned at (703) 308-6712.

E. Shirene Willis

E. Shirene Willis
Senior Petitions Attorney
Office of Petitions

UNITED STATES PATENT AND TRADEMARK OFFICE

COMMISSIONER FOR PATENTS
UNITED STATES PATENT AND TRADEMARK OFFICE
P.O. BOX 1450
ALEXANDRIA, VA 22313-1450
www.uspto.gov

DEBORAH JENKINS
4113 S. HULEN STREET, #423
FORT WORTH, TX 75270

COPY MAILED

NOV 1 3 2003

LETTER OFFICE OF PETITIONS

In re Application of
Jenkins & Akers
Application No. 10/366,179
Filed: February 13, 2003
Attorney Docket No. HTHC 326002
For: APPARATUS AND METHOD FOR COMPUTERIZED MULTI-MEDIA DATA ORGANIZATION AND TRANSMISSION

Dear Ms. Jenkins:

You are named as a joint inventor in the above identified United States patent application, filed under the provisions of 35 U.S.C. 116 (United States Code), and 37 CFR 1.47(a), Rules of Practice in Patent Cases. Should a patent be granted on the application you will be designated therein as a joint inventor.

As a named inventor you are entitled to inspect any paper in the file wrapper of the application, order copies of all or any part thereof (at a prepaid cost per 37 CFR 1.19) or make your position of record in the application. Alternatively, you may arrange to do any of the preceding through a registered patent attorney or agent presenting written authorization from you. If you care to join the application, counsel of record (see below) would presumably assist you. Joining in the application would entail the filing of an appropriate oath or declaration by you pursuant to 37 CFR 1.63.

Requests for information regarding your application should be directed to the File Information Unit at (703)308-2733. Information regarding how to pay for and order a copy of the application, or a specific paper in the application, should be directed to Certification Division at (703)308-9726 or 1(800)972-6382 (outside the Washington D.C. area).

Telephone inquiries regarding this communication should be directed to the undersigned at (703) 308-6712.

E. Shirene Willis

E. Shirene Willis
Senior Petitions Attorney
Office of Petitions

ATTORNEY OF RECORD: CARR LAW FIRM, L.L.P.
670 FOUNDERS SQUARE
900 JACKSON STREET
DALLAS TX 75202

UNITED STATES PATENT AND TRADEMARK OFFICE

COMMISSIONER FOR PATENTS
UNITED STATES PATENT AND TRADEMARK OFFICE
WASHINGTON, D.C. 20231
www.uspto.gov

MAILED

JAN 14 2009

TECHNOLOGY CENTER 2100

1/6/2009

MHKKG/SUN
P.O. BOX 398
AUSTIN TX 78767

In re Application of: PABLA, et al. Application No. 10/366187 Attorney Docket No. 5681-39700 Filed: Feb 13, 2003 For: INFRASTRUCTURE FOR ACCESSING A PEER-TO-PEER NETWORK ENVIRONMENT	)))))	**DECISION ON PETITION TO WITHDRAW RESTRICTION REQUIREMENT UNDER 37 CFR §1.144**

This is a decision on the petition filed Jan 16, 2008 under 37 C.F.R. §1.144 to withdraw an outstanding restriction requirement.

The petition is **DISMISSED AS UNTIMELY**.

RELEVANT PROSECUTION HISTORY

Jan 19, 2007 — An Requirement for Election/Restriction was mailed, restricting claims 1-117 into two groups:

> I. Claims 1 - 23 and 56 - 117, drawn to Computer to Computer protocol implementing, classified in class 709, subclass 230.
>
> II. Claims 24 - 55, drawn to Application Program Interface, classified in class 719, subclass 328.

Feb 17, 2007 — An Election was filed, electing group I (claims 1-23 and 56-117) with traverse, requesting reconsideration of the restriction requirement along with argument against the restriction.

May 03, 2007 — A First Office action on the merit was mailed making the restriction Final and rejecting claims 1-23 and 56-117 under art.

Aug 03, 2007	An amendment was filed including 1) arguments against the art rejection of claims 1-12 and 56-117 and 2) indication that claims 24-55 have not been cancelled, but withdrawn by the Examiner with traversal by the Applicant.
Oct 17, 2007	A Final Office action was mailed, maintaining the art rejection of claims 1-23 and 56-117.
Jan 16, 2008	A Response to the Final Office action arguing the rejection of claims 1-23 and 56-117 and a formal Petition to withdraw the restriction requirement were filed.
Feb 19, 2008	A Notice of Appeal was filed along with a Pre-Appeal Brief conference request.
Mar 12, 2008	An Advisory action was mailed responding to applicant's arguments.
Apr 14, 20008	A Pre-Appeal Conference Decision was mailed to proceed to the Board of Appeal.
Amy 15, 2008	An Appeal Brief was filed appealing the rejection of claims 1-23 and 56-117; claims 24-55 were indicated as withdrawn.

REGULATIONS AND PRACTICE

37 C.F.R. § 1.143 states:

> If the applicant disagrees with the requirement for restriction, he may request reconsideration and withdrawal or modification of the requirement, giving the reasons therefor. (See § 1.111). In requesting reconsideration the applicant must indicate a provisional election of one invention for prosecution, which invention shall be the one elected in the event the requirement becomes final. The requirement for restriction will be reconsidered on such a request. If the requirement is repeated and made final, the examiner will at the same time act on the claims to the invention elected.

37 C.F.R. § 1.144 states:

> **After a final requirement for restriction**, the applicant, in addition to making any reply due on the remainder of the action, **may petition the Commissioner to review**

> **the requirement** ... A petition will not be considered if reconsideration of the requirement was not requested (see § 1.181).

37 C.F.R. § 1.181 (f) states:

> (f) The mere filing of a petition will not stay any period for reply that may be running against the application, nor act as a stay of other proceedings. Any petition under this part **not filed within two months** of the mailing date of the action or notice from which relief is requested **may be dismissed as untimely**, except as otherwise provided. This two-month period is not extendable.

DECISION

37 C.F.R. § 1.144 states that the applicant may petition to the Commissioner after a Final requirement for the restriction. 37 C.F.R. § 1.181 (f) states any petition not filed within two months of the mailing date of the action or notice from which relief is requested may be dismissed as untimely.

In the above-identified application, the Office action dated May 03, 2007 indicated that the restriction was made Final. The response filed Aug 08, 2007 failed to further pursue this issue. Thus the petition is **DISMISSED as UNTIMELY.**

The Office regrets the delay of this decision. The application will be forwarded to the examiner for treatment of the Appeal Brief.

Any inquiry concerning this decision should be directed Kim Huynh whose telephone number is (571) 272-4147.

Jack Harvey, Director
Technology Center 2400
Network, Multiplexing, Cable, and Security

UNITED STATES PATENT AND TRADEMARK OFFICE

UNITED STATES DEPARTMENT OF COMMERCE
United States Patent and Trademark Office
Address: COMMISSIONER FOR PATENTS
P.O. Box 1450
Alexandria, Virginia 22313-1450
www.uspto.gov

APPLICATION NO.	FILING DATE	FIRST NAMED INVENTOR	ATTORNEY DOCKET NO.	CONFIRMATION NO.
10/366,187	02/13/2003	Kuldipsingh A. Pabla	5681-39700	7966

58467 7590 01/15/2009
MHKKG/SUN
P.O. BOX 398
AUSTIN, TX 78767

EXAMINER
NANO, SARGON N

ART UNIT	PAPER NUMBER
2457	

MAIL DATE	DELIVERY MODE
01/15/2009	PAPER

Please find below and/or attached an Office communication concerning this application or proceeding.

The time period for reply, if any, is set in the attached communication.

UNITED STATES PATENT AND TRADEMARK OFFICE

COMMISSIONER FOR PATENTS
UNITED STATES PATENT AND TRADEMARK OFFICE
WASHINGTON, D.C. 20231
www.uspto.gov

MAILED

FEB 06 2009

TECHNOLOGY CENTER 2100

2/5/2009

MHKKG/SUN
P.O. BOX 398
AUSTIN TX 78767

In re Application of: PABLA, et al. Application No. 10/366,187 Attorney Docket No. 5681-39700 Filed: Feb 13, 2003 For: INFRASTRUCTURE FOR ACCESSING A PEER-TO-PEER NETWORK ENVIRONMENT	)))))	**DECISION ON PETITION TO WITHDRAW RESTRICTION REQUIREMENT UNDER 37 CFR §1.144**

This is a decision on the petition filed Jan 16, 2008 under 37 C.F.R. §1.144 to withdraw an outstanding restriction requirement.

The petition is **GRANTED.** The decision mailed Jan 6, 2009 is hereby vacated.

RELEVANT PROSECUTION HISTORY

Jan 19, 2007 — An Requirement for Election/Restriction was mailed, restricting claims 1-117 into two groups:

> I. Claims 1 - 23 and 56 - 117, drawn to Computer to Computer protocol implementing, classified in class 709, subclass 230.
>
> II. Claims 24 - 55, drawn to Application Program Interface, classified in class 719, subclass 328.

Feb 17, 2007 — An Election was filed, electing group I (claims 1-23 and 56-117) with traverse, requesting reconsideration of the restriction requirement along with argument against the restriction.

May 03, 2007 — A First Office action on the merit was mailed including (1) acknowledgment of election with traverse, (2) making the restriction Final without a rebuttal to applicant's arguments, and (3) rejecting elected claims 1-23 and 56-117 under art.

Aug 08, 2007	An amendment was filed including 1) arguments against the art rejection of claims 1-12 and 56-117 and 2) indication that claims 24-55 have not been cancelled, but withdrawn by the Examiner with traversal by the Applicant.
Oct 15, 2007	A Final Office action was mailed, maintaining the art rejection of claims 1-23 and 56-117.
Jan 16, 2008	A Petition was file to request the withdrawal of the restriction requirement along with a Response to the Final Office action.
Feb 19, 2008	A Notice of Appeal was filed along with a Pre-Appeal Brief conference request.
Mar 12, 2008	An Advisory action was mailed responding to applicant's arguments.
Apr 14, 20008	A Pre-Appeal Conference Decision was mailed to proceed to the Board of Appeal.
May 15, 2008	An Appeal Brief was filed appealing the rejection of claims 1-23 and 56-117; claims 24-55 were indicated as withdrawn.

REGULATIONS AND PRACTICE

37 C.F.R. § 1.143 states:

> If the applicant disagrees with the requirement for restriction, he may request reconsideration and withdrawal or modification of the requirement, giving the reasons therefor. (See § 1.111). In requesting reconsideration the applicant must indicate a provisional election of one invention for prosecution, which invention shall be the one elected in the event the requirement becomes final. The requirement for restriction will be reconsidered on such a request. If the requirement is repeated and made final, the examiner will at the same time act on the claims to the invention elected.

37 C.F.R. § 1.144 states:

> **After a final requirement for restriction**, the applicant, in addition to making any reply due on the remainder of the action, may petition the Commissioner to review the requirement. Petition **may be deferred until after final action** on or allowance of claims to the invention elected, but must be filed not later than appeal. A petition

will not be considered if reconsideration of the requirement was not requested (see § 1.181).

MPEP § 803 states:

> Under the statute an application may properly be required to be restricted to one of two or more claimed inventions only if they are able to support separate patents and they are either independent (MPEP § 806.04 - § 806.04(i)) or distinct (MPEP § 806.05 - § 806.05(i)).
> If the search and examination of an entire application can be made without serious burden, the examiner must examine it on the merits, even though it includes claims to independent or distinct inventions.
>
> CRITERIA FOR RESTRICTION BETWEEN PATENTABLY DISTINCT INVENTIONS
> There are two criteria for a proper requirement for restriction between patentably distinct inventions:
> (A) The inventions must be independent (see MPEP § 802.01, § 806.04, § 808.01) or distinct as claimed (see MPEP § 806.05 - § 806.05(i)); **and**
> (B) There must be a serious burden on the examiner if restriction is required (see MPEP § 803.02, § 806.04(a) - § 806.04(i), § 808.01(a), and § 808.02).... For purposes of the initial requirement, a serious burden on the examiner may be *prima facie* shown if the examiner shows by appropriate explanation of separate classification, or separate status in the art, or a different field of search as defined in MPEP § 808.02....

MPEP § 821.01 states:

> Where the initial requirement is traversed, it should be reconsidered. If, upon reconsideration, the examiner is still of the opinion that restriction is proper, it should be repeated and made final in the next Office action. (See MPEP § 803.01.) In doing so, the examiner should reply to the reasons or arguments advanced by applicant in the traverse. Form paragraph 8.25 should be used to make a restriction requirement final.

DECISION

MPEP § 803 sets forth two criteria for a proper restriction requirement between patentably distinct inventions: (A) the inventions must be independent or distinct as claimed and (B) there must be a serious burden on the examiner.

Thus, to be proper, (A) claims 1-23 and 56-117 of group I should be a distinct invention from claims 24-55 of group II; and (B) there must be a serious burden on the examiner to

search and consider the feature "API" beyond the search and consideration required the features in claims 1-13 and 56-117.

As for the requirement (A) above, Petitioner believes that two groups of claims are so closely related that they should remain in the same application and that the two groups, group I (claims 1-23 and 56-117) and group II (claims 24-55), though vary in scope from one another, they also overlap in scope and thus have a single general inventive concept and the same special technical features. Petitioner argues that independent claim 1 (of group I) and independent claim 24 (of group II) are both directed to a "peer computing system" and both recite "a plurality of peer nodes configured to participate in a peer-to-peer environment on a network in accordance with one or more peer-to-peer platform protocols". Moreover, claims 1 and 24 also both recite that one of the plurality of peer nodes is configured to perform one or more peer-to-peer environment functions in accordance with the one or more peer-to-peer platform protocols on behalf of other devices.

As for requirement (B) above, Petitioner believes that there is no serious burden on the examiner to search and consider the feature "API" beyond the search and consideration required the features in claims 1-13 and 56-117. Petitioner indicates that the limitation of API as required in claim 24 does not serve to distinguish the two sets of claims. A review of the claims and specification reveal:

> Claims 1 recites...wireless devices each **configured to communicate** with one or more of the relay/proxy nodes **according to a wireless peer-to-peer infrastructure** to participate as peers in the peer-to-peer environment in accordance with the one or more peer-to-peer platform protocols.
>
> Claim 24 recites a device comprising ... an application **configured to access an Application Programming Interface (API) to communicate** with a relay/proxy node to perform the one or more peer-to-peer environment functions in accordance with the one or more peer-to-peer platform protocols on behalf of the application.
>
> Page 7 of the specification states:
> "In one embodiment, the wireless p2p infrastructure may provide building blocks for wireless devices to communicate with peers in a peer-to-peer network environment through a network node that serves as a relay and proxy for the wireless devices. One embodiment may *provide an Application Programming Interface (API)* to the wireless p2p infrastructure for application developers to develop applications for wireless devices that can participate as peers in a peer-to-peer network environment. In one embodiment, *the wireless p2p infrastructure may include* one or more <u>software modules</u> *that may be installed on a wireless device and to which the wireless p2p infrastructure API* provides an interface. In

one embodiment, these software modules and the API may be implemented according to, or as part of, Sun Microsystems' J2ME platform"

Page 18 of the specification states:
"Note that embodiments of the wireless p2p infrastructure are generally described herein in reference to applications (e.g. J2ME applications) on wireless devices using the wireless p2p infrastructure to participate as peers in a peer-to-peer network environment via one or more relay/proxy services, some embodiments of the *wireless p2p infrastructure may also be used by applications* (e.g. J2SE- or J2ME-based peer applications) on other devices with generally more resources (e.g. desktop computers, laptops, workstations, servers) *to access and use the relay/proxy peers* as described herein, *and/or to use the APIs of the wireless p2p infrastructure* (e.g. J2ME-based APIs) as described herein

It is clear that the only thing that distinguishes claim 1 and 24 are the features of "API" and "wireless p2p infrastructure". The API, as disclosed by the specification, is a function performed by a software module of the wireless p2p infrastructure to participate/communicate in a peer-to-peer network environment. As such the, the examiner would not have been required to search for any particular or unique feature of the API that is not covered by the functionality of the wireless p2p infrastructure.

The petition was filed on Jan 16, 2007, prior to the appeal of May 15, 2008; as such the petition was timely filed.

For the above reasons, the petition is **GRANTED**. The decision mailed Jan 14, 2009 to dismiss the petition is vacated

The restriction requirement is hereby **WITHDRAWN**.

The application will be forwarded to the examiner for consideration on the merits of claims 1-117.

Jack Harvey, Director
Technology Center 2400
Network, Multiplexing, Cable, and Security

UNITED STATES PATENT AND TRADEMARK OFFICE

UNITED STATES DEPARTMENT OF COMMERCE
United States Patent and Trademark Office
Address: COMMISSIONER FOR PATENTS
P.O. Box 1450
Alexandria, Virginia 22313-1450
www.uspto.gov

APPLICATION NO.	FILING DATE	FIRST NAMED INVENTOR	ATTORNEY DOCKET NO.	CONFIRMATION NO.
10/366,187	02/13/2003	Kuldipsingh A. Pabla	5681-39700	7966

58467 7590 02/06/2009
MHKKG/SUN
P.O. BOX 398
AUSTIN, TX 78767

EXAMINER
NANO, SARGON N

ART UNIT	PAPER NUMBER
2457	

MAIL DATE	DELIVERY MODE
02/06/2009	PAPER

Please find below and/or attached an Office communication concerning this application or proceeding.

The time period for reply, if any, is set in the attached communication.

UNITED STATES PATENT AND TRADEMARK OFFICE

COMMISSIONER FOR PATENTS
UNITED STATES PATENT AND TRADEMARK OFFICE
P.O. BOX 1450
ALEXANDRIA, VA 22313-1450
www.uspto.gov

MICHAEL BEST & FRIEDRICH, LLP
100 E WISCONSIN AVENUE
MILWAUKEE, WI 53202

COPY MAILED
JAN 24 2005
OFFICE OF PETITIONS

In re Application of	:	
Jiping Wang	:	
Application No. 10/366,199	:	ON PETITION
Filed: February 13, 2003	:	
Attorney Docket No. 8053MSD2	:	

This is a decision on the petition, filed January 24, 2005, under 37 CFR 1.313(c)(2) to withdraw the above-identified application from issue after payment of the issue fee.

The petition is **GRANTED**.

The above-identified application is withdrawn from issue for consideration of a submission under 37 CFR 1.114 (request for continued examination). See 37 CFR 1.313(c)(2).

Petitioner is advised that the issue fee paid on December 3, 2004, in the above-identified application cannot be refunded. If, however, the above-identified application is again allowed, petitioner may request that it be applied towards the issue fee required by the new Notice of Allowance. [1]

Telephone inquiries relating to this decision should be directed to the undersigned at (571) 272-3204.

The application is being referred to Technology Center AU 1751 for further processing of the request for continued examination under 37 CFR 1.114.

Sherry D. Brinkley
Petitions Examiner
Office of Petitions
Office of the Deputy Commissioner
for Patent Examination Policy

[1]The request to apply the issue fee to the new Notice may be satisfied by completing and returning the new Issue Fee Transmittal Form PTOL-85(b), which includes the following language thereon: "Commissioner for Patents is requested to apply the Issue Fee and Publication Fee (if any) or re-apply any previously paid issue fee to the application identified above." Petitioner is advised that, whether a fee is indicated as being due or not, the Issue Fee Transmittal Form **must** be completed and timely submitted to avoid abandonment. Note the language in bold text on the first page of the Notice of Allowance and Fee(s) Due (PTOL-85).

UNITED STATES PATENT AND TRADEMARK OFFICE

Commissioner for Patents
United States Patent and Trademark Office
P.O. Box 1450
Alexandria, VA 22313-1450
www.uspto.gov

Date : January 24, 2005

TO : Director, Office of Patent Publication

FROM : Office of the Deputy Commissioner for Patent Examination Policy

SUBJECT : Withdrawal from Issue of

Applicant(s) : Jiping Wang
Application No. : 10/366,199
Filed : February 13, 2003

The above-identified application has been assigned Patent No. 6,846,334 and an issue date of January 25, 2005.

It is hereby directed that this application be withdrawn from issue at the request of the applicant.

Do not refund the issue fee.

The following erratum should be published in the Official Gazette if the above-identified application is published in the OG of January 25, 2005:

"All reference to Patent No. 6,846,334 to JIPING WANG of OHIO for SULFUR DYE PROTECTION SYSTEMS AND COMPOSITIONS AND METHODS EMPLOYING SAME appearing in the Official Gazette of January 25, 2005, should be deleted since no patent was granted."

Sherry D. Brinkley
Petitions Examiner
Office of Petitions
Office of the Deputy Commissioner
for Patent Examination Policy

cc: Paul Harrison, Crystal Park 3-44l (FAX-306-2737)
Deneise Boyd, Crystal Park 2, Suite 1100 (FAX-308-5413)
Mary Louise McAskill, Crystal Park 3-910 (FAX 305-4372)
Niomi Farmer, Crystal Park 3-9l0 (FAX-305-4372)
Mary E. Johnson (Cookie), P/OCS, CM1-6D07
Duane K.Davis, P/OCS, CM1-6A07
Tamara K. Greene, PK3-910

UNITED STATES PATENT AND TRADEMARK OFFICE

COMMISSIONER FOR PATENTS
UNITED STATES PATENT AND TRADEMARK OFFICE
P.O. BOX 1450
ALEXANDRIA, VA 22313-1450
www.uspto.gov

Paper No. 9

MICHAEL BEST & FRIEDRICH, LLP
100 E WISCONSIN AVENUE
MILWAUKEE, WI 53202

COPY MAILED
APR 21 2004
OFFICE OF PETITIONS

In re Application of :
Wang :
Filed: February 13, 2003 : ON PETITION
Application No. 10/366,199 :
Attorney Docket No.: 8053MXD2 :

This is a decision on the petition under 37 CFR 1.137(b), filed April 12, 2004, to revive the above-identified application.

The petition is **GRANTED**.

This application became abandoned October 10, 2003 for failure to timely submit a proper reply to the non-final Office action mailed July 9, 2003. The non-final Office set a three (3) month shortened statutory period of time for reply. No extensions of time in accordance with 37 C.F.R. § 1.136(a) were timely requested. Notice of Abandonment was mailed March 2, 2004.

A grantable petition under 37 CFR 1.137(b) must be accompanied by: (1) the required reply; (2) the petition fee as set forth in 37 CFR 1.17(m); (3) a statement that the entire delay in filing the required reply from the due date of the reply until the filing of a grantable petition was unintentional. The Commissioner may require additional information where there is a question whether the delay was unintentional; and (4) any terminal disclaimer (and fee as set forth in 37 CFR 1.20(d)) required pursuant to paragraph (d) of this section.

The instant petition has been reviewed and found in compliance with the provisions of 37 CFR 1.137(b). Accordingly, the failure to timely reply to the non-final Office action mailed July 9, 2003 is accepted as having been unintentionally delayed.

Pursuant to 37 CFR 1.136, an extension of time must be filed prior to the expiration of the maximum period obtainable for reply to avoid abandonment. Accordingly, since the $475.00 extension of time fee submitted herewith was subsequent to the maximum period obtainable for reply, this fee is unnecessary.

Petitioner may request a refund of the $475.00 by writing to the Finance Office, Refund Section. A copy of this decision should accompany any request for refund.

This application is being forwarded to Technology Center 1700 for further processing.

Telephone inquiries related to this decision may be directed to the undersigned at (703) 305-0310.

Alesia M. Brown
Senior Petitions Attorney
Office of Petitions

UNITED STATES PATENT AND TRADEMARK OFFICE

COMMISSIONER FOR PATENTS
UNITED STATES PATENT AND TRADEMARK OFFICE
P.O. BOX 1450
ALEXANDRIA, VA 22313-1450
www.uspto.gov

Paper No. 7

SYNGENTA CROP PROTECTION, INC.
PATENT AND TRADEMARK DEPARTMENT
410 SWING ROAD
GREENSBORO, NC 27409

COPY MAILED

MAR 0 5 2004

OFFICE OF PETITIONS

In re Application of
Maetzke et al.
Application No. 10/366,212
Filed: February 13, 2003
Attorney Docket No. PH/5-30975B/D1

ON PETITION

This is a decision on the petition under 37 CFR 1.137(b), filed February 20, 2004, to revive the above-identified application.

The petition is **DISMISSED**.

Any request for reconsideration must be submitted within TWO (2) MONTHS from the mail date of this decision. No further petition fee is required for the request. Extensions of time under 37 CFR 1.136(a) are permitted. The reconsideration request should include a cover letter entitled "Renewed Petition under 37 CFR 1.137(b)." This is **not** a final agency action within the meaning of 5 U.S.C. § 704.

The above-identified application became abandoned for failure to reply in a timely manner to the Notice to File Corrected Application Papers (Notice) mailed April 7, 2003. The Notice set a period for reply of two (2) months from the mail date of the Notice. No extensions of time under the provisions of 37 CFR 1.136(a) were obtained. Accordingly, the above-identified application became abandoned on June 8, 2003. A Notice of Abandonment was mailed on February 4, 2004.

A grantable petition under 37 CFR 1.137(b) must be accompanied by:
(1) the required reply,[1]
(2) the petition fee,
(3) a statement that the entire delay in filing the required reply from the due date for the reply until the filing of a grantable petition pursuant to 37 CFR 1.137(b) was unintentional, and
(4) a terminal disclaimer and fee if the application was filed on or before June 8, 1995 or if the application is a design application.

Where there is a question as to whether either the abandonment or the delay in filing a petition

[1] In a nonprovisional application abandoned for failure to prosecute, the required reply may be met by the filing of a continuing application. In an application or patent, abandoned or lapsed for failure to pay the issue fee or any portion thereof, the required reply must be the payment of the issue fee or any outstanding balance thereof.

under 37 CFR 1.137 was unintentional, the Commissioner may require additional information.[2]

The instant petition lacks item (1). Petitioner stated that the required reply to the Notice was included with the instant petition submitted on February 20, 2004. However, after a review of the application file and the documents, it does not appear that a replacement abstract was included. In order to revive the above-identified application, petitioner must supply the replacement abstract.

Further correspondence with respect to this matter should be addressed as follows:

By mail: Mail Stop PETITION
Commissioner for Patents
Post Office Box 1450
Alexandria, VA 22313-1450

Effective December 1, 2003, the Office of Petitions can no longer receive hand-carried correspondence, or facsimile transmissions of correspondence. The centralized location for hand-carried correspondence is the existing Customer Window located at:

2011 South Clark Place
Crystal Plaza 1 Lobby
Room 1B03
Arlington, VA 22202

The centralized facsimile number is **(703) 872-9306.**

Telephone inquiries should be directed to the undersigned at (703) 306-0482.

Liana Chase
Petitions Examiner
Office of Petitions
Office of the Deputy Commissioner
for Patent Examination Policy

---

[2] See MPEP 711.03(c)(III)(C) and (D).

UNITED STATES PATENT AND TRADEMARK OFFICE

COMMISSIONER FOR PATENTS
UNITED STATES PATENT AND TRADEMARK OFFICE
P.O. BOX 1450
ALEXANDRIA, VA 22313-1450
www.uspto.gov

Paper No. 9

SYNGENTA CROP PROTECTION, INC.
PATENT AND TRADEMARK DEPARTMENT
410 SWING ROAD
GREENSBORO, NC 27409

COPY MAILED

APR 0 5 2004

OFFICE OF PETITIONS

In re Application of
Maetzke et al.
Application No. 10/366,212
Filed: February 13, 2003
Attorney Docket No. PH/5-30975B/D1

ON PETITION

This is a decision on the renewed petition under 37 C.F.R. § 1.137(b), filed March 24, 2004, to revive the above-identified application.

The petition is **granted.**

The above-identified application became abandoned for failure to reply in a timely manner to the Notice to File Corrected Application Papers (Notice) mailed April 7, 2003. The Notice set a period for reply of two (2) months from the mail date of the Notice. No extensions of time under the provisions of 37 CFR 1.136(a) were obtained. Accordingly, the above-identified application became abandoned on June 8, 2003. A Notice of Abandonment was mailed on February 4, 2004.

Petitioner has met the requirements to revive the above-identified application pursuant to 37 CFR 1.137(b).

The file is now being forwarded to the Office of Initial Patent Examination for further processing.

Telephone inquiries should be directed to the undersigned at (703) 306-0482.

Liana Chase
Petitions Examiner
Office of Petitions
Office of the Deputy Commissioner
for Patent Examination Policy

UNITED STATES PATENT AND TRADEMARK OFFICE

COMMISSIONER FOR PATENTS
UNITED STATES PATENT AND TRADEMARK OFFICE
P.O. BOX 1450
ALEXANDRIA, VA 22313-1450
www.uspto.gov

PPG INDUSTRIES, INC.
Intellectual Property Department
One PPG Place
Pittsburgh PA 15272

COPY MAILED
AUG 2 4 2007
OFFICE OF PETITIONS

In re Application of	:	
Purdy et al.	:	
Application No. 10/366,222	:	DECISION ON PETITION
Filed: February 13, 2003	:	UNDER 37 CFR 1.78(a)(6)
Attorney Docket No. 1729A1	:	

This is a decision on the PETITION FOR AN UNINTENTIONALLY DELAYED CLAIM OF PRIORITY UNDER 37 CFR 1.78(a)(6), filed August 7, 2007, to accept an unintentionally delayed claim under 35 U.S.C. § 119(e) for the benefit of priority to a prior-filed provisional application.

The petition is **GRANTED**.

A petition under 37 CFR 1.78(a)(6) is only applicable to those applications filed on or after November 29, 2000. Further, the petition is appropriate only after expiration of the period specified in 37 CFR 1.78(a)(5)(ii) and must be filed during the pendency of the nonprovisional application. In addition, the petition must be accompanied by:

(1) the reference required by 35 U.S.C. § 119(e) and 37 CFR 1.78(a)(5)(i) to the prior-filed application, unless previously submitted;
(2) the surcharge set forth in § 1.17(t); and
(3) a statement that the entire delay between the date the claim was due under 37 CFR 1.78(a)(5)(ii) and the date the claim was filed was unintentional. The Director may require additional information. where there is a question whether the delay was unintentional.

This pending nonprovisional application was filed on February 13, 2003, within twelve months of the filing date of the prior-filed provisional application, Application No. 60/356,520, which was filed on February 13, 2002, and for which priority is claimed.

On petition, a reference to the prior-filed provisional application has been included in an executed application data sheet. Petitioner is reminded that any ADS filed after the original filing date of the application is considered a supplemental ADS and should be so titled. See 37 CFR 1.76.

All the above requirements now having been satisfied, the late claim for priority under 35 U.S.C. § 119(e) is accepted as being unintentionally delayed.

The granting of the petition to accept the delayed benefit claim to the prior-filed application under 37 CFR § 1.78(a)(6) should not be construed as meaning that this application is entitled to the benefit of the filing date of the prior-filed application. In order for this application to be entitled to the benefit of the prior-filed application, all other requirements under 35 U.S.C. §119(e) and 37 CFR 1.78(a)(4) and (a)(5) must be met. Similarly, the fact that the corrected Filing Receipt accompanying this decision on petition includes the prior-filed application should not be construed as meaning that applicant is entitled to the claim for benefit of priority to the prior-filed application noted thereon. Accordingly, the examiner will, in due course, consider this benefit claim and determine whether the application is entitled to the benefit of the earlier filing date.

A corrected Filing Receipt, which includes the priority claim to the prior-filed application, accompanies this decision on petition.

Any questions concerning this matter may be directed to the undersigned at (571) 272-3219. All other inquiries concerning either the examination procedures or status of the application should be directed to the Technology Center.

This application is being forwarded to Technology Center Art Unit 1753 for appropriate action on the ADS submitted August 7, 2007, including consideration by the examiner of the claim under

35 U.S.C. §119(e) of the prior-filed provisional application, and for consideration of the amendment filed August 14, 2007.

Nancy Johnson
Senior Petitions Attorney
Office of Petitions

ATTACHMENT: Corrected Filing Receipt

UNITED STATES PATENT AND TRADEMARK OFFICE

UNITED STATES DEPARTMENT OF COMMERCE
United States Patent and Trademark Office
Address: COMMISSIONER FOR PATENTS
P.O. Box 1450
Alexandria, Virginia 22313-1450
www.uspto.gov

APPL NO.	FILING OR 371(c) DATE	ART UNIT	FIL FEE REC'D	ATTY.DOCKET NO	TOT CLMS	IND CLMS
10/366,222	02/13/2003	1753	3202	1729A1	80	11

CONFIRMATION NO. 7691

CORRECTED FILING RECEIPT

OC000000025532686

PPG INDUSTRIES, INC.
Intellectual Property Department
One PPG Place
Pittsburgh, PA 15272

Date Mailed: 08/23/2007

Receipt is acknowledged of this nonprovisional patent application. The application will be taken up for examination in due course. Applicant will be notified as to the results of the examination. Any correspondence concerning the application must include the following identification information: the U.S. APPLICATION NUMBER, FILING DATE, NAME OF APPLICANT, and TITLE OF INVENTION. Fees transmitted by check or draft are subject to collection. Please verify the accuracy of the data presented on this receipt. **If an error is noted on this Filing Receipt, please write to the Office of Initial Patent Examination's Filing Receipt Corrections. Please provide a copy of this Filing Receipt with the changes noted thereon. If you received a "Notice to File Missing Parts" for this application, please submit any corrections to this Filing Receipt with your reply to the Notice. When the USPTO processes the reply to the Notice, the USPTO will generate another Filing Receipt incorporating the requested corrections (if appropriate).**

Applicant(s)

Sean Purdy, Allison Park, PA;
Dennis A. Simpson, Wexford, PA;
Richard J. Foukes, Mars, PA;
David M. Aiken, Clinton, PA;
James P. Rowley, Freeport, PA;

Power of Attorney:

George Cooper--20201
William Uhl--25567
Douglas Hanscom--26600
Julie Meder--36216
Krisanne Shideler--36272
Diane Meyers--38968
Deborah Altman--42259
Jacques Miles--42888

Domestic Priority data as claimed by applicant

This appln claims benefit of 60/356,520 02/13/2002

Foreign Applications

If Required, Foreign Filing License Granted: 04/29/2003

The country code and number of your priority application, to be used for filing abroad under the Paris Convention, is US10/366,222

Projected Publication Date: Not Applicable

Non-Publication Request: No

Early Publication Request: No

Title

Coating line and process for forming a multilayer composite coating on a substrate

Preliminary Class

204

PROTECTING YOUR INVENTION OUTSIDE THE UNITED STATES

Since the rights granted by a U.S. patent extend only throughout the territory of the United States and have no effect in a foreign country, an inventor who wishes patent protection in another country must apply for a patent in a specific country or in regional patent offices. Applicants may wish to consider the filing of an international application under the Patent Cooperation Treaty (PCT). An international (PCT) application generally has the same effect as a regular national patent application in each PCT-member country. The PCT process **simplifies** the filing of patent applications on the same invention in member countries, but **does not result** in a grant of "an international patent" and does not eliminate the need of applicants to file additional documents and fees in countries where patent protection is desired.

Almost every country has its own patent law, and a person desiring a patent in a particular country must make an application for patent in that country in accordance with its particular laws. Since the laws of many countries differ in various respects from the patent law of the United States, applicants are advised to seek guidance from specific foreign countries to ensure that patent rights are not lost prematurely.

Applicants also are advised that in the case of inventions made in the United States, the Director of the USPTO must issue a license before applicants can apply for a patent in a foreign country. The filing of a U.S. patent application serves as a request for a foreign filing license. The application's filing receipt contains further information and guidance as to the status of applicant's license for foreign filing.

Applicants may wish to consult the USPTO booklet, "General Information Concerning Patents" (specifically, the section entitled "Treaties and Foreign Patents") for more information on timeframes and deadlines for filing foreign patent applications. The guide is available either by contacting the USPTO Contact Center at 800-786-9199, or it can be viewed on the USPTO website at http://www.uspto.gov/web/offices/pac/doc/general/index.html.

For information on preventing theft of your intellectual property (patents, trademarks and copyrights), you may wish to consult the U.S. Government website, http://www.stopfakes.gov. Part of a Department of Commerce initiative, this website includes self-help "toolkits" giving innovators guidance on how to protect intellectual property in specific countries such as China, Korea and Mexico. For questions regarding patent enforcement issues, applicants may call the U.S. Government hotline at 1-866-999-HALT (1-866-999-4158).

LICENSE FOR FOREIGN FILING UNDER
Title 35, United States Code, Section 184
Title 37, Code of Federal Regulations, 5.11 & 5.15

GRANTED

The applicant has been granted a license under 35 U.S.C. 184, if the phrase "IF REQUIRED, FOREIGN FILING LICENSE GRANTED" followed by a date appears on this form. Such licenses are issued in all applications where

the conditions for issuance of a license have been met, regardless of whether or not a license may be required as set forth in 37 CFR 5.15. The scope and limitations of this license are set forth in 37 CFR 5.15(a) unless an earlier license has been issued under 37 CFR 5.15(b). The license is subject to revocation upon written notification. The date indicated is the effective date of the license, unless an earlier license of similar scope has been granted under 37 CFR 5.13 or 5.14.

This license is to be retained by the licensee and may be used at any time on or after the effective date thereof unless it is revoked. This license is automatically transferred to any related applications(s) filed under 37 CFR 1.53(d). This license is not retroactive.

The grant of a license does not in any way lessen the responsibility of a licensee for the security of the subject matter as imposed by any Government contract or the provisions of existing laws relating to espionage and the national security or the export of technical data. Licensees should apprise themselves of current regulations especially with respect to certain countries, of other agencies, particularly the Office of Defense Trade Controls, Department of State (with respect to Arms, Munitions and Implements of War (22 CFR 121-128)); the Bureau of Industry and Security, Department of Commerce (15 CFR parts 730-774); the Office of Foreign Assets Control, Department of Treasury (31 CFR Parts 500+) and the Department of Energy.

NOT GRANTED

No license under 35 U.S.C. 184 has been granted at this time, if the phrase "IF REQUIRED, FOREIGN FILING LICENSE GRANTED" DOES NOT appear on this form. Applicant may still petition for a license under 37 CFR 5.12, if a license is desired before the expiration of 6 months from the filing date of the application. If 6 months has lapsed from the filing date of this application and the licensee has not received any indication of a secrecy order under 35 U.S.C. 181, the licensee may foreign file the application pursuant to 37 CFR 5.15(b).

UNITED STATES PATENT AND TRADEMARK OFFICE

COMMISSIONER FOR PATENTS
UNITED STATES PATENT AND TRADEMARK OFFICE
P.O. BOX 1450
ALEXANDRIA, VA 22313-1450
www.uspto.gov

Paul D. Greeley, Esq.
Ohlandt, Greeley, Ruggiero & Perle, L.L.P.
10th Floor
One Landmark Square
Stamford, CT 06901-2682

COPY MAILED

SEP 2 0 2005

OFFICE OF PETITIONS

In re Patent No. 6,797,355 :
Issue Date: September 28, 2004 :
Application No. 10/366,283 : NOTICE
Filed: February 13, 2003 :
Attorney Docket No. 370.7620USV :

This is a notice regarding your request for acceptance of a fee deficiency submission under 37 CFR 1.28. On September 1, 1998, the Court of Appeals for the Federal Circuit held that 37 CFR 1.28(c) is the sole provision governing the time for correction of the erroneous payment of the issue fee as a small entity. **See DH Technology v. Synergystex International, Inc. 154 F.3d 1333, 47 USPQ2d 1865 (Fed. Cir. Sept. 1, 1998).**

The Office no longer investigates or rejects original or reissue applications under 37 CFR 1.56. **1098 Off. Gaz. Pat. Office 502 (January 3, 1989)**. Therefore, nothing in this Notice is intended to imply that an investigation was done.

Your fee deficiency submission under 37 CFR 1.28 is hereby **ACCEPTED**.

This application is no longer entitled to small entity status. Accordingly, all future fees paid in this application must be paid at the large entity rate.

Inquiries related to this communication should be directed to the undersigned at (571) 272-3223.

Marianne E. Jenkins

Marianne E. Jenkins
Petitions Examiner
Office of Petitions

UNITED STATES PATENT AND TRADEMARK OFFICE

COMMISSIONER FOR PATENTS
UNITED STATES PATENT AND TRADEMARK OFFICE
P.O. BOX 1450
ALEXANDRIA, VA 22313-1450
www.uspto.gov

Paper No. 05052005

R. Lewis Gable
Cowan, Liebowiz & Latman, P.C.
1133 Avenue of the Americas
New York, NY 10036

FAX RECEIVED
MAY 26 2005
OFFICE OF PETITIONS

In re Application of :
Berceanu et al
Application No. 10/366284 : ON PETITION
Filed: 2/13/2003 :
Attorney Docket No. 25120.00 :

This is a decision on the petition under 37 CFR 1.137(b), filed 2/7/2005, to revive the above-identified application.

The petition is **GRANTED**.

The above-identified application became abandoned for failure to timely pay the issue fee mailed on 10/28/2004, which set a shortened statutory periof for reply of three months. As no reply was received, this application became abandoned on 1/28/2005.

Petioner has met the requirements for filing a grantable petition under 37 CFR 1.137(b).

This application is being forwarded to the Office of Patent Publication.

Telephone inquiries concerning this decision should be directed to Gene Kim at (571)272-6052, or in his absence, the undersigned at (571)272-3217.

Brian Hearn
Office of Petitions
Office of the Deputy Commissioner
for Patent Examination Policy

UNITED STATES PATENT AND TRADEMARK OFFICE

Commissioner for Patents
United States Patent and Trademark Office
P.O. Box 1450
Alexandria, VA 22313-1450
www.uspto.gov

JJGJR.: 07-06

Paper No: __

COPY MAILED
JUL 10 2006
OFFICE OF PETITIONS

QUARLES & BRADY LLP
411 E. WISCONSIN AVENUE
SUITE 2040
MILWAUKEE WI 53202-4497

In re Application of	:	
Jansen	:	DECISION
Application No.: 10/366,293	:	
Filing Date: 13 February, 2003	:	
Attorney Docket No. 490326.90077	:	

This is a decision on the petition filed on21 November, 2005, as a request to withdraw the holding of abandonment considered under 37 C.F.R.§1.181.

NOTES:

It appears that, since the filing of the original petition, Petitioner has not inquired as to the Status of the instant matter–Petitioner is reminded that the filing of such inquiries at a minimum of three- (3-) month intervals may provide a showing of diligence should the extended delay be questioned (for example, as required under 37 C.F.R. §1.181).

Monitoring of the status of applications on Private PAIR can inform one's management of application responses and provide an indication when mailings of Office actions should be expected.

For the reasons set forth below the petition as considered under 37 C.F.R. §1.181 is **GRANTED**.

BACKGROUND

The record reflects that:

- Petitioner failed to reply timely and properly to the Notice of Allowance/Allowability and Fees Due mailed on 25 May, 2005, with reply due under a non-extendable deadline on or before 25 August, 2005;

- the instant application went abandoned after midnight 25 August, 2005;

- the Office mailed the Notice of Abandonment on 25 October, 2005;

- on 21 November, 2005, Petitioner filed the instant petitions, seeking withdrawal of the holding of abandonment, and averred non-receipt of the original Notice of Allowance/Allowability and Fees Due mailed on 21 December, 2004, but returned by the US Postal Service (USPS) to the Office undelivered on 10 January, 2005, and remailed on 25 May, 2005, and Petitioner averred a review of his office files/jacket/docketing records regarding the instant application and that such review did not evidence receipt of the Notice by his office or its presence in his files, nor did a review of matters due for reply on 25 August, 2005, evidence presence of the Notice;

- out of an abundance of caution, Petitioners always are reminded that the filing of a petition under 37 C.F.R. §1.181 does not toll any periods that may be running any action by the Office and a petition seeking relief under the regulation must be filed within two (2) months of the act complained of (see: 37 C.F.R. §1.181(f)), and those registered to practice *and* all others who make representations before the Office are reminded to inquire into the underlying facts of representations made to the Office and support averments with the appropriate documentation–since all owe to the Office the continuing duty to disclose.[1]

---

[1] See supplement of 17 June, 1999. The Patent and Trademark Office is relying on petitioner's duty of candor and good faith and accepting a statement made by Petitioner. See Changes to Patent Practice and Procedure, 62 Fed. Reg. at 53160 and 53178, 1203 Off. Gaz. Pat. Office at 88 and 103 (responses to comments 64 and 109)(applicant obligated under 37 C.F.R. §10.18 to inquire into the underlying facts and circumstances when providing statements to the Patent and Trademark Office).

Specifically, the regulations at 37 C.F.R. §10.18 provide:

§ 10.18 Signature and certificate for correspondence filed in the Patent and Trademark Office.
(a) For all documents filed in the Office in patent, trademark, and other non-patent matters, except for correspondence that is required to be signed by the applicant or party, each piece of correspondence filed by a practitioner in the Patent and Trademark Office must bear a signature by such practitioner complying with the provisions of §1.4(d), §1.4(e), or § 2.193(c)(1) of this chapter.
(b) By presenting to the Office (whether by signing, filing, submitting, or later advocating) any paper, the party presenting such paper, whether a practitioner or non-practitioner, is certifying that—
(1) All statements made therein of the party's own knowledge are true, all statements made therein on information and belief are believed to be true, and all statements made therein are made with the knowledge that whoever, in any matter within the jurisdiction of the Patent and Trademark Office, knowingly and willfully falsifies, conceals, or covers up by any trick, scheme, or device a material fact, or makes any false, fictitious or fraudulent statements or representations, or makes or uses any false writing or document knowing the same to contain any

STATUTES, REGULATIONS AND ANALYSIS

Congress has authorized the Commissioner to "revive an application if the delay is shown to the satisfaction of the Commissioner to have been "unavoidable." 35 U.S.C. §133 (1994).[2]

The regulations at 37 C.F.R. §1.137(a) and (b) set forth the requirements for a petitioner to revive a previously unavoidably or unintentionally, respectively, abandoned application under this congressional grant of authority. The language of 35 U.S.C. §133 and 37 C.F.R. §1.137(a) is clear, unambiguous, and without qualification: the delay in tendering the reply to the outstanding Office action, as well as filing the first petition seeking revival, must have been unavoidable for the reply now to be accepted on petition.[3]

Delays in responding properly raise the question whether delays are unavoidable.[4] Where there is a question whether the delay was unavoidable, Petitioners must meet the burden of establishing

---

false, fictitious or fraudulent statement or entry, shall be subject to the penalties set forth under 18 U.S.C. 1001, and that violations of this paragraph may jeopardize the validity of the application or document, or the validity or enforceability of any patent, trademark registration, or certificate resulting therefrom; and

(2) To the best of the party's knowledge, information and belief, formed after an inquiry reasonable under the circumstances, that —

(i) The paper is not being presented for any improper purpose, such as to harass someone or to cause unnecessary delay or needless increase in the cost of prosecution before the Office;

(ii) The claims and other legal contentions therein are warranted by existing law or by a nonfrivolous argument for the extension, modification, or reversal of existing law or the establishment of new law;

(iii) The allegations and other factual contentions have evidentiary support or, if specifically so identified, are likely to have evidentiary support after a reasonable opportunity for further investigation or discovery; and

(iv) The denials of factual contentions are warranted on the evidence, or if specifically so identified, are reasonably based on a lack of information or belief.

(c) Violations of paragraph (b)(1) of this section by a practitioner or non-practitioner may jeopardize the validity of the application or document, or the validity or enforceability of any patent, trademark registration, or certificate resulting therefrom. Violations of any of paragraphs (b)(2)(i) through (iv) of this section are, after notice and reasonable opportunity to respond, subject to such sanctions as deemed appropriate by the Commissioner, or the Commissioner's designee, which may include, but are not limited to, any combination of —

(1) Holding certain facts to have been established;

(2) Returning papers;

(3) Precluding a party from filing a paper, or presenting or contesting an issue;

(4) Imposing a monetary sanction;

(5) Requiring a terminal disclaimer for the period of the delay; or

(6) Terminating the proceedings in the Patent and Trademark Office.

(d) Any practitioner violating the provisions of this section may also be subject to disciplinary action. See § 10.23(c)(15).

[Added 50 FR 5175, Feb. 6, 1985, effective Mar. 8, 1985; para. (a) revised, 58 FR 54494, Oct. 22, 1993, effective Nov. 22, 1993; paras. (a) & (b) revised, paras. (c) & (d) added, 62 FR 53131, Oct. 10, 1997, effective Dec. 1, 1997; para. (a) revised, 69 FR 56481, Sept. 21, 2004, effective Oct. 21, 2004]

[2] 35 U.S.C. §133 provides:

35 U.S.C. §133 Time for prosecuting application.

Upon failure of the applicant to prosecute the application within six months after any action therein, of which notice has been given or mailed to the applicant, or within such shorter time, not less than thirty days, as fixed by the Commissioner in such action, the application shall be regarded as abandoned by the parties thereto, unless it be shown to the satisfaction of the Commissioner that such delay was unavoidable.

[3] Therefore, by example, an unavoidable delay in the payment of the Filing Fee might occur if a reply is shipped by the US Postal Service, but due to catastrophic accident, the delivery is not made.

[4] See: *Changes to Patent Practice and Procedure*; *Final Rule Notice*, 62 *Fed. Reg.* at 53158-59 (October 10, 1997), 1203 *Off. Gaz. Pat. Office* at 86-87 (October 21, 1997).

that the delay was unavoidable within the meaning of 35 U.S.C. §133 and 37 C.F.R. §1.137(a).[5] And the Petitioner must be diligent in attending to the matter.[6] Failure to do so does not constitute the care required under Pratt, and so cannot satisfy the test for diligence and due care.

(By contrast, unintentional delays are those that do not satisfy the very strict statutory and regulatory requirements of unavoidable delay, and also, by definition, are not intentional.[7]))

Allegations as to Withdrawal
of the Holding of Abandonment

The courts have determined the construct for properly supporting a petition seeking withdrawal of a holding of abandonment.[8]

Further, the commentary at MPEP §711.03(c) provides:

* * *

> **A. Petition To Withdraw Holding of Abandonment Based on Failure To Receive Office Action**
>
> In *Delgar v. Schulyer*, 172 USPQ 513 (D.D.C. 1971), the court decided that the Office should mail a new Notice of Allowance in view of the evidence presented in support of the contention that the applicant's representative did not receive the original Notice of Allowance. Under the reasoning of *Delgar*, an allegation that an Office action was never received may be considered in a petition to withdraw the holding of abandonment. If adequately supported, the Office may grant the petition to withdraw the holding of abandonment and remail the Office action. That is, the reasoning of *Delgar* is applicable regardless of whether an application is held abandoned for failure to timely pay the issue fee (35 U.S.C. 151) or for failure to prosecute (35 U.S.C. 133). To minimize costs and burdens to practitioners and the Office, the Office has modified the showing required to establish nonreceipt of an Office action. The showing required to establish nonreceipt of an Office communication must include a statement from the

---

[5] See: In re Application of G, 11 USPQ2d 1378, 1380 (Comm'r Pats. 1989).

[6] See: Diligence in Filing Petitions to Revive and Petitions to Withdraw the Holding of Abandonment, 1124 Off. Gaz. Pat. Office 33 (March 19, 1991). It was and is Petitioner's burden to exercise diligence in seeking either to have the holding of abandonment withdrawn or the application revived. See 1124 Off. Gaz. Pat. Office supra.

[7] Therefore, by example, an unintentional delay in the reply might occur if the reply and transmittal form are to be prepared for shipment by the US Postal Service, but other pressing matters distract one's attention and the mail is not timely deposited for shipment.

[8] See: Delgar v. Schulyer, 172 USPQ 513 (D.D.C. 1971).

> practitioner stating that the Office communication was not received by the practitioner and attesting to the fact that a search of the file jacket and docket records indicates that the Office communication was not received. A copy of the docket record where the nonreceived Office communication would have been entered had it been received and docketed must be attached to and referenced in practitioner's statement. For example, if a three month period for reply was set in the nonreceived Office action, a copy of the docket report showing all replies docketed for a date three months from the mail date of the nonreceived Office action must be submitted as documentary proof of nonreceipt of the Office action.
>
> * **
>
> The showing outlined above may not be sufficient if there are circumstances that point to a conclusion that the Office action may have been lost after receipt rather than a conclusion that the Office action was lost in the mail (e.g., if the practitioner has a history of not receiving Office actions).
>
> Evidence of nonreceipt of an Office communication or action (e.g., Notice of Abandonment or an advisory action) other than that action to which reply was required to avoid abandonment would not warrant withdrawal of the holding of abandonment. Abandonment takes place by operation of law for failure to reply to an Office action or timely pay the issue fee, not by operation of the mailing of a Notice of Abandonment. See *Lorenz v. Finkl*, 333 F.2d 885, 889-90, 142 USPQ 26, 29-30 (CCPA 1964); *Krahn v. Commissioner*, 15 USPQ2d 1823, 1824 (E.D. Va 1990); *In re Application of Fischer*, 6 USPQ2d 1573, 1574 (Comm'r Pat. 1988). (Emphasis supplied.)
>
> * * *

And the regulation requires that relief be sought within two (2) months of the act complained of.

As of this writing Petitioner appears to have satisfied the showing and timing requirements described above.

CONCLUSION

Because Petitioner has satisfied the burdens set forth in Delgar v. Schulyer, the petition as considered under 37 C.F.R. §1.181 is **granted**.

While Petitioner has authorized the Issue/Publication Fees Due, the transmittal form has not been completed (including assignee information); accordingly, the instant application is

released to Technology Center 3700 to remail the Notice of Allowance/Allowability and Fees Due in due course. The TC is cautioned to ensure that the address is correct and visible in/on the envelope.

Telephone inquiries concerning this decision may be directed to the undersigned at (571) 272-3214.

John J. Gillon, Jr.
Senior Attorney
Office of Petitions

UNITED STATES PATENT AND TRADEMARK OFFICE

Commissioner for Patents
United States Patent and Trademark Office
P.O. Box 1450
Alexandria, VA 22313-1450
www.uspto.gov

JJGJR.: 02-07

Paper No: __

QUARLES & BRADY LLP
411 E. WISCONSIN AVENUE
SUITE 2040
MILWAUKEE WI 53202-4497

COPY MAILED

MAR 0 1 2007

OFFICE OF PETITIONS

In re Application of	:	
Jansen	:	DECISION
Application No.: 10/366,293	:	
Filing Date: 13 February, 2003	:	
Attorney Docket No. 490326.90077	:	

This is a decision issued by the Office *sui sponte* following the mailing of a Notice of Abandonment on 25 January, 2007, and this decision addresses that mailing as a consideration of the withdrawal of the holding of abandonment under 37 C.F.R.§1.181.

For the reasons set forth below the matter considered *sui sponte* as a petition under 37 C.F.R. §1.181 is **GRANTED**.

BACKGROUND

The record reflects that:

- Petitioner failed to reply timely and properly to the Notice of Allowance/Allowability and Fees Due mailed on 25 May, 2005, with reply due under a non-extendable deadline on or before 25 August, 2005;
- the instant application went abandoned after midnight 25 August, 2005;
- the Office mailed the Notice of Abandonment on 25 October, 2005;

- on 21 November, 2005, Petitioner filed the instant petitions, seeking withdrawal of the holding of abandonment, and averred non-receipt of the original Notice of Allowance/Allowability and Fees Due mailed on 21 December, 2004, but returned by the US Postal Service (USPS) to the Office undelivered on 10 January, 2005, and re-mailed on 25 May, 2005, and Petitioner averred a review of his office files/jacket/docketing records regarding the instant application and that such review did not evidence receipt of the Notice by his office or its presence in his files, nor did a review of matters due for reply on 25 August, 2005, evidence presence of the Notice;

- the Office granted the petition on 10 July, 2006, and directed the re-mailing of the Notice of Allowance and Allowability, which occurred on 7 September, 2006, but the Office failed to note that Petitioner apparently obtained online a copy of the earlier Notice and properly responded thereto–thus, the Office erroneously re-Noticed abandonment on 25 January, 2007, when, in fact, the properly reply already had been filed, and so the *sui sponte* consideration herein of the matter as a petition under 37 C.F.R. §1.181.[1]

---

[1] Out of an abundance of caution, Petitioners always are reminded that the filing of a petition under 37 C.F.R. §1.181 does not toll any periods that may be running any action by the Office and a petition seeking relief under the regulation must be filed within two (2) months of the act complained of (see: 37 C.F.R. §1.181(f)), and those registered to practice *and* all others who make representations before the Office are reminded to inquire into the underlying facts of representations made to the Office and support averments with the appropriate documentation–since all owe to the Office the continuing duty to disclose ut of an abundance of caution, Petitioners always are reminded that the filing of a petition under 37 C.F.R. §1.181 does not toll any periods that may be running any action by the Office and a petition seeking relief under the regulation must be filed within two (2) months of the act complained of (see: 37 C.F.R. §1.181(f)), and those registered to practice *and* all others who make representations before the Office are reminded to inquire into the underlying facts of representations made to the Office and support averments with the appropriate documentation–since all owe to the Office the continuing duty to disclose.

See supplement of 17 June, 1999. The Patent and Trademark Office is relying on petitioner's duty of candor and good faith and accepting a statement made by Petitioner. See Changes to Patent Practice and Procedure, 62 Fed. Reg. at 53160 and 53178, 1203 Off. Gaz. Pat. Office at 88 and 103 (responses to comments 64 and 109)(applicant obligated under 37 C.F.R. §10.18 to inquire into the underlying facts and circumstances when providing statements to the Patent and Trademark Office).

Specifically, the regulations at 37 C.F.R. §10.18 provide:

§ 10.18 Signature and certificate for correspondence filed in the Patent and Trademark Office.
(a) For all documents filed in the Office in patent, trademark, and other non-patent matters, except for correspondence that is required to be signed by the applicant or party, each piece of correspondence filed by a practitioner in the Patent and Trademark Office must bear a signature by such practitioner complying with the provisions of §1.4(d), §1.4(e), or § 2.193(c)(1) of this chapter.
(b) By presenting to the Office (whether by signing, filing, submitting, or later advocating) any paper, the party presenting such paper, whether a practitioner or non-practitioner, is certifying that—

(1) All statements made therein of the party's own knowledge are true, all statements made therein on information and belief are believed to be true, and all statements made therein are made with the knowledge that whoever, in any matter within the jurisdiction of the Patent and Trademark Office, knowingly and willfully falsifies, conceals, or covers up by any trick, scheme, or device a material fact, or makes any false, fictitious or fraudulent statements or representations, or makes or uses any false writing or document knowing the same to contain any false, fictitious or fraudulent statement or entry, shall be subject to the penalties set forth under 18 U.S.C. 1001, and that violations of this paragraph may jeopardize the validity of the application or document, or the validity or enforceability of any patent, trademark registration, or certificate resulting therefrom; and

(2) To the best of the party's knowledge, information and belief, formed after an inquiry reasonable under the circumstances, that —

(i) The paper is not being presented for any improper purpose, such as to harass someone or to cause unnecessary delay or needless increase in the cost of prosecution before the Office;

(ii) The claims and other legal contentions therein are warranted by existing law or by a nonfrivolous argument for the extension, modification, or reversal of existing law or the establishment of new law;

(iii) The allegations and other factual contentions have evidentiary support or, if specifically so identified, are likely to have evidentiary support after a reasonable opportunity for further investigation or discovery; and

(iv) The denials of factual contentions are warranted on the evidence, or if specifically so identified, are reasonably based on a lack of

STATUTES, REGULATIONS AND ANALYSIS

Congress has authorized the Commissioner to "revive an application if the delay is shown to the satisfaction of the Commissioner to have been "unavoidable." 35 U.S.C. §133 (1994).[2]

The regulations at 37 C.F.R. §1.137(a) and (b) set forth the requirements for a petitioner to revive a previously unavoidably or unintentionally, respectively, abandoned application under this congressional grant of authority. The language of 35 U.S.C. §133 and 37 C.F.R. §1.137(a) is clear, unambiguous, and without qualification: the delay in tendering the reply to the outstanding Office action, as well as filing the first petition seeking revival, must have been unavoidable for the reply now to be accepted on petition.[3]

Delays in responding properly raise the question whether delays are unavoidable.[4] Where there is a question whether the delay was unavoidable, Petitioners must meet the burden of establishing that the delay was unavoidable within the meaning of 35 U.S.C. §133 and 37 C.F.R. §1.137(a).[5] And the Petitioner must be diligent in attending to the matter.[6] Failure to do so does not constitute the care required under Pratt, and so cannot satisfy the test for diligence and due care.

---

information or belief.
(c) Violations of paragraph (b)(1) of this section by a practitioner or non-practitioner may jeopardize the validity of the application or document, or the validity or enforceability of any patent, trademark registration, or certificate resulting therefrom. Violations of any of paragraphs (b)(2)(i) through (iv) of this section are, after notice and reasonable opportunity to respond, subject to such sanctions as deemed appropriate by the Commissioner, or the Commissioner's designee, which may include, but are not limited to, any combination of —

(1) Holding certain facts to have been established;
(2) Returning papers;
(3) Precluding a party from filing a paper, or presenting or contesting an issue;
(4) Imposing a monetary sanction;
(5) Requiring a terminal disclaimer for the period of the delay; or
(6) Terminating the proceedings in the Patent and Trademark Office.

(d) Any practitioner violating the provisions of this section may also be subject to disciplinary action. See § 10.23(c)(15).
[Added 50 FR 5175, Feb. 6, 1985, effective Mar. 8, 1985; para. (a) revised, 58 FR 54494, Oct. 22, 1993, effective Nov. 22, 1993; paras. (a) & (b) revised, paras. (c) & (d) added, 62 FR 53131, Oct. 10, 1997, effective Dec. 1, 1997; para. (a) revised, 69 FR 56481, Sept. 21, 2004, effective Oct. 21, 2004]

[2] 35 U.S.C. §133 provides:
35 U.S.C. §133 Time for prosecuting application.
Upon failure of the applicant to prosecute the application within six months after any action therein, of which notice has been given or mailed to the applicant, or within such shorter time, not less than thirty days, as fixed by the Commissioner in such action, the application shall be regarded as abandoned by the parties thereto, unless it be shown to the satisfaction of the Commissioner that such delay was unavoidable.

[3] Therefore, by example, an unavoidable delay in the payment of the Filing Fee might occur if a reply is shipped by the US Postal Service, but due to catastrophic accident, the delivery is not made.

[4] See: *Changes to Patent Practice and Procedure*; *Final Rule Notice*, 62 *Fed. Reg.* at 53158-59 (October 10, 1997), 1203 *Off. Gaz. Pat. Office* at 86-87 (October 21, 1997).

[5] See: In re Application of G, 11 USPQ2d 1378, 1380 (Comm'r Pats. 1989).

[6] See: Diligence in Filing Petitions to Revive and Petitions to Withdraw the Holding of Abandonment, 1124 Off. Gaz. Pat. Office 33 (March 19, 1991). It was and is Petitioner's burden to exercise diligence in seeking either to have the holding of abandonment withdrawn or the application revived. See 1124 Off. Gaz. Pat. Office supra.

(By contrast, unintentional delays are those that do not satisfy the very strict statutory and regulatory requirements of unavoidable delay, and also, by definition, are not intentional.[7]))

Allegations as to Withdrawal
of the Holding of Abandonment

The courts have determined the construct for properly supporting a petition seeking withdrawal of a holding of abandonment.[8] See also the commentary at MPEP §711.03(c).[9]

As of this writing Petitioner appears to have satisfied the requirements described above.

---

[7] Therefore, by example, an unintentional delay in the reply might occur if the reply and transmittal form are to be prepared for shipment by the US Postal Service, but other pressing matters distract one's attention and the mail is not timely deposited for shipment.

[8] See: Delgar v. Schulyer, 172 USPQ 513 (D.D.C. 1971).

[9] The commentary at MPEP §711.03(c) provides:

* * *

A. Petition To Withdraw Holding of Abandonment Based on Failure To Receive Office Action

In *Delgar v. Schulyer*, 172 USPQ 513 (D.D.C. 1971), the court decided that the Office should mail a new Notice of Allowance in view of the evidence presented in support of the contention that the applicant's representative did not receive the original Notice of Allowance. Under the reasoning of *Delgar*, an allegation that an Office action was never received may be considered in a petition to withdraw the holding of abandonment. If adequately supported, the Office may grant the petition to withdraw the holding of abandonment and remail the Office action. That is, the reasoning of *Delgar* is applicable regardless of whether an application is held abandoned for failure to timely pay the issue fee (35 U.S.C. 151) or for failure to prosecute (35 U.S.C. 133). To minimize costs and burdens to practitioners and the Office, the Office has modified the showing required to establish nonreceipt of an Office action. The showing required to establish nonreceipt of an Office communication must include a statement from the practitioner stating that the Office communication was not received by the practitioner and attesting to the fact that a search of the file jacket and docket records indicates that the Office communication was not received. A copy of the docket record where the nonreceived Office communication would have been entered had it been received and docketed must be attached to and referenced in practitioner's statement. For example, if a three month period for reply was set in the nonreceived Office action, a copy of the docket report showing all replies docketed for a date three months from the mail date of the nonreceived Office action must be submitted as documentary proof of nonreceipt of the Office action. * **

The showing outlined above may not be sufficient if there are circumstances that point to a conclusion that the Office action may have been lost after receipt rather than a conclusion that the Office action was lost in the mail (e.g., if the practitioner has a history of not receiving Office actions).

Evidence of nonreceipt of an Office communication or action (e.g., Notice of Abandonment or an advisory action) other than that action to which reply was required to avoid abandonment would not warrant withdrawal of the holding of abandonment. Abandonment takes place by operation of law for failure to reply to an Office action or timely pay the issue fee, not by operation of the mailing of a Notice of Abandonment. See *Lorenz v. Finkl*, 333 F.2d 885, 889-90, 142 USPQ 26, 29-30 (CCPA 1964); *Krahn v. Commissioner*, 15 USPQ2d 1823, 1824 (E.D. Va 1990); *In re Application of Fischer*, 6 USPQ2d 1573, 1574 (Comm'r Pat. 1988). (Emphasis supplied.)

* * *

And the regulation requires that relief be sought within two (2) months of the act complained of.

CONCLUSION

Because Petitioner has satisfied the burdens set forth in Delgar v. Schulyer, the petition as considered under 37 C.F.R. §1.181 is **granted**, and the 25 January, 2007, Notice of Abandonment hereby is **vacated**.

The instant application is released to Publications Branch to be processed into a patent.

Telephone inquiries concerning this decision may be directed to the undersigned at (571) 272-3214.

John J. Gillon, Jr.
Senior Attorney
Office of Petitions

SPE RESPONSE FOR CERTIFICATE OF CORRECTION 10/366,311

Paper No.: _____

DATE : 2/3/05

TO SPE OF : ART UNIT 1712

SUBJECT : Request for Certificate of Correction on Patent No.: 6780918

A response is requested with respect to the accompanying request for a certificate of correction.

Please complete this form and return with file, within **7** days to:
Certificates of Correction Branch - PK 3-915
Palm location **7580** - Tel. No. 305-8309

With respect to the change(s) requested, correcting Office and/or Applicant's errors, should the patent read as shown in the certificate of correction? No new matter should be introduced, nor should the scope or meaning of the claims be changed.

Lamonte Newsome

Thank You For Your Assistance

Certificates of Correction Branch

The request for issuing the above-identified correction(s) is hereby:
Note your decision on the appropriate box.

- ☑ **Approved** — All changes apply.
- ☐ **Approved in Part** — Specify below which changes **do not** apply.
- ☐ **Denied** — State the reasons for denial below.

Comments:

The certificate of correction filed November 16, 2004 merely implements grammatical corrections and is therefore acceptable.

RANDY GULAKOWSKI
SUPERVISORY PATENT EXAMINER
TECHNOLOGY CENTER 1700

SPE

1712
Art Unit

UNITED STATES PATENT AND TRADEMARK OFFICE

Commissioner for Patents
United States Patent and Trademark Office
P.O. Box 1450
Alexandria, VA 22313-1450
www.uspto.gov

In re Patent No. 6848231
Issue Date: February 1,2005
Application No. 10366332
Filed: February 14,2003
Attorney Docket No. P07856US00/RFH (REC-3693)

:DECISION GRANTING PETITION
:UNDER 37 CFR 1.378(c)

This is a decision on the electronic petition, filed February 19,2010 ,under 37 CFR 1.378(c) to accept the unintentionally delayed payment of the 3.5 year maintenance fee for the above-identified patent.

The petition is **GRANTED**.

The maintenance fee is accepted, and the above-identified patent reinstated as of February 19,2010 . This decision also constitutes notice that the fee has been accepted. An electronic copy of the petition and this decision has been created as an entry in the Image File Wrapper. Nevertheless, petitioner should print and retain an independent copy.

Telephone inquiries related to this electronic decision should be directed to the Electronic Business Center at 1-866-217-9197.

PTO/SB/66 (03-09)
Approved for use through 03/31/2012. OMB 0651-0016
U.S. Patent and Trademark Office: U.S. DEPARTMENT OF COMMERCE
Under the Paperwork Reduction Act of 1995, no persons are required to respond to a collection of information unless it displays valid OMB control number.

PETITION TO ACCEPT UNINTENTIONALLY DELAYED PAYMENT OF MAINTENANCE FEE IN AN EXPIRED PATENT (37 CFR 1.378(c))

Patent Number	Issue Date (YYYY-MM-DD)	Application Number	Filing Date (YYYY-MM-DD)	Docket Number (if applicable)
6,848,231	2005-02-01	10/366,332	2003-02-14	P7856US00/DEJ

CAUTION: Maintenance fee (and surcharge, if any) payment must correctly identify: (1) the patent number and (2) the application number of the actual U.S. application leading to issuance of that patent to ensure the fee(s) is/are associated with the correct patent. 37 CFR 1.366(c) and (d).

SMALL ENTITY

☐ Patentee claims, or has previously claimed, small entity status. See 37 CFR 1.27.

LOSS OF ENTITLEMENT TO SMALL ENTITY STATUS

☐ Patentee is no longer entitled to small entity status. See 37 CFR 1.27(g)

NOT Small Entity			Small Entity		
	Fee	Code		Fee	Code
◉	3 ½ year	(1551)	○	3 ½ year	(2551)
○	7 ½ year	(1552)	○	7 ½ year	(2552)
○	11 ½ year	(1553)	○	11 ½ year	(2553)

SURCHARGE

The surcharge required by 37 CFR 1.20(i)(2) (Fee Code 1558) must be paid as a condition of accepting unintentionally delayed payment of the maintenance fee.

MAINTENANCE FEE (37 CFR 1.20(e)-(g))

The appropriate maintenance fee must be submitted with this petition.

STATEMENT

THE UNDERSIGNED CERTIFIES THAT THE DELAY IN PAYMENT OF THE MAINTENANCE FEE TO THIS PATENT WAS UNINTENTIONAL

PETITIONER(S) REQUEST THAT THE DELAYED PAYMENT OF THE MAINTENANCE FEE BE ACCEPTED AND THE PATENT REINSTATED

THIS PORTION MUST BE COMPLETED BY THE SIGNATORY OR SIGNATORIES

37 CFR 1.378(d) states: "Any petition under this section must be signed by an attorney or agent registered to practice before the Patent and Trademark Office, or by the patentee, the assignee, or other party in interest."

I certify, in accordance with 37 CFR 1.4(d)(4) that I am

◉ An attorney or agent registered to practice before the Patent and Trademark Office

○ A sole patentee

○ A joint patentee; I certify that I am authorized to sign this submission on behalf of all the other patentees.

○ A joint patentee; all of whom are signing this e-petition

○ The assignee of record of the entire interest

Patent Practitioner			
A signature of the applicant or representative is required in accordance with 37 CFR 1.33 and 10.18. Please see 37 CFR 1.4(d) for the form of the signature			
Signature	/Douglas E. Jackson/	Date (YYYY-MM-DD)	2010-02-19
Name	Douglas E. Jackson	Registration Number	28518

This collection of information is required by 37 CFR 1.378(c). The information is required to obtain or retain a benefit by the public which is to file (and by the USPTO to process) an application. Confidentiality is governed by 35 U.S.C. 122 and 37 CFR 1.11 and 1.14. This collection is estimated to take 1 hour to complete, including gathering, preparing, and submitting the completed application form to the USPTO. Time will vary depending upon the individual case. Any comments on the amount of time you require to complete this form and/ or suggestions for reducing this burden, should be sent to the Chief Information Officer, U.S. Patent and Trademark Office, U.S. Department of Commerce, P.O. Box 1450, Alexandria, VA 22313-1450. DO NOT SEND FEES OR COMPLETED FORMS TO THIS ADDRESS. **This form can only be used when in conjunction with EFS-Web. If this form is mailed to the USPTO, it may cause delays in reinstating the patent.**

Privacy Act Statement

The Privacy Act of 1974 (P.L. 93-579) requires that you be given certain information in connection with your submission of the attached form related to a patent application or patent. Accordingly, pursuant to the requirements of the Act, please be advised that: (1) the general authority for the collection of this information is 35 U.S.C. 2(b)(2); (2) furnishing of the information solicited is voluntary; and (3) the principal purpose for which the information is used by the U.S. Patent and Trademark Office is to process and/or examine your submission related to a patent application or patent. If you do not furnish the requested information, the U.S. Patent and Trademark Office may not be able to process and/or examine your submission, which may result in termination of proceedings or abandonment of the application or expiration of the patent.

The information provided by you in this form will be subject to the following routine uses:

1. The information on this form will be treated confidentially to the extent allowed under the Freedom of Information Act (5 U.S.C. 552) and the Privacy Act (5 U.S.C. 552a). Records from this system of records may be disclosed to the Department of Justice to determine whether the Freedom of Information Act requires disclosure of these records.

2. A record from this system of records may be disclosed, as a routine use, in the course of presenting evidence to a court, magistrate, or administrative tribunal, including disclosures to opposing counsel in the course of settlement negotiations.

3. A record in this system of records may be disclosed, as a routine use, to a Member of Congress submitting a request involving an individual, to whom the record pertains, when the individual has requested assistance from the Member with respect to the subject matter of the record.

4. A record in this system of records may be disclosed, as a routine use, to a contractor of the Agency having need for the information in order to perform a contract. Recipients of information shall be required to comply with the requirements of the Privacy Act of 1974, as amended, pursuant to 5 U.S.C. 552a(m).

5. A record related to an International Application filed under the Patent Cooperation Treaty in this system of records may be disclosed, as a routine use, to the International Bureau of the World Intellectual Property Organization, pursuant to the Patent Cooperation Treaty.

6. A record in this system of records may be disclosed, as a routine use, to another federal agency for purposes of National Security review (35 U.S.C. 181) and for review pursuant to the Atomic Energy Act (42 U.S.C. 218(c)).

7. A record from this system of records may be disclosed, as a routine use, to the Administrator, General Services, or his/her designee, during an inspection of records conducted by GSA as part of that agency's responsibility to recommend improvements in records management practices and programs, under authority of 44 U.S.C. 2904 and 2906. Such disclosure shall be made in accordance with the GSA regulations governing inspection of records for this purpose, and any other relevant (i.e., GSA or Commerce) directive. Such disclosure shall not be used to make determinations about individuals.

8. A record from this system of records may be disclosed, as a routine use, to the public after either publication of the application pursuant to 35 U.S.C. 122(b) or issuance of a patent pursuant to 35 U.S.C. 151. Further, a record may be disclosed, subject to the limitations of 37 CFR 1.14, as a routine use, to the public if the record was filed in an application which became abandoned or in which the proceedings were terminated and which application is referenced by either a published application, an application open to public inspections or an issued patent.

9. A record from this system of records may be disclosed, as a routine use, to a Federal, State, or local law enforcement agency, if the USPTO becomes aware of a violation or potential violation of law or regulation.

UNITED STATES PATENT AND TRADEMARK OFFICE

Commissioner for Patents
United States Patent and Trademark Office
P.O. Box 1450
Alexandria, VA 22313-1450
www.uspto.gov

ANN TSAI
931 WEST 75TH STREET
SUITE 137 PMB 174
NAPERVILLE, IL 60565

MAILED

DEC 28 2004

Director's Office
Group 3700

In re application of Dung-Mau Wang	: : :	**NOTICE OF WITHDRAWAL FROM ISSUE UNDER 37 CFR. 1.313**
Serial Number: 10/366333 Filed: February 14, 2003	: :	

For: **RADIATOR**

The above-identified application is withdrawn from issue after payment of the issue fee to correct informality of filed oath.

The above-identified applicant is hereby withdrawn from issue.

The issue fee is refundable upon written request. If, however, the application is again found allowable, the issue fee can be applied toward payment of the issue fee in the amount identified on the new Notice of Allowance and Issue Fee Due upon written request. This request and any balance due must be received on or before the due date noted in the new Notice of Allowance in order to prevent abandonment of the applicant.

Telephone inquiries should be directed to Dave Scherbel at (571) 272-4919.

The above-identified application is being forwarded to the examiner for prompt appropriate action, including notifying applicant of the new status of this application.

Richard A. Bertsch

Richard A. Bertsch, Director
Technology Center 3700
(571) 272-3750

rt/ 12/23/04

UNITED STATES PATENT AND TRADEMARK OFFICE

Commissioner for Patents
United States Patent and Trademark Office
P.O. Box 1450
Alexandria, VA 22313-1450
www.uspto.gov

MAIL

DEC - 9 2004

DIRECTOR OFFICE
TECHNOLOGY CENTER 2100

MATTINGLY, STANGER, & MALUR, P.C.
1800 DIAGONAL ROAD
SUITE 370
ALEXANDRIA, VIRGINIA 22314

In re Application of: Nakatani, et al.
Application No. 10/366,361
Filed: February 14, 2003
For: UPDATED DATA WRITE METHOD USING JOURNAL LOG

DECISION ON PETITION TO MAKE SPECIAL (ACCELERATED EXAMINATION) UNDER M.P.E.P. §708.02 (VIII)

This is a response to the petition filed September 03, 2004, under 37 C.F.R. §1.102(d) and M.P.E.P. §708.02 (VIII): Accelerated Examination, to make the above-identified application special.

The Petition is **DISMISSED**.

M.P.E.P. §708.02, Section VIII which sets out the prerequisites for a grantable petition for Accelerated Examination under 37 C.F.R. §1.102(d) states in relevant part:

A new application (one which has not received any examination by the examiner) may be granted special status provided that applicant (and this term includes applicant's attorney or agent) complies with each of the following items:

(a) Submits a petition to make special accompanied by the fee set forth in **37 CFR 1.17(h)**;

(b) Presents all claims directed to a single invention, or if the Office determines that all the claims presented are not obviously directed to a single invention, will make an election without traverse as a prerequisite to the grant of special status;

(c) Submits a statement(s) that a pre-examination search was made, listing the field of search by class and subclass, publication, Chemical Abstracts, foreign patents, etc. The pre-examination search must be directed to the invention as claimed in the application for which special status is requested. A search made by a foreign patent office satisfies this requirement;

(d) Submits one copy each of the references deemed most closely related to the subject matter encompassed by the claims if said references are not already of record; and

(e) Submits a detailed discussion of the references, which discussion points out, with the particularity required by 37 CFR 1.111 (b) and (c), how the claimed subject matter is patentable over the references.

The petition filed September 03, 2004 fails to adequately meet requirement (e) of the criteria set forth above. With respect to requirement (e), all of the claims do not recite the particularly distinct features relied upon in applicant's arguments. Specifically, claims 1, 9, 10, and 17 do not recite the distinct feature of "separate buffer memory for storing updated data to be contained in the journal log". Also, none of the independent claims recite the distinct features of "using journal data for writing updates to a disk controller" or "wherein log data is used to update data in the storage system". Petitioner should ensure that the above discussion is directed to how the language of **each of the independent claims** are specifically distinguishable and patentable from the references provided in requirement (d) above.

Petition to Make Special **DISMISSED**.

Petitioner is given one opportunity to perfect the petition. Any request for reconsideration must be filed within TWO MONTHS of the mail date of this decision.

Until the renewed petition is submitted, the application will be returned to the examiner's docket to await treatment on the merits in the normal order of examination.

12/3/04

Brian L. Johnson
Special Program Examiner
Technology Center 2100
Computer Architecture, Software and Information Security
571-272-3595

MBS

UNITED STATES PATENT AND TRADEMARK OFFICE

Commissioner for Patents
United States Patent and Trademark Office
P.O. Box 1450
Alexandria, VA 22313-1450
www.uspto.gov

FLESHNER & KIM
P.O. BOX 221200
CHANTILLY, VA 20153

COPY MAILED

APR 27 2005

OFFICE OF PETITIONS

In re Patent No. 6,861,861	:	ON PETITION
Issue Date: March 1, 2005	:	
Application No. 10/366,368	:	
Filed: February 14, 2003	:	
Attorney Docket No. K-0469	:	

This is a decision on the petition under 37 CFR 1.183, filed March 18, 2005, which is being treated as a petition under 37 CFR 3.81(b)[1] to accept the correction of the assignee on the front page of the above-identified patent.

The petition is **dismissed**.

Petitioner requests issuance of a certificate of correction in the name of "Mirae Corporation, Seoul (KR) References Cited." However, Office PALM computer database assignment records reflect that the city name of the assignee sought by the certificate of correction was recorded as **Chungchongnam-do**. Accordingly, if reconsideration of this decision is requested, petitioner must supply either the reel and frame number where the recorded assignment appears or supply a copy of the recorded assignment. If the assignment was not recorded, or submitted for recordation, prior to issuance of this patent, a certificate of correction would not be in order. Note MPEP Section 307.

However, it would be appropriate to grant the instant petition to reflect the assignee name as Mirae Corporation, Chungchongnam-do, KOREA, on the front page of the Letters Patent. Accordingly, if petitioner desires to have the assignee data corrected on the front page of the Letters Patent, petitioner should submit a request for reconsideration under 37 CFR 1.183, along with a request for a Certificate of Correction and PTO Form 1050.

Further correspondence with respect to this matter should be addressed as follows:

---

[1] *See* Official Gazette of June 22, 2004

By mail: Mail Stop PETITIONS
Commissioner for Patents
Post Office Box 1450
Alexandria, VA 22313-1450

By hand: Customer Service Window
Randolph Building
401 Dulany Street
Alexandria, VA 22314

By fax: (703) 872-9306
ATTN: Office of Petitions

Telephone inquiries should be directed to Wan Laymon at (571) 272-3220.

Wan Laymon

Wan Laymon
Petitions Examiner
Office of Petitions
Office of the Deputy Commissioner
for Patent Examination Policy

UNITED STATES PATENT AND TRADEMARK OFFICE

Commissioner for Patents
United States Patent and Trademark Office
P.O. Box 1450
Alexandria, VA 22313-1450
www.uspto.gov

SUSAN P. PETRAGLIA
NO. 303
116 SIXTH STREET, NE
WASHINGTON, DC 20002

COPY MAILED

FEB 14 2005

OFFICE OF PETITIONS

In re Application of	:	
Chul-Hwan Kim et al	:	DECISION DISMISSING
Application No. 10/366,369	:	PETITION UNDER
Filed: February 14, 2003	:	37 CFR 1.55(c)
Attorney Docket No. DPI-01-006US	:	

This is a decision on the petition under 37 CFR 1.55(c), filed December 8, 2004, for acceptance of an unintentionally delayed claim under 35 U.S.C. § 119(a)-(b) for benefit of the filing date of the following foreign application: Korea Application No. 10-2002-0008077, filed February 15, 2002.

A petition under 37 CFR 1.55(c) to accept an unintentionally delayed claim for priority requires:

(1) The nonprovisional application claiming the benefit of an earlier filing date must be filed on or after November 29, 2000;

(2) the claim submitted with the petition must identify the prior foreign application for which priority is claimed, as well as any foreign application for the same subject matter and having a filing date before that of the application for which priority is claimed, by the application number, country, and the filing date **and be included either in an oath or declaration (37 CFR 1.63(c)(2) or in an Application Data Sheet (37 CFR 1.76(b)(6)**;

(3) the surcharge of $1,330.00, as set forth in 37 CFR 1.17(t);

(4) a statement that the entire delay between the date the claim was due under 37 CFR 1.55(a)(1) and the date the claim was filed was unintentional. (The Commissioner may require additional information where there is a question whether the delay was unintentional.); and

(5) the above-identified nonprovisional application must be filed within 12 months of the filing date of the foreign application.

The above-identified pending nonprovisional application was filed on February 14, 2003, which is after November 29, 2000, and did not include a reference to the foreign application, for which benefit is now sought, within the later of four months from the actual filing date of the application or sixteen months from the filing date of the prior foreign applications. Therefore, since the claim for priority is submitted after the period specified in 37 CFR 1.55(a)(1)(i), this is an appropriate petition under the provisions of 37 CFR 1.55(c).

The petition under 37 CFR 1.55(c) to accept an unintentionally delayed claim for priority under 35 U.S.C. § 119(a) - (d) is **dismissed**. The petition lacks item (2).

As to item (2), the declaration filed February 14, 2003 and supplemented on May 22, 2003 fails to indicate that priority was claimed. Unless provided in an application data sheet, 37 CFR 1.63 requires that the oath or declaration must identify the foreign application for patent or inventor's certificate for which priority is claimed under 37 CFR 1.55, and any foreign applications having a filing date before that of the application on which priority is claimed, by specifying the application number, country, day, month, and year of its filing. *Note* MPEP 201.14, page 200-77 (Rev. 2, Feb. 2004), last paragraph, second column.

In view of the above, compliance with 37 CFR 1.63 must be satisfied if applicants desire to claim priority to the foreign application noted in the petition. Any future petition should include a cover letter and be entitled "Renewed Petition under 37 CFR 1.55(c)" and should be submitted within two months from the mail date of this decision. *Note* 37 CFR 1.181(f).

Further correspondence with respect to this matter should be addressed as follows:

By mail: Mail Stop PETITIONS
Commissioner for Patents
Post Office Box 1450
Alexandria, VA 22313-1450

By hand: Customer Service Window
Randolph Building
401 Dulany Street
Alexandria, VA 22314

By fax: (703) 872-9306
ATTN: Office of Petitions

Any inquiries pertaining to this matter may be directed to Wan Laymon at (571) 272-3220.

Frances Hicks

Frances Hicks
Lead Petitions Examiner
Office of Petitions
Office of the Deputy Commissioner
for Patent Examination Policy

UNITED STATES PATENT AND TRADEMARK OFFICE

Commissioner for Patents
United States Patent and Trademark Office
P.O. Box 1450
Alexandria, VA 22313-1450
www.uspto.gov

SUSAN P. PETRAGLIA
NO. 303
116 SIXTH STREET, NE
WASHINGTON, DC 20002

COPY MAILED

MAY 11 2005

OFFICE OF PETITIONS

In re Application of
Chul-Hwan Kim et al
Application No. 10/368,369
Filed: February 14, 2003
Attorney Docket No. DPI-01-006US

DECISION GRANTING PETITION UNDER 37 CFR 1.55(c)

This is a decision on the renewed petition under 37 CFR 1.55(c), filed April 13, 2005, for acceptance of an unintentionally delayed claim under 35 U.S.C. § 119(a)-(d) for benefit of the filing date of foreign Korea Application No. 10-2002-0008077, filed February 15, 2002.

A petition under 37 CFR 1.55(c) to accept an unintentionally delayed claim for priority requires:

(1) The nonprovisional application claiming the benefit of an earlier filing date must be filed on or after November 29, 2000;

(2) the claim submitted with the petition must identify the prior foreign application for which priority is claimed, as well as any foreign application for the same subject matter and having a filing date before that of the application for which priority is claimed, by the application number, country, and the filing date **and be included either in an oath or declaration (37 CFR 1.63(c)(2)) or in an Application Data Sheet (37 CFR 1.76(b)(6);**

(3) the surcharge as set forth in 37 CFR 1.17(t);

(4) a statement that the entire delay between the date the claim was due under 37 CFR 1.55(a)(1) and the date the claim was filed was unintentional. (The Commissioner may require additional information where there is a question whether the delay was unintentional); and

(5) the above-identified nonprovisional application must be filed within 12 months of the filing date of the foreign application.

The instant pending nonprovisional application was filed after November 29, 2000, and did not include a reference to the foreign application, for which benefit is now sought, within the later of

four months from the actual filing date of the application or sixteen months from the filing date of the prior foreign application. Therefore, since the claim for priority is submitted after the period specified in 37 CFR 1.55(a)(1)(i), this is an appropriate petition under the provisions of 37 CFR 1.55(c).

The above-identified pending nonprovisional application was filed on February 14, 2003, which is after November 29, 2000 and within 12 months of February 15, 2002. On April 13, 2005, an executed oath/declaration was received which identifies the foreign application for which priority is claimed by application number, country and filing date. The required petition fee of $1,370 was received on December 8, 2004. Lastly, petitioner has provided an adequate statement of unintentional delay.

All requirements being met, the petition under 37 CFR 1.55(c) to accept an unintentionally delayed claim for priority under 35 U.S.C. § 119(a)-(d) is **granted**.

A Corrected Filing Receipt which reflects the above-noted foreign application accompanies this decision on petition.

This application is being forwarded to Technology Center AU 1756 for consideration by the examiner of record of the foreign priority claim under 35 U.S.C. § 119(a)-(d).

Any inquiries directly pertaining to this matter may be directed to Wan Laymon at (571) 272-3220.

Frances Hicks

Frances Hicks
Lead Petitions Examiner
Office of Petitions
Office of the Deputy Commissioner
for Patent Examination Policy

ATTACHMENT: Corrected Filing Receipt

UNITED STATES PATENT AND TRADEMARK OFFICE

UNITED STATES DEPARTMENT OF COMMERCE
United States Patent and Trademark Office
Address: COMMISSIONER FOR PATENTS
P.O. Box 1450
Alexandria, Virginia 22313-1450
www.uspto.gov

IBM CORPORATION
INTELLECTUAL PROPERTY LAW
11501 BURNET ROAD
AUSTIN, TX 78758

Mail Date: 04/20/2010

Applicant	: Joachim Gerhard Clabes	: DECISION ON REQUEST FOR
Patent Number	: 7657772	: RECALCULATION of PATENT
Issue Date	: 02/02/2010	: TERM ADJUSTMENT IN VIEW
Appliction No	: 10/366,437	: OF WYETH AND NOTICE OF INTENT TO
Filed	: 02/13/2003	: ISSUE CERTIFICATE OF CORRECTION
		:

The Request for Recalculation is **GRANTED** to the extent indicated.

The patent term adjustment has been determined to be **1697** days. The USPTO will *sua sponte* issue a certificate of correction reflecting the amount of PTA days determined by the recalculation.

Prior to the issuance of the certificate of correction, the USPTO will afford patentee an opportunity to be heard and request reconsideration. Accordingly, patentee has **one month or thirty (30) days**, whichever is longer, to file a request for reconsideration of this patent term adjustment calculation. See 35 U.S.C. 154(b)(3)(B)(ii) and 37 CFR 1.322(a)(4). No extensions of time will be granted under 37 CFR 1.136.

Patentee should use document code PET.OP if electronically filing a request for reconsideration of this patent term adjustment calculation. The patentee must also include the information required by 37 CFR 1.705(b)(2) and the fee required by 37 CFR 1.18(e). If patentee does not file a timely request for reconsideration of this patent term adjustment calculation including the information required by 37 CFR 1.705(b)(2) and the fee required by 37 CFR 1.18(e), the USPTO will issue a certificate of correction reflecting the PTA determination noted above.

Patentee should be aware that in order to preserve the right to review in the United States District Court for the District of Columbia of the USPTO patent term adjustment determination, patentee must ensure that he or she also take the steps required under 35 U.S.C. 154(b)(4)(A) in a timely manner. Nothing in the request for recalculation should be construed as providing an alternative time frame for commencing a civil action under 35 U.S.C. 154(b)(4)(A).

Any questions concerning this decision should be directed to the Office of Patent Legal Administration at 571-272-7702.

UNITED STATES PATENT AND TRADEMARK OFFICE

COMMISSIONER FOR PATENTS
UNITED STATES PATENT AND TRADEMARK OFFICE
P.O. BOX 1450
ALEXANDRIA, VA 22313-1450
www.uspto.gov

E. Joseph Gess, Esq.
BURNS, DOANE, SWECKER & MATHIS, L.L.P.
P.O. Box 1404
Alexandria VA 22313-1404

COPY MAILED

APR 2 9 2004

OFFICE OF PETITIONS

Applicant: Armand et al.
Appl. No.: 10/366,450
Filing Date: February 14, 2003
Title: IONIC COMPOUNDS WITH DELOCALIZED ANIONIC CHARGE, AND THEIR USE AS ION CONDUCTING COMPONENTS OR AS CATALYSTS
Attorney Docket No.: 032013-046
Pub. No.: US 2003/0195269 A1
Pub. Date: October 16, 2003

This is a decision on the request for corrected patent application publication under 37 CFR 1.221(b), filed on December 15, 2003 for the above-identified application.

The request is granted.

The corrected patent application publication will be published in due course.

Inquires concerning this communication should be directed to Mark Polutta at (703) 308-8122 (voice) or (703) 746-3465 (facsimile).

Mark O. Polutta
Office of Patent Legal Administration
Office of the Deputy Commissioner
for Patent Examination Policy

UNITED STATES PATENT AND TRADEMARK OFFICE

Commissioner for Patents
United States Patent and Trademark Office
P.O. Box 1450
Alexandria, VA 22313-1450
www.uspto.gov

Wilson Sonsini Goodrich & Rosati
650 Page Mill Road
Palo Alto, CA 94304-1050

COPY MAILED

SEP 12 2006

OFFICE OF PETITIONS

In re Application of :

Michael W. Pantoliano et al. :
Application No. 10/366,451 :
Filed: February 14, 2003 :
Attorney Docket No. 30923-704.401 :

DECISION ON PETITION
TO WITHDRAW
FROM RECORD

This is a decision on the Request to Withdraw as attorney or agent of record under 37 C.F.R. § 1.36(b), filed May 18, 2006.

The request is **APPROVED**.

A grantable request to withdraw as attorney/agent of record must be signed by every attorney/agent seeking to withdraw or contain a clear indication that one attorney is signing on behalf of another/others. A request to withdraw will not be approved unless at least 30 (thirty) days would remain between the date of approval and the later of the expiration date of a time to file a response or the expiration date of the maximum time period which can be extended under 37 C.F.R. § 1.136(a).

The request was signed by Vikki G. Norton on behalf of all attorneys of record who are associated with Customer No. 021971.

All attorneys/agents associated with the Customer No. 021971 have been withdrawn.

Applicant is reminded that there is no attorney of record at this time.

The request to change the correspondence of record is not acceptable as the requested correspondence address is not that of: (1) the first named signing inventor; or (2) an intervening assignee of the entire interest under 37 C.F.R 3.71. All future communications from the Office will be directed to the first named signing inventor of the entire interest at the first copied address below until otherwise properly notified by the applicant.

A change of correspondence address request signed by Samir Elamrani was filed May 19, 2006. The request is improper as Samir Elamrani is not an attorney or agent of record.

There is an outstanding Office action mailed July 28, 2006 that requires a reply from the applicant.

Telephone inquiries concerning this decision should be directed to Terri Williams at 571-272-2991.

David Bucci
Petitions Examiner
Office of Petitions

cc: **Michael W. Pantoliano**
570 Chandler Mill Road
Avondale, PA 19311

cc: **Johnson & Johnson Patent Law Dept.**
Johnson & Johnson Plaza
New Brunswick, NJ 08933-7003

DEC 09 2005
PATENT & TRADEMARK OFFICE

PTO/SB/83 (04-05)
Approved for use through 11/30/2005. OMB 0651-0035
U.S. Patent and Trademark Office; U.S. DEPARTMENT OF COMMERCE
Under the Paperwork Reduction Act of 1995, no persons are required to respond to a collection of information unless it contains a valid OMB control number.

REQUEST FOR WITHDRAWAL AS ATTORNEY OR AGENT AND CHANGE OF CORRESPONDENCE ADDRESS

Application Number	10/366,464
Filing Date	February 14, 2003
First Named Inventor	ARCHIBALD, William B.
Art Unit	1743
Examiner Name	GAKH, Yelena G.
Attorney Docket Number	38916-0005.US

To: Commissioner for Patents
P.O. Box 1450
Alexandria, VA 22313-1450

Approved
Jacqueline M. Stone
Jacqueline M. Stone, Director
Technology Center 1700
3/20/06

Please withdraw me as attorney or agent for the above identified patent application, and

☑ all the attorneys/agents of record.

☐ The attorneys/agents (with registration numbers) listed on the attached paper(s), or

☐ The attorneys/agents associated with Customer Number

NOTE: This box can only be checked when the power of attorney of record in the application is to all the practitioners associated with a customer number.

The reasons for this request are: Client has requested new counsel.

CORRESPONDENCE ADDRESS

1. ☐ The correspondence address is NOT affected by this withdrawal.

2. ☑ Change the correspondence address and direct all future correspondence to:

☐ Customer Number:

OR

☑ Firm *or* Individual Name	Marvin A. Motsenbocker, Novak Druce Deluca & Quigg LLP				
Address	1300 Eye Street NW				
Address	400 East Tower				
City	Washington	State	DC	ZIP	20005
Country	United States of America				
Telephone	202.659.0100	Fax	202.318.7811		

Name	Patricia D. Granados		
Signature	Patricia D. Granados	Registration No.	33,683
Date	December 9, 2005	Telephone	202.912.2000

NOTE: Withdrawal is effective when approved rather than when received. Unless there are at least 30 days between approval of withdrawal and the expiration date of a time period for response or possible extension period, the request to withdraw is normally disapproved.

This collection of information is required by 37 C.F.R. 1.36. The information is required to obtain or retain a benefit by the public which is to file (and by the USPTO to process) an application. Confidentiality is governed by 35 U.S.C. 122 and 37 C.F.R. 1.14. This collection is estimated to take 12 minutes to complete, including gathering, preparing, and submitting the completed application form to the USPTO. Time will vary depending upon the individual case. Any comments on the amount of time you require to complete this form and/or suggestions by reducing this burden, should be sent to the Chief Information Officer, U.S. Patent and Trademark Office, U.S. Department of Commerce, P.O. Box 1450, Alexandria, VA 22313-1450. DO NOT SEND FEES OR COMPLETED FORMS TO THIS ADDRESS. SEND TO: Commissioner for Patents, P.O. Box 1450, Alexandria, VA 22313-1450.

If you need assistance in completing the form, call 1-800-PTO-9199 and select option 2.

SPE RESPONSE FOR CERTIFICATE OF CORRECTION

Paper No.: _____

DATE : 2/12/09

TO SPE OF : ART UNIT 3636 (3600)

SUBJECT : Request for Certificate of Correction for Appl. No.: 10/366,495 Patent No.: 7,127,854
Attn: Peter Brown

Please respond to this request for a certificate of correction within 7 days.

FOR IFW FILES:

Please review the requested changes/corrections as shown in the **COCIN** document(s) in the IFW application image. No new matter should be introduced, nor should the scope or meaning of the claims be changed.

Please complete the response (see below) and forward the completed response to scanning using document code **COCX**.

FOR PAPER FILES:

Please review the requested changes/corrections as shown in the attached certificate of correction. Please complete this form (see below) and forward it with the file to:

Certificates of Correction Branch (C of C)
South Tower - 9A22
Palm Location 7580

*ATTN: Ok to replace drawing figure 1 as requested in COCIN?

Ernest C. White, LIE
Certificates of Correction Branch
703-308-9390 ext.122

Thank You For Your Assistance

The request for issuing the above-identified correction(s) is hereby:
Note your decision on the appropriate box.

- [x] **Approved** — **All** changes apply.
- [ ] **Approved in Part** — Specify below which changes **do not** apply.
- [ ] **Denied** — State the reasons for denial below.

Comments: _____

_____

_____

_____

SPE — 3636 Art Unit

UNITED STATES PATENT AND TRADEMARK OFFICE

COMMISSIONER FOR PATENTS
UNITED STATES PATENT AND TRADEMARK OFFICE
P.O. BOX 1450
ALEXANDRIA, VA 22313-1450
www.uspto.gov

Michael E. Fogarty
McDermott Will & Emery
600 13th Street, NW
Washington, DC 20005-3096

MAILED

OCT 13 2005

REEXAM UNIT

In re Reissue
Application No. 10/366,502 : DECISION DISMISSING
Filed: February 13, 2003 : PETITION
For: United States Patent 6,237,084
Issued: May 22, 2001

On February 13, 2003, application number 10/266,502 was filed as an application for reissue of United States Patent No. 6,237,084.

On February 13, 2004, applicant filed a petition under 37 CFR 1.182 to waive the procedure discussed in MPEP § 1441, whereby a reissue application generally would not be acted on sooner than two (2) months after announcement of the filing of the reissue application appears in the Official Gazette of the United States Patent and Trademark Office. Applicant authorized the payment of the necessary petition fee as a charge against applicant's deposit account.

The record shows that the petition was inadvertently not recognized as a petition, and received no action. The petition fee was not charged. Following publication of the Notice of Filing Reissue Application in the Official Gazette on April 13, 2004, examination of the reissued application commenced. It now appears that a Notice of Allowance has been mailed.

Accordingly, the petition under 37 CFR 1.182 is dismissed as moot.

Telephone inquires related to this decision should be directed to Stephen Marcus, Legal Advisor, at (571) 272-7743.

Kenneth M. Schor
Senior Legal Advisor
Office of Patent Legal Administration

SPE RESPONSE FOR CERTIFICATE OF CORRECTION

Paper No.: _____

DATE : 5/1/07

TO SPE OF : ART UNIT 2183

SUBJECT : Request for Certificate of Correction on Patent No.: RE 39121

A response is requested with respect to the accompanying request for a certificate of correction.

Please complete this form and return with file, within 7 days to:
Palm location **7580, Certificates of Correction Branch – South Tower – 9A22**
If response is for an IFW, **return to employee (named below) via PUBSCofC Team in MADRAS.**
With respect to the change(s) requested, correcting Office and/or Applicant's errors, should the patent read as shown in the certificate of correction (COCIN)? No new matter should be introduced, nor should the scope or meaning of the claims be changed.

Valerie Jackson

Thank You For Your Assistance

Certificates of Correction Branch
Tel. No. 703-308-9390 ext. 114

The request for issuing the above-identified correction(s) is hereby:
Note your decision on the appropriate box.

- ☐ **Approved** — All changes apply.
- ☒ **Approved in Part** — Specify below which changes **do not** apply.
- ☐ **Denied** — State the reasons for denial below.

Comments:

The changes which do not apply are the insertion of US Patent 5,847,978 and insertion of Japanese document JP 9-97178.

Reason for denial: Applicant claims to have filed an IDS on April 25, 2003 and produces a postcard receipt to that effect. However, the patented case file contains no copy of said IDS nor any evidence that such IDS was ever filed. Furthermore, during prosecution, applicant could have utilized the interview of November 10, 2004, their response of March 15, 2005, or their response of May 23, 2005 to have informed the office of this omission. They did not do so and have instead waited nearly a full year after grant of patent (and close of prosecution) to bring this omission to the attention of the office. Accordingly, because applicant had sufficient opportunity to notify the office of the omitted IDS during prosecution, attempting to utilize Certificate of Correction practice to insert these two references at this time is improper.

/Eddie P. Chan/ SPE AU2183

SPE _____ Art Unit

UNITED STATES PATENT AND TRADEMARK OFFICE

Commissioner for Patents
United States Patent and Trademark Office
P.O. Box 1450
Alexandria, VA 22313-1450
www.uspto.gov

STAAS & HALSEY LLP
SUITE 700
1201 NEW YORK AVENUE, N.W.
WASHINGTON, DC 20005

COPY MAILED

MAR 08 2007

OFFICE OF PETITIONS

In re Application of :
Yasuyuki Watanabe :
Application No. 10/366,525 : ON PETITION
Filed: February 14, 2003 :
Attorney Docket No. 1076.1086

This is a decision on the petition, filed March 1, 2007 under 37 CFR 1.313(c)(2) to withdraw the above-identified application from issue after payment of the issue fee.

The petition is **GRANTED**.

The above-identified application is withdrawn from issue for consideration of a submission under 37 CFR 1.114 (request for continued examination). See 37 CFR 1.313(c)(2).

Petitioner is advised that the issue fee paid on February 14, 2007 in the above-identified application cannot be refunded. If, however, the above-identified application is again allowed, petitioner may request that it be applied towards the issue fee required by the new Notice of Allowance.[1]

Telephone inquiries should be directed to Irvin Dingle at (571) 272-3210.

This matter is being referred to Technology Center AU 2138 for processing of the request for continued examination under 37 CFR 1.114 and for consideration of the concurrently filed Information Disclosure Statement.

Irvin Dingle
Petitions Examiner
Office of Petitions

---

[1] The request to apply the issue fee to the new Notice may be satisfied by completing and returning the new Issue Fee Transmittal Form PTOL-85(b), which includes the following language thereon: Commissioner for Patents is requested to apply the Issue Fee and Publication Fee (if any) or re-apply any previously paid issue fee to the application identified above. Petitioner is advised that, whether a fee is indicated as being due or not, the Issue Fee Transmittal Form **must** be completed and timely submitted to avoid abandonment. Note the language in bold text on the first page of the Notice of Allowance and Fee(s) Due (PTOL-85).

UNITED STATES PATENT AND TRADEMARK OFFICE

Commissioner for Patents
United States Patent and Trademark Office
P.O. Box 1450
Alexandria, VA 22313-1450
www.uspto.gov

CANTOR COLBURN LLP
55 GRIFFIN ROAD SOUTH
BLOOMFIELD CT 06002

MAILED

JUN 0 8 2009

OFFICE OF PETITIONS

In re Patent No. 6,920,697	:	
Issue Date: July 26, 2005	:	
Application No. 10/366,536	:	NOTICE UNDER 37 CFR. 1.28(c)
Filed: February 13, 2003	:	
Attorney Docket No. FAO-0083	:	

This is a notice regarding your request for acceptance of a fee deficiency submission under 37 CFR 1.28. On September 01, 1998, the court of Appeals for the Federal Circuit held that 37 CFR 1.28(c) is the sole provision governing the time for correction of the erroneous payment of the issue fee as a small entity. **See DH Technology v. Synergystex International, Inc. 154 F.3d 1333, 47 USPQ2d 1865 (Fed. Cir. Sept. 1, 1998).**

The Office no longer investigates or rejects original or reissue applications under 37 CFR 1.56. **1098 Off. Gaz. Pat. Office 502 (January 3, 1989).** Therefore, nothing in this Notice is intended to imply that an investigation was done.

Your fee deficiency submission under 37 CFR 1.28 is hereby **ACCEPTED**.

This application is no longer entitled to small entity status. Accordingly, all future fees paid in this application must be paid at the large entity rate.

The file does not indicate a change of address has been submitted, although the address given on the petition differs from the address of record. If appropriate, a change of address should be filed in accordance with MPEP 601.03. A courtesy copy of this decision is being mailed to the address given on the petition; however, the Office will mail all future correspondence solely to the address of record.

Inquiries related to this communication should be directed to the Michelle R. Eason at (571) 272-4231.

Thurman Page
Petitions Examiner
Office of Petitions

cc: **CANTOR COLBURN LLP**
20 CHURCH STREET
22ND FLOOR
HARTFORD, CT 06103

NOTICE RE: CERTIFICATES OF CORRECTION

DATE : 5/10/05 Paper No.: _____

TO : Supervisor, Art Unit 2863

SUBJECT : Certificate of Correction Request in Patent No.: 10/366,540 6,862,534 B2

A response to the following question is requested with respect to the accompanying request for a certificate of correction.

With respect to the change(s) requested, correcting Office and/or Applicant's errors, should the patent read as shown in the certificate of correction? No new matter should be introduced, nor should the scope or meaning of the claims be changed.

PLEASE COMPLETE THIS FORM AND RETURN WITH FILE, WITHIN 7 DAYS, TO CERTIFICATES OF CORRECTION BRANCH - PK 3-915/922 PALM LOCATION 7580 - TEL. N0. 305-8309

THANK YOU FOR YOUR ASSISTANCE!

Note your decision by placing a check mark in the appropriate box below, indicating whether all changes requested in the Request for Certificate of Correction should be applied. Please specify which changes should not be applied and indicate the reason(s) for denial, in the "Comments" section below.

☒ YES ☐ NO

☒ Comments: Had the petition been reviewed prior to issuance, the change of inventorship would have been granted.

Supervisor
John Barlow
Supervisory Patent Examiner
Technology Center 2800

2863
Art Unit

UNITED STATES PATENT AND TRADEMARK OFFICE

COMMISSIONER FOR PATENTS
UNITED STATES PATENT AND TRADEMARK OFFICE
P.O. BOX 1450
ALEXANDRIA, VA 22313-1450
www.uspto.gov

MAILED

APR 19 2005

Technology Center 2100

MATTINGLY, STANGER, MALUR & BRUNDIDGE, P.C.
1800 DIAGONAL ROAD
SUITE 370
ALEXANDRIA VA 22314

In re Application of: Mikami, et al.
Application No. 10/366,557
Filed: February 14, 2003
For: DATA TRANSFER METHOD

DECISION ON PETITION
TO MAKE SPECIAL
(ACCELERATED EXAMINATION)
UNDER MPEP §708.02 (VIII)

This is a response to the petition filed 24 January 2005, under 37 CFR §1.102(d) and MPEP §708.02 (VIII): Accelerated Examination, to make the above-identified application special.

The Petition is **GRANTED**.

MPEP §708.02, Section VIII, which sets out the prerequisites for a grantable petition for Accelerated Examination under 37 C.F.R. §1.102(d), states in relevant part:

A new application (one which has not received any examination by the examiner) may be granted special status provided that applicant (and this term includes applicant's attorney or agent) complies with each of the following items:

(a) Submits a petition to make special accompanied by the fee set forth in **37 CFR 1.17(h)**;

(b) Presents all claims directed to a single invention, or if the Office determines that all the claims presented are not obviously directed to a single invention, will make an election without traverse as a prerequisite to the grant of special status;

(c) Submits a statement(s) that a pre-examination search was made, listing the field of search by class and subclass, publication, Chemical Abstracts, foreign patents, etc. The pre-examination search must be directed to the invention as claimed in the application for which special status is requested. A search made by a foreign patent office satisfies this requirement;

(d) Submits one copy each of the references deemed most closely related to the subject matter encompassed by the claims if said references are not already of record; and

(e) Submits a detailed discussion of the references, which discussion points out, with the particularity required by 37 CFR 1.111 (b) and (c), how the claimed subject matter is patentable over the references.

Applicant's submission meets all the criteria set out above. Accordingly, the petition is **GRANTED**.

The application file is being forwarded to the Examiner of Record for accelerated examination according to the procedures set forth in MPEP § 708.02, Section VIII.

Pinchus M. Laufer
Special Program Examiner
Technology Center 2100
Computer Architecture, Software and Information Security
571-272-3599

UNITED STATES PATENT AND TRADEMARK OFFICE

Commissioner for Patents
United States Patent and Trademark Office
P.O. Box 1450
Alexandria, VA 22313-1450
www.uspto.gov

MARK J. PANDISCIO
PANDISCIO & PANDISCIO, P.C.
470 TOTTEN POND ROAD
WALTHAM MA 02451

COPY MAILED

OCT 09 2007

OFFICE OF PETITIONS

In re Application of	:	
Yves BOREL et al.	:	
Application No. 10/366,569	:	DECISION ON PETITION
Filed: February 14, 2003	:	
Attorney Docket No. 06478.1449-01	:	

This is a decision on the petition under 37 CFR 1.137(b), filed September 14, 2007, to revive the above-identified application.

The petition is **GRANTED**.

The above-identified application became abandoned for failure to reply to the Notice of Allowance and Fee(s) Due ("Notice"), mailed March 13, 2007, which set a shortened statutory period for reply of three (3) months. Accordingly, the above-identified application became abandoned on June 14, 2007.

The petition satisfies the conditions for revival pursuant to the provisions of 37 CFR 1.137(b) in that (1) the reply in the form of an issue fee payment; (2) the petition fee of $1500; and (3) the required statement of unintentional delay have been received. Accordingly, the reply to the Notice of March 13, 2007 is accepted as having been unintentionally delayed.

Telephone inquiries concerning this decision should be directed to Brian Sines at (571) 272-6051 or in his absence, the undersigned at (571) 272-7099.

The application file is being referred to the Office of Publications.

David Bucci
Petitions Examiner
Office of Petitions

UNITED STATES PATENT AND TRADEMARK OFFICE

COMMISSIONER FOR PATENTS
UNITED STATES PATENT AND TRADEMARK OFFICE
P.O. BOX 1450
ALEXANDRIA, VA 22313-1450
www.uspto.gov

MAIL

MAY 2 6 2005

DIRECTOR OFFICE
TECHNOLOGY CENTER 2600

John V. Bianco
10 Laurel Road
North Reading, MA 01864-3011

In re Application of
Maeve Sarah Curley, et al.
Application No. 10/366,579
Filed: February 13, 2003
For: **REMOTE DISPLAY SYSTEM AND METHODS FOR NAVIGATIONAL APPLICATIONS**

DECISION ON PETITION
TO WITHDRAW HOLDING OF
ABANDONMENT

This is a decision on the petition filed May 9, 2005, which is treated as a Petition to Withdraw Holding of Abandonment pursuant to 37 C.F.R. §1.181. No fee is required.

This application is held abandoned for failure to timely file a response to the non-final Office action mailed August 25, 2004. A Notice of Abandonment has not yet been mailed.

Petitioner asserts that the non-final Office action was not received. Petitioner also states that a change of correspondence address was submitted on October 6, 2003.

The petition fails to comply with MPEP §711.03(c) for a successful petition to withdraw the holding of abandonment. Petitioner does not attest to a search of the file jacket or docket records and petitioner also failed to supply a copy of their docket record with explanation of said record.

A review of the application file reveals that Applicants change of correspondence address, filed October 6, 2003, was matched with the file prior to the mailing of the non-final Office action.

However, review of the application file also reveals that the non-final Office action was mailed to an incorrect address and was returned as undelivered on September 8, 2004. Therefore, there was an obvious irregularity in the mailing of the Office communication.

In view of the above stated reasons, it is apparent that Applicant did not receive the non-final Office action mailed August 25, 2004. Thus, the application was not abandoned in fact. Accordingly, the holding of abandonment is withdrawn.

The petition is **GRANTED**.

The application file is being forwarded to the TC 2600 technical support staff for processing the change the correspondence address and to re-mail the non-final Office action. The time period for response to the non-final Office action will be reset to run from the date of re-mailing.

Dwayne Bost
Special Program Examiner
Technology Center 2600
Communications

UNITED STATES PATENT AND TRADEMARK OFFICE

Commissioner for Patents
United States Patent and Trademark Office
P.O. Box 1450
Alexandria, VA 22313-1450
www.uspto.gov

SEP 1 5 2005

Hua-Ping Chen
P.O. Box 6-57
Chung-Ho
Taipei, 235
TAIWAN

In re Application of	:	
Hua-Ping Chen	:	DECISION ON PETITION
Application No. 10/366,622	:	TO WITHDRAW THE
Filed: February 14, 2003	:	HOLDING OF
For: ADVERTISEMENT BILLBOARD	:	ABANDONMENT

This is in response to applicant's petition to withdraw the holding of abandonment, filed in the United States Patent and Trademark Office (USPTO) on May 3, 2005.

The petition is **DISMISSED**.

A review of the file records reveals that the application was held abandoned for failure to timely file a reply to the non-final Office action mailed March 23, 2004. A Notice to that effect was mailed November 3, 2004.

Applicant states that the Office action mailed March 23, 2004 was not received.

There is a strong presumption that mail properly addressed and delivered to the United States Postal Service was in fact delivered to the addressee. An allegation that an Office communication was not received may be considered in a formal petition for the withdrawal of the holding of abandonment, in accordance with *Delgar Inc. v. Schuyler*, 172 USPQ 513. However, the presumption that the Office communication was delivered to applicant may be overcome by a showing that the communication was not, in fact, received as indicated below.

Since the application is pro se, statements of non-receipt should include a statement by the applicant, and by anyone else at applicant's correspondence address, who would have handled the Office communication, and include any available documentary evidence of mail received, covering a reasonable period after the date of the Office communication, to show non-receipt of the

communication in question. Copies of records on which the receipt date of the Office communication would have been entered had it been received, (*e.g.*, a copy of the outside of the file maintained by applicant), are required if available. Also, a showing of any docket records *or other method* which would serve as a reminder of a response due date should be submitted. Whatever method applicant uses as a reminder, and submits in response to this decision should be adequately explained. Also, a statement is required that a search of the file maintained by applicant, or any other location where correspondence from the USPTO is kept, failed to find a copy of the Office communication in question. Finally, applicant must state that he was in fact at the correspondence address of record at the time the Office action would have been received.

Any such exhibits should be submitted as part of statement(s) showing that no Office communication was ever received.

Applicant's petition of May 3, 2005 does not include any statement that the applicant was at the correspondence address at the time the office action would have been received. Also, no statement has been made by others (the "local agent" handling incoming mail, and anyone else at the correspondence address) that the Office Action was not received. Applicant's petition also does not include any showing of any method that serves as a reminder that a response is due.

Any request for reconsideration of this decision must be submitted within **TWO (2) MONTHS** from the mail date of this decision. Extensions of time under 37 CFR 1.136(a) are permitted. The reconsideration request should include a cover letter entitled "Renewed Petition Under 37 CFR 1.181" and should be mailed to the Commissioner for Patents, P.O. Box 1450, Technology Center 3600, Alexandria, VA 22313-1450.

Kenneth J. Dorner
Special Programs Examiner
Patent Technology Center 3600
(571) 272-6587

KJD/js: 8/15/05

UNITED STATES PATENT AND TRADEMARK OFFICE

Commissioner for Patents
United States Patent and Trademark Office
P.O. Box 1450
Alexandria, VA 22313-1450
www.uspto.gov

Hua-Ping Chen
P.O. Box No. 6-57
Chung-Ho
Taipei 235 TAIWAN AIRMAIL

COPY MAILED
DEC 14 2005
OFFICE OF PETITIONS

In re Application of	:	
Hua-Ping Chen	:	
Application No. 10/366,622	:	DECISION ON PETITION
Filed: February 14, 2003	:	
Title: Advertisement Billboard	:	

This is a decision on the renewed petition under 37 CFR 1.181, filed November 14, 2005, to withdraw the holding of abandonment.

The application became abandoned on June 24, 2004, for failure to reply to the nonfinal Office action mailed on March 23, 2004, which set a three-month shortened statutory period for reply. A Notice of Abandonment was mailed on November 3, 2004.

In the present petition, petitioner again asserted that his local agent, Vincent Lin, did not receive the nonfinal Office action of March 23, 2004.

PETITION TO WITHDRAW THE HOLDING OF ABANDONMENT

A review of the record indicates no irregularity in the mailing of the nonfinal Office action, and in the absence of any irregularity in the mailing, there is a strong presumption that the Office action was properly mailed to the address of record. This presumption may be overcome by a showing that the Office action was not in fact received. The showing required to establish non-receipt of an Office communication must include a statement from the practitioner stating that the practitioner did not receive the Office communication and attesting to the fact that a search of the file jacket and docket records indicates that the Office communication was not received. A copy of the docket record where the non-received Office communication would have been entered had it been received and docketed must be attached to and referenced in practitioner's statement. See M.P.E.P. § 711.03(c). For example, if a three-month period for reply was set in the non-received Office action, a copy of the docket report showing all replies docketed for a date three months from the mail date of the non-received Office action must be submitted as documentary proof of non-receipt of the Office action. The showing outlined above may not be sufficient if there are circumstances that point to a conclusion that the

Office action may have been lost after receipt rather than a conclusion that the Office action was lost in the mail (*e.g.* if the practitioner has a history of not receiving Office actions).

After reviewing the documents submitted on petition, the Office concludes that the showing of record is sufficient to warrant withdrawal of the holding of abandonment. Mr. Lin submitted a copy of the docket records (deadline control sheet) as printed out from the computer management system where the non-received nonfinal Office action would have been entered had it been received and docketed. Mr. Lin explained that the docket records (deadline control sheet) from the computer management system served as a reminder of a response due date. Additionally, Mr. Lin stated that he was at the correspondence address of record at the time the nonfinal Office action would have been received. Furthermore, Mr. Lin attested to the fact that a search of the file jacket and docket records indicated that he did not receive the nonfinal Office action. As petitioner has presented the required showing, the petition to withdraw the holding of abandonment is granted.

In view of the evidence presented in support of the contention that petitioner's local agent did not receive the original nonfinal Office action of March 23, 2004, **Technology Center Art Unit 3611 shall remail the nonfinal Office action and restart the period for response.**

This matter is being referred to Technology Center Art Unit 3611 for further action in accordance with the present decision.

Telephone inquiries related to this decision may be directed to the undersigned at (571) 272-3211.

Christina Tartera Donnell

Christina Tartera Donnell
Senior Petitions Attorney
Office of Petitions

UNITED STATES PATENT AND TRADEMARK OFFICE

COMMISSIONER FOR PATENTS
UNITED STATES PATENT AND TRADEMARK OFFICE
P.O. BOX 1450
ALEXANDRIA, VA 22313-1450
WWW.USPTO.GOV

Paper No. 9

MERCHANT & GOULD PC
P.O. BOX 2903
MINNEAPOLIS MN 55402-0903

COPY MAILED

AUG 21 2003

OFFICE OF PETITIONS

In re Application of
Dusan Ninkov
Application No. 10/366,634
Filed: February 12, 2003
Attorney Docket No. 12996.9USU1

: DECISION REFUSING
: STATUS UNDER
: 37 CFR 1.47(b)

This is in response to the petition under 37 CFR 1.47(b), filed July 28, 2003 (certificate of mailing date July 23, 2003).

The petition is dismissed.

Any request for reconsideration of this decision must be submitted within TWO (2) MONTHS from the mail date of this decision. Extensions of time under 37 CFR 1.136(a) are permitted. Any response should be entitled "Request for Reconsideration of Petition Under 37 CFR 1.47(b)" and may include an oath or declaration executed by the inventor. **Failure to respond will result in abandonment of the application.**

The above-identified application was filed on February 12, 2003 without an executed oath or declaration. On April 24, 2003, a "Notice to File Missing Parts of Nonprovisional Application" was mailed, requiring an executed oath or declaration, filing fees, a surcharge for their late filing, and replacement drawings.

In response, on July 28, 2003 (certificate of mailing July 23, 2003), a petition for a one month extension of time and required fee, a declaration executed by Ron Van Beek, President of Van Beek Global/Ninkov L.L.C, assignee, the surcharge, application filing fees, the surcharge, a sheet of replacement drawing and the instant petition were filed. A declaration of facts of Anna M. Nelson accompanies the petition. Ms. Nelson explains that on May 8, 2003 she mailed the declaration to Dr. Ninkov's last known address and Dr. Ninkov received this mailing on May 12, 2003. She states that Dr. Ninkov has not signed or returned the declaration.

A grantable petition under 37 CFR 1.47(b) requires:

(1) proof that the non-signing inventor cannot be reached or refuses to sign the oath or declaration;
(2) an acceptable oath or declaration;
(3) the petition fee;
(4) a statement of the last known address of the non-signing inventor;
(5) proof of proprietary interest; and
(6) proof of irreparable damage.

Applicant lacks item (1) set forth above.

As to item (1), Applicant has failed to establish that the inventor has refused to sign the declaration. The proof of the pertinent events should be made by a statement of someone with first hand knowledge of the events.

The Office requires that the non-signing inventor be provided with a complete copy of the application as filed. This includes the specification with claims, drawings, if any, and a declaration. See MPEP 409.03(d). Ms. Nelson's statement of facts does not establish that a complete copy of the application was mailed to Dr. Ninkov's last known address.

Dr. Ninkov cannot make the necessary statements found in the declaration-- i.e. "I have reviewed and understand..." -- without having examined the patent application.

Dr. Ninkov must have the complete application in his possession in order to make an informed decision as to whether he joins in its filing. When petitioner can show that Dr. Ninkov was mailed or received the complete application and that he either refused to sign the declaration or would not respond to the request that he sign the declaration, petitioner will have satisfied this requirement.

In short, petitioner must send Dr. Ninkov a copy of the as filed above-identified application and request that he sign the declaration.

Regarding finances, a review of financial records reveals that petitioner has not been charged the $130 fee associated with filing a petition under 37 CFR 1.47(b). Pursuant to petitioner's authorization, deposit account no. 13-2725 will be charged $130.

Further correspondence with respect to this matter should be addressed as follows:

By mail: Mail Stop PETITION
Commissioner for Patents
Post Office Box 1450
Alexandria, VA 22313-1450

By facsimile: (703) 308-6916
Attn: Office of Petitions

By hand: Office of Petitions
2201 South Clark Place
Crystal Plaza 4, Suite 3C23
Arlington, VA 22202

Telephone inquiries should be directed to the undersigned at (703) 308-6712.

E. Shirene Willis

E. Shirene Willis
Senior Petitions Attorney
Office of Petitions

UNITED STATES PATENT AND TRADEMARK OFFICE

COMMISSIONER FOR PATENTS
UNITED STATES PATENT AND TRADEMARK OFFICE
P.O. BOX 1450
ALEXANDRIA, VA 22313-1450
WWW.USPTO.GOV

DUSAN NINKOV
11839 CAMINITO CORRIENTE
SAN DIEGO CA 92128

COPY MAILED

SEP 1 5 2003

OFFICE OF PETITIONS

In re Application of :
Dusan Ninkov : LETTER
Application No. 10/366,634 :
Filed: February 12, 2003 :
Attorney Docket No.: 12996.9USU1 :

Dear Dr. Ninkov:

You are named as the sole inventor in the above identified United States patent application, filed under the provisions of 35 U.S.C. 116 (United States Code), and 37 CFR 1.47(b), Rules of Practice in Patent Cases. Should a patent be granted on the application you will be designated therein as the sole inventor.

As the named inventor you are entitled to inspect any paper in the file wrapper of the application, order copies of all or any part thereof (at a prepaid cost per 37 CFR 1.19) or make your position of record in the application. Alternatively, you may arrange to do any of the preceding through a registered patent attorney or agent presenting written authorization from you. If you care to join the application, counsel of record (see below) would presumably assist you. Joining in the application would entail the filing of an appropriate oath or declaration by you pursuant to 37 CFR 1.63.

Requests for information regarding your application should be directed to the File Information Unit at (703)308-2733. Information regarding how to pay for and order a copy of the application, or a specific paper in the application, should be directed to Certification Division at (703)308-9726 or 1(800)972-6382 (outside the Washington D.C. area).

Telephone inquiries regarding this communication should be directed to the undersigned at (703) 308-6712.

E. Shirene Willis

E. Shirene Willis
Senior Petitions Attorney
Office of Petitions

ATTORNEY OF RECORD: MERCHANT & GOULD PC
P.O. BOX 2903
MINNEAPOLIS MN 55402-0903

UNITED STATES PATENT AND TRADEMARK OFFICE

COMMISSIONER FOR PATENTS
UNITED STATES PATENT AND TRADEMARK OFFICE
P.O. BOX 1450
ALEXANDRIA, VA 22313-1450
WWW.USPTO.GOV

Paper No. 11

MERCHANT & GOULD PC
P.O. BOX 2903
MINNEAPOLIS MN 55402-0903

COPY MAILED

SEP 1 5 2003

OFFICE OF PETITIONS

In re Application of
Dusan Ninkov
Application No. 10/366,634
Filed: February 12, 2003
Attorney Docket No. 12996.9USU1

: DECISION ACCORDING
: STATUS UNDER
: 37 CFR 1.47(b)

This is in response to the reconsideration petition under 37 CFR 1.47(b), filed September 11, 2003 via facsimile.

The petition is granted.

Petitioner has shown that the non-signing inventor, Dusan Ninkov, has constructively refused to join in the filing of the above-identified application after having been presented with the application papers. Specifically, the declaration of Attorney Anna M. Nelson and accompanying exhibits establish that the inventor was mailed and received the application papers as filed and a declaration, but the inventor has not returned an executed declaration. In addition, petitioner has shown that Van Beek Global/Ninkov LLC has a proprietary interest in the above-identified application with an assignment document. Lastly, petitioner has submitted a declaration in compliance with 37 CFR 1.63 and 1.64 and petitioner has shown that such action is necessary to prevent irreparable damage.

This application and papers have been reviewed and found in compliance with 37 CFR 1.47(b). This application is hereby accorded Rule 1.47(b) status.

As provided in Rule 1.47(c), this Office will forward notice of this application's filing to the non-signing inventor at the address given in the petition. Notice of the filing of this application will also be published in the Official Gazette.

After this decision is mailed, the above-identified application will be forwarded to Technology Center 1600 for examination in due course.

Telephone inquiries should be directed to the undersigned at (703) 308-6712.

E. Shirene Willis

E. Shirene Willis
Senior Petitions Attorney
Office of Petitions

UNITED STATES PATENT AND TRADEMARK OFFICE

Commissioner for Patents
United States Patent and Trademark Office
P.O. Box 1450
Alexandria, VA 22313-1450
www.uspto.gov

CANTOR COLBURN LLP
55 Griffin Road South
Bloomfield CT 06002

MAILED

JUN 0 8 2009

OFFICE OF PETITIONS

In re Patent No. 6,925,722	:	
Issue Date: August 09, 2005	:	
Application No. 10/366,635	:	NOTICE UNDER 37 CFR. 1.28(c)
Filed: February 13, 2003	:	
Attorney Docket No. FAO-0086	:	

This is a notice regarding your request for acceptance of a fee deficiency submission under 37 CFR 1.28. On September 01, 1998, the court of Appeals for the Federal Circuit held that 37 CFR 1.28(c) is the sole provision governing the time for correction of the erroneous payment of the issue fee as a small entity. **See DH Technology v. Synergystex International, Inc. 154 F.3d 1333, 47 USPQ2d 1865 (Fed. Cir. Sept. 1, 1998).**

The Office no longer investigates or rejects original or reissue applications under 37 CFR 1.56. **1098 Off. Gaz. Pat. Office 502 (January 3, 1989).** Therefore, nothing in this Notice is intended to imply that an investigation was done.

Your fee deficiency submission under 37 CFR 1.28 is hereby **ACCEPTED**.

This application is no longer entitled to small entity status. Accordingly, all future fees paid in this application must be paid at the large entity rate.

The file does not indicate a change of address has been submitted, although the address given on the petition differs from the address of record. If appropriate, a change of address should be filed in accordance with MPEP 601.03. A courtesy copy of this decision is being mailed to the address given on the petition; however, the Office will mail all future correspondence solely to the address of record.

Inquiries related to this communication should be directed to the Michelle R. Eason at (571) 272-4231.

Thurman Page
Petitions Examiner
Office of Petitions

cc: **CANTOR COLBURN LLP**
20 CHURCH STREET
22ND FLOOR
HARTFORD, CT 06103

UNITED STATES PATENT AND TRADEMARK OFFICE

Commissioner for Patents
United States Patent and Trademark Office
P.O. Box 1450
Alexandria, VA 22313-1450
www.uspto.gov

CANTOR COLBURN LLP
55 Griffin Road South
Bloomfield CT 06002

MAILED

MAR 16 2009

OFFICE OF PETITIONS

In re Application of	:	
Simon Raab et al.	:	
Application No. 10/366,636	:	NOTICE
Filed: February 13, 2003	:	
Attorney Docket No. FAO-0084	:	

This is a notice regarding your request for acceptance of a fee deficiency submission under 37 CFR 1.28, filed January 23, 2009.

The Office no longer investigates or rejects original or reissue applications under 37 CFR 1.56. 1098 Off. Gaz. Pat. Office 502 (January 3, 1989). Therefore, nothing in this Notice is intended to imply that an investigation was done.

Your fee deficiency submission under 37 CFR 1.28 is hereby ACCEPTED.

This application is no longer entitled to small entity status. Accordingly, all future fees paid in this application must be paid at the large entity rate.

Inquiries related to this communication should be directed to JoAnne Burke at (571) 272-4594.

Ramesh Krishnamurthy

Ramesh Krishnamurthy
Petitions Examiner
Office of Petitions

UNITED STATES PATENT AND TRADEMARK OFFICE

Commissioner for Patents
United States Patent and Trademark Office
P.O. Box 1450
Alexandria, VA 22313-1450
www.uspto.gov

COPY MAILED

APR 30 2007

OFFICE OF PETITIONS

ROBERT W STROZIER, P.L.L.C
PO BOX 429
BELLAIRE, TX 77402-0429

In re Application of	:	
Sipos, et al.	:	
Application No.: 10/366,677	:	ON PETITION
Filed: February 13, 2003	:	
Attorney Docket No: 00014/10UTL	:	

This is a decision on the petition under 37 CFR §1.137(b), November 24, 2006, to revive the above-identified application.

The petition is GRANTED.

This application became abandoned for failure to file an appeal brief within two months after the filing of the Notice of Appeal on April 20, 2006. It is noted that the Notice of Appeal was also accompanied by an amendment that was intended to be responsive to the final Office action mailed January 9, 2006. An Advisory Action mailed May 5, 2006, advised petitioner that the reply of April 20, 2006, did not place the application in condition for allowance. A Notice of Abandonment was mailed on November 27, 2006.

The Request for Continued Examination, filed November 24, 2006, is made of record.

The application is being forwarded to Technology Center 3700, GAU 3723 for further processing.

Telephone inquiries concerning this decision should be directed to the undersigned at (571) 272-3222.

Kenya A. McLaughlin
Petitions Attorney
Office of Petitions

UNITED STATES PATENT AND TRADEMARK OFFICE

COMMISSIONER FOR PATENTS
UNITED STATES PATENT AND TRADEMARK OFFICE
P.O. BOX 1450
ALEXANDRIA, VA 22313-1450
www.uspto.gov

COPY MAILED

JAN 24 2005

OFFICE OF PETITIONS

CANTOR COLBURN LLP
55 Griffin Road South
Bloomfield CT 06002

In re Application of :
Simon Raab, et al. :
Application No. 10/366,680 : ON PETITION
Filed: February 13, 2003 :
Attorney Docket No. FAO-0078 :

This is a decision on the petition under 37 CFR 1.313(c)(2), filed January 18, 2005, requesting that the above-identified application be withdrawn from issue. A Request for Continued Examination (RCE) and an Information Disclosure Statement (IDS) accompanied the present petition.

The petition is dismissed as moot.

Since the RCE was filed within the period set for paying the issue fee, as required by the Notice of Allowance and Issue Fee Due mailed December 20, 2004, prosecution is reopened in the present application and no petition under 37 CFR 1.313 is necessary.

The application is being referred to Technology Center AU 2859 for processing of the RCE under 37 CFR 1.114.

Telephone inquiries should be directed to the undersigned at (571) 272-3204.

Sherry D. Brinkley
Petitions Examiner
Office of Petitions
Office of the Deputy Commissioner
for Patent Examination Policy

UNITED STATES PATENT AND TRADEMARK OFFICE

Commissioner for Patents
United States Patent and Trademark Office
P.O. Box 1450
Alexandria, VA 22313-1450
www.uspto.gov

SCOTT D. ANDERSON
FOLEY & LARDNER
SUITE 3800
777 EAST WISCONSIN AVENUE
MILWAUKEE WI 53202-5306

COPY MAILED

JUN 21 2006

OFFICE OF PETITIONS

In re Patent No. 7,007,318	
Kevin W. Bork et al.	
Issue Date: March 7, 2006	LETTER REGARDING
Application No. 10/366,681	PATENT TERM ADJUSTMENT
Filed: February 12, 2003	
Attorney Docket No. 063359-0286	

This letter is in response to the "COMMUNICATION REGARDING PATENT TERM ADJUSTMENT", filed March 27, 2006, notifying the Office of an error in Applicants' favor in the initial determination of patent term adjustment under 35 U.S.C. § 154(b). Applicants state that the patent term adjustment to date is two hundred forty one (241) days, not three hundred twenty seven (327) days.

The request is **DISMISSED**.

On March 7, 2006, the above-identified application matured into U.S. Patent No. 7,007,318. The patent issued with a Patent Term Adjustment of 327 days. Patentees submit that drawings were filed November 10, 2004 with the Issue Fee, after the mailing of the Notice of Allowance on August 10, 2004.

A review of the application history confirms that the patent term adjustment of 327 days indicated in the PAIR database and on the patent is in error since drawings were filed after the mailing of the notice of allowance. A period of reduction in the amount of 120 days should therefore have been assessed for applicant delay pursuant to 37 CFR 1.705(c)(10).

Patentees do not dispute that the initial determination of patent term adjustment at the time of the mailing of the notice of allowance was zero (0) days. However, after the mailing of the notice of allowance, a period of adjustment of 327 days was entered in the application.

Patentees now dispute the Office reduction of the 327 days by 33 days for applicant delay in filing a response to the Notice to File Missing Parts of Application mailed May 1, 2003 and by 1 day for applicant delay in payment of the issue fee, in response to the Notice of Allowance mailed August 10, 2004.

The instant request was filed within 2 months of the issue date of the patent. However, neither the fee under § 1.18(e) nor a general authorization to charge any required fees, accompanied the request. Accordingly, the request is dismissed for failure to comply with the requirement of paragraph (b)(1) to submit the fee under §1.18(e).

Patentee is given **TWO (2) MONTHS** from the mail date of this decision to respond to this decision. No extensions of time will be granted under § 1.136. A copy of this decision should accompany the request. Patentee may seek such consideration without payment of an additional fee. However, as to all other bases for seeking reconsideration of the patent term adjustment indicated in the patent, all requirements of § 1.705(d) must be met. Requests for reconsideration on other bases must be timely filed and must include payment of the required fee.

Telephone inquiries specific to this letter should be directed to Senior Petitions Attorney, Patricia Faison-Ball at (571) 272-3212.

Nancy Johnson
Senior Petitions Attorney
Office of Petitions

UNITED STATES PATENT AND TRADEMARK OFFICE

Commissioner for Patents
United States Patent and Trademark Office
P.O. Box 1450
Alexandria, VA 22313-1450
www.uspto.gov

MILLEN, WHITE, ZELANO & BRANIGAN, P.C.
2200 CLARENDON BLVD.
SUITE 1400
ARLINGTON, VA 22201

COPY MAILED

JAN 3 1 2005

OFFICE OF PETITIONS

In re Patent No. 6,843,918	:	
Issue Date: January 18, 2005	:	
Application No. 10/366,689	:	NOTICE
Filed: February 14, 2003	:	
Attorney Docket No. HIRSCH-4	:	

This is a notice regarding your request for acceptance of a fee deficiency submission under 37 CFR 1.28. On September 1, 1998, the Court of Appeals for the Federal Circuit held that 37 CFR 1.28(c) is the sole provision governing the time for correction of the erroneous payment of the issue fee as a small entity. **See DH Technology v. Synergystex International, Inc. 154 F.3d 1333, 47 USPQ2d 1865 (Fed. Cir. Sept. 1, 1998).**

The Office no longer investigates or rejects original or reissue applications under 37 CFR 1.56. **1098 Off. Gaz. Pat. Office 502 (January 3, 1989)**. Therefore, nothing in this Notice is intended to imply that an investigation was done.

Your fee deficiency submission under 37 CFR 1.28 is hereby **ACCEPTED**.

This file is being forwarded to the Files Repository.

Inquiries related to this communication should be directed to the undersigned at (571) 272-3226.

Andrea Smith
Petitions Examiner
Office of Petitions
Office of the Deputy Commissioner
for Patent Examination Policy

UNITED STATES PATENT AND TRADEMARK OFFICE

Commissioner for Patents
United States Patent and Trademark Office
P.O. Box 1450
Alexandria, VA 22313-1450
www.uspto.gov

NATH & ASSOCIATES
112 SOUTH WEST STREET
ALEXANDRIA, VA 22314

COPY MAILED

APR 18 2007

OFFICE OF PETITIONS

In re Application of	:	
Peter J. Ianniello et al	:	
Application No. 10/366,691	:	DECISION GRANTING PETITION
Filed: February 14, 2003	:	UNDER 37 CFR 1.137(b)
Attorney Docket No. 90494U	:	

This is a decision on the petition under 37 CFR 1.137(b), filed September 6, 2006, to revive the above-identified application.

The petition is **GRANTED**.

The above-identified application became abandoned for failure to reply in a timely manner to the non-final Office action mailed March 18, 2005, which set a shortened statutory period for reply of three (3) months. No extensions of time under the provisions of 37 CFR 1.136(a) were obtained. Accordingly, the above-identified application became abandoned on June 19, 2005. A Notice of Abandonment was mailed on September 27, 2005.

The petition satisfies the conditions for revival pursuant to the provisions of 37 CFR 1.137(b) in that (1) the reply, (2) the $750 petition fee, and (3) an adequate statement of unintentional delay have been received. Accordingly, the reply to the non-final Office action of March 18, 2005 is accepted as having been unintentionally delayed.

It is not apparent whether the person signing the statement of unintentional delay was in a position to have firsthand or direct knowledge of the facts and circumstances of the delay at issue. Nevertheless, such statement is being treated as having been made as the result of a reasonable inquiry into the facts and circumstances of such delay. See 37 CFR 10.18(b) and Changes to Patent Practice and Procedure; Final Rule Notice, 62 Fed. Reg. 53131, 53178 (October 10, 1997), 1203 Off. Gaz. Pat. Office 63, 103 (October 21, 1997). In the event that such an inquiry has not been made, petitioner must make such an inquiry. If such inquiry results in the discovery that it is not correct that the entire delay in filing the required reply from the due date for

the reply until the filing of a grantable petition pursuant to 37 CFR 1.137(b) was unintentional, petitioner must notify the Office.

The rule at 37 CFR 1.137(b)(3) requires a statement that "the entire delay in filing the required reply from the due date for the reply until the filing of a grantable petition pursuant to 37 CFR 1.137(b) was unintentional." Since the statement appearing in the petition varies from the language of the rule, the statement is being construed as the statement required by 37 CFR 1.137(b)(3). Petitioner must notify the Office if this is **not** a correct interpretation of the statement appearing in the petition.

Telephone inquiries concerning this decision should be directed to the undersigned at (571) 272-3218.

This matter is being referred to Technology Center AU 1733 for appropriate action in the normal course of business on the reply received September 6, 2006.

Frances Hicks
Petitions Examiner
Office of Petitions

UNITED STATES PATENT AND TRADEMARK OFFICE

Commissioner for Patents
United States Patent and Trademark Office
P.O. Box 1450
Alexandria, VA 22313-1450
www.uspto.gov
DIW Oct-06

NATH & ASSOCIATES
112 SOUTH WEST STREET
ALEXANDRIA VA 22314

COPY MAILED
OCT 24 2006
OFFICE OF PETITIONS

In re Application of	:	
Ianneillo et al.	:	
Application No. 10/366,692	:	DECISION ON PETITION
Filed: 14 February, 2003	:	
Atty Docket No. 90506U	:	

This is a decision on the petition filed on 12 July, 2006, under 37 CFR 1.137(b), [1] to revive the above-identified application.

The petition is **GRANTED**.

The application became abandoned on 12 November, 2005, for failure to timely and properly reply to the final Office action mailed 11 August, 2005, which set a three (3) month shortened statutory period for reply. No extension of the time for reply in accordance with 37 CFR 1.136(a) were obtained. Notice of Abandonment was mailed on 13 April, 2006.

Petitioner has filed a Request for Continued Examination (RCE) and an amendment as the required reply under 37 CFR 1.114.

---

[1] Effective December 1, 1997, the provisions of 37 CFR 1.137(b) now provide that where the delay in reply was unintentional, a petition may be filed to revive an abandoned application or a lapsed patent pursuant to 37 CFR 1.137(b). A grantable petition filed under the provisions of 37 CFR 1.137(b) must be accompanied by:

(1) the required reply, unless previously filed. In a nonprovisional application abandoned for failure to prosecute, the required reply may be met by the filing of a continuing application. In a nonprovisional utility or plant application filed on or after June 8, 1995, and abandoned for failure to prosecute, the required reply may also be met by the filing of a request for continuing examination in compliance with § 1.114. In an application or patent, abandoned or lapsed for failure to pay the issue fee or any portion thereof, the required reply must be the payment of the issue fee or any outstanding balance thereof. In an application, abandoned for failure to pay the publication fee, the required reply must include payment of the publication fee.

(2) the petition fee as set forth in 37 CFR 1.17(m);

(3) a statement that the entire delay in filing the required reply from the due date for the reply until the filing of a grantable petition pursuant to 37 CFR 1.137(b) was unintentional. The Commissioner may required additional information where there is a question whether the delay was unintentional; and

(4) any terminal disclaimer (and fee as set forth in 37 CFR 1.20(d)) required pursuant to 37 CFR 1.137(c)).

The statement contained in the instant petition does not set forth that the entire delay from the due date of the required reply to the date of the filing of a grantable petition was unintentional as required by 37 CFR 1.137(b)(3). However, the statement contained in the instant petition is being so construed. Petitioner **must** notify the Office if this is not a correct interpretation.

This application is being referred to the Technology Center for further processing.

Telephone inquiries concerning this matter may be directed to the undersigned at (571) 272-3231.

D Wood

Douglas I. Wood
Senior Petitions Attorney
Office of Petitions

UNITED STATES PATENT AND TRADEMARK OFFICE

Commissioner for Patents
United States Patent and Trademark Office
P.O. Box 1450
Alexandria, VA 22313-1450
www.uspto.gov

COPY MAILED

SEP 15 2009

OFFICE OF PETITIONS

THE NATH LAW GROUP
112 South West Street
Alexandria VA 22314

In re Application of	:	
Peter J. IANNIELLO et al.	:	
Application No. 10/366,692	:	DECISION ON PETITION
Filed: February 14, 2003	:	
Attorney Docket No. **90506U**	:	

This is a decision on the petition under the unintentional provisions of 37 CFR 1.137(b), filed June 12, 2009, to revive the above-identified application.

The petition is **GRANTED**.

This application became abandoned as a result of petitioner's failure to file an appeal brief (and fee required by 37 CFR 41.20(b)(2)) within the time period provided in 37 CFR 41.37(a)(1). As an appeal brief (and appeal brief fee) was not filed within two (2) months of the Notice of Appeal filed January 18, 2008, and no extensions of time under the provisions of 37 CFR 1.136(a) were obtained, the appeal was dismissed and the proceedings as to the rejected claims were terminated. See 37 CFR 1.197(b). As no claim was allowed, the application became abandoned on March 19, 2008. See MPEP 1215.04.

The petition satisfies the requirements of 37 CFR 1.137(b) in that petitioner has supplied (1) the reply in the form of a Request for Continued Examination (RCE) and fee of $405, and the submission required by 37 CFR 1.114; (2) the petition fee of $810; and (3) a proper statement of unintentional delay. Accordingly, the reply to the final Office Action of July 18, 2007 is accepted as having been unintentionally delayed.

Telephone inquiries concerning this decision should be directed to Tredelle Jackson at (571) 272-2783.

This application is being referred to Technology Center AU 1794 for processing of the RCE and for appropriate action by the Examiner in the normal course of business on the amendment submitted in accordance with 37 CFR 1.114.

Ramesh Krishnamurthy

Ramesh Krishnamurthy
Petitions Examiner
Office of Petitions

UNITED STATES PATENT AND TRADEMARK OFFICE

COMMISSIONER FOR PATENTS
UNITED STATES PATENT AND TRADEMARK OFFICE
P.O. BOX 1450
ALEXANDRIA, VA 22313-1450
www.uspto.gov

MAR 24 2004

STEPHEN B. MAEBIUS
FOLEY AND LARDNER
SUITE 500
3000 K STREET NW
WASHINGTON DC 20007

In re Application of	:
David Modrak	:
Serial No.: 10/366,704	: WITHDRAWAL OF ATTORNEY
Filed: February 14, 2003	:
Attorney Docket No.: 018734-0201	:

This is in response to applicants' attorneys' request, filed February 26, 2004, to withdraw from representation in the above identified application.

37 CFR 10.40 Withdrawal from employment.
(b) Mandatory withdrawal . A practitioner representing a client before the Office shall withdraw from employment if:
(1) The practitioner knows or it is obvious that the client is bringing a legal action, commencing a proceeding before the Office, conducting a defense, or asserting a position in litigation or any proceeding pending before the Office, or is otherwise having steps taken for the client, merely for the purpose of harassing or maliciously injuring any person;
(2) The practitioner knows or it is obvious that the practitioner's continued employment will result in violation of a Disciplinary Rule;
(3) The practitioner's mental or physical condition renders it unreasonably difficult for the practitioner to carry out the employment effectively; or
(4) The practitioner is discharged by the client.
(c) Permissive withdrawal. If paragraph (b) of this section is not applicable, a practitioner may not request permission to withdraw in matters pending before the Office unless such request or such withdrawal is because:
(1) The petitioner's client:
(i) Insists upon presenting a claim or defense that is not warranted under existing law and cannot be supported by good faith argument for an extension, modification, or reversal of existing law;
(ii) Personally seeks to pursue an illegal course of conduct;
(iii) Insists that the practitioner pursue a course of conduct that is illegal or that is prohibited under a Disciplinary Rule;
(iv) By other conduct renders it unreasonably difficult for the practitioner to carry out the employment effectively;
(v) Insists, in a matter not pending before a tribunal, that the practitioner engage in conduct that is contrary to the judgment and advice of the practitioner but not prohibited under the Disciplinary Rule; or
(vi) Has failed to pay one or more bills rendered by the practitioner for an unreasonable period of time or has failed to honor an agreement to pay a retainer in advance of the performance of legal services.
(2) The practitioner's continued employment is likely to result in a violation of a Disciplinary Rule;
(3) The practitioner's inability to work with co-counsel indicates that the best interests of the client likely will be served by withdrawal;
(4) The practitioner's mental or physical condition renders it difficult for the practitioner to carry out the employment effectively;
(5) The practitioner's client knowingly and freely assents to termination of the employment; or

(6) The practitioner believes in good faith, in a proceeding pending before the Office, that the Office will find the existence of other good cause for withdrawal.

Applicants' attorney has provided no reason for withdrawal, as required.

The request to withdraw is **DISMISSED**.

Should there be any questions with regard to this letter please contact William R. Dixon, Jr. by letter addressed to the Director, Technology Center 1600, PO BOX 1450, ALEXANDRIA, VA 22313-1450, or by telephone at 571-272-0519 or by facsimile transmission at Office facsimile number.

William R. Dixon, Jr.
Special Program Examiner
Technology Center 1600

UNITED STATES PATENT AND TRADEMARK OFFICE

COMMISSIONER FOR PATENTS
UNITED STATES PATENT AND TRADEMARK OFFICE
P.O. BOX 1450
ALEXANDRIA, VA 22313-1450
www.uspto.gov

MAR 18 2004

STEPHEN B. MAEBIUS
FOLEY AND LARDNER
SUITE 500
3000 K STREET NW
WASHINGTON DC 20007

In re Application of	:
Richard A. George Kinge	:
Serial No.: 10/366,709	: WITHDRAWAL OF ATTORNEY
Filed: February 14, 2003	:
Attorney Docket No.: 018733-1155	:

This is in response to applicants' attorneys' request, filed February 26, 2004, to withdraw from representation in the above identified application.

37 CFR 10.40 Withdrawal from employment.
(b) Mandatory withdrawal . A practitioner representing a client before the Office shall withdraw from employment if:
(1) The practitioner knows or it is obvious that the client is bringing a legal action, commencing a proceeding before the Office, conducting a defense, or asserting a position in litigation or any proceeding pending before the Office, or is otherwise having steps taken for the client, merely for the purpose of harassing or maliciously injuring any person;
(2) The practitioner knows or it is obvious that the practitioner's continued employment will result in violation of a Disciplinary Rule;
(3) The practitioner's mental or physical condition renders it unreasonably difficult for the practitioner to carry out the employment effectively; or
(4) The practitioner is discharged by the client.
(c) Permissive withdrawal. If paragraph (b) of this section is not applicable, a practitioner may not request permission to withdraw in matters pending before the Office unless such request or such withdrawal is because:
(1) The petitioner's client:
(i) Insists upon presenting a claim or defense that is not warranted under existing law and cannot be supported by good faith argument for an extension, modification, or reversal of existing law;
(ii) Personally seeks to pursue an illegal course of conduct;
(iii) Insists that the practitioner pursue a course of conduct that is illegal or that is prohibited under a Disciplinary Rule;
(iv) By other conduct renders it unreasonably difficult for the practitioner to carry out the employment effectively;
(v) Insists, in a matter not pending before a tribunal, that the practitioner engage in conduct that is contrary to the judgment and advice of the practitioner but not prohibited under the Disciplinary Rule; or
(vi) Has failed to pay one or more bills rendered by the practitioner for an unreasonable period of time or has failed to honor an agreement to pay a retainer in advance of the performance of legal services.
(2) The practitioner's continued employment is likely to result in a violation of a Disciplinary Rule;
(3) The practitioner's inability to work with co-counsel indicates that the best interests of the client likely will be served by withdrawal;
(4) The practitioner's mental or physical condition renders it difficult for the practitioner to carry out the employment effectively;
(5) The practitioner's client knowingly and freely assents to termination of the employment; or

(6) The practitioner believes in good faith, in a proceeding pending before the Office, that the Office will find the existence of other good cause for withdrawal.

Applicants' attorney has provided no reason for withdrawal, as required.

The request to withdraw is **DISMISSED**.

Should there be any questions with regard to this letter please contact William R. Dixon, Jr. by letter addressed to the Director, Technology Center 1600, PO BOX 1450, ALEXANDRIA, VA 22313-1450, or by telephone at 571-272-0519 or by facsimile transmission at Office facsimile number.

William R. Dixon, Jr.
Special Program Examiner
Technology Center 1600

UNITED STATES PATENT AND TRADEMARK OFFICE

COMMISSIONER FOR PATENTS
UNITED STATES PATENT AND TRADEMARK OFFICE
P.O. BOX 1450
ALEXANDRIA, VA 22313-1450
www.uspto.gov

MAR 18 2004

STEPHEN B. MAEBIUS
FOLEY AND LARDNER
SUITE 500
3000 K STREET NW
WASHINGTON DC 20007

In re Application of	:
Richard A. George Kinge	:
Serial No.: 10/366,709	: WITHDRAWAL OF ATTORNEY
Filed: February 14, 2003	:
Attorney Docket No.: 018733-1155	:

This is in response to applicants' attorneys' request, filed February 26, 2004, to withdraw from representation in the above identified application.

37 CFR 10.40 Withdrawal from employment.
(b) Mandatory withdrawal . A practitioner representing a client before the Office shall withdraw from employment if:
(1) The practitioner knows or it is obvious that the client is bringing a legal action, commencing a proceeding before the Office, conducting a defense, or asserting a position in litigation or any proceeding pending before the Office, or is otherwise having steps taken for the client, merely for the purpose of harassing or maliciously injuring any person;
(2) The practitioner knows or it is obvious that the practitioner's continued employment will result in violation of a Disciplinary Rule;
(3) The practitioner's mental or physical condition renders it unreasonably difficult for the practitioner to carry out the employment effectively; or
(4) The practitioner is discharged by the client.
(c) Permissive withdrawal. If paragraph (b) of this section is not applicable, a practitioner may not request permission to withdraw in matters pending before the Office unless such request or such withdrawal is because:
(1) The petitioner's client:
(i) Insists upon presenting a claim or defense that is not warranted under existing law and cannot be supported by good faith argument for an extension, modification, or reversal of existing law;
(ii) Personally seeks to pursue an illegal course of conduct;
(iii) Insists that the practitioner pursue a course of conduct that is illegal or that is prohibited under a Disciplinary Rule;
(iv) By other conduct renders it unreasonably difficult for the practitioner to carry out the employment effectively;
(v) Insists, in a matter not pending before a tribunal, that the practitioner engage in conduct that is contrary to the judgment and advice of the practitioner but not prohibited under the Disciplinary Rule; or
(vi) Has failed to pay one or more bills rendered by the practitioner for an unreasonable period of time or has failed to honor an agreement to pay a retainer in advance of the performance of legal services.
(2) The practitioner's continued employment is likely to result in a violation of a Disciplinary Rule;
(3) The practitioner's inability to work with co-counsel indicates that the best interests of the client likely will be served by withdrawal;
(4) The practitioner's mental or physical condition renders it difficult for the practitioner to carry out the employment effectively;
(5) The practitioner's client knowingly and freely assents to termination of the employment; or

(6) The practitioner believes in good faith, in a proceeding pending before the Office, that the Office will find the existence of other good cause for withdrawal.

Applicants' attorney has provided no reason for withdrawal, as required.

The request to withdraw is **DISMISSED**.

Should there be any questions with regard to this letter please contact William R. Dixon, Jr. by letter addressed to the Director, Technology Center 1600, PO BOX 1450, ALEXANDRIA, VA 22313-1450, or by telephone at 571-272-0519 or by facsimile transmission at Office facsimile number.

William R. Dixon, Jr.
Special Program Examiner
Technology Center 1600

UNITED STATES PATENT AND TRADEMARK OFFICE

COMMISSIONER FOR PATENTS
UNITED STATES PATENT AND TRADEMARK OFFICE
P.O. BOX 1450
ALEXANDRIA, VA 22313-1450
www.uspto.gov

Paper No. 4

WILEY, REIN & FIELDING, LLP
ATTN: PATENT ADMINISTRATION
1776 K. STREET N.W.
WASHINGTON, DC 20006

COPY MAILED

MAY 1 5 2003

OFFICE OF PETITIONS

In re Application of	:	
Dartiel et al.	:	
Application No. 10/366,715	:	DECISION ON PETITION
Filed: February 14, 2003	:	
Attorney Docket No. GC00026	:	

This is a decision on the petition filed May 7, 2003, requesting, in effect, that the "Notice to File Missing Parts" mailed April 23, 2003, be withdrawn to the extent that it states that Figure 3 is missing.

The petition is **dismissed**.

The application was filed on February 14, 2003. On April 23, 2003, the Office of Initial Patent Examination mailed a Notice stating that the application had been accorded a filing date of February 14, 2003, and advising applicants that Figure 3 described in the specification appeared to have been omitted.

In response, the present petition was filed. Petitioner argues that petitioner did not intend to file a "Figure 3" but only to file Figures 3A, 3B, and 3C. The petition states, "'Figure 3' without a following letter designation does not actually exist."

It is obvious from petitioner's explanation that no drawings were actually missing on February 14, 2003. However, the Notice mailed April 23, 2003, was correct in stating that Figure 3 described in the specification appeared to have been omitted. Therefore, the "Notice" was properly mailed and will not be withdrawn.[1]

---

[1] Attention is directed to MPEP 601.01(g) which reads in part:

The Office of Initial Patent Examination (OIPE) reviews application papers to determine whether all of the figures of the drawings that are mentioned in the specification are present in the application. If the application is filed without all the drawing figure(s) referred to in the specification, and the application [is entitled to a filing date], OIPE will mail a "Notice of Omitted Item(s)" indicating that the application papers . . . are lacking some of the figures of drawings described in the specification.

Each application received by OIPE must be individually reviewed for compliance with both the statutory requirements for according an application a filing date and for compliance with various requirements of the rules. Many of the applications concern complex technology. Accordingly, the employees of OIPE, who are not trained engineers or scientists, are not expected to make a detailed comparison of the written description and drawings. To do so would require a greater expenditure of time and resources, with a resulting increased cost, than are currently allocated. In the past, applicants and practitioners have indicated to the PTO that such increases are undesired. Therefore, if a Figure listed in the specification is not present, OIPE sends a Notice of Missing Parts and does not examine the content of the drawings and specification to determine whether the Figure may have been unlabeled or mislabeled.

Since the present petition was not necessitated by any error on the part of the Office, the $130 petition fee will not be refunded. Petitioner has not proven that a "Figure 3" was present at the time the application was filed.

The original application papers will include only those application papers present on the date of deposit.

The application is being returned to the Office of Initial Patent Examination for further processing with a filing date of February 14, 2003, using the papers filed on that date.

Telephone inquiries should be directed to Petitions Attorney Steven Brantley at (703) 306-5683.

Charles Steven Brantley
Petitions Attorney
Office of Petitions

UNITED STATES PATENT AND TRADEMARK OFFICE

COMMISSIONER FOR PATENTS
UNITED STATES PATENT AND TRADEMARK OFFICE
P.O. BOX 1450
ALEXANDRIA, VA 22313-1450
www.uspto.gov

FLYNN BARRRISON
DARBY & DARBY PC
P.O. BOX 5257
NEW YORK, NY 10150-5257

COPY MAILED
DEC 2 0 2006
OFFICE OF PETITIONS

In re Patent No. 7,002,433	:	
Issue Date: February 21, 2006	:	
Application No. 10/366,729	:	ON PETITION
Filed: February 14, 2003	:	
Attorney Docket No. 5779/0M093	:	

This is a decision on the petition filed March 21, 2006, which is being treated as a request under 37 CFR 3.81(b)[1] to correct the name of the assignee on the front page of the above-identified patent by way of a Certificate of Correction.

The request is **GRANTED**.

Telephone inquiries concerning this decision may be directed to the undersigned at (571) 272-3204. Inquiries regarding the issuance of a certificate of correction should be directed to the Certificate of Correction Branch at (571) 272-4200.

The Certificates of Correction Branch will be notified of this decision granting the petition under 37 CFR 3.81(b) and directing issuance of the requested Certificate of Correction.

Sherry D. Brinkley
Petitions Examiner
Office of Petitions

[1] *See* MPEP 1309, subsection II; and Official Gazette of June 22, 2004.

UNITED STATES PATENT AND TRADEMARK OFFICE

COMMISSIONER FOR PATENTS
UNITED STATES PATENT AND TRADEMARK OFFICE
P.O. BOX 1450
ALEXANDRIA, VA 22313-1450
www.uspto.gov

Paper No.

Sheldon R. Meyer, Esq.
FLIESLER, DUBB, MEYER & LOVEJOY LLP
Suite 400
Four Embarcadero Center
San Francisco, CA 94111-4156

COPY MAILED

JUL 2 0 2005

OFFICE OF PETITIONS

In re Application of	:	
Zayas et al.	:	DECISION ON APPLICATION FOR
Application No. 10/366,750	:	PATENT TERM ADJUSTMENT
Filed: February 14, 2003	:	
Atty Docket No. PANA-01055US1	:	
SRM/MLR	:	

This is a decision on the "APPLICATION FOR PATENT TERM ADJUSTMENT UNDER 37 C.F.R. §1.705" filed January 18, 2005. Applicants request that the initial determination of patent term adjustment under 35 U.S.C. 154(b) be corrected from zero (0) days to two (2) days.

The application for patent term adjustment is **GRANTED**.

The Office has updated the PAIR screen to reflect that the correct Patent Term Adjustment (PTA) determination at the time of the mailing of the Notice of Allowance is two (2) days. A copy of the updated PAIR screen, showing the correct determination, is enclosed.

On October 20, 2004, the Office mailed the Determination of Patent Term Adjustment under 35 U.S.C. 154(b) in the above-identified application. The Notice stated that the patent term adjustment (PTA) to date is 0 days. The period of adjustment of 33 days for Office delay was reduced by periods of 66 and 31 days for applicant delay. On January 18, 2005, applicants timely[1] submitted an application for patent term adjustment (with

[1] PALM records show that the Issue Fee payment was also received on January 18, 2005.

required fee), asserting that the correct number of days of PTA at the time of the mailing of the Notice of Allowance is 2 days. Applicants dispute the reduction of 66 days attributed to their delay in responding to the Notice to File Missing Parts of Application mailed April 25, 2003.

Applicants state that the patent issuing from the application is not subject to a terminal disclaimer.

Applicants are correct. Their response to the Notice to File Missing Parts of Application mailed April 25, 2003, is of record in the application with a date of receipt by the Office of June 13, 2003. Furthermore, the response included a complete reply to the Notice. Thus, the Office should not have assessed applicants a delay of 66 days. The response was filed within the three-month period under 37 CFR 1.704(b). Thus, applicants did not fail to engage in reasonable efforts to conclude prosecution of the application by delaying in replying to the Notice to File Missing Parts of Application.

In view thereof, the correct determination of patent term adjustment at the time of the mailing of the Notice of Allowance is two (2) days.

The Office acknowledges submission of the $200.00 fee set forth in 37 CFR 1.18(e). No additional fees are required.

The Office will forward the file to the Office of Patent Publication so that a patent can be issued.

Telephone inquiries specific to this matter should be directed to Nancy Johnson, Senior Petitions Attorney, at (571) 272-3219.

Karin A Ferriter
per

Karin Ferriter
Senior Legal Advisor
Office of Patent Legal Administration
Office of Deputy Commissioner
for Patent Examination Policy

Enclosure: Copy of Revised PAIR Screen

UNITED STATES PATENT AND TRADEMARK OFFICE

Commissioner for Patents
United States Patent and Trademark Office
P.O. Box 1450
Alexandria, VA 22313-1450
www.uspto.gov

052007

MAILED FROM
DIRECTORS OFFICE

MAY 29 2007

TECHNOLOGY CENTER 2800

AGILENT TECHNOLOGIES, INC.
Intellectual Property Administration
Legal Department, DL429
P.O. Box 7599
Loveland, CO 80537-0599

In re Application of:	:	
Russell W. Gruhlke et al.	:	DECISION *SUA SPONTE*
Serial No.: 10/366,755	:	WITHDRAWING HOLDING
Filed: February 13, 2003	:	OF ABANDONMENT
Attorney Docket No.: 10030301-1	:	

This is a decision, *sua sponte*, withdrawing the holding of abandonment of the above-identified application.

A Notice of Allowance was mailed on December 13, 2006, requiring that the fees be paid within three months of its mail date. In the absence of payment of the required issue fee, the application was held abandoned and a Notice of Abandonment was mailed on May 18, 2007.

Although no petition or request to withdraw the holding of abandonment in this application has been filed, the Notice of Abandonment is hereby vacated, the holding of abandonment withdrawn and the application restored to pending in view of the fact that a Request for Continued Examination (RCE) was filed on March 13, 2007 along with an Information Disclosure Statement as the required submission. However, the USPTO incorrectly mailed a Notice of Improper Request for Continued Examination (Notice) on April 17, 2007 to indicate that applicant failed to include a submission with the RCE. The Notice was improperly issued and is hereby vacated. The application is not abandoned in fact. Inconvenience to the applicant is regretted.

The RCE will be processed and an Office action will be issued in due course.

Any inquiry regarding this decision should be directed to Hien H. Phan, Special Program Examiner, at (571) 272-1606.

Robert Oberleitner, Group Director
Technology Center 2800
Semiconductors, Electrical and Optical
Systems and Components

UNITED STATES PATENT AND TRADEMARK OFFICE

Commissioner for Patents
United States Patent and Trademark Office
P.O. Box 1450
Alexandria, VA 22313-1450
www.uspto.gov

Paper No.

COPY MAILED

OCT 29 2008

OFFICE OF PETITIONS

DOCKET CLERK
P.O. DRAWER 800889
DALLAS TX 75380

In re Application of	:	
Herle et al.	:	DECISION ON LETTER
Application No. 10/366,758	:	REGARDING
Filed: February 14, 2003	:	PATENT TERM ADJUSTMENT
Atty Docket No. SAMS01-00256	:	

This letter is in response to the "GOOD FAITH AND CANDOR LETTER REGARDING PATENT TERM ADJUSTMENT," filed on May 5, 2008. Applicants request, pursuant to applicant's duty of good faith and candor to the Office, that the initial determination of patent term adjustment under 35 USC 154(b) be set at 561 days. The request is treated as a request to reduce the patent term adjustment from 740 days to 561 days.

The request for correction of the initial determination of patent term adjustment (PTA) is **DISMISSED**.

On February 4, 2008, the Office mailed the Determination of Patent Term Adjustment under 35 USC 154(b) in the above-identified application. The Notice stated that the patent term adjustment to date is seven hundred forty (740) days.

The Office initially determined a patent term adjustment of seven hundred forty (740) days, pursuant to 35 USC 154(b). This was reduced by no (0) days of applicant delay pursuant to 37 CFR 1.704(b).

The patent term adjustment calculations to date have been reviewed and are found to be correct.

As the instant letter was submitted to advise the Office of an error in Applicant's favor, the $200.00 application fee under 37 CFR 1.705(b) was not required, and has not been charged.

To the extent that applicants are aware of any specific error in the PTA calculation, applicants should so advise the Office.

The Office thanks Applicants for their good faith and candor in bringing this matter to the attention of the Office.

The application is being forwarded to the Office of Data Management for issuance of a patent. The patent term adjustment indicated on the patent (as shown on the Issue Notification mailed about three weeks prior to patent issuance) will include any additional adjustment accrued both for Office delay in issuing the patent more than four months after payment of the issue fee and satisfaction of all outstanding requirements, and for the Office taking in excess of three years to issue the patent (to the extent that the three-year period does not overlap with periods already accorded).

Telephone inquiries specific to this matter should be directed to Douglas I. Wood, Senior Petitions Attorney, at (571) 272-3231.

Nancy Johnson
Senior Petitions Attorney
Office of Petitions

UNITED STATES PATENT AND TRADEMARK OFFICE

COMMISSIONER FOR PATENTS
UNITED STATES PATENT AND TRADEMARK OFFICE
P.O. BOX 1450
ALEXANDRIA, VA 22313-1450
www.uspto.gov

Paper No. 8

GREER, BURNS & CRAIN
300 S WACKER DR
25TH FLOOR
CHICAGO, IL 60606

COPY MAILED

DEC 0 9 2003

OFFICE OF PETITIONS

In re Application of Cobb Application No. 10/366,760 Filed: February 14, 2003 Attorney Docket No. 2322.67354 For: BICYCLE FORK	: : : : : :	DECISION GRANTING PETITION UNDER 37 CFR 1.47

This is in response to the petition under 37 CFR 1.47(b), filed August 25, 2003.

The petition is granted.

Petitioner has shown that the non-signing inventor has refused to join in the filing of the above-identified application after having been presented with the application papers.

This application and papers have been reviewed and found in compliance with 37 CFR 1.47(b). This application is hereby accorded Rule 1.47(b) status.

As provided in Rule 1.47(c), this Office will forward notice of this application's filing to the non-signing inventor at the address given in the petition. Notice of the filing of this application will also be published in the Official Gazette.

After this decision is mailed, the above-identified application will be forwarded to the Office of Initial Patent Examination for further processing.

Telephone inquiries should be directed to Petitions Attorney Steven Brantley at (703) 306-5683.

Charles Steven Brantley
Petitions Attorney
Office of Petitions

UNITED STATES PATENT AND TRADEMARK OFFICE

COMMISSIONER FOR PATENTS
UNITED STATES PATENT AND TRADEMARK OFFICE
P.O. BOX 1450
ALEXANDRIA, VA 22313-1450
www.uspto.gov

Paper No. 9

John Cobb
1107 Carolyn Court
Shreveport, LA 71105

COPY MAILED

DEC 0 9 2003

OFFICE OF PETITIONS

In re Application of	:	
Cobb	:	
Application No. 10/366,760	:	Letter
Filed: February 14, 2003	:	
Attorney Docket No. 2322.67354	:	
For: BICYCLE FORK	:	

Dear Cobb:

You are named as the sole inventor in the above identified United States patent application, filed under the provisions of 35 U.S.C. 118 (United States Code), and 37 CFR 1.47(b), Rules of Practice in Patent Cases. Should a patent be granted on the application you will be designated therein as the sole inventor.

As a named inventor you are entitled to inspect any paper in the file wrapper of the application, order copies of all or any part thereof (at a prepaid cost per 37 CFR 1.19) or make your position of record in the application. Alternatively, you may arrange to do any of the preceding through a registered patent attorney or agent presenting written authorization from you. If you care to join the application, counsel of record (see below) would presumably assist you. Joining in the application would entail the filing of an appropriate oath or declaration by you pursuant to 37 CFR 1.63.

Requests for information regarding your application should be directed to the File Information Unit at (703) 308-2733. Information regarding how to pay for and order a copy of the application, or a specific paper in the application, should be directed to Certification Division at (703) 308-9726 or 1 (800) 972-6382 (outside the Washington D.C. area).

Telephone inquiries regarding this communication should be directed to Petitions Attorney Steven Brantley at (703) 306-5683.

Charles Steven Brantley
Petitions Attorney
Office of Petitions

cc: GREER, BURNS & CRAIN
300 S WACKER DR
25TH FLOOR
CHICAGO, IL 60606

UNITED STATES PATENT AND TRADEMARK OFFICE

UNITED STATES DEPARTMENT OF COMMERCE
United States Patent and Trademark Office
Address: COMMISSIONER FOR PATENTS
P.O. Box 1450
Alexandria, Virginia 22313-1450
www.uspto.gov

TOWNSEND AND TOWNSEND AND CREW LLP/ORACLE
TWO EMBARCADERO CENTER
8TH FLOOR
SAN FRANCISCO, CA 94111-3834

Mail Date: 04/21/2010

Applicant	: Philip B. Griffin	: DECISION ON REQUEST FOR
Patent Number	: 7653930	: RECALCULATION of PATENT
Issue Date	: 01/26/2010	: TERM ADJUSTMENT IN VIEW
Appliction No	: 10/366,778	: OF WYETH AND NOTICE OF INTENT TO
Filed	: 02/14/2003	: ISSUE CERTIFICATE OF CORRECTION
		:

The Request for Recalculation is **GRANTED** to the extent indicated.

The patent term adjustment has been determined to be **916** days. The USPTO will *sua sponte* issue a certificate of correction reflecting the amount of PTA days determined by the recalculation.

Prior to the issuance of the certificate of correction, the USPTO will afford patentee an opportunity to be heard and request reconsideration. Accordingly, patentee has **one month or thirty (30) days**, whichever is longer, to file a request for reconsideration of this patent term adjustment calculation. See 35 U.S.C. 154(b)(3)(B)(ii) and 37 CFR 1.322(a)(4). No extensions of time will be granted under 37 CFR 1.136.

Patentee should use document code PET.OP if electronically filing a request for reconsideration of this patent term adjustment calculation. The patentee must also include the information required by 37 CFR 1.705(b)(2) and the fee required by 37 CFR 1.18(e). If patentee does not file a timely request for reconsideration of this patent term adjustment calculation including the information required by 37 CFR 1.705(b)(2) and the fee required by 37 CFR 1.18(e), the USPTO will issue a certificate of correction reflecting the PTA determination noted above.

Patentee should be aware that in order to preserve the right to review in the United States District Court for the District of Columbia of the USPTO patent term adjustment determination, patentee must ensure that he or she also take the steps required under 35 U.S.C. 154(b)(4)(A) in a timely manner. Nothing in the request for recalculation should be construed as providing an alternative time frame for commencing a civil action under 35 U.S.C. 154(b)(4)(A).

Any questions concerning this decision should be directed to the Office of Patent Legal Administration at 571-272-7702.

UNITED STATES PATENT AND TRADEMARK OFFICE

COMMISSIONER FOR PATENTS
UNITED STATES PATENT AND TRADEMARK OFFICE
P.O. BOX 1450
ALEXANDRIA, VA 22313-1450
www.uspto.gov

Paper No. 10

SIEMENS CORPORATION
ATTN: ELSA KELLER, LEGAL ADMINISTRATOR
INTELLECTUAL PROPERTY DEPARTMENT
170 WOOD AVENUE SOUTH
ISELIN, NJ 08830

COPY MAILED

APR 0 9 2004

OFFICE OF PETITIONS

In re Application of
Scher et al.
Application No. 10/366,782
Filed: February 13, 2003
Attorney Docket No. 2002P02604US01

ON PETITION

This is a decision on the petition under 37 C.F.R. § 1.137(b), filed March 29, 2004, to revive the above-identified application.

The petition is **granted.**

The above-identified application became abandoned for failure to reply in a timely manner to the Notice to File Missing Parts of Application (Notice) mailed March 31, 2003. The Notice set a period for reply of two (2) months from the mail date of the Notice. No extensions of time under the provisions of 37 CFR 1.136(a) were obtained. Accordingly, the above-identified application became abandoned on June 1, 2003. A Notice of Abandonment was mailed on February 8, 2004.

Petitioner has met the requirements to revive the above-identified application pursuant to 37 CFR 1.137(b).

An extension of time under 37 CFR 1.136 must be filed prior to the expiration of the maximum extendable period for reply. See In re Application of S., 8 USPQ2d 1630, 1631 (Comm'r Pats. 1988). Accordingly, since the $110.00 extension of time fee submitted with the petition on March 29, 2004 was subsequent to the maximum extendable period for reply, this fee is unnecessary and will be credited to petitioner's deposit account as authorized.

The file is now being forwarded to the Office of Initial Patent Examination for further processing.

Telephone inquiries should be directed to the undersigned at (703) 306-0482.

Liana Chase
Petitions Examiner
Office of Petitions
Office of the Deputy Commissioner
for Patent Examination Policy

UNITED STATES PATENT AND TRADEMARK OFFICE

Commissioner for Patents
United States Patent and Trademark Office
P.O. Box 1450
Alexandria, VA 22313-1450
www.uspto.gov

AKA CHAN LLP / CISCO
900 LAFAYETTE STREET
SUITE 710
SANTA CLARA CA 95050

COPY MAILED

SEP 10 2007

OFFICE OF PETITIONS

In re Application of
Lu, et al.
Application No. 10/366,803
Filed: February 14, 2003
Docket No.: CISCP779

DECISION ON PETITION

This is a decision on the petition under 37 C.F.R. § 1.137(b), filed August 16, 2007, to revive the above-identified application.

The petition is **GRANTED**.

This application became abandoned April 5, 2007 for failure to timely reply to the non-final Office action mailed January 4, 2007. The non-final Office action set a three (3) month shortened statutory period of time for reply. No extensions of time in accordance with 37 C.F.R. § 1.136 were timely requested. This decision precedes Notice of Abandonment.

A grantable petition pursuant to 37 C.F.R. § 1.137(b) must be accompanied by: (1) the required reply to the outstanding Office action or notice, unless previously filed; (2) the petition fee as set forth in 37 C.F.R. § 1.17(m); (3) a statement that the entire delay in filing the required reply from the due date for the reply until the filing of a grantable petition pursuant to 37 C.F.R. § 1.137(b) was unintentional; and (4) any terminal disclaimer (and fee set forth in 37 C.F.R. § 1.20(d)) required pursuant to 37 C.F.R. § 1.137(c).

The instant petition has been reviewed and found in compliance with the provisions of 37 C.F.R. § 1.137(b). Accordingly, the failure to timely submit a proper reply to the non-final Office action is accepted as having been unintentionally delayed.

This application is being forwarded to Technology Center 2100 for further processing.

Telephone inquiries concerning this matter may be directed to the undersigned at (571) 272-3205.

Alesia M. Brown
Petitions Attorney
Office of Petitions

The opin[illegible]n [illegible]pport of the decision being entered today [illegible] not written for publication and is not binding precedent of the Board.

OIPE JC95 JUN 2 5 2003 PATENT & TRADEMARK OFFICE

Paper No. 19

UNITED STATES PATENT AND TRADEMARK OFFICE

BEFORE THE BOARD OF PATENT APPEALS AND INTERFERENCES

Ex parte JEAN-MARC PAYRAT,
CLAES F. HOGMAN,
JACK DEBRAUWERE, and
JEAN MARIE MATHIAS

MAILED
APR 3 0 2003
U.S. PATENT AND TRADEMARK OFFICE
BOARD OF PATENT APPEALS
AND INTERFERENCES

Appeal No. 2002-0090
Application No. 09/268,405

ON BRIEF[1]

Before WILLIAM F. SMITH, ADAMS and MILLS, Administrative Patent Judges.

ADAMS, Administrative Patent Judge.

DECISION ON APPEAL

This is a decision on the appeal under 35 U.S.C. § 134 from the examiner's final rejection of claims 37-43. The only other pending claims (claims 44 and 45) were withdrawn from consideration as drawn to a non-elected invention.

[1] We note that appellants waived their request for oral hearing. Accordingly, we considered this appeal on Brief.

Claim 37[2] is illustrative of the subject matter on appeal and is reproduced below:

37. An aqueous red blood cell storage solution comprising a first distinct solution and a second distinct solution wherein:

the first distinct solution consists essentially of sodium citrate, sodium diphosphate, sodium phosphate dibasic, adenine, and mannitol, the aqueous storage solution including a sufficient amount of sodium diphosphate and sodium phosphate dibasic so as to maintain, when combined with the second distinct solution, a 2,3 diphosphoglycerate concentration in the red cells stored at refrigeration temperatures to at least 80% of an initial concentration for at least 21 days; and

the second distinct solution consists essentially of at least one sugar chosen from the group consisting of dextrose and fructose.

The references relied upon by the examiner are:

Deindoerfer et al. (Deindoerfer)	3,874,384	Apr. 1, 1975
Meryman et al. (Meryman)	5,250,303	Oct. 5, 1993
European Patent Application: Carmen et al. (Carmen)	0 142 002	May 22, 1985

Costa de Oliveira et al. (Oliveira), "Thermal degradation products of sugars in alkaline pH," Chem. Abst., Abst. No. 96:177792 (1981)

Del Pilar Buera et al. (Buera), "Nonenzymatic browning in liquid model systems of high water activity: kinetics of color changes due to caramelization of various single sugars," Chem. Abst., Abst. No. 107:132797 (1987)

GROUND OF REJECTION

Claims 37-43 stand rejected under 35 U.S.C. § 103 as obvious over Meryman in view of Deindoerfer and any one of Buera, Oliveira or Carmen.

We affirm.

[2] We note the claim 37 was incorrectly reproduced in appellants' appendix of claims. Specifically, the word "at" was deleted prior to the words "least 80%."

CLAIM GROUPING

According to appellants (Brief, page 6), "[a]ppellants argue for the separate patentability of each of the independent claims separate and apart from each other set forth in detail below pursuant to the requirements of 37 C.F.R. § 1.192(7), unless otherwise specified." As set forth in 37 CFR § 1.192(7) (emphasis added):

> For each ground of rejection which appellant contests and which applies to a group of two or more claims, the Board shall select a single claim from the group and shall decide the appeal as to the ground of rejection on the basis of that claim alone unless a statement is included that the claims of the group do not stand or fall together and, in the argument under paragraph (c)(8) of this section, appellant explains why the claims of the group are believed to be separately patentable. Merely pointing out [the] differences in what the claims cover is not an argument as to why the claims are separately patentable.

While appellants have pointed out the differences in what the claims cover (Brief, pages 6-7), appellants provide no separate explanation as to why the claims of the group are believed to be separately patentable. At best, appellants note (Brief, page 10) that claims 37-40 and 43 are independent claims that require varying amounts of ingredients. However, rather than provide an argument regarding these limitations, appellants limit their argument to the requirement in each of the independent claims that the solution be "derived from two distinct or separate solutions or parts...." See e.g., Brief, pages 10 and 11. Accordingly, we interpret appellants' statement "unless otherwise specified" together with the lack of argument with regard to any individual claim to mean that the claims stand or fall together. Accordingly, we limit our discussion to

representative independent claim 37. Claims 38-43 will stand or fall together with claim 37. In re Dance, 160 F.3d 1339, 1340 n.2, 48 USPQ2d 1635, 1636 n.2 (Fed. Cir. 1998).

DISCUSSION

According to the examiner (Answer, page 5), Meryman discloses a red blood cell storage solution consisting of sodium citrate, sodium diphosphate, sodium phosphate dibasic, adenine, mannitol and glucose. The examiner finds (Answer, page 6), however, that Meryman does not divide the "components of the composition into two solutions...." To make up for this deficiency, the examiner finds with reference to Oliveira, Buera and Carmen that sugars such as dextrose degrade during heat sterilization. Id. Therefore, the examiner relies on Deindoerfer's disclosure of "the separation of a blood cell storage solution into two parts for purposes of heat sterilization." Id. According to the examiner (id.) Deindoerfer discloses a first solution "containing dextrose and DHA may be heat sterilized at acid pH, 3.8-4.2, while the remaining ingredients may be sterilized [as part of a second solution] at a higher pH than the dextrose, DHA components. The two solutions are mixed prior to use."

Based on this evidence the examiner finds (Answer, pages 6-7), since

> it is known to divide the components of a blood storage solution into two solutions prior to heat sterilization in order to have solutions with distinct pHs which can stabilize heat labile components prior to autoclaving .... The division of the blood storage solution disclosed in ... [Meryman] into two parts, one of which contains the components other than glucose and one which contains glucose, would have been [prima facie] obvious [to a person of ordinary skill in the art at the time the invention was made].

In response, appellants argue (Brief, page 11), "[a]ppellants have demonstrated that storage solutions embodying the aqueous red blood cell storage solution of the present invention have maintained the concentration of 2,3-BPG [sic] in the red blood cells at about 80 to about 110% of the initial concentration after 21 days." However, as the examiner points out (Answer, pages 10-11), "no comparison has been made or argued with the prior art solutions of ... [Meryman] which have all of the claimed components in the claimed ranges of concentration in various red blood cell storage solutions disclosed in Table 2 and in the examples."

As set forth in In re Freeman, 474 F.2d 1318, 1324, 177 USPQ 139, 143 (CCPA 1973):

> In order for a showing of "unexpected results" to be probative evidence of non-obviousness, it falls upon the applicant to at least establish: (1) that there actually is a difference between the results obtained through the claimed invention and those of the prior art; and (2) that the difference actually obtained would not have been expected by one skilled in the art at the time of the invention.

In this regard, we note that Meryman discloses (column 4, lines 13-20):

> This invention significantly improves the procedure for storing red blood cells ... by providing method that lead to reduction or elimination of adenine from the storage solution, improvement of red cell morphology, reduction of hemolysis, increases in the intracellular levels of ATP and 2,3 DPG and maintenance of said levels at or above physiological concentrations for extended period of time.

According to Meryman (column 7, lines 11-13), "[t]he terms are meant to apply to storage periods of about or greater than 30-60 days, in most cases greater than 90, or even greater than 120-160 days." For emphasis, we note that figure 5 of

Meryman illustrates that 2,3 DPG is maintained at levels above the initial value for at least 4 weeks, using ARC8. While ARC8 does not contain mannitol (see Meryman, column 8, Table 2), as the examiner points out, there is no evidence of record to demonstrate that similar results would not be expected to have been obtained with the use of ARC30 (see id.) which contains mannitol.

Appellants also argue (Brief, page 11) that Meryman teaches away from the separation of a blood storage solution into two distinct solutions:

> Meryman fails to disclose a red blood cell storage solution that contains distinct and separate solution components as required by the independent claims. What Meryman clearly emphasizes is to adjust the pH level of a solution and not to provide a solution that has physically distinct and separate solution components in order to increase the storage capability of the solution. ... In this regard, Meryman clearly teaches away from the two distinct and separate solution component features of the aqueous red blood cell storage solution as required by the independent claims. [Emphasis removed].

In response, the examiner argues (Answer, page 11), Meryman "does not teach away from the division of a red blood cell solution into two or more distinct solutions. The reference is merely silent with respect to this element. Silence is not synonymous with 'teaching away'...."

In addition, appellants do not point out, and we do not find, any description in Meryman of a sterilization method. Therefore, a person of ordinary skill in the art would be expected to follow art-recognized methods of sterilization. In this regard, we note that Deindoerfer teach filter sterilization is more difficult and expensive than heat sterilization. Deindoerfer, column 5, lines 28-34. As the examiner explains (Answer, page 9), Deindoerfer discloses an alternative to

filter sterilization, wherein "heat sterilization of components of the [blood storage] solution which are labile during heat sterilization of the complete solution may be performed by division of the solution to permit separate pH control of the separated solutions prior to heating." Note, for example, that Buera teaches "[l]owering of pH inhibited caramelization browning [degradation] of sugar solns" during heat treatment, thus a sugar (dextrose) solution is just the kind of heat labile component that according to Deindoerfer should be separately sterilized.

In this regard, we recognize that Meryman discloses (column 7, line 68 to column 8, line 5) that "[e]xamples of biologically compatible buffered solution[s] that raise the intracellular pH of a red blood cell, which are used in accordance with this invention, include ... solutions that contain substantially no chloride ion and that have a pH between 5 and 9.0, generally between 7.4 and 7.5." However, given the recognition that glucose solutions of alkaline pH degrade when heat sterilized, we agree with the examiner (Answer, page 9) that a person of ordinary skill in the art would have been motivated to use the sterilization method set forth by Deindoerfer to heat sterilize the blood storage solution as opposed to the more difficult and expensive filter sterilization methodology known to those of ordinary skill in the art.

Accordingly, we agree with the examiner (Answer, page 12), Deindoerfer "generically teach division of blood storage solutions into two solutions in order to permit separate pH control for heat sterilization.... Thus, the separation of components in a blood preservative solution prior to heat sterilization to permit maintenance of the solutions at distinct pHs, where there are heat labile

components is clearly taught." "The test for obviousness is not express suggestion of the claimed invention in any or all of the references but rather what the references taken collectively would suggest to those of ordinary skill in the art presumed to be familiar with them." In re Rosselet, 347 F. 2d, 847, 851, 146 USPQ 183, 186 (CCPA 1965).

For the foregoing reasons, we are not persuaded by appellants' argument (Brief, page 15) that there is no motivation to combine the references. Furthermore, we are not persuaded by appellants' argument that it would have been "obvious to try" separating blood storage solutions into two separate solutions. As discussed above, Deindoerfer teaches the separation of a blood storage solution into two separate solutions to facilitate sterilization. Appellants have offered no explanation as to why a person of ordinary skill in the art would not have had a reasonable expectation of success in separating the Meryman solution into two separate solutions to facilitate sterilization, while avoiding degradation of the glucose component.

Therefore, it is our opinion that the examiner provided the evidence necessary to meet her burden[3] of establishing a prima facie case of obviousness. As a result, the burden of coming forward with evidence or argument was properly shifted to the appellants. In re Rijckaert, 9 F.3d 1531, 1532, 28 USPQ2d 1955, 1956 (Fed. Cir. 1993). In our opinion appellants failed to meet their burden. Accordingly, we affirm the rejection of claim 37 under 35 U.S.C. §

[3] The initial burden of presenting a prima facie case of obviousness rests on the examiner. In re Oetiker, 977 F.2d 1443, 1445, 24 USPQ2d 1443, 1444 (Fed. Cir. 1992).

103 as obvious over Meryman in view of Deindoerfer and any one of Buera, Oliveira or Carmen. As discussed supra claims 38-43 fall together with claim 37.

No time period for taking any subsequent action in connection with this appeal may be extended under 37 CFR § 1.136(a).

AFFIRMED

William F. Smith Administrative Patent Judge	)
Donald E. Adams Administrative Patent Judge	) BOARD OF PATENT) APPEALS AND) INTERFERENCES
Demetra J. Mills Administrative Patent Judge	)

Denise M. Serewicz
Baxter International Inc.
Rt. 120 and Wilson Road
Round Lake, IL 60073

DEA/jlb

NOTICE

Board of Patent Appeals and Interferences Mail
Effective May 1, 2003

Appeals

All correspondence in an application involved in an appeal to the Board of Patent Appeals and Interferences during the period from when an appeal docketing notice is issued until a decision has been rendered by the Board of Patent Appeals and Interferences as well as any hearing confirmations, waivers and requests for rehearing of a decision by the Board of Patent Appeals and Interferences should be mailed to:

Board of Patent Appeals and Interferences
United States Patent and Trademark Office
P.O. Box 1450
Alexandria, Virginia 22313-1450

Notices of appeal, appeal briefs, reply briefs, requests for oral hearing should be addressed to:

Commissioner for Patents
P.O. Box 1450
Alexandria, VA 22313-1450

Interferences

All mail to the Board relating to patent interferences should be sent to the following address unless an administrative patent judge or the Board specifically requires the use of a different address after May 1, 2003:

Mail Stop INTERFERENCE
Board of Patent Appeals and Interferences
United States Patent and Trademark Office
P.O. Box 1450
Alexandria, Virginia 22313-1450

Any inquiries regarding the content of this notice should be directed to a Program and Resources Administrator of the Board of Patent Appeals and Interferences at (703) 308-9797.

OIPE JC95
JUN 2 5 2003
PATENT & TRADEMARK OFFICE

Art Unit 1808

Paper No. 21

Appeal No. 93-3239

MTC

FED 2 9 1994

HEARD:
October 12, 1993

UNITED STATES PATENT AND TRADEMARK OFFICE

BEFORE THE BOARD OF PATENT APPEALS
AND INTERFERENCES

Ex parte Jean-Marc Payrat,
Claes F. Hogman, Jack DeBrauwere
and Jean M. Mathias

Application for Patent filed November 7, 1990, Serial No. 610,478. Red Blood Cell Storage Solution.

Robert M. Barrett et al. for Appellants.

Supervisory Primary Examiner - Douglas W. Robinson.
Examiner - S. Saucier.

Before Seidleck, Tarring and Emery, Administrative Patent Judges.

Seidleck, Administrative Patent Judge.

This appeal involves claims 1, 3-22 and 36. Claims 23-35, the only other claims remaining in the case, stand withdrawn from consideration under the provisions of 37 CFR 1.142.

A copy of illustrative claims 1 and 9 is attached to this opinion as an appendix.

CASE F-4066 US
DKT DAT 3-28-94 SEEN BY ATTY BRA
FINAL DAT 3-28-94 RESP SENT BRA
SUBJECT Request for Reconsideration

CASE F-4066 US
DKT. DATE 4-28-94 SEEN BY ATTY BRA
FINAL DATE 4-28-94 RESP SENT BRA
SUBJECT File Appeal w/ CAFC

The examiner has relied upon the following references in his answer:

Deindoerfer et al. (Deindoerfer)	3,874,384	Apr. 1, 1975
Walker et al. (Walker)	4,572,899	Feb. 25, 1986

Meryman et al. (Meryman), *Transfusion*, Vol. 26, No. 6, "Prolonged Storage Of Red Cells At 40°C," pp. 500-505, 1986.

At the outset we note that the appealed claims have been separately argued as two groups. More particularly, claims 1, 3-8 and 18-22 have been argued as one group while claims 9-17 and 36, drawn to an aqueous red blood cell storage medium comprising two distinct solutions, are separately argued as a second group. The examiner, notwithstanding the statement appearing at the top of page 2 of the answer, appears to recognize that the claims have been argued as two separate groups in view of the fact that he has advanced a separate rejection as to the claims of the second group. We note, however, that appellants have not separately argued the claims in each of the aforementioned groups. As such, the claims in each of the groups are deemed to stand or fall together. In treating the examiner's rejections, we will thus limit our discussion to claims 1 and 36 which appear to be the broadest claims of the first and second groups respectively.

Claims 1, 3-8 and 18-22 stand rejected under 35 USC §103 as unpatentable over Meryman in view of Walker.

We shall sustain this rejection.

Claim 1, in essence, is directed to a sodium chloride-free aqueous red blood cell storage solution, for use with an anticoagulant containing less than or equal to 50% citrate as compared to a typical CPD solution, having a pH of approximately 7.4 and an osmolarity of less than 300 mOsm/1 and comprising sodium citrate, sodium biphosphate, sodium phosphate dibasic, adenine and mannitol.

Meryman, as correctly observed by the examiner, discloses sodium chloride-free red blood cell storage solutions having a pH of 7.1 and an osmolarity of 210 mOsm containing a citrate, a monophosphate, a diphosphate, adenine, mannitol and dextrose. We note that appellants have not put into issue the accuracy of the examiner's analysis of the Meryman reference.

The claimed composition, more particularly the composition of claim 1, differs, if at all, from the red blood cell storage solution taught by Meryman, only in the pH of the solution and by virtue of the fact Meryman teaches potassium salts whereas the present claims are drawn to sodium salts, note the examiner's analysis of the differences between the claimed solutions (claim 1) and those taught by Meryman at the top of page 4 of his answer. However, we agree with the examiner that the salts and pH values taught by Meryman render the claimed pH value of "approximately 7.4" and the use of sodium salts *prima facie* obvious.

More particularly, we agree with the examiner's position, as set forth at page 4 of his answer, that it is conventional to utilize the sodium and potassium salt forms interchangeably in the preparation of aqueous solutions. We also note that appellants apparently acquiesce in the examiner's determination since they have not presented any arguments to the contrary.

With respect to the pH of the solution, we are satisfied that the determination of an optimum pH level amounts to nothing more than routine experimentation well within the ordinary skill of the art. Further, the recitation "a pH of approximately 7.4" is, in our opinion, broad enough to include the 7.1 pH taught by Meryman. ***In re Ayers***, 154 F.2d 182, 69 USPQ 109 (CCPA 1946) and *Ex parte Bachlott*, 1961 C.D. 100. Still further, the recited pH value of "approximately 7.4" is so close to that of the 7.1 value taught by Meryman as to be rendered obvious thereby. ***Titanium Metals Corp. of America v. Banner***, 778 F.2d 687, 227 USPQ 773 (Fed. Cir. 1985). ***In re Kirsch***, 498 F.2d 1389, 182 USPQ 286 (CCPA 1974).

Appellants argue that Meryman does not render the claimed aqueous solutions *prima facie* obvious since there is nothing in the reference which teaches or suggests that the aqueous solutions described therein are useful in conjunction with an anticoagulant containing less than or equal to 50%

citrate as compared to a typical CPD solution. However, this argument is not convincing of error in the examiner's position since it is well settled that terms merely setting forth an intended use for, or a property inherent in, an otherwise old composition, do not differentiate the claimed composition from those known in the prior art. ***In re Pearson***, 494 F.2d 1399, 181 USPQ 641 (CCPA 1974). ***In re Lemin***, 326 F.2d 437, 140 USPQ 273 (CCPA 1964). Further, there is no evidence in the record establishing that the aqueous red blood storage solutions taught by Meryman are not capable of being used in conjunction with an anticoagulant containing less than 50% citrate as compared to typical CPD solutions.

Appellants argue that their red blood cell storage solutions must differ from those of Meryman by virtue of the fact that, unlike Meryman, washing of the red blood prior to storage is unnecessary. This argument does not convince us of error in the examiner's position.

We initially note the absence of any specific teaching in the instant specification to the effect that the claimed solutions are advantageous over those of the prior art since they eliminate the need to wash the blood cells prior to storage. The reliance upon advantages not disclosed in the specification is contrary to prevailing patent jurisprudence. ***In re Davies***, 475

F.2d 667, 177 USPQ 381 (CCPA 1973); *In re Slocombe*, 510 F.2d 1398, 184 USPQ 740 (CCPA 1975).

Further, we fail to see where the presence or absence of a washing step during use provides adequate support from appellants' contention that the broadly claimed solutions are materially different from those taught by Meryman. Since the claimed solutions and those of Meryman comprise essentially the same materials, it is reasonable to expect that they possess essentially the same properties. We find no persuasive objective evidence in the record to the contrary.

Claims 9-17 and 36 stand rejected under 35 USC §103 as unpatentable over the combined teachings of Meryman, Walker and Deindoerfer. We shall sustain this rejection for the reasons set forth by the examiner.

Claim 36 differs from claim 1 by virtue of the fact that the solution is claimed as a two part aqueous red blood cell storage solution, one part including the phosphates, adenine and mannitol and the second part containing the sugar such as fructose or dextrose.

As pointed out by the examiner at pages 5, 6 and 8 of his answer, Deindoerfer clearly teaches dividing blood cell storage solutions into two parts, one part containing the sugar and the second part containing adenine, citrate, etc. Patentee also points out that it is advantageous to so divide the blood

storage solutions in order to stabilize the components of the storage medium. These teachings in Deindoerfer would, in our opinion, provide ample motivation for dividing the solutions of Meryman into two parts with one of the parts containing the sugar. The results achieved herein by initially maintaining the sugar solution as a separate part are those ordinarily expected from the teachings in Deindoerfer.

The decision of the examiner is affirmed.

No time period for taking any subsequent action in connection with this appeal may be extended under 37 CFR 1.136(a). See the final rule notice, 54 F.R. 29548 (July 13, 1989), 1105 O.G. 5 (August 1, 1989).

AFFIRMED.

James A. Seidleck
Administrative Patent Judge)
)
Henry W. Tarring, II
Administrative Patent Judge)
)
Stephen J. Emery
Administrative Patent Judge)

BOARD OF PATENT APPEALS AND INTERFERENCES

Hill, Van Santen, Steadman & Simpson
A Professional Corporation
85th Floor - Sears Tower
Chicago, IL 60606

APPENDIX

1. An aqueous red blood cell storage solution for maintaining 2,3-BPG and for use with an anticoagulant containing less than or equal to 50% citrate as compared to a typical CPD solution comprising sodium citrate, sodium biphosphate, sodium phosphate dibasic, adenine, and mannitol but not including sodium chloride, and having a pH of approximately 7.4 and an osmolarity of less than 300 mOsm/l.

9. An aqueous red blood cell storage solution for maintaining 2,3-BPG and for use with an anticoagulant containing less than or equal to 50% citrate as compared to a typical CPD solution comprising a first distinct solution and a second distinct solution wherein neither solution includes sodium chloride, and wherein:

the first solution includes in millimolar concentration (mmol/l) approximately 20 mmol/l to about 140 mmol/l of at least one sugar chosen from the group consisting of dextrose and fructose;

the second solution includes in millimolar concentrations;

approximately 1 mmol/l to about 2.2 mmol/l adenine;

approximately 20 mmol/l to about 110 mmol/l mannitol;

approximately 2.2 mmol/l to about 90 mmol/l sodium citrate;

approximately 1 mmol/l to about 10 mmol/l sodium biphosphate;

approximately 5 mmol/l to about 25 mmol/l sodium phosphate dibasic; and

approximately 0 mmol/l to about 2 mmol/l guanosine.

UNITED STATES PATENT AND TRADEMARK OFFICE

Commissioner for Patents
United States Patent and Trademark Office
P.O. Box 1450
Alexandria, VA 22313-1450
www.uspto.gov

BANNER & WITCOFF
1001 G STREET N W
SUITE 1100
WASHINGTON, DC 20001

COPY MAILED

JUL 27 2005

OFFICE OF PETITIONS

In re Application of	:	
Perkins, et al.	:	DECISION ON PETITION
Application No. 10/366,812	:	UNDER 37 CFR 1.78(a)(3) AND
Filed: February 13, 2003	:	UNDER 37 CFR 1.78(a)(6)
Attorney Docket No. A-70622-3/ESW	:	

This is a decision on the petitions under 37 CFR §§ 1.78(a)(3) and 1.78(a)(6), filed May 18, 2005, to accept an unintentionally delayed claim under 35 U.S.C. §§120, 365(c) and 119(e) for the benefit of the prior-filed applications set forth in the concurrently filed amendment.

The petition is **GRANTED**.

A petition for acceptance of a claim for late priority under 37 CFR §§ 1.78(a)(3) and 1.78(a)(6) is only applicable to those applications filed on or after November 29, 2000. Further, the petition is appropriate only after the expiration of the period specified in 37 CFR §§ 1.78(a)(2)(ii) and 1.78(a)(5)(ii). In addition, the petition under 37 CFR §§ 1.78(a)(3) and 1.78(a)(6) must be accompanied by:

(1) the reference required by 35 U.S.C. §§ 120 and 119(e) and 37 CFR §§ 1.78(a)(2)(i) and 1.78(a)(5)(i) of the prior-filed application, unless previously submitted;
(2) the surcharge set forth in § 1.17(t); and
(3) a statement that the entire delay between the date the claim was due under 37 CFR §§ 1.78(a)(2)(ii) and 1.78(a)(5)(ii) and the date the claim was filed was unintentional. The Commissioner may require additional information where there is a question whether the delay was unintentional.

The instant nonprovisional application was filed after November 29, 2000, and the claim herein for the benefit of priority to the prior-filed applications is submitted after expiration of the period specified in 37 CFR §§ 1.78(a)(2)(ii) and 1.78(a)(5)(ii). Therefore, this is a proper petition under 37 CFR §§ 1.78(a)(3) and 1.78(a)(6).

The petition complies with the requirements for a grantable petition under 37 CFR §§1.78(a)(3) and 1.78(a)(6) in that (1) a reference to the prior-filed applications has been included in an amendment to the first sentence of the specification following the title as provided by 37 CFR §§ 1.78(a)(2)(iii) and 1.78(a)(5)(iii); (2) the surcharge fee required by 37 CFR 1.17(t) has been submitted; and (3) the petition contains a proper statement of unintentional delay. Accordingly, having found that the instant petition for acceptance of an unintentionally delayed claim for the benefit of priority under 35 U.S.C. §§ 120, 365(c) and 119(e) to the prior-filed applications satisfies the conditions of 37 CFR §§ 1.78(a)(3) and 1.78(a)(6), the petition is granted.

The granting of the petition to accept the delayed benefit claim to the prior-filed applications under 37 CFR §§ 1.78(a)(3) and 1.78(a)(6) should not be construed as meaning that the instant application is entitled to the benefit of the filing date of the prior-filed applications. In order for the instant application to be entitled to the benefit of the prior-filed applications, all other requirements under 35 U.S.C. §§120 and 365(c) and 37 CFR 1.78(a)(1) and (a)(2) and under 35 U.S.C. §119(e) and 37 CFR 1.78(a)(4) and (a)(5) must be met. Similarly, the fact that the corrected Filing Receipt accompanying this decision on petition includes the prior-filed applications should not be construed as meaning that applicant is entitled to the claim for benefit of priority to the prior-filed applications noted thereon. Accordingly, the examiner will, in due course, consider this benefit claim and determine whether the instant application is entitled to the benefit of the earlier filing date.

A corrected Filing Receipt, which includes the priority claim to the prior-filed applications, accompanies this decision on petition.

Any inquiries concerning this decision may be directed to the Petitions Attorney Edward Tannouse at (571) 272-3228. All other inquiries concerning either the examination procedures or status of the application should be directed to the Technology Center.

This application is being forwarded to Technology Center Art Unit 1772 for appropriate action on the amendment filed May 18, 2005, including consideration by the examiner of the claim under 35 U.S.C. § §120 and 365(c) and 37 CFR 1.78(a)(2) for the benefit of the prior-filed applications, and for consideration of the claim under 35 U.S.C. §119(e) and 37 CFR 1.78(a)(5) for the benefit of the prior-filed provisional application.

Francis Hicks

Francis Hicks
Petitions Examiner
Office of Petitions
United States Patent and Trademark Office

ATTACHMENT: Corrected Filing Receipt

UNITED STATES PATENT AND TRADEMARK OFFICE

Commissioner for Patents
United States Patent and Trademark Office
P.O. Box 1450
Alexandria, VA 22313-1450
www.uspto.gov

MORRISON & FOERSTER LLP
425 MARKET STREET
SAN FRANCISCO CA 94105-2482

COPY MAILED

APR 0 5 2006

OFFICE OF PETITIONS

In re Application of	:	
Gannoe et al.	:	DECISION ON PETITION
Application No. 10/366,818	:	TO WITHDRAW
Filed: February 13, 2003	:	FROM RECORD
Attorney Docket No. 514362000520	:	

This is a decision on the Request to Withdraw as attorney or agent of record under 37 C.F.R.§ 1.36(b), filed August 4, 2004.

The request is **APPROVED**.

A grantable request to withdraw as attorney/agent of record must be signed by every attorney/agent seeking to withdraw or contain a clear indication that one attorney is signing on behalf of another/others. A request to withdraw will not be approved unless at least 30 (thirty) days would remain between the date of approval and the later of the expiration date of a time to file a response or the expiration date of the maximum time period which can be extended under 37 C.F.R. § 1.136(a).

The request was signed by Mika Mayer on behalf of all attorneys/agents of record.

All attorneys/agents have been withdrawn. Applicant is reminded that there is no attorney of record at this time.

The correspondence address of record has been changed and the new correspondence address is the address indicated below.

This matter is being referred to Technology Center 3700 for further examination on the merits.

Telephone inquires concerning this decision should be directed to Petitions Examiner Liana Chase at (571) 272-3206. All other inquires concerning either the examination or status of the application should be directed to the Technology Center.

David Bucci
Petitions Examiner
Office of Petitions

Cc: JOHN S. NAGY
HOWARD HUGHES CENTER
6060 CENTER DRIVE, TENTH FLOOR
LOS ANGELES, CA 90045

UNITED STATES PATENT AND TRADEMARK OFFICE

COMMISSIONER FOR PATENTS
UNITED STATES PATENT AND TRADEMARK OFFICE
P.O. BOX 1450
ALEXANDRIA, VA 22313-1450
www.uspto.gov

JOHN S. NAGY
FULWIDER, PATTON, LEE & UTECHT, LLP
HOWARD HUGHES CENTER
6060 CENTER DRIVE, 10TH FLOOR
LOS ANGELES CA 90045

COPY MAILED

MAR 05 2007

OFFICE OF PETITIONS

In re Application of	:	
Gannoe, et al.	:	
Application No. 10/366,818	:	DECISION ON PETITION
Filed: February 13, 2003	:	
Attorney Docket No. SATTY-69230	:	

This is a decision on the petition filed January 16, 2007 (certificate of mailing date January 9, 2007), requesting under 37 CFR 1.182 that the acceptance of the terminal disclaimer filed May 15, 2006 (certificate of mailing date May 12, 2006) be withdrawn The $400.00 petition fee has been received.

The petition is granted.

Petitioners assert that, as the claims for which the aforementioned terminal disclaimer was originally proffered have now been cancelled to remove the basis for the previous obviousness-type double patenting rejection, there is no further need for the disclaimer to remain recorded against this application. The undersigned has consulted with the examiner in charge of this application, and has found that the examiner concurs with petitioners' assertion. Accordingly, the terminal disclaimer is withdrawn. USPTO records for the above-identified application have been changed consistent with this decision.

After the mailing of this decision, the application will be forwarded to Publications Division to await receipt of the issue fee, publication fee, and a completed PTOL-85(B).

Telephone inquiries related to this decision should be addressed to the undersigned at (571) – 272-3230.

Shirene Willis Brantley

Shirene Willis Brantley
Senior Petitions Attorney
Office of Petitions

UNITED STATES PATENT AND TRADEMARK OFFICE

Commissioner for Patents
United States Patent and Trademark Office
P.O. Box 1450
Alexandria, VA 22313-1450
www.uspto.gov

1/11/2008

SALIWANCHIK LLOYD & SALIWANCHIK
A PROFESSIONAL ASSOCIATION
PO BOX 142950
GAINESVILLE FL 32614-2950

In re Application of:
DAUM, WOLFGANG et al
Serial No.: 10/366,831
Filed: Feb. 14, 2003
Docket: MRI-125XC1
Title: METHOD AND APPARATUS FOR MR-GUIDED BIOPSY

DECISION ON PETITION

This is a decision on the petition for suspension of prosecution under 37 CFR § 1.103(c) filed on Oct. 31, 2007.

The petition is **GRANTED**.

Pursuant to applicant's request filed on Oct. 31, 2007, action by the Office is suspended on this application under 37 CFR § 1.103(c) for a period of three (3) months from the date of the petition. At the end of this period, applicant is required to notify the examiner and request continuance of prosecution or a further suspension. See MPEP § 709.

Suspension of action under 37 CFR § 1.103(a)-(d) at the applicant's request will cause a reduction in patent term adjustment accumulated (if any) under 37 CFR § 1.703. The reduction is equal to the number of days beginning on the date a request for suspension of action was filed and ending on the date of the termination of the suspension. See 37 CFR § 1.704(c)(1).

Any inquiry concerning this decision should be directed to Henry C. Yuen, Special Programs Examiner, whose telephone number is (571) 272-4856.

Frederick R. Schmidt, Director
Technology Center 3700

UNITED STATES PATENT AND TRADEMARK OFFICE

Commissioner for Patents
United States Patent and Trademark Office
P.O. Box 1450
Alexandria, VA 22313-1450
www.uspto.gov

NOV 5 2004

AKERMAN SENTERFITT
P.O. BOX 3188
WEST PALM BEACH FL 33402-3188

In re Application of	:
Charles Fox et al	:
Serial No.: 10/366,845	: PETITION TO MAKE SPECIAL
Filed: February 14, 2003	:
Attorney Docket No.: 6619-107	:

This is in response to applicants' petition filed March 8, 2004, to make the above-identified application special under the provisions of 37 CFR 1.102(c), based on the age of the applicant. The delay in acting on this petition was regretted.

Applicant has satisfied the provisions set forth in M.P.E.P. 708.02, IV. Therefor the petition is **GRANTED**.

The application will be forwarded to the examiner for action on the merits commensurate with this decision.

Should there be any questions with regard to this letter please contact William R. Dixon, Jr. by letter addressed to the Director, Technology Center 1600, PO BOX 1450, ALEXANDRIA, VA 22313-1450, or by telephone at 571-272-0519 or by facsimile transmission to the general Office facsimile number.

William R. Dixon, Jr.
Special Program Examiner
Technology Center 1600

UNITED STATES PATENT AND TRADEMARK OFFICE

COMMISSIONER FOR PATENTS
UNITED STATES PATENT AND TRADEMARK OFFICE
P.O. BOX 1450
ALEXANDRIA, VA 22313-1450
www.uspto.gov

Paper No.

BRINKS HOFER GILSON & LIONE
/ YAHOO! OVERTURE
P.O. BOX 10395
CHICAGO IL 60610

COPY MAILED
MAR 3 1 2008

In re Application No. 10/366,853 :
McElfresh et al. : LETTER REGARDING
Application No. 10/366,853 : PATENT TERM ADJUSTMENT
Filed: February 14, 2003 :
Attorney Docket No. 9623/566 :

This is in response to the "REQUEST FOR REVIEW OF PATENT TERM ADJUSTMENT," filed December 3, 2007. Applicants disclose that the patent term adjustment indicated in the notice of allowance may extend the term of the patent by too many days.

The request for review of the patent term adjustment is **GRANTED**.

The Office has updated the PAIR screen to reflect that the correct Patent Term Adjustment (PTA) determination at the time of the mailing of the Notice of Allowance is three hundred fifty-three **(353)** days. A copy of the updated PAIR screen, showing the correct determination, is enclosed.

On October 10, 2007, the Office mailed the Determination of Patent Term Adjustment under 35 U.S.C. 154(b) in the above-identified application. The Notice stated that the patent term adjustment to date is 508 days. Applicants state no basis for their disclosure that the patent term adjustment may extend the patent by too many days.

Nonetheless, a review of the application history confirms an error. The patent term adjustment at the time of the mailing of the notice of allowance does not consider that the appeal brief filed March 9, 2007 was defective. Pursuant to 37 CFR 1.704(c)(7), an additional period of reduction of 77 days should have been entered. 37 C.F.R. §1.704(c)(7) provides that a period of reduction is entered for:

> Submission of a reply having an omission (§1.135(c)), in which case the period of adjustment set forth in § 1.703 shall be reduced by the number of days, if any, beginning on the day after the date the reply having an omission was filed and ending on the date that the reply or other paper correcting the omission was filed.

In this instance, a first appeal brief was filed on March 9, 2007. By Notice mailed April 30, 2007, applicants were advised that the Appeal Brief was defective. On May 25, 2007, applicants filed an appeal brief, which cured the omission. Thus, the period of reduction is 77 days counting the number of days in the period beginning on March 10, 2007, the day after the defective appeal brief was filed, and ending on May 25, 2007, the date that the corrected appeal brief was filed. (It is noted that a subsequent Notice of Defective Appeal Brief mailed July 6, 2007 was withdrawn).

Moreover, given that an appeal brief in compliance was not filed until May 25, 2007, the period of adjustment for Office delay in responding with the mailing of a Notice of Allowance on October 10, 2007 is not 93 days. Rather, the period of adjustment is 15 days. Pursuant to 37 CFR 1.703(a)(4), the period is the number of days in the period beginning on the day after the date that is four months after the date an appeal brief in compliance with § 1.192 was filed, September 26, 2007, and ending on the date of mailing of a notice of allowance under 35 U.S.C. 151, October 10, 2007.

In view thereof, the patent term adjustment at the time of the mailing of the notice of allowance is three hundred fifty-three (353) days.

As this letter was submitted as an advisement to the Office of an error in applicants' favor, the Office will not assess the $200.00 fee under 37 CFR 1.18(e). The Office thanks applicants for their good faith and candor in bringing this to the attention of the Office.

The application is being forwarded to the Publications Division for issuance of a patent. The patent term adjustment indicated on the patent (as shown on the Issue Notification mailed about three weeks prior to patent issuance) will include any additional adjustment accrued both for Office delay in issuing the patent more than four months after payment of the issue fee

and satisfaction of all outstanding requirements, and for the Office taking in excess of three years to issue the patent (to the extent that the three-year period does not overlap with periods already accorded).

Telephone inquiries specific to this matter should be directed to the undersigned at (571) 272-3219.

Nancy Johnson
Senior Petitions Attorney
Office of Petitions

Enclosure: Copy of REVISED PALM Screen

Day : Monday
Date: 3/31/2008

PALM INTRANET

Time: 09:56:45

PTA Calculations for Application: 10/366853			
Application Filing Date:	02/14/2003	PTO Delay (PTO):	508
Issue Date of Patent:		Three Years:	0
Pre-Issue Petitions:	0	Applicant Delay (APPL):	0
Post-Issue Petitions:	0	Total PTA (days):	353
PTO Delay Adjustment:	-155		

File Contents History

Number	Date	Contents Description	PTO	APPL	START
79	03/31/2008	ADJUSTMENT OF PTA CALCULATION BY PTO	15		
78	03/31/2008	ADJUSTMENT OF PTA CALCULATION BY PTO		93	
77	03/31/2008	ADJUSTMENT OF PTA CALCULATION BY PTO		77	
69	10/10/2007	MAIL NOTICE OF ALLOWANCE	93		48
68	10/10/2007	MAIL EXAMINER'S AMENDMENT			
67	10/03/2007	ISSUE REVISION COMPLETED			
66	09/28/2007	ALLOWED CASE RETURNED TO THE EXAMINER FOR CLERICAL PROCESSING			
65	09/28/2007	DOCUMENT VERIFICATION			
64	09/28/2007	NOTICE OF ALLOWANCE DATA VERIFICATION COMPLETED			
63	09/28/2007	CASE DOCKETED TO EXAMINER IN GAU			
62	09/27/2007	EXAMINER'S AMENDMENT COMMUNICATION			
61	09/27/2007	NOTICE OF ALLOWABILITY			
60	09/24/2007	EXAMINER INTERVIEW SUMMARY RECORD (PTOL - 413)			
59	07/19/2007	DATE FORWARDED TO EXAMINER			
58	05/25/2007	APPEAL BRIEF FILED			
57	07/19/2007	MAIL OF WITRHDRAW OF INFORMAL AMENDMENT NOTICE			
56	07/19/2007	WITHDRAW OF INFORMAL AMENDMENT NOTICE			
55	07/06/2007	NOTICE -- DEFECTIVE APPEAL BRIEF			
54	06/28/2007	APPEAL BRIEF REVIEW COMPLETE			
53	06/28/2007	DATE FORWARDED TO EXAMINER			
52.1	05/25/2007	DEFECTIVE / INCOMPLETE APPEAL BRIEF FILED			
52	05/25/2007	APPEAL BRIEF FILED			

51	04/30/2007	NOTICE -- DEFECTIVE APPEAL BRIEF			
50	04/26/2007	APPEAL BRIEF REVIEW COMPLETE			
49	04/26/2007	DATE FORWARDED TO EXAMINER			
48.1	03/09/2007	DEFECTIVE / INCOMPLETE APPEAL BRIEF FILED			
48	03/09/2007	APPEAL BRIEF FILED			
47	03/09/2007	REQUEST FOR EXTENSION OF TIME - GRANTED			
46	01/11/2007	MAIL APPEALS CONF. PROCEED TO BPAI			
45	01/08/2007	PRE-APPEALS CONFERENCE DECISION - PROCEED TO BPAI			
44	11/24/2006	REQUEST FOR PRE-APPEAL CONFERENCE FILED			
43	11/24/2006	NOTICE OF APPEAL FILED			
42	10/11/2006	MAIL FINAL REJECTION (PTOL - 326)			
41	09/18/2006	FINAL REJECTION			
40	07/03/2006	INFORMATION DISCLOSURE STATEMENT CONSIDERED			
39	07/26/2006	CASE DOCKETED TO EXAMINER IN GAU			
38.7	07/03/2006	INFORMATION DISCLOSURE STATEMENT (IDS) FILED		0	36
38	07/03/2006	INFORMATION DISCLOSURE STATEMENT (IDS) FILED			
37	07/14/2006	DATE FORWARDED TO EXAMINER			
36	07/03/2006	RESPONSE AFTER NON-FINAL ACTION			
35	04/17/2006	MAIL NON-FINAL REJECTION			
34	04/14/2006	NON-FINAL REJECTION			
33	01/25/2006	INFORMATION DISCLOSURE STATEMENT CONSIDERED			
32	01/25/2006	REFERENCE CAPTURE ON IDS			
31.7	01/25/2006	INFORMATION DISCLOSURE STATEMENT (IDS) FILED			
31	01/25/2006	INFORMATION DISCLOSURE STATEMENT (IDS) FILED			
30	02/10/2006	DATE FORWARDED TO EXAMINER			
29	01/25/2006	REQUEST FOR CONTINUED EXAMINATION (RCE)			
28	02/10/2006	DISPOSAL FOR A RCE/CPA/129 (EXPRESS ABANDONMENT IF CPA)			
27	01/25/2006	WORKFLOW - REQUEST FOR RCE - BEGIN			

26	10/25/2005	MAIL FINAL REJECTION (PTOL - 326)			
25	10/24/2005	FINAL REJECTION			
24	09/09/2005	CORRESPONDENCE ADDRESS CHANGE			
23	08/25/2005	DATE FORWARDED TO EXAMINER			
22	08/17/2005	RESPONSE AFTER NON-FINAL ACTION			
21	06/03/2005	MAIL NON-FINAL REJECTION	415		-1
20	05/31/2005	NON-FINAL REJECTION			
19	05/11/2005	CASE DOCKETED TO EXAMINER IN GAU			
18	11/15/2004	PRELIMINARY AMENDMENT			
17	11/15/2004	WORKFLOW INCOMING AMENDMENT IFW			
16	10/01/2004	IFW TSS PROCESSING BY TECH CENTER COMPLETE			
15	05/21/2004	REFERENCE CAPTURE ON IDS			
14	05/09/2003	REFERENCE CAPTURE ON IDS			
13	08/30/2004	REFERENCE CAPTURE ON IDS			
12.7	08/30/2004	INFORMATION DISCLOSURE STATEMENT (IDS) FILED			
12	08/30/2004	INFORMATION DISCLOSURE STATEMENT (IDS) FILED			
11	07/21/2004	CASE DOCKETED TO EXAMINER IN GAU			
10.7	05/21/2004	INFORMATION DISCLOSURE STATEMENT (IDS) FILED			
10	05/21/2004	INFORMATION DISCLOSURE STATEMENT (IDS) FILED			
9	02/21/2004	CASE DOCKETED TO EXAMINER IN GAU			
8.7	05/09/2003	INFORMATION DISCLOSURE STATEMENT (IDS) FILED			
8	05/09/2003	INFORMATION DISCLOSURE STATEMENT (IDS) FILED			
7	06/05/2003	CASE DOCKETED TO EXAMINER IN GAU			
6	05/21/2003	TRANSFER INQUIRY TO GAU			
5	05/02/2003	APPLICATION DISPATCHED FROM OIPE			
4	05/01/2003	APPLICATION IS NOW COMPLETE			
3	04/11/2003	IFW SCAN & PACR AUTO SECURITY REVIEW			
2	03/06/2003	IFW SCAN & PACR AUTO SECURITY REVIEW			
1	02/14/2003	INITIAL EXAM TEAM NN			

Search Another: Application# Search

EXPLANATION OF PTA CALCULATION

EXPLANATION OF PTE CALCULATION

To go back, right click here and select Back. To go forward, right click here and select Forward. To refresh, right click here and select Refresh.

Back to OASIS | Home page

UNITED STATES PATENT AND TRADEMARK OFFICE

COMMISSIONER FOR PATENTS
UNITED STATES PATENT AND TRADEMARK OFFICE
P.O. BOX 1450
ALEXANDRIA, VA 22313-1450
www.uspto.gov

Paper No. 6

Kevin McAndrews
KLA-Tencor Corp.
160 Rio Robles
San Jose, CA 95134-1809

COPY MAILED

MAR 2 5 2004

OFFICE OF PETITIONS

ON PETITION

In re Application of
David M.W. Evans, et. al.
Application No. 10/366,862
Filed: February 13, 2003
Attorney Docket No. KT-1003

This is a decision on the petition under 37 CFR 1.137(b), filed March 15, 2004, to revive the above-identified application.

The above-identified application became abandoned for failure to reply in a timely manner to the Notice to File Corrected Application Papers (Notice) mailed March 21, 2003. The Notice set a period for reply of two (2) months from the mail date of the Notice. No extensions of time under the provisions of 37 CFR 1.136(a) was obtained. Accordingly, the above-identified application became abandoned after midnight May 21, 2003.

In response to the Notice to File Corrected Application Papers, petitioner submitted with the instant petition $1,330 for the petition to revive fee, and eighteen (18) sheets of replacement drawings, containing Figures 1-12c, in compliance with 37 CFR 1.84.

Since the requirements for a grantable petition have been met, the petition is **GRANTED**.

The application file is being forwarded to the Office of Initial Patent Examination for further processing.

Telephone inquiries concerning this decision should be directed to Andrea Smith at (703) 308-6711.

Andrea Smith
Petitions Examiner
Office of Petitions
Office of the Deputy Commissioner
for Patent Examination Policy

UNITED STATES PATENT AND TRADEMARK OFFICE

Commissioner for Patents
United States Patent and Trademark Office
P.O. Box 1450
Alexandria, VA 22313-1450
www.uspto.gov

KEVIN McANDREWS
KLA-TENCOR CORP.
160 RIO ROBLES
SAN JOSE, CA 95134-1809

COPY MAILED

MAR 2 6 2007

OFFICE OF PETITIONS

In re Application of :
David M.W. Evans et al :
Application No. 10/366,862 : DECISION ON PETITION
Filed: February 13, 2003 :
Attorney Docket No. KT-1003 :

This is a decision on the petition under 37 CFR 1.137(b), filed October 23, 2006, to revive the above-identified application.

The petition is **GRANTED**.

This application became abandoned for failure to timely pay the issue and publication fees on or before September 6, 2006, as required by the Notice of Allowance and Fee(s) Due, mailed June 6, 2006. Accordingly, the date of abandonment of this application is September 7, 2006. A Notice of Abandonment was mailed on October 9, 2006.

The petition satisfies the requirements of 37 CFR 1.137(b) in that petitioner has supplied (1) the reply in the form of payment of the issue fee of $1,400 and the publication fee of $300, (2) the petition fee of $1,500, and (3) a proper statement of unintentional delay. Accordingly, the issue and publication fees are accepted as being unintentionally delayed.

It is not apparent whether the person signing the statement of unintentional delay was in a position to have firsthand or direct knowledge of the facts and circumstances of the delay at issue. Nevertheless, such statement is being treated as having been made as the result of a reasonable inquiry into the facts and circumstances of such delay. See 37 CFR 10.18(b) and Changes to Patent Practice and Procedure; Final Rule Notice, 62 Fed. Reg. 53131, 53178 (October 10, 1997), 1203 Off. Gaz. Pat. Office 63, 103 (October 21, 1997). In the event that such an inquiry has not been made, petitioner must make such an inquiry. If such inquiry results in the discovery that it is not correct that the entire delay in filing the required reply from the due date for the reply until the filing of a grantable petition pursuant to 37

CFR 1.137(b) was unintentional, petitioner must notify the Office.

There is no indication that the person signing the petition was ever given a power of attorney to prosecute the application. If the person signing the petition desires to receive future correspondence regarding this application, the appropriate power of attorney document must be submitted. While a courtesy copy of this decision is being mailed to the person signing the petition, all future correspondence will be directed to the address currently of record until appropriate instructions are received.

Telephone inquiries concerning this decision should be directed to the undersigned at (571) 272-3218.

This application is being referred to Publishing Division for appropriate processing in accordance with this decision on petition.

Frances Hicks
Petitions Examiner
Office of Petitions

cc:

Rick Barnes
P. O. Box 1871
Knoxville, TN 37923

UNITED STATES PATENT AND TRADEMARK OFFICE

Commissioner for Patents
United States Patent and Trademark Office
P.O. Box 1450
Alexandria, VA 22313-1450
www.uspto.gov

DAVID M. KETTNER
QUARLES & BRADY LLP
P O BOX 2113
MADISON, WI 53701-2113

COPY MAILED

MAR 26 2007

OFFICE OF PETITIONS

In re Application of :
Surya K. Mallapragada et al :
Application No. 10/366,864 :
Filed: February 14, 2003 :
Attorney Docket No. :
480927.90103

ON PETITION

This is a decision on the petition under 37 CFR 1.137(b), filed December 8, 2006, to revive the above-identified application.

The petition is **GRANTED**.

The application became abandoned for failure to submit drawings on or before November 27, 2006 (November 25, 2006, the due date, was a Saturday) in reply to the Notice Regarding Drawings, mailed September 25, 2006, which set a period for reply of two (2) months. Accordingly, this application became abandoned on November 28, 2006, prior to the due date for payment of the issue fee.

The petition satisfies the requirements of 37 CFR 1.137(b) in that petitioner has supplied (1) the required reply in the form of replacement drawings, (2) the petition fee of $750, and (3) a proper statement of unintentional delay. Accordingly, the failure to timely reply to the Notice of September 25, 2006 is accepted as being unintentionally delayed.

The file does not indicate a change of address has been submitted, although the address given on the petition differs from the address of record. If appropriate, a change of address should be filed in accordance with MPEP 601.03. A courtesy copy of this decision is being mailed to the address given on the petition; however, the Office will mail all future correspondence solely to the address of record.

This application is being referred to Publishing Division for appropriate processing in accordance with this decision on petition.

Telephone inquiries concerning this decision should be directed to the undersigned at (571) 272-3218.

Frances Hicks
Petitions Examiner
Office of Petitions

cc:

Zhibin Ren
Quarles & Brady LLP
411 E. Wisconsin Avenue
Milwaukee, WI 53202

UNITED STATES PATENT AND TRADEMARK OFFICE

COMMISSIONER FOR PATENTS
UNITED STATES PATENT AND TRADEMARK OFFICE
P.O. BOX 1450
ALEXANDRIA, VA 22313-1450
www.uspto.gov

MAILED

JUL 12 2005

Technology Center 2100

Sergio Natero
21 SW 55 AV, #C
Miami, FL 33134

In re Application of: Sergio Natero	)	
Application No. 10/366,891	)	*SUA SPONTE*
Attorney Docket No. None	)	WITHDRAWAL OF HOLDING OF
Filed: February 14, 2003	)	ABANDONMENT *under 37 CFR 1.181*
For: GROOVE BASED ANCHORING	)	
FASTENERS	)	

The petition under 37 CFR 1.181 for withdrawal of the holding of abandonment, filed April 19, 2005 is acknowledged.

A review of the application reveals that a Notice of Abandonment was mailed to the Applicant on February 15, 2005. The notice incorrectly indicated that the instant application was being held abandoned for failure to respond to the Notice of Non-Compliant Amendment (37 CFR § 1.121) mailed on July 22, 2004 that was sent in response to the amendment filed June 21, 2004 (along with a one-month extension of time under 37 CFR § 1.136(a)) which was in turn responsive to the Non-Final Office communication mailed on March 16, 2004. Applicant's timely filed response and amendment bearing a certificate of mailing under 37 CFR § 1.8(a) of August 21, 2004, is currently located in the file.

In view of these facts, the abandonment of the application was clearly in error and is hereby **VACATED**. The Office regrets any inconvenience this may have caused.

The application is being forwarded to the Supervisory Legal Instruments Examiner with instructions to **WITHDRAW** the holding of abandonment and restore the instant application to pending status. The application will then be forwarded to the Examiner of record for prompt action on the merits.

Inquiries to this decision may be directed to Special Programs Examiner Brian Johnson at (571) 272-3595.

Brian L. Johnson 7/6/05
Special Program Examiner
Technology Center 2100
Computer Architecture, Software, and Information Security

SPE RESPONSE FOR CERTIFICATE OF CORRECTION

Paper No.:20070619

DATE : June 19, 2007

TO SPE OF : ART UNIT 2829

SUBJECT : Request for Certificate of Correction on Patent No.: 6,822,438

A response is requested with respect to the accompanying request for a certificate of correction.

Please complete this form and return with file, within **7** days to:
Certificates of Correction Branch - PK 3-910
Palm location **7590** - Tel. No. 305-8201

With respect to the change(s) requested, correcting Office and/or Applicant's errors, should the patent read as shown in the certificate of correction? No new matter should be introduced, nor should the scope or meaning of the claims be changed.

Thank You For Your Assistance **Certificates of Correction Branch**

The request for issuing the above-identified correction(s) is hereby:
Note your decision on the appropriate box.

☒ **Approved** **All** changes apply.

☐ **Approved in Part** Specify below which changes **do not** apply.

☐ **Denied** State the reasons for denial below.

Comments:

Ha Nguyen

SPE: Ha Nguyen **Art Unit** 2829

UNITED STATES PATENT AND TRADEMARK OFFICE

Commissioner for Patents
United States Patent and Trademark Office
P.O. Box 1450
Alexandria, VA 22313-1450
www.uspto.gov

TRASK BRITT
P O BOX 2550
SALT LAKE CITY, UT 84110

COPY MAILED

AUG 23 2006

OFFICE OF PETITIONS

In re Application of Mark T. Van Horn et al Application No. 10/366,922 Filed: February 13, 2003 Attorney Docket No. 4403.1US (00-0209.01/US)	DECISION GRANTING PETITION UNDER 37 CFR 1.313(c)(2)

This is a decision on the petition, filed August 17, 2006, under 37 CFR 1.313(c)(2) to withdraw the above-identified application from issue after payment of the issue fee.

The petition is **GRANTED**.

The above-identified application is withdrawn from issue for consideration of a submission under 37 CFR 1.114 (request for continued examination). See 37 CFR 1.313(c)(2).

Petitioner is advised that the issue fee paid on June 26, 2006 in the above-identified application cannot be refunded. If, however, the above-identified application is again allowed, petitioner may request that it be applied towards the issue fee required by the new Notice of Allowance.[1]

Telephone inquiries should be directed to the undersigned at (571) 272-3218.

This matter is being referred to Technology Center AU 2829 for processing of the request for continued examination under 37 CFR 1.114 and for consideration of the Information Disclosure Statement.

Frances Hicks
Petitions Examiner
Office of Petitions

C:\Documents and Settings\FHicks\My Documents\470\Aug9\366922.wpd

---

[1] *The request to apply the issue fee to the new Notice may be satisfied by completing and returning the new Part B – Fee(s) Transmittal Form (along with any balance due at the time of submission). Petitioner is advised that the Issue Fee Transmittal Form must be completed and timely submitted to avoid abandonment.*

UNITED STATES PATENT AND TRADEMARK OFFICE

COMMISSIONER FOR PATENTS
UNITED STATES PATENT AND TRADEMARK OFFICE
P.O. BOX 1450
ALEXANDRIA, VA 22313-1450
www.uspto.gov

BACON & THOMAS, PLLC
625 SLATERS LANE
FOURTH FLOOR
ALEXANDRIA, VA 22314

COPY MAILED

MAR 2 2 2007

OFFICE OF PETITIONS

In re Patent No. 6,947,887 :
Issue Date: September 20, 2005 :
Application No. 10/366,931 : ON PETITION
Filed: February 19, 2003 :
Attorney Docket No. PANS3002/REF :

This is a decision on the petition under 37 CFR 1.182, filed November 16, 2006, requesting issuance of a duplicate Letters Patent for the above-identified patent.

It is noted that petitioner submitted a petition fee of $130. Since the requisite petition fee is $400, the $270 balance of the petition fee is being charged to counsel's deposit account as authorized.

The petition is **granted**.

The Publishing Division is directed to issue duplicate Letters Patent.

Any questions concerning this matter may be directed to the undersigned at (571) 272-3204. Any questions concerning issuance of the duplicate Letters Patent should be directed to Krystal Paige at (703) 308-9250, Ext. 139.

A copy of this decision is being faxed to Publishing Division for issuance of a duplicate Letters Patent.

Sherry D. Brinkley
Petitions Examiner
Office of Petitions

cc: Krystal Paige, P/OPPD, South Tower, 8th Floor, Room C-32 (FAX 571-270-9937)

UNITED STATES PATENT AND TRADEMARK OFFICE

COMMISSIONER FOR PATENTS
UNITED STATES PATENT AND TRADEMARK OFFICE
P.O. BOX 1450
ALEXANDRIA, VA 22313-1450
www.uspto.gov

JUN - 9 2004

MAILED

JUN - 9 2004

OFFICE OF THE DIRECTOR
TC 3600

Barnes & Thornburg
11 South Meridian
Indianapolis, IN 46204

In re application of
Brian J. Shea
Application No. 10/366,942
Filed: February 14, 2003
For: RECREATIONAL VEHICLE HAVING SLIDE-OUT ATRIUM ROOM

DECISION ON PETITION TO MAKE SPECIAL (INFRINGEMENT)

This is a decision on the petition under 37 C.F.R § 1.102(d) filed April 16, 2004 to make the above-identified application special.

The petition requests that the above-identified application be made special under the procedure set forth in M.P.E.P. § 708.02, item II: Infringement.

MPEP 708.02 states that a Petition to Make Special based on Infringement must have the following: (1) the appropriate petition fee under 37 CFR 1.17(i); (2) a statement by the assignee, applicant, or attorney alleging: (A) that there is an infringing device or product actually on the market or method in use; (B) that a rigid comparison of the alleged infringing device, product or method with the claims of the application has been made, and that, in his or her opinion, some of the claims are unquestionably infringed; and (C) that he or she has made a careful and thorough search of the prior art, or has good knowledge of the prior art, and has sent a copy of the references deemed most closely related to the subject matter encompassed by the claims.

The petition filed April 16, 2004 meets all of the requirements above and, therefore, the petition is **GRANTED**.

The examiner is directed (1) to make an interference search for possible interfering applications; (2) to promptly examine this application out of turn; and (3) if any interfering application is discovered, to examine such application simultaneously and state in the first official letter of such application that it is being taken out of turn because of a possible interference.
Petitioner is advised that this application will continue to be special, throughout its entire prosecution and pendency, including interference and appeal, if any,

only if petitioner makes a prompt *bona fide* effort, in response to each Office action, to place the application in condition for allowance, even if it is necessary to conduct an interview with the examiner to accomplish this purpose.

Randolph A. Reese
Special Programs Examiner
Technology Center 3600
(703) 308-2121

RAR/vdb: 6/3/04

UNITED STATES PATENT AND TRADEMARK OFFICE

COMMISSIONER FOR PATENTS
UNITED STATES PATENT AND TRADEMARK OFFICE
WASHINGTON, D.C. 20231
www.uspto.gov

APPLICATION NUMBER	FILING RECEIPT DATE	FIRST NAMED APPLICANT	ATTORNEY DOCKET NUMBER
10/366,942	2/14/2003	Brian J. Shea	557-002 Gulf Stream

CONFIRMATION NO.
3188

JAMES D. HALL
BOTKIN & HALL, LLP
105 E. JEFFERSON BLVD.
SUITE 400
SOUTH BEND IN 46601

Date Mailed: April 18, 2006

Decision Granting Petition to Withdraw Abandonment

This is in response to the petition under 37 CFR 1.181, for withdrawal of holding of abandonment.

The petition is granted.

The holding of abandonment has been withdrawn. The application will be changed to a pending status.

Telephone inquiries should be directed to the Office of Patent Publication, the Pre-Grant Publication Division, at 703-605-4283.

Kaletus King
Pre-Grant Publication Division
Office of Patent Publication

UNITED STATES PATENT AND TRADEMARK OFFICE

Commissioner for Patents
United States Patent and Trademark Office
P.O. Box 1450
Alexandria, VA 22313-1450
www.uspto.gov

SENNIGER POWERS
ONE METROPOLITAN SQUARE
16TH FLOOR
ST LOUIS, MO 63102

COPY MAILED

NOV 2 1 2005

OFFICE OF PETITIONS

In re Application of	:	
James P. Coleman et al	:	
Application No. 10/366,947	:	ON PETITION
Filed: February 14, 2003	:	
Attorney Docket No. MTC 6642.139-21(51734)	:	

This is a decision on the petition under 37 CFR 1.313(c)(2), filed November 18, 2005, to withdraw the above-identified application from issue after payment of the issue fee.

The petition is **GRANTED**.

The above-identified application is withdrawn from issue for consideration of a submission under 37 CFR 1.114 (request for continued examination). See 37 CFR 1.313(c)(2).

Petitioner is advised that the issue fee paid on October 18, 2005 in the above-identified application cannot be refunded. If, however, the above-identified application is again allowed, petitioner may request that it be applied towards the issue fee required by the new Notice of Allowance.[1]

Telephone inquiries should be directed to Wan Laymon at (571) 272-3220.

This matter is being referred to Technology Center AU 1626 for processing of the request for continued examination under 37 CFR 1.114 and for consideration of the concurrently filed IDS.

Wan Laymon
Petitions Examiner
Office of Petitions

[1] The request to apply the issue fee to the new Notice may be satisfied by completing and returning the new Issue Fee Transmittal Form PTOL-85(b), which includes the following language thereon: "Commissioner for Patents is requested to apply the Issue Fee and Publication Fee (if any) or re-apply any previously paid issue fee to the application identified above." Petitioner is advised that, whether a fee is indicated as being due or not, the Issue Fee Transmittal Form **must** be completed and timely submitted to avoid abandonment. Note the language in bold text on the first page of the Notice of Allowance and Fee(s) Due (PTOL-85).

UNITED STATES PATENT AND TRADEMARK OFFICE

Commissioner for Patents
United States Patent and Trademark Office
P.O. Box 1450
Alexandria, VA 22313-1450
www.uspto.gov

NOV 0 8 2005

John Eldredge
Myers, Dawes & Andras LLP
19900 MacArthur Blvd., Suite 1150
Irvine, CA 92612

In re Application of:	:	
MITTELSTEIN et al.	:	DECISION ON REQUEST TO WITHDRAW FROM RECORD
Serial No.: 10/366,953	:	
Filed: February 14, 2003	:	
Attorney Docket No.: **QDI.PAU.08**	:	

This is a decision on the request to withdraw as attorney of record under 37 C.F.R. § 1.36, filed May 09, 2005 and refilled May 16, 2005.

The request is **DISMISSED** as moot.

A review of the application file record reveals a proper revocation and power of attorney to the attorneys of MacPherson Kwok Chen & Heid LLP was filed on July 29, 2005. As such, the power of attorney for the attorneys and agents requesting withdrawal has already been revoked. Accordingly, the present request is moot, and must be dismissed.

All future communications form the Office will continue to be directed to the below-listed address until otherwise notified by applicant.

Inquiries related to this decision should be directed to Clayton E. LaBalle at (571) 272-1594.

Clayton E. LaBalle, Special Programs Examiner
Technology Center 2800
Semiconductors, Electrical and Optical
Systems and Components

cc: MacPherson Kwok Chen & Heid LLP
1762 Technology Drive
Suite 226
San Jose CA 95110

UNITED STATES PATENT AND TRADEMARK OFFICE

Commissioner for Patents
United States Patent and Trademark Office
P.O. Box 1450
Alexandria, VA 22313-1450
www.uspto.gov

FENWICK & WEST LLP
SILICON VALLEY CENTER
801 CALIFORNIA STREET
MOUNTAIN VIEW CA 94041

COPY MAILED
MAY 0 5 2006
OFFICE OF PETITIONS

In re Application of	:	
Joshi et al.	:	DECISION ON PETITION
Application No. 10/366,958	:	TO WITHDRAW
Filed: February 13, 2003	:	FROM RECORD
Attorney Docket No. 23202-07168	:	

This is a decision on the Request to Withdraw as attorney or agent of record under 37 C.F.R. § 1.36(b), filed January 13, 2006.

The request is **APPROVED**.

A grantable request to withdraw as attorney/agent of record must be signed by every attorney/agent seeking to withdraw or contain a clear indication that one attorney is signing on behalf of another/others. A request to withdraw will not be approved unless at least 30 (thirty) days would remain between the date of approval and the later of the expiration date of a time to file a response or the expiration date of the maximum time period which can be extended under 37 C.F.R. § 1.136(a).

The request was signed by Michael W. Fam on behalf of all attorneys of record who are associated with Customer Number 00758.

All attorneys/agents associated with Customer Number 00758 have been withdrawn. Applicant is reminded that there is no attorney of record at this time.

The request to change the correspondence of record is not acceptable as the requested correspondence address is not that of: (1) the first named inventor; or (2) the assignee of the entire interest. All future communications from the Office will continue to be directed to the assignee of the entire interest at the first below-listed address until otherwise properly notified by the applicant.

There is an outstanding Office action mailed February 24, 2006 that requires a reply from the applicant.

Telephone inquires concerning this decision should be directed to Petitions Examiner Liana Chase at (571) 272-3206. All other inquires concerning either the examination or status of the application should be directed to the Technology Center.

David Bucci
Petitions Examiner
Office of Petitions

Cc:

COLLATION, INC.
849 HIGH STREET
PALO ALTO, CA 94301

DUKE YEE
YEE & ASSOCIATES, P.C.
P.O. BOX 802333
DALLAS, TX 75380

UNITED STATES PATENT AND TRADEMARK OFFICE

Commissioner for Patents
United States Patent and Trademark Office
P.O. Box 1450
Alexandria, VA 22313-1450
www.uspto.gov

January 29, 2009

Qualcomm Incorporated
5775 Morehouse Drive
San Diego, CA 92121

Patent No.: 7,295,808 B2
Application No.: 10/366,960
Inventor(s): Samir S. Soliman
Issued: November 13, 2007
Title: **METHOD OF AND SYSTEM FOR CALIBRATING A REPEATER**

Re: Request for Certificate of Correction

Consideration has been given your request for the issuance of a certificate of correction for the above-identified patent under the provisions of Rule(s) 1.322 and/or 1.323.

Assignees' names and addresses (assignment data) printed in a patent, are based *solely* on information supplied in the appropriate space for identifying the assignment data, i.e., item 3 of the Issue Fee Transmittal Form PTOL-85B. Granting of a request under 37 CFR 3.81(b) is required to correct applicant's error providing ***incorrect or erroneous*** assignment data, *before* issuance of a Certificate of Correction, under 37 CFR 1.323 *(see Manual of Patent Examining Procedures (M.P.E.P) Chp.1400, sect. 1481).* This procedure is required *at any time after the issue fee is paid*, including after issuance of the patent.

In view of the foregoing, your request, in this matter, is hereby denied.

A request to correct the Assignee under 37 CFR 3.81(b) should include:

A. **the processing fee set forth in 37 CFR 1.117(h) (currently $130);**
B. a statement that the failure to include the correct assignee name on the PTOL-85B was inadvertent; and
C. a copy of the Notice of Recordation of Assignment Document, reflecting the reel and frame number where the assignment(s) is recorded and/or reflecting proof of *the date* the assignment was submitted for recordation.

In the Request, Applicant(s) may request that the file be forwarded to Certificates of Correction Branch, for issuance of a Certificate of Correction, if the Request is granted.

Any request under 37 CFR 3.81(b) should be directed to the following address or facsimile number:

By mail:	Mail Stop PETITIONS Commissioner for Patents Post Office Box 1450 Alexandria, VA 22313-1450
By hand:	Customer Service Window Mail Stop Petitions Randolph Building 401 Dulany Street Alexandria, VA 22314
By fax:	(571) 273-0025 ATTN: Office of Petitions

If a fee (currently $100) was previously submitted for consideration of a Request for Certificate of Correction, under CFR 1.323, to correct assignment data, no additional fee is required.

Virginia Tolbert
For Mary Diggs, Supervisor
Decisions & Certificate of Correction Branch
(703) 305-8309 or (703) **308-9390 ext 113**

vt

UNITED STATES PATENT AND TRADEMARK OFFICE

Commissioner for Patents
United States Patent and Trademark Office
P.O. Box 1450
Alexandria, VA 22313-1450
www.uspto.gov

BARNES & THORNBURG
600 ONE SUMMIT SQUARE
FORT WAYNE, IN 46802

COPY MAILED

SEP 0 9 2005

OFFICE OF PETITIONS

In re Application of	:	
Garry E. Balthes	:	
Application No. 10/366,973	:	ON PETITION
Filed: February 14, 2003	:	
Attorney Docket No. 29595/82582	:	

This is a decision on the petition under 37 CFR 1.137(b), filed July 1, 2005, to revive the above-identified application.

The petition is **GRANTED**.

The above-identified application became abandoned for failure to reply in a timely manner to the non-final Office action mailed October 12, 2004, which set a shortened statutory period for reply of three (3) months. No extensions of time under the provisions of 37 CFR 1.136(a) were obtained. Accordingly, the above-identified application became abandoned on January 13, 2005.

The petition satisfies the conditions for revival pursuant to the provisions of 37 CFR 1.137(b) in that (1) the reply in the form of an amendment; (2) the petition fee; and (3) the required statement of unintentional delay have been received. Accordingly, the reply to the non-final Office action of October 12, 2004 is accepted as having been unintentionally delay.

Telephone inquiries concerning this decision should be directed to Wan Laymon at (571) 272-3220.

This matter is being referred to Technology Center AU 1771.

Wan Laymon
Wan Laymon
Petitions Examiner
Office of Petitions
Office of the Deputy Commissioner
for Patent Examination Policy

UNITED STATES PATENT AND TRADEMARK OFFICE

Commissioner for Patents
United States Patent and Trademark Office
P.O. Box 1450
Alexandria, VA 22313-1450
www.uspto.gov

COPY MAILED

OCT 3 1 2007

OFFICE OF PETITIONS

Jane Massey Licata. Esquire
Licata & Tyrrell P.C.
66 E. Main Street
Marlton NJ 08053

In re Application of :
Abate-Shen et al. :
Application No. 10/366,990 : DECISION ON PETITION
Filed: February 13, 2003 :
Attorney Docket No. :
54704.8040US01 (UMD-0077) :

This is a decision on the petition under the unintentional provisions of 37 CFR 1.137(b), filed August 13, 2007, to revive the above-identified application.

The petition is **GRANTED**.

This above-identified application became abandoned for failure to timely file a response to a final Office Action which was mailed on June 1, 2006. The final Office Action set a three (3) month shortened statutory period for reply. No extensions of time were obtained under the provisions of 37 CFR §1.136(a). Accordingly, this application became abandoned on September 2, 2006. A Notice of Abandonment was mailed on December 20, 2006.

The petition satisfies the requirements of 37 CFR 1.137(b) in that petitioner has supplied (1) the reply in the form of a continuing application, (2) the petition fee of 750.00, and (3) a proper statement of unintentional delay.

An extension of time under 37 CFR 1.136 must be filed prior to the expiration of the maximum extendable period for reply. *See* In re Application of S., 8 USPQ2d 1630, 1631 (Comm'r Pats. 1988). Since the $510 extension of time fee submitted with the petition on August 13, 2007 was subsequent to the maximum extendable period for reply, petitioner may request a refund of this fee by writing to the following address: Mail Stop 16, Commissioner for Patents, P. O. Box 1450, Alexandria, VA 22313-1450. A copy of this decision should accompany petitioner's request.

The application is being revived solely for purposes of continuity. As continuity has been established by this decision reviving the application, the application is again abandoned in favor of a continuing application under 37 CFR 1.53(b).

Telephone inquiries concerning this decision should be directed to the undersigned at (571) 272-3215.

Charlema R. Grant

Charlema R. Grant
Petitions Attorney
Office of Petitions

UNITED STATES PATENT AND TRADEMARK OFFICE

Commissioner for Patents
United States Patent and Trademark Office
P.O. Box 1450
Alexandria, VA 22313-1450
www.uspto.gov

10142004

LEFFERT JAY & POLGLAZE, P.A.
P.O. BOX 581009
MINNEAPOLIS, MN 55458-1009

OCT 15 2004

In re Application of CHEVALLIER Application No. 10/367,014 Filed: February 14, 2003 Attorney Docket No. 400.035US02	: : : : : :	DECISION ON PETITION

This is a decision on the communication filed October 1, 2004, requesting that Notice of Abandonment be withdrawn. The communication has been treated as a petition requesting that the holding of abandonment in the above-identified application be withdrawn.

The petition to withdraw the holding of abandonment is GRANTED.

This application was held abandoned for failure to timely reply the non-final Office action mailed July 11, 2003, setting forth a three-month period of response. A Notice of Abandonment was mailed on September 22, 2003.

Petitioner asserts that an Amendment and Response to the Office action, a Terminal Disclaimer and a check for the Terminal Disclaimer fee was timely mailed to the Patent and Trademark Office (USPTO) on August 14, 2003. This is evidenced by the certificate of mailing, copies of the response, and the post card receipt indicating receipt of the papers in the USPTO on August 18, 2003.

The Amendment and Response to the Office action and the Terminal Disclaimer acknowledged as having been received in the USPTO on August 18, 2003 are not of record in the application file and cannot be located. However, M.P.E.P. §503 states, "A post card receipt which itemizes and properly identifies the papers which are being filed serves as prima facie evidence of receipt in the USPTO of all the items listed thereon on the date stamped thereon by the USPTO." Accordingly, it is concluded that the Amendment and Response to the Office action and the Terminal Disclaimer were timely received in the USPTO but lost after receipt thereof.

The revenue and accounting records indicates that the Terminal Disclaimer fee was paid by check on August 18, 2003.

For the above reasons, the Notice of Abandonment is hereby vacated and the holding of abandonment withdrawn. Inconvenience to petitioner is regretted.

The application file is being forwarded to the technical support staff for processing the response to the July 11, 2003 Office action. From there, it will be returned to the examiner for further prosecution.

Questions regarding this decision should be directed to Jose' G. Dees at 571-272-1569.

James L. Dwyer, Director
Technology Center 2800
Semiconductor, Electrical and Optical
Systems and Components

UNITED STATES PATENT AND TRADEMARK OFFICE

COMMISSIONER FOR PATENTS
UNITED STATES PATENT AND TRADEMARK OFFICE
P.O. BOX 1450
ALEXANDRIA, VA 22313-1450
www.uspto.gov

Paper No. 8

Townsend and Townsend and Crew, LLP
Two Embarcadero Center
Eighth Floor
San Francisco, CA 94111-3834

COPY MAILED
JAN 16 2004
OFFICE OF PETITIONS

In re Application of	:	
George Caudle, et al	:	
Application No. 10/367,015	:	ON PETITION
Filed: February 12, 2003	:	
Attorney Docket No. 018158-017210US	:	

This is in response to the "Petition Under 37 CFR 1.47(a), filed October 30, 2003.

The petition is **DISMISSED**.

Rule 47 applicant is given TWO (2) MONTHS from the mailing date of this decision to reply, correcting the below-noted deficiencies. Any reply should be entitled "Request for Reconsideration of Petition Under 37 CFR 1.47(a)," and should only address the deficiencies noted below, except that the reply may include an oath or declaration executed by the non-signing inventor.. **FAILURE TO RESPOND WILL RESULT IN ABANDONMENT OF THE APPLICATION.** Any extensions of time will be governed by 37 CFR 1.136(a).

A grantable petition under 37 CFR 1.47(a) requires: (1) proof that the non-signing inventor cannot be reached or refuses to sign the oath or declaration after having been presented with the application papers (specification, claims and drawings); (2) an acceptable oath or declaration in compliance with 35 U.S.C. §§ 115 and 116; (3) the petition fee; and (4) a statement of the last known address of the non-signing inventor. Applicant lacks item (1) set forth above.

Petitioner asserts that the second inventor, Vladimir Lemberg, refuses to sign the declaration for this application. Petitioner has provided a copy of a letter written by Mr. Lemberg stating that he will not sign the declaration. While it is obvious that Mr. Lemberg refuses to sign the declaration, there is no indication that Mr. Lemberg was presented with the application papers (specification, claims and drawings), as required by 37 CFR 1.47(a). MPEP 409.03(d) in pertinent part states:

> "A refusal by an inventor to sign an oath or declaration when the inventor has not been presented with the application papers does not itself suggest that the inventor is refusing to join the application unless it is clear that the inventor understands exactly what he or she is being asked to sign and refuses to accept the application papers. A copy of the application papers should be sent to the last known address of the nonsigning inventor, or, if the nonsigning inventor is represented by counsel, to the address of the nonsigning inventor's attorney...It is reasonable to require that the inventor be presented with the application papers before a petition under 37 CFR 1.47 is granted since such a procedure ensures that the inventor is apprised of the application to which the oath or declaration is directed."

In view thereof, petitioner must present the nonsigning inventor, Mr. Lemberg, with a copy of the application papers (specification, claims and drawings).

Where a refusal of the inventor to sign the application papers is alleged, the circumstances of the presentation of the application papers and of the refusal must be specified in a statement of facts by the person who presented the inventor with the application papers and/or to whom the refusal was made. Statements by a party not present when an oral refusal is made will not be accepted.

Proof that a *bona fide* attempt was made to present a copy of the application papers to the nonsigning inventor for signature, but the inventor refused to accept delivery of the papers or expressly stated that the application papers should not be sent, may be sufficient. When there is an express oral refusal, that fact along with the time and place of the refusal must be stated in the statement of facts. When there is an express written refusal, a copy of the document evidencing that refusal must be made part of the statement of facts.

Further correspondence with respect to this matter should be addressed as follows:

By Mail: Mail Stop PETITION
Commissioner for Patents
Post Office Box 1450
Alexandria, VA 22313-1450

Effective December 1, 2003, the Office of Petitions can no longer receive hand-carried correspondence, or facsimile transmissions of correspondence. The centralized location for hand-carried correspondence is the Customer Window located at:

2011 South Clark Place
Crystal Plaza Two Lobby
Room 1B03
Arlington, VA 22202

The centralized facsimile number is **(703) 872-9306.**

Telephone inquiries should be directed to the undersigned at (703) 306-3475.

Marianne Morgan
Petitions Examiner
Office of Petitions
Office of the Deputy Commissioner
for Patent Examination Policy

UNITED STATES PATENT AND TRADEMARK OFFICE

COMMISSIONER FOR PATENTS
UNITED STATES PATENT AND TRADEMARK OFFICE
P.O. BOX 1450
ALEXANDRIA, VA 22313-1450
www.uspto.gov

Paper No. 9

Townsend and Townsend and Crew, LLP
Two Embarcadero Center
Eighth Floor
San Francisco, CA 94111-3834

COPY MAILED

JAN 27 2004

OFFICE OF PETITIONS

In re Application of	:	
George Caudle, et al.	:	
Application No. 10/367,015	:	ON PETITION
Filed: February 12, 2003	:	
Attorney Docket No. 018158-017210US	:	

CORRECTED DECISION

This is in response to the petition under 37 CFR 1.47(a), filed October 30, 2003 and supplemented on November 17, 2003.

The petition is granted.

In view of the Supplemental Petition under 37 CFR 1.47(a) filed November 17, 2003, the decision mailed January 16, 2004 is hereby vacated.

Petitioner has shown that the non-signing inventor has refused to join in the filing of the above-identified application.

The above-identified application and papers have been reviewed and found in compliance with 37 CFR 1.47(a). This application is hereby accorded Rule 1.47(a) status.

As provided in 37 CFR 1.47(a), this Office will forward notice of this application's filing to the non-signing inventor at the address given in the petition. Notice of the filing of this application will also be published in the Official Gazette.

The application file is being forwarded to Technology Center 3700.

Telephone inquiries regarding this decision should be directed to the undersigned at (703) 306-3475.

Marianne E. Morgan

Marianne E. Morgan
Petitions Examiner
Office of Petitions
Office of the Deputy Commissioner
for Patent Examination Policy

UNITED STATES PATENT AND TRADEMARK OFFICE

COMMISSIONER FOR PATENTS
UNITED STATES PATENT AND TRADEMARK OFFICE
P.O. BOX 1450
ALEXANDRIA, VA 22313-1450
www.uspto.gov

Mr. Vladimir Lemberg
700 Baltic Circle
Unit 728
Redwood City, CA 94065

COPY MAILED
JAN 27 2004
OFFICE OF PETITIONS

In re Application of
George Caudle; and Vladimir Lemberg
Application No. 10/367,015
Filed: February 12, 2003
For: FLEXIBLE SCANNING BEAM IMAGING SYSTEM

Dear Mr. Lemberg:

You are named as a joint inventor in the above-identified United States patent application, filed under the provisions of 35 U.S.C. 116 (United States Code), and 37 CFR 1.47(a), Rules of Practice in Patent Cases. Should a patent be granted on the application you will be designated therein as a joint inventor.

As a named inventor you are entitled to inspect any paper in the file wrapper of the application, order copies of all or any part thereof (at a prepaid cost per 37 CFR 1.19) or make your position of record in the application. Alternatively, you may arrange to do any of the preceding through a registered patent attorney or agent presenting written authorization from you. If you care to join the application, counsel of record (see below) would presumably assist you. Joining the application would entail the filing of an appropriate oath or declaration by you pursuant to 37 CFR 1.63.

Telephone inquiries regarding this communication should be directed to the undersigned at (703) 306-3475. Requests for information regarding your application should be directed to the File Information Unit at (703) 308-2733. Information regarding how to pay for and order a copy of the application, or a specific paper in the application, should be directed to the Certification Division at (703) 308-9726 or 1 (800) 972-6382 (outside the Washington, DC area).

Marianne E. Morgan
Marianne E. Morgan
Petitions Examiner
Office of Petitions
Office of the Deputy Commissioner
for Patent Examination Policy

cc: Townsend and Townsend and Crew, LLP
Two Embarcadero Center, Eighth Floor
San Francisco, CA 94111-3834

UNITED STATES PATENT AND TRADEMARK OFFICE

Commissioner for Patents
United States Patent and Trademark Office
P.O. Box 1450
Alexandria, VA 22313-1450
www.uspto.gov

CARL I. BRUNDIDGE
ANTONELLI, TERRY, STOUT & KRAUS, LLP
SUITE 1800
ARLINGTON, VA 22209-9889

MAILED

FEB 16 2005

Technology Center 2100

In re Application of: Mizuno
Application No. 10/367,016
Filed: February 14, 2003
For: ISCSI STORAGE MANAGEMENT METHOD AND MANAGEMENT SYSTEM

DECISION ON PETITION TO MAKE SPECIAL (ACCELERATED EXAMINATION) UNDER M.P.E.P. §708.02 (VIII)

This is a response to the petition filed October 14, 2004, under 37 C.F.R. §1.102(d) and M.P.E.P. §708.02 (VIII): Accelerated Examination, to make the above-identified application special.

The Petition is **DISMISSED**.

M.P.E.P. §708.02, Section VIII which sets out the prerequisites for a grantable petition for Accelerated Examination under 37 C.F.R. §1.102(d) states in relevant part:

A new application (one which has not received any examination by the examiner) may be granted special status provided that applicant (and this term includes applicant's attorney or agent) complies with each of the following items:

(a) Submits a petition to make special accompanied by the fee set forth in 37 CFR 1.17(h);

(b) Presents all claims directed to a single invention, or if the Office determines that all the claims presented are not obviously directed to a single invention, will make an election without traverse as a prerequisite to the grant of special status;

(c) Submits a statement(s) that a pre-examination search was made, listing the field of search by class and subclass, publication, Chemical Abstracts, foreign patents, etc. The pre-examination search must be directed to the invention as claimed in the application for which special status is requested. A search made by a foreign patent office satisfies this requirement;

(d) Submits one copy each of the references deemed most closely related to the subject matter encompassed by the claims if said references are not already of record; and

(e) **Submits a detailed discussion of the references, which discussion points out, with the particularity required by 37 CFR 1.111 (b) and (c), how the claimed subject matter is patentable over the references.**

The petition filed October 14, 2004 fails to adequately meet requirement (e) of the criteria set forth above. With respect to requirement (e), a complete detailed discussion of the (aforementioned most closely related) references has not been provided with the necessary specificity required under 37 CFR 1.111 (b) and (c). Specifically, Petitioner should ensure that the above discussion is directed to how the language of ***each of*** the independent claims is specifically distinguishable and patentable from ***each of*** the references provided in requirement (d) above (whether taken individually or in combination with any other reference cited). Note, at least independent claims 12 and 15-18 differ in scope from the discussion presented in the petition with respect to independent claim 1.

Petition to Make Special **DISMISSED**.

Petitioner is given one opportunity to perfect the petition. Any request for reconsideration must be filed within TWO MONTHS of the mail date of this decision. Extensions of time under 37 CFR 1.136(a) are permitted by a declaration or statement providing the information as outlined above.

Until the renewed petition is submitted, the application will be returned to the examiner's docket to await treatment on the merits in the normal order of examination.

Brian L. Johnson
Special Program Examiner
Technology Center 2100
Computer Architecture, Software and Information Security
571-272-3595

BLJ: 2/14/05

UNITED STATES PATENT AND TRADEMARK OFFICE

COMMISSIONER FOR PATENTS
UNITED STATES PATENT AND TRADEMARK OFFICE
P.O. BOX 1450
ALEXANDRIA, VA 22313-1450
www.uspto.gov

JAMES W. GRAVES JR.
8447 DOVER CT.
ARVADA, CO 80005

COPY MAILED

AUG 18 2005

OFFICE OF PETITIONS

In re Application of :
Graves : DECISION ON PETITION
Application No. 10/367,019 :
Received: February 19, 2003 :
For: ENDLESS WATER BOWL :

This is a decision on the petition under 37 CFR 1.137(a), filed December 10, 2004, to revive the above-identified application.

The petition is **DISMISSED**.

Any request for reconsideration of this decision must be submitted within **TWO (2) MONTHS** from mail date of this decision. Extensions of time under 37 CFR 1.136(a) are permitted. The reconsideration request should include a cover letter entitled "Renewed Petition under 37 CFR 1.137(a)." This is not a final agency decision.

This application became abandoned June 26, 2003 for failure to timely file a proper reply to the Notice of Incomplete Nonprovisional Application (Notice) mailed April 25, 2003. The Notice set a two month shortened statutory period of time for reply. This decision precedes mailing of Notice of Abandonment.

A grantable petition under 37 CFR 1.137(a) must be accompanied by: (1) the required reply, unless previously filed; (2) the petition fee as set forth in 37 CFR 1.17(l); (3) a showing to the satisfaction of the Commissioner that the entire delay in filing the required reply from the due date for the reply until the filing of a grantable petition pursuant to 37 CFR 1.137(a) was unavoidable; and (4) any terminal disclaimer (and fee as set forth in 37 CFR 1.20(d)) required pursuant to 37 CFR 1.137(c).

The present petition fails to satisfy requirement (3) set forth above. Petitioner has failed to present a showing to the satisfaction of the Director that the entire delay in filing the required reply from the due date for the reply until the filing of a grantable petition pursuant to 37 CFR 1.137(a) was unavoidable.

The Office may revive an abandoned application if the delay in responding to the relevant outstanding Office requirement is shown to the satisfaction of the Commissioner to have been "unavoidable." See, 37 CFR 1.137(a)(3). Decisions on reviving abandoned applications have adopted the reasonably prudent person standard in determining if the delay was unavoidable. Ex parte Pratt, 1887 Dec. Comm'r Pat. 31, 32-33 (Comm'r Pat. 1887)(the term "unavoidable" "is applicable to ordinary human affairs, and requires no more or greater care or diligence than is generally used and observed by prudent and careful men in relation to their most important business"); In re Mattullath, 38 App. D.C. 497, 514-15 (D.C. Cir. 1912); Ex parte Henrich, 1913 Dec. Comm'r Pat. 139, 141 (Comm'r Pat. 1913). In addition, decisions on revival are made on a "case-by-case basis, taking all the facts and circumstances into account." Smith v. Mossinghoff, 671 F.2d 533, 538, 213 USPQ 977, 982 (D.C. Cir. 1982). A petition to revive an application as unavoidably abandoned cannot be granted where petitioner has failed to meet his or her burden of establishing the cause of the unavoidable delay. Haines v. Quigg, 673 F. Supp. 314, 5 USPQ2d 1130 (N.D. Ind. 1987).

Petitioner attributes the failure to timely file a proper reply to the Notice to "some unfortunate event," including a death in the family.

Petitioner has failed to set forth with specificity and supporting documentation the nature of the alleged delay in timely submitting a proper reply to the non-final Office action. Accordingly, petitioner has failed to establish the entire period of time from the time that the reply was due until the filing of a grantable petition has been unavoidable.

Any renewed petition must set forth with specificity and supporting documentation the nature of the delay alleged by petitioner for petitioner's failure to timely reply to the Notice and must sufficiently establish that the entire period of delay from the time a reply to the Requirement was due until the filing of a grantable petition has been unavoidable.

As the instant petition is vague worded, the undersigned is unable to suggest what type of supporting documentation petitioner may wish to consider submitting to aide petitioner in satisfying the requirement to establish that the entire period of delay has been unavoidable. Nonetheless, petitioner should consider submitting any and all supporting documentation that would establish unavoidable delay.

Petitioner, however, should be advised that the submission of supporting documentary evidence is completely voluntary. Petitioner should further be aware that the principal purpose for which the supporting documentary evidence is sought is for use by the Office in rendering a decision regarding the revival of the instant application. Moreover, petitioner should be advised that abandoned application files are open to public inspection. Hence, petitioner is cautioned that any and all information submitted in support of petitioner's petition is open for public inspection. Thus, petitioner is encouraged to redact any and all information that petitioner would not desire be disclosed publicly; i.e., social security numbers; credit card information; etcetera. Lastly, petitioner should be aware that a decision on petition can only be rendered based on non-redacted information. Additionally, petitioner's attention is directed to the attached USPTO Privacy Statement.

ALTERNATE VENUE

Petitioner is urged to consider filing a petition stating that the delay was unintentional. Petitioner's attention is directed to 37 CFR 1.137(b) which provides for the revival of an "unintentionally" abandoned application without a showing that the delay in prosecution or in late payment of an issue fee was "unavoidable". An "unintentional" petition under 37 CFR 1.137(b) must be accompanied by the required petition fee and reply.

The filing of a petition under 37 CFR 1.137(b) cannot be intentionally delayed and therefore must be filed promptly. A person seeking revival due to unintentional delay cannot make a statement that the delay was unintentional unless the entire delay, including the delay from the date it was discovered that the application was abandoned until the filing of the petition to revive under 37 CFR 1.137(b), was unintentional. A statement that the delay was unintentional is not appropriate if petitioner intentionally delayed the filing of a petition for revival under 37 CFR 1.137(b). (See enclosed.)

Further correspondence with respect to this matter should be addressed as follows:

By mail:

Mail Stop Petition
Commissioner for Patents
P.O. Box 1450
Alexandria, VA 22313-1450

By facsimile: (571) 272-8300

By hand: U.S. Patent and Trademark Office
Customer Service Window
Mail Stop Petition
Randolph Building
401 Dulany Street
Alexandria, VA 22314

Telephone inquiries concerning this matter may be directed to the undersigned at (571) 272-3205.

Alesia M. Brown
Petitions Attorney
Office of Petitions

Enclosure: PTO-SB-64

UNITED STATES PATENT AND TRADEMARK OFFICE

COMMISSIONER FOR PATENTS
UNITED STATES PATENT AND TRADEMARK OFFICE
P.O. BOX 1450
ALEXANDRIA, VA 22313-1450
www.uspto.gov

COPY MAILED
FEB 02 2006
OFFICE OF PETITIONS

JAMES W. GRAVES JR.
8447 DOVER CT.
ARVADA, CO 80005

In re Application of :
Graves : DECISION ON PETITION
Application No. 10/367,019 :
Received: February 19, 2003 :
For: ENDLESS WATER BOWL :

This is a decision on the petition renewed under 37 CFR 1.137(b), filed September 29, 2005, to revive the above-identified application.

The petition is **DISMISSED**.

Any request for reconsideration of this decision must be submitted within **TWO (2) MONTHS** from mail date of this decision. Extensions of time under 37 CFR 1.136(a) are permitted. The reconsideration request should include a cover letter entitled "Renewed Petition under 37 CFR 1.137(b)." This is not a final agency decision.

This application became abandoned June 26, 2003 for failure to timely file a proper reply to the Notice of Incomplete Nonprovisional Application (Notice) mailed April 25, 2003. The Notice set a two month shortened statutory period of time for reply. This decision precedes mailing of Notice of Abandonment. A petition under 37 CFR 1.137(a) was filed December 10, 2004 and dismissed September 29, 2005.

A grantable petition under 37 CFR 1.137(b) must be accompanied by: (1) the required reply, unless previously filed; (2) the petition fee as set forth in 37 CFR 1.17(l); (3) a statement that the entire delay in filing the required reply from the due date for the reply until the filing of a grantable petition pursuant to this paragraph was unintentional. The Director may require additional information where there is a question whether the delay was unintentional; and (4) any terminal disclaimer (and fee as set forth in 37 CFR 1.20(d)) required pursuant to 37 CFR 1.137(c).

Submission of the required petition fee is a prerequisite prior to treatment on the merits for any petition submitted under 37 CFR 1.137(b) for revival of an application unintentionally

delayed. Petitioner herein has failed to submit the required petition fee, currently $750.00, accordingly, the instant renewed petition has not been examined on the merits.

Any renewed petition must be accompanied by the required petition fee.

A cursory review of the instant petition as well as further review of the petition submitted December 10, 2004 reveals that petitioner is unfamiliar with patent petition procedures. While an inventor may prosecute the application (including file petitions), lack of skill in this field usually acts as a liability in affording the maximum protection for the invention disclosed. Applicant may wish to consider procuring the services of a registered patent attorney or agent to prosecute the application, since the value of a patent is largely dependent upon skilled preparation and prosecution. The Office cannot aid in selecting an attorney or agent.

A listing of registered patent attorneys and agents is available on the USPTO Internet web site http://www.uspto.gov in the Site Index under "Attorney and Agent Roster".

Applicants may also obtain a list of registered patent attorneys and agents located in their area by writing to the Mail Stop OED, Director of the U.S. Patent and Trademark Office, P.O. Box 1450, Alexandria, VA 22313-1450.

Further correspondence with respect to this matter should be addressed as follows:

By mail: **Mail Stop Petition**
Commissioner for Patents
P.O. Box 1450
Alexandria, VA 22313-1450

By facsimile: (571) 272-8300

By hand: U.S. Patent and Trademark Office
Customer Service Window
Mail Stop Petition
Randolph Building
401 Dulany Street
Alexandria, VA 22314

Telephone inquiries concerning this matter may be directed to the undersigned at (571) 272-3205.

Alesia M. Brown
Petitions Attorney
Office of Petitions

UNITED STATES PATENT AND TRADEMARK OFFICE

Commissioner for Patents
United States Patent and Trademark Office
P.O. Box 1450
Alexandria, VA 22313-1450
www.uspto.gov

COPY MAILED
MAY 1 8 2006
OFFICE OF PETITIONS

Donald L. Adle
29510 Greenboro
Farmington Hills, MI 48334

In re Application of :
Donald L. Adle :
Application No. 10/367,056 : ON PETITION
Filed: February 14, 2003 :
Attorney Docket No.

This is a decision on the petition under 37 CFR 1.181 to withdraw the holding of abandonment, filed on April 14, 2006.

The petition is **DISMISSED**.

The record reflects that a non-final Office action was mailed on September 20, 2004, allowing a shortened statutory period for reply of three months from its mailing date. Extensions of the time set for reply were available pursuant to 37 CFR 1.136(a). A response was filed on December 17, 2004. On December 2, 2005, a communication was mailed from the USPTO indicating the response of December 17, 2004, was not fully responsive to the non-final Office action. The communication allowed a non-extendable period for reply of one-month from its mailing date. No further responses were received within the allowable period, and the application became abandoned on January 3, 2006. A Notice of Abandonment was mailed on April 7, 2006. The instant petition was filed on April 14, 2006. Petitioner maintains that a response to the December 2, 2005, communication was mailed on December 9, 2005, via **certified mail**, but cited an incorrect application serial number. Petitioner should note that application 10/363,056 was reviewed, but the response petitioner alleges was mailed on December 9, 2005, was not found.

Section 711.03 of the *Manual of Patent Examining Procedure* provides guidance where, as in this case, petitioner is arguing that a timely response to the Office action was mailed and provides, in pertinent part, that:

> 37 CFR 1.10(c) through 1.10(e) >and 1.10(g)< set forth procedures for petitioning the Director of the USPTO to accord a filing date to correspondence as of the date of deposit of the correspondence as "Express Mail." A petition to withdraw the holding of abandonment relying upon a timely reply placed in "Express Mail" must include an appropriate petition under 37 CFR 1.10(c), (d), * (e)>, or (g)< (see MPEP § 513). When a paper is shown to have been mailed to the Office using the "Express Mail" procedures, the paper must be entered in PALM with the "Express Mail" date.
>
> Similarly, applicants may establish that a reply was filed with a postcard receipt that properly identifies the reply and provides *prima facie* evidence that the reply was timely filed. See MPEP § 503. For example, if the application has been held abandoned for failure to file a reply to a first Office action, and applicant has a postcard receipt showing that an amendment was timely filed in response to the Office action, then the holding of abandonment should be withdrawn upon the filing of a petition to withdraw the holding of

abandonment. When the reply is shown to have been timely filed based on a postcard receipt, the reply must be entered into PALM using the date of receipt of the reply as shown on the post card receipt.

Where a certificate of mailing under 37 CFR 1.8, but not a postcard receipt, is relied upon in a petition to withdraw the holding of abandonment, see 37 CFR 1.8(b) and MPEP § 512. As stated in 37 CFR 1.8(b)(3) the statement that attests to the previous timely mailing or transmission of the correspondence must be on a personal knowledge basis, or to the satisfaction of the Director of the USPTO. If the statement attesting to the previous timely mailing is not made by the person who signed the Certificate of Mailing (i.e., there is no personal knowledge basis), then the statement attesting to the previous timely mailing should include evidence that supports the conclusion that the correspondence was actually mailed (e.g., copies of a mailing log establishing that correspondence was mailed for that application). When the correspondence is shown to have been timely filed based on a certificate of mailing, the correspondence is entered into PALM with the actual date of receipt (i.e., the date that the duplicate copy of the papers was filed with the statement under 37 CFR 1.8).

37 CFR 1.8(b) also permits applicant to notify the Office of a previous mailing or transmission of correspondence and submit a statement under 37 CFR 1.8(b)(3) accompanied by a duplicate copy of the correspondence when a reasonable amount of time (e.g., more than one month) has elapsed from the time of mailing or transmitting of the correspondence. Applicant does not have to wait until the application becomes abandoned before notifying the Office of the previous mailing or transmission of the correspondence. Applicant should check the private Patent Application Information Retrieval (PAIR) system for the status of the correspondence before notifying the Office. See MPEP § 512.

The above-cited section of the MPEP explains that in order for correspondence to receive a filing date as of the date of deposit with the United States Postal Service (USPS), the correspondence must either be mailed via USPS Express Mail, or the correspondence must contain a proper certificate of mailing pursuant to 37 CFR 1.8. Correspondence may also receive the date of the receipt with the USPTO if petitioner provides an itemized Office date-stamped postcard whereby the USPTO acknowledges receipt of the item mailed. There is no evidence that petitioner used the procedures provided in 37 CFR 1.8 and 1.10, which, if properly utilized, would allow a filing to be accorded a filing date as of the date mailed or deposited, respectively, rather than the date the filing was received by the Office. The certificate of mailing procedures under 37 CFR 1.8 allow for a filing date to be accorded as of the date the filing was mailed rather than the date the filing was received by the Office provided the procedures set out in 37 CFR 1.8 are followed and the filing is not excepted under 37 CFR 1.8(2)(i). The procedures under 37 CFR 1.10 allow correspondence deposited with the United States Postal Service Express Mail Service pursuant to 37 CFR 1.10 to be accorded a filing date as of the date-in shown on the Express Mail label rather than the date the filing was received by the Office. Filings made by any other mail service, i.e., first class postage, USPS certified mail, FEDEX, Priority Mail, will not receive the benefit of 37 CFR 1.10.

The holding of abandonment will not be withdrawn because petitioner is not able to provide *prima facie* evidence that a proper response to the Office communication of December 2, 2005, was deposited with the USPS Express Mail Service within the period for reply, is not able to provide a certificate of mailing pursuant to 37 CFR 1.8, or an USPTO date-stamped postcard. The petition is dismissed accordingly.

Alternatively, petitioner may revive the application based on unintentional abandonment under 37 CFR 1.137(b) (enclosed). A grantable petition pursuant to 37 CFR 1.137(b) must be accompanied by the required reply, the required petition fee ($1500.00 for a large entity and $750.00 for a verified small entity), and a statement that the **entire** delay in filing the required reply from the due date for the reply until the filing of a grantable petition pursuant to 37 CFR 1.137(b) was unintentional.

Further correspondence with respect to this matter should be addressed as follows:

By mail: Commissioner for Patents
United States Patent and Trademark Office
Box 1450
Alexandria, VA 22313-1450

By facsimile: (571) 273-8300
Attn: Office of Petitions

Telephone inquiries concerning this decision should be directed to the undersigned (571) 272-3222.

Kenya A. McLaughlin
Petitions Attorney
Office of Petitions

Enclosure : Form PTO/SB/64

PTO/SB/64 (10-05)
Approved for use through 07/31/2006. OMB 0651-0031
U.S. Patent and Trademark Office; U.S. DEPARTMENT OF COMMERCE
Under the Paperwork Reduction Act of 1995, no persons are required to respond to a collection of information unless it displays a valid OMB control number.

PETITION FOR REVIVAL OF AN APPLICATION FOR PATENT ABANDONED UNINTENTIONALLY UNDER 37 CFR 1.137(b)

Docket Number (Optional)

First named inventor:

Application No.: Art Unit:

Filed: Examiner:

Title:

Attention: Office of Petitions
Mail Stop Petition
Commissioner for Patents
P.O. Box 1450
Alexandria, VA 22313-1450
FAX (571) 273-8300

NOTE: If information or assistance is needed in completing this form, please contact Petitions Information at (571) 272-3282.

The above-identified application became abandoned for failure to file a timely and proper reply to a notice or action by the United States Patent and Trademark Office. The date of abandonment is the day after the expiration date of the period set for reply in the office notice or action plus an extensions of time actually obtained.

APPLICANT HEREBY PETITIONS FOR REVIVAL OF THIS APPLICATION

NOTE: A grantable petition requires the following items:
(1) Petition fee;
(2) Reply and/or issue fee;
(3) Terminal disclaimer with disclaimer fee - required for all utility and plant applications filed before June 8, 1995; and for all design applications; and
(4) Statement that the entire delay was unintentional.

1. Petition fee

☐ Small entity-fee $ _____ (37 CFR 1.17(m)). Applicant claims small entity status. See 37 CFR 1.27.

☐ Other than small entity – fee $ _____ (37 CFR 1.17(m))

2. Reply and/or fee

A. The reply and/or fee to the above-noted Office action in the form of _____(identify type of reply):

☐ has been filed previously on _____.
☐ is enclosed herewith.

B. The issue fee and publication fee (if applicable) of $ _____.

☐ has been paid previously on _____.
☐ is enclosed herewith.

This collection of information is required by 37 CFR 1.137(b). The information is required to obtain or retain a benefit by the public which is to file (and by the USPTO to process) an application. Confidentiality is governed by 35 U.S.C. 122 and 37 CFR 1.11 and 1.14. This collection is estimated to take 1.0 hour to complete, including gathering, preparing, and submitting the completed application form to the USPTO. Time will vary depending upon the individual case. Any comments on the amount of time you require to complete this form and/or suggestions for reducing this burden, should be sent to the Chief Information Officer, U.S. Patent and Trademark Office, U.S. Department of Commerce, P.O. Box 1450, Alexandria, VA 22313-1450. DO NOT SEND FEES OR COMPLETED FORMS TO THIS ADDRESS. **SEND TO: Mail Stop Petition, Commissioner for Patents, P.O. Box 1450, Alexandria, VA 22313-1450.**

If you need assistance in completing the form, call 1-800-PTO-9199 and select option 2.

Under the Paperwork Reduction Act of 1995, no persons are required to respond to a collection of information unless it displays a valid OMB control number.

3. Terminal disclaimer with disclaimer fee

☐ Since this utility/plant application was filed on or after June 8, 1995, no terminal disclaimer is required.

☐ A terminal disclaimer (and disclaimer fee (37 CFR 1.20(d)) of $ _____ for a small entity or $ _____ for other than a small entity) disclaiming the required period of time is enclosed herewith (see PTO/SB/63).

4. STATEMENT: The entire delay in filing the required reply from the due date for the required reply until the filing of a grantable petition under 37 CFR 1.137(b) was unintentional. [NOTE: The United States Patent and Trademark Office may require additional information if there is a question as to whether either the abandonment or the delay in filing a petition under 37 CFR 1.137(b) was unintentional (MPEP 711.03(c), subsections (III)(C) and (D)).]

WARNING:

Petitioner/applicant is cautioned to avoid submitting personal information in documents filed in a patent application that may contribute to identity theft. Personal information such as social security numbers, bank account numbers, or credit card numbers (other than a check or credit card authorization form PTO-2038 submitted for payment purposes) is never required by the USPTO to support a petition or an application. If this type of personal information is included in documents submitted to the USPTO, petitioners/applicants should consider redacting such personal information from the documents before submitting them to the USPTO. Petitioner/applicant is advised that the record of a patent application is available to the public after publication of the application (unless a non-publication request in compliance with 37 CFR 1.213(a) is made in the application) or issuance of a patent. Furthermore, the record from an abandoned application may also be available to the public if the application is referenced in a published application or an issued patent (see 37 CFR 1.14). Checks and credit card authorization forms PTO-2038 submitted for payment purposes are not retained in the application file and therefore are not publicly available.

Signature	Date
Typed or printed name	Registration Number, if applicable
Address	Telephone Number
Address	

Enclosures: ☐ Fee Payment

☐ Reply

☐ Terminal Disclaimer Form

☐ Additional sheets containing statements establishing unintentional delay

☐ Other: _____

CERTIFICATE OF MAILING OR TRANSMISSION [37 CFR 1.8(a)]

I hereby certify that this correspondence is being:

☐ Deposited with the United States Postal Service on the date shown below with sufficient postage as first class mail in an envelope addressed to: Mail Stop Petition, Commissioner for Patents, P. O. Box 1450, Alexandria, VA 22313-1450.

☐ Transmitted by facsimile on the date shown below to the United States Patent and Trademark Office as (571) 273-8300.

Date	Signature
	Typed or printed name of person signing certificate

Privacy Act Statement

The **Privacy Act of 1974 (P.L. 93-579)** requires that you be given certain information in connection with your submission of the attached form related to a patent application or patent. Accordingly, pursuant to the requirements of the Act, please be advised that: (1) the general authority for the collection of this information is 35 U.S.C. 2(b)(2); (2) furnishing of the information solicited is voluntary; and (3) the principal purpose for which the information is used by the U.S. Patent and Trademark Office is to process and/or examine your submission related to a patent application or patent. If you do not furnish the requested information, the U.S. Patent and Trademark Office may not be able to process and/or examine your submission, which may result in termination of proceedings or abandonment of the application or expiration of the patent.

The information provided by you in this form will be subject to the following routine uses:

1. The information on this form will be treated confidentially to the extent allowed under the Freedom of Information Act (5 U.S.C. 552) and the Privacy Act (5 U.S.C 552a). Records from this system of records may be disclosed to the Department of Justice to determine whether disclosure of these records is required by the Freedom of Information Act.
2. A record from this system of records may be disclosed, as a routine use, in the course of presenting evidence to a court, magistrate, or administrative tribunal, including disclosures to opposing counsel in the course of settlement negotiations.
3. A record in this system of records may be disclosed, as a routine use, to a Member of Congress submitting a request involving an individual, to whom the record pertains, when the individual has requested assistance from the Member with respect to the subject matter of the record.
4. A record in this system of records may be disclosed, as a routine use, to a contractor of the Agency having need for the information in order to perform a contract. Recipients of information shall be required to comply with the requirements of the Privacy Act of 1974, as amended, pursuant to 5 U.S.C. 552a(m).
5. A record related to an International Application filed under the Patent Cooperation Treaty in this system of records may be disclosed, as a routine use, to the International Bureau of the World Intellectual Property Organization, pursuant to the Patent Cooperation Treaty.
6. A record in this system of records may be disclosed, as a routine use, to another federal agency for purposes of National Security review (35 U:S.C. 181) and for review pursuant to the Atomic Energy Act (42 U.S.C. 218(c)).
7. A record from this system of records may be disclosed, as a routine use, to the Administrator, General Services, or his/her designee, during an inspection of records conducted by GSA as part of that agency's responsibility to recommend improvements in records management practices and programs, under authority of 44 U.S.C. 2904 and 2906. Such disclosure shall be made in accordance with the GSA regulations governing inspection of records for this purpose, and any other relevant (*i.e.*, GSA or Commerce) directive. Such disclosure shall not be used to make determinations about individuals.
8. A record from this system of records may be disclosed, as a routine use, to the public after either publication of the application pursuant to 35 U.S.C. 122(b) or issuance of a patent pursuant to 35 U.S.C. 151. Further, a record may be disclosed, subject to the limitations of 37 CFR 1.14, as a routine use, to the public if the record was filed in an application which became abandoned or in which the proceedings were terminated and which application is referenced by either a published application, an application open to public inspection or an issued patent.
9. A record from this system of records may be disclosed, as a routine use, to a Federal, State, or local law enforcement agency, if the USPTO becomes aware of a violation or potential violation of law or regulation.

UNITED STATES PATENT AND TRADEMARK OFFICE

Commissioner for Patents
United States Patent and Trademark Office
P.O. Box 1450
Alexandria, VA 22313-1450
www.uspto.gov

Donald L. Adle
29510 Greenboro
Farmington Hills, MI 48334

COPY MAILED
AUG 14 2006
OFFICE OF PETITIONS

In re Application of

Donlad L. Adle :

Application No. 10/367,056

: DECISION ON PETITION

Filed: February 14, 2003

:

Attorney Docket No.

This is a decision on the petition under 37 CFR 1.137(b), filed July 17, 2006, to revive the above-identified application.

The petition is **GRANTED**.

The record reflects that a non-final Office action was mailed on September 20, 2004, allowing a shortened statutory period for reply of three months from its mailing date. Extensions of the time set for reply were available pursuant to 37 CFR 1.136(a). A response was filed on December 17, 2004. On December 2, 2005, a communication was mailed from the USPTO indicating the response of December 17, 2004, was not fully responsive to the non-final Office action. The communication allowed a non-extendable period for reply of one-month from its mailing date. No further responses were received within the allowable period, and the application became abandoned on January 3, 2006. A Notice of Abandonment was mailed on April 7, 2006. A petition under 37 CFR 1.181 was filed on April 14, 2006, and dismissed by a decision mailed May 18, 2006.

The response filed July 17, 2006, is noted .

The application is being forwarded to Technology Center 3700, GAU 3748 for further processing.

Telephone inquiries concerning this decision should be directed to the undersigned at (571) 272-3222.

Kenya A. McLaughlin
Petitions Attorney
Office of Petitions

UNITED STATES PATENT AND TRADEMARK OFFICE

Commissioner for Patents
United States Patent and Trademark Office
P.O. Box 1450
Alexandria, VA 22313-1450
www.uspto.gov

Paper No. 8

COPY MAILED

SEP 1 2 2004

OFFICE OF PETITIONS

INTELLECTUAL PROPERTY
CuraGen Corporation
555 LONG WHARF DRIVE
NEW HAVEN, CT 06511

In re Application of	:	
Amanda Jackson et al	:	
Application No. 10/367,057	:	DECISION GRANTING PETITION
Filed: February 14, 2003	:	UNDER 37 CFR 1.137(b)
Attorney Docket No. Cura 859	:	

This is a decision on the petition under 37 CFR 1.137(b), filed August 30, 2004, to revive the above-identified application.

The petition is **DISMISSED**.

The above-identified application became abandoned for failure to reply in a timely manner to the Notice to File Missing Parts of Application (Notice) mailed May 2, 2003. The Notice set a period for reply of two (2) months from the mail date of the Notice. No extensions of time under the provisions of 37 CFR 1.136(a) were obtained. Accordingly, the above-identified application became abandoned on July 3, 2003. A Notice of Abandonment was mailed on February 18, 2004.

Any request for reconsideration of this decision must be submitted within TWO (2) MONTHS from the mail date of this decision. Extensions of time under 37 CFR 1.136(a) are permitted. The reconsideration request should include a cover letter entitled "Renewed Petition under 37 CFR 1.137(b)." This is **not** a final agency action within the meaning of 5 U.S.C. § 704.

A grantable petition under 37 CFR 1.137(b) must be accompanied by: (1) the required reply, unless previously filed; (2) the petition fee as set forth in 37 CFR 1.17(m); (3) a statement that the entire delay in filing the required reply from the due date for the reply until the filing of a grantable petition pursuant to 37 CFR 1.137(b) was unintentional; and (4) any terminal disclaimer (and fee as set forth in 37 CFR 1.20(d)) required by 37 CFR 1.137(c). Where there is a question as to whether either

the abandonment or the delay in filing a petition under 37 CFR 1.137 was unintentional, the Commissioner may require additional information. See MPEP 711.03(c)(III)(C) and (D). The instant petition lacks item(s) (1).

The Notice of May 2, 2003 required (1) a signed oath or declaration; (2) $130 surcharge for the late filing of the oath or declaration; and ***(3) compliance with the requirements of 37 CFR 1.821-1.825***. The petition was not accompanied by item (3). Accordingly, before the petition can be granted, petitioner must satisfy all the outstanding requirements of the Notice.

Further correspondence with respect to this matter should be addressed as follows:

By mail: Mail Stop PETITIONS
Commissioner for Patents
Post Office Box 1450
Alexandria, VA 22313-1450

By hand: Customer Window located at:
U.S. Patent and Trademark Office
220 20th Street S
Customer Window, Mail Stop Petitions
Crystal Plaza Two Lobby, Room 1B03
Arlington, VA 22202

By fax: (703) 872-9306
ATTN: Office of Petitions

Any questions concerning this matter may be directed to the undersigned at (703) 305-8680.[1]

Frances Hicks

Frances Hicks
Petitions Examiner
Office of Petitions
Office of the Deputy Commissioner
for Patent Examination Policy

[1] Effective September 27, 2004, the phone number will be 571-272-3218.

UNITED STATES PATENT AND TRADEMARK OFFICE

Commissioner for Patents
United States Patent and Trademark Office
P.O. Box 1450
Alexandria, VA 22313-1450
www.uspto.gov

Paper No. 14

INTELLECTUAL PROPERTY
CuraGen Corporation
555 LONG WHARF DRIVE
NEW HAVEN, CT 06511

COPY MAILED
DEC 10 2004
OFFICE OF PETITIONS

In re Application of	:
Amanda Jackson et al	:
Application No. 10/367,057	: DECISION GRANTING PETITION
Filed: February 14, 2003	: UNDER 37 CFR 1.137(b)
Attorney Docket No. Cura 859	:

This is a decision on the renewed petition under 37 CFR 1.137(b), filed November 18, 2004, to revive the above-identified application.

The petition is **GRANTED**.

The petition satisfies the conditions for revival pursuant to the provisions of 37 CFR 1.137(b) in that (1) the reply; (2) the petition fee; and (3) the required statement of unintentional delay have been received. Accordingly, the reply to the Notice of May 2, 2003 is accepted as having been unintentionally delayed.

Telephone inquiries concerning this decision should be directed to the undersigned at (571) 272-3218.

The application file is being forwarded to the Office of Initial Patent Examination Division for preexamination processing.

Frances Hicks
Frances Hicks
Petitions Examiner
Office of Petitions
Office of the Deputy Commissioner
for Patent Examination Policy

UNITED STATES PATENT AND TRADEMARK OFFICE

Commissioner for Patents
United States Patent and Trademark Office
P.O. Box 1450
Alexandria, VA 22313-1450
www.uspto.gov

BLAKELY SOKOLOFF TAYLOR &
ZAFMAN
12400 WILSHIRE BOULEVARD
SEVENTH FLOOR
LOS ANGELES, CA 90025-1030

COPY MAILED

JAN 19 2006

OFFICE OF PETITIONS

In re Application of

Prosenjit Ghosh

Application No. 10/367,059

Filed: February 14, 2003

Attorney Docket No. 42.P16058

DECISION ON PETITION

This is a decision on the petition under 37 CFR 1.181(a) to withdraw the holding of abandonment, filed October 4, 2004.

The petition under 37 CFR 1.181(a) to withdraw the holding of abandonment is **granted**.

This application was held abandoned on March 4, 2004, after it was believed that no response was received to the non-final Office action mailed December 3, 2005. The non-final Office action allowed a period for reply of three months from its mailing date. Extensions of the time set for reply were available pursuant to 37 CFR 1.136(a). A Notice of Abandonment was mailed on July 1, 2004, indicating that a reply to the non-final Office action was not received.

The instant petition maintains that an amendment and formal drawings responsive to the non-final Office action was mailed and transmitted via facsimile on May 3, 2004, along with a request for an extension of time within the second month. It is noted that the drawings were sent via facsimile and received on May 4, 2004. The amendment was mailed. A copy of the amendment containing a certificate of mailing dated May 3, 2004 accompanied the petition.

Based on the aforementioned, it appears that the application was improperly held abandoned as a proper response was received prior to expiration of the statutory period for reply. The holding of abandonment is withdrawn, accordingly. No petition fee is due.

Deposit account 02-2666 will be charged $ 430.00 for the fee for the extension of time within the second month.

The application file is being forwarded Technology Center 3700, GAU 3743, for further processing.

Kenya A. McLaughlin
Petitions Attorney
Office of Petitions

UNITED STATES PATENT AND TRADEMARK OFFICE

Commissioner for Patents
United States Patent and Trademark Office
Washington, D.C. 20231
www.uspto.gov

Paper No. 4

ST. ONGE STEWARD JOHNSTON & REENS, LLC
986 BEDFORD STREET
STAMFORD, CT 06905-5619

COPY MAILED

APR 2 8 2003

OFFICE OF PETITIONS

In re Application of:
David E. Carpenter, Timothy J. Throne and Michael G. Smith
Application No. 10/367,084
Filed: February 14, 2003
Title of Invention: CONE-CLUTCHED ASSEMBLY

DECISION GRANTING STATUS UNDER 37 CFR 1.47(a)

This Decision is in response to a Petition Under 37 C.F.R. 1.47(a), filed with the instant application on February 14, 2003, to allow the other inventor(s) to proceed with the application on behalf of himself or herself and the nonsigning inventor(s).

The petition is **granted**.

The above-identified application and papers have been reviewed and found in compliance with 37 CFR 1.47(a). This application is hereby accorded Rule 1.47(a) status.

Petitioner has shown that the non-signing inventor, David E. Carpenter, refuses to sign the declaration.

As provided in Rule 1.47(a), this Office will forward notice of this application's filing to the non-signing inventor at the address given in the Petition. Notice of the filing of this application will also be published in the Official Gazette.

The application file is being returned to the Office of Initial Patent Examination for continued processing.

Telephone inquiries related to this decision may be directed to the undersigned at (703) 305-0014.

Derek L. Woods
Petitions Attorney
Office of Petitions

UNITED STATES PATENT AND TRADEMARK OFFICE

Commissioner for Patents
United States Patent and Trademark Office
Washington, D.C. 20231
www.uspto.gov

Mr. David E. Carpenter
C/O Mr. Todd Oberdick, Esq.
St. Onge Steward Johnston & Reens LLC
986 Bedford Street
Stamford, CT 06905-5619

COPY MAILED

APR 2 8 2003

OFFICE OF PETITIONS

In re Application of:
David E. Carpenter, Timothy J. Throne and Michael G. Smith
Application No. 10/367,084
Filed: February 14, 2003
Title of Invention: CONE-CLUTCHED ASSEMBLY

LETTER

Dear Mr. Carpenter:

You are named as a joint inventor in the above-identified United States patent application filed under the provisions of 35 U.S.C. 116 (United States Code) and 37 CFR 1.47(a), Rules of Practice in Patent Cases. Should a patent be granted on the application you will be designated therein as a joint inventor.

As a named inventor you are entitled to inspect any paper in the file wrapper of the application, order copies of all or any part thereof (at a prepaid cost per 37 CFR 1.19) or make your position of record in the application. Alternatively, you may arrange to do any of the preceding through a registered patent attorney or agent presenting written authorization from you. If you care to join the application, counsel of record (see below) would presumably assist you. Joining in the application would entail the filing of an appropriate oath or declaration by you pursuant to 37 CFR 1.63.

Telephone inquiries regarding this communication should be directed to the undersigned at (703) 305-0014. Requests for information regarding your application should be directed to the File Information Unit at (703) 308-2733. Information regarding how to pay for and order a copy of the application, or a specific paper in the application, should be directed to Certification Division at (703) 308-9726 or 1-800-972-6382 (outside the Washington D.C. area).

Derek L. Woods
Petitions Attorney
Office of Petitions

cc: ST. ONGE STEWARD JOHNSTON & REENS, LLC
986 BEDFORD STREET
STAMFORD, CT 06905-5619

UNITED STATES PATENT AND TRADEMARK OFFICE

Commissioner for Patents
United States Patent and Trademark Office
P.O. Box 1450
Alexandria, VA 22313-1450
www.uspto.gov
AMB

Paper No. 5

BOZICEVIC, FIELD & FRANCIS LLP
200 MIDDLEFIELD RD
SUITE 200
MENLO PARK, CA 94025

COPY MAILED

JUL 1 4 2003

OFFICE OF PETITIONS

In re Application of
Shackleton, et al.
Application No. 10/367,096
Filed: February 14, 2003
Atty. Dkt. No.: CHOR-004
For: ADJUSTABLEDEHYDRO-ESTRIOL (8-DHE3) AND DEHYDRO-PREGNANETRIOL (7-DHPT), AND METHODS OF THEIR SYNTHESIS

DECISION GRANTING STATUS UNDER 37 CFR 1.47(a)

This is in response to the petition under 37 CFR 1.47(a), filed June 16, 2003.

The petition is **GRANTED**.

Petitioner has shown William K. Wilson has refused to Petitioner has shown that the non-signing inventor has refused to join in the filing of the above-identified application papers.

Accordingly, the above-identified application and papers have been reviewed and found in compliance with 37 CFR 1.47(a). This application is hereby accorded Rule 1.47(a) status.

As provided in Rule 1.47(c), this Office will forward notice of this application's filing to the non-signing inventor at the address given in the petition. Notice of the filing of this application will also be published in the Official Gazette.

After this decision is mailed, the above-identified application will be returned to the Office of Initial Patent Examination for further processing.

Telephone inquiries related to this decision may be directed to the undersigned at (703) 305-0310.

Alesia M. Brown
Senior Petitions Attorney
Office of Petitions

UNITED STATES PATENT AND TRADEMARK OFFICE

COMMISSIONER FOR PATENTS
UNITED STATES PATENT AND TRADEMARK OFFICE
P.O. BOX 1450
ALEXANDRIA, VA 22313-1450
www.uspto.gov

COPY MAILED

JUL 1 4 2003

OFFICE OF PETITIONS

WILLIAM K. WILSON
3839 NORTH BRAESWOOD BLVD. APT. 6
HOUSTON, TX 77005

In re Application of
Shackleton, et al.
Application No. 10/367,096
Filed: February 14, 2003
Atty. Dkt. No.: CHOR-004
For: ADJUSTABLEDEHYDRO-ESTRIOL (8-DHE3) AND DEHYDRO-PREGNANETRIOL (7-DHPT), AND METHODS OF THEIR SYNTHESIS

LETTER

Dear Sir:

You are named as an inventor in the above-identified United States patent application filed under the provisions of 35 U.S.C. 116 (United States Code) and 37 C.F.R. § 1.47(a), Rules of Practice in Patent Cases. Should a patent be granted on the application you will be designated therein as a joint inventor.

As a named inventor you are entitled to inspect any paper in the file wrapper of the application, order copies of all or any part thereof (at a prepaid cost as per 37 C.F.R. § 1.19) or make your position of record in the application. Alternatively, you may arrange to do any of the preceding through a registered patent attorney or agent presenting written authorization from you. If you care to join the application, counsel of record (see below) would presumably assist you. Joining in the application would entail the filing of an appropriate oath or declaration by you pursuant to 37 C.F.R. § 1.63.

Telephone inquiries regarding this communication should be directed to the undersigned at (703) 305-0310. Requests for information regarding your application should be directed to the File Information Unit at (703) 308-2733. Information regarding how to pay for and order a copy of the application, or a specific paper in the application, should be directed to Certification Division at (703) 308-9726 or 1-800-972-6382 (outside the Washington D.C. area).

Alesia M. Brown
Senior Petitions Attorney
Office of Petitions

UNITED STATES PATENT AND TRADEMARK OFFICE

Commissioner for Patents
United States Patent and Trademark Office
P.O. Box 1450
Alexandria, VA 22313-1450
www.uspto.gov

HOWSON AND HOWSON
SUITE 210
501 OFFICE CENTER DRIVE
FT WASHINGTON PA 19034

COPY MAILED

MAR 3 0 2007

OFFICE OF PETITIONS

ON PETITION

In re Patent No. 7,162,617 :
Issued: January 9, 2007 :
Application No. 10/367,097 :
Filed: February 14, 2003 :
Attorney Docket Number: HAY1USA :

This is a decision on the petition, filed December 18, 2006, under 37 CFR 3.81(b) [1], to correct the assignee's name on the front of the Patent.

The petition is **GRANTED**.

Petitioner states that the assignee is FINEARCH INC., and that the failure to include the correct assignee name on the Fee(s) Transmittal form PTOL-85(b) was inadvertent. Accordingly, petitioner requests that a certificate of correction be issued to reflect the correct assignee on the front page of the Letters Patent.

37 CFR 3.81(b), effective June 25, 2004, reads:

> *After payment of the issue fee:* Any request for issuance of an application in the name of the assignee submitted after the date of payment of the issue fee, and any request for a patent to be corrected to state the name of the assignee, must state that the assignment was submitted for recordation as set forth in § 3.11 before issuance of the patent, and must include a request for a certificate of correction under § 1.323 of this chapter (accompanied by the fee set forth in § 1.20(a) and the processing fee set forth in § 1.17(i) of this chapter.

The request is accompanied by a certificate of correction (and fee) as required by 3.81(b). Further, Office assignment records reflect that FINEARCH INC. is the assignee of record. Accordingly, as the request complies with the provisions of 37 CFR 3.81(b), it would be appropriate for a certificate of correction to issue.

---

[1] *See* Official Gazette of June 22, 2004

Inquiries concerning this decision should be directed to the undersigned at (571) 272-3212. Any questions concerning the issuance of a certificate of correction should be directed to the Certificates of Correction Branch at (703) 305-8309.

This matter is being referred to the Certificates of Correction Branch for issuance of a certificate of correction.

Patricia Faison-Ball

Patricia Faison-Ball
Senior Petitions Attorney
Office of Petitions

UNITED STATES PATENT AND TRADEMARK OFFICE

COMMISSIONER FOR PATENTS
UNITED STATES PATENT AND TRADEMARK OFFICE
P.O. BOX 1450
ALEXANDRIA, VA 22313-1450
WWW.USPTO.GOV

Paper No. 5

FROMMER LAWRENCE & HAUG
745 FIFTH AVENUE- 10TH FL.
NEW YORK NY 10151

COPY MAILED

JUL 0 8 2003

OFFICE OF PETITIONS

BEST AVAILABLE COPY

In re Application of
Potter, Reed, Woo, Hejaz, Leblond, Leese& Purohit
Application No. 10/367,114
Filed: February 14, 2003
Attorney Docket No. 674519-2024
For: OESTROGEN-17-SULPHAMATES AS INHIBITORS OF STEROID SULPHATASE

DECISION ACCORDING STATUS UNDER 37 CFR 1.47(a)

This is in response to the petition under 37 CFR 1.47(a), filed June 17, 2003.

The petition is granted.

Petitioners have shown that the non-signing inventor, Hetam Hejaz, has constructively refused to join in the filing of the above-identified application after having been presented with the application papers. Specifically, the petition and accompanying exhibits establish that the inventor was mailed and received the application papers, including the specification, claims and drawings, but failed to respond to the request that he sign the declaration. Petitioners have submitted a declaration in compliance with 37 CFR 1.63 and 1.64.

This application and papers have been reviewed and found in compliance with 37 CFR 1.47(a). This application is hereby accorded Rule 1.47(a) status.

As provided in Rule 1.47(c), this Office will forward notice of this application's filing to the non-signing inventor at the address given in the petition. Notice of the filing of this application will also be published in the Official Gazette.

After this decision is mailed, the above-identified application will be forwarded to the Office of Initial Patent Examination for further processing.

Telephone inquiries should be directed to the undersigned at (703) 308-6712.

E. Shirene Willis

E. Shirene Willis
Senior Petitions Attorney
Office of Petitions

UNITED STATES PATENT AND TRADEMARK OFFICE

COMMISSIONER FOR PATENTS
UNITED STATES PATENT AND TRADEMARK OFFICE
P.O. BOX 1450
ALEXANDRIA, VA 22313-1450
WWW.USPTO.GOV

HETAM HEJAZ
P.O. BOX 19973
DUBAI
U.A.E.

COPY MAILED

JUL 0 8 2003

OFFICE OF PETITIONS

In re Application of
Potter, Reed, Woo, Hejaz, Leblond, Leese& Purohit
Application No. 10/367,114
Filed: February 14, 2003
Attorney Docket No. 674519-2024
For: OESTROGEN-17-SULPHAMATES AS INHIBITORS OF STEROID SULPHATASE

LETTER

Dear Dr. Hejaz:

You are named as a joint inventor in the above identified United States patent application, filed under the provisions of 35 U.S.C. 116 (United States Code), and 37 CFR 1.47(a), Rules of Practice in Patent Cases. Should a patent be granted on the application you will be designated therein as a joint inventor.

As a named inventor you are entitled to inspect any paper in the file wrapper of the application, order copies of all or any part thereof (at a prepaid cost per 37 CFR 1.19) or make your position of record in the application. Alternatively, you may arrange to do any of the preceding through a registered patent attorney or agent presenting written authorization from you. If you care to join the application, counsel of record (see below) would presumably assist you. Joining in the application would entail the filing of an appropriate oath or declaration by you pursuant to 37 CFR 1.63.

Requests for information regarding your application should be directed to the File Information Unit at (703)308-2733. Information regarding how to pay for and order a copy of the application, or a specific paper in the application, should be directed to Certification Division at (703)308-9726 or 1(800)972-6382 (outside the Washington D.C. area).

Telephone inquiries regarding this communication should be directed to the undersigned at (703) 308-6712.

E. Shirene Willis

E. Shirene Willis
Senior Petitions Attorney
Office of Petitions

ATTORNEY OF RECORD: FROMMER LAWRENCE & HAUG
745 FIFTH AVENUE- 10TH FL.
NEW YORK NY 10151

UNITED STATES PATENT AND TRADEMARK OFFICE

COMMISSIONER FOR PATENTS
UNITED STATES PATENT AND TRADEMARK OFFICE
P.O. BOX 1450
ALEXANDRIA, VA 22313-1450
www.uspto.gov

TOWNSEND AND TOWNSEND AND CREW, LLP
TWO EMBARCADERO CENTER
EIGHTH FLOOR
SAN FRANCISCO CA 94111-3834

COPY MAILED
AUG 25 2006
OFFICE OF PETITIONS

In re Application of :
Lambert : DECISION ON PETITION
Application No. 10/367,123 :
Filed: February 14, 2003 :
For: 018930-000112US :

This decision is in response to the petition to withdraw the holding of abandonment under 37 CFR 1.181 filed November 4, 2005 and supplemented June 20, 2006.

The petition is hereby **DISMISSED**.

Any request for reconsideration of this decision must be submitted within **TWO (2) MONTHS** from mail date of this decision. Extensions of time under 37 CFR 1.136(a) are permitted. The reconsideration request should include a cover letter entitled "Renewed Petition under 37 CFR 1.181." This is not a final agency decision.

This application became abandoned August 8, 2004 for failure to timely submit a proper reply to the non-final Office action mailed May 7, 2004. Notice of Abandonment was mailed August 10, 2005.

Petitioner has failed to set forth an explanation for failure to timely submit a proper reply to the non-final Office action other than that a preliminary amendment is alleged to have been submitted November 26, 2003.

Upon failure of the applicant to prosecute the application within six months after any action therein, of which notice has been given or mailed to the applicant, or within such shorter time, not less than thirty days, as fixed by the Director in such action, the application shall be regarded as abandoned by the parties thereto, unless it be shown to the satisfaction of the Director that such delay was unavoidable. *See*, 35 U.S.C. 133.

Accordingly, absent a timely response to the non-final Office action, the instant application became abandoned.

Any renewed petition must be accompanied by evidence that would warrant the withdrawal of the holding of abandonment. *See, generally*, MPEP 711.03(c).

ALTERNATE VENUE

Petitioner is strongly urged to consider filing a petition stating that the entire delay was unintentional. Petitioner's attention is directed to 37 CFR 1.137(b) which provides for the revival of an "unintentionally" abandoned application without a showing that the delay in prosecution or in late payment of an issue fee was "unavoidable." An "unintentional" petition under 37 CFR 1.137(b) must be accompanied by the required petition fee and reply.

The filing of a petition under 37 CFR 1.137(b) cannot be intentionally delayed and therefore must be filed promptly. A person seeking revival due to unintentional delay cannot make a statement that the delay was unintentional unless the entire delay, including the delay from the date it was discovered that the application was abandoned until the filing of the petition to revive under 37 CFR 1.137(b), was unintentional. A statement that the delay was unintentional is not appropriate if petitioner intentionally delayed the filing of a petition for revival under 37 CFR 1.137(b).

Further correspondence with respect to this matter should be addressed as follows:

By mail:	Mail Stop Petition Commissioner for Patents P.O. Box 1450 Alexandria, VA 22313-1450
By facsimile:	(571) 273-8300
By hand:	U.S. Patent and Trademark Office Customer Window Mail Stop Petition Randolph Building

Dulany Street
Alexandria, VA 22314

Telephone inquiries concerning this matter may be directed to the undersigned at (571) 272-3205.

Alesia M. Brown
Petitions Attorney
Office of Petitions

UNITED STATES PATENT AND TRADEMARK OFFICE

COMMISSIONER FOR PATENTS
UNITED STATES PATENT AND TRADEMARK OFFICE
P.O. BOX 1450
ALEXANDRIA, VA 22313-1450
www.uspto.gov

RICHARD R. MICHAUD
THE MICHAUD-DUFFY GROUP, LLP
SUITE 206
306 INDUSTRIAL PARK ROAD
MIDDLETOWN CT 06457

COPY MAILED
SEP 25 2006
OFFICE OF PETITIONS

In re Application of	:
Coffin et al.	:
Application No. 10/367,133	: DECISION ON PETITION
Filed: 14 February, 2003	: UNDER 37 CFR 1.78(a)(3)
Attorney Docket No. 6579-0060-1	:

This is a decision on the petition under 37 CFR 1.78(a)(3), filed on 31 March, 2006, to accept an unintentionally delayed claim under 35 U.S.C. § 120 for the benefit of priority to the prior-filed nonprovisional application set forth in the amendment filed with the petition.

The petition is **DISMISSED**.

A petition for acceptance of a claim for late priority under 37 CFR 1.78(a)(3) is only applicable to those applications filed on or after November 29, 2000. Further, the petition is appropriate only after the expiration of the period specified in 37 CFR 1.78(a)(2)(ii). In addition, the petition under 37 CFR 1.78(a)(3) must be accompanied by:

(1) the reference required by 35 U.S.C. § 120 and 37 CFR 1.78(a)(2)(i) of the prior-filed application, unless previously submitted;
(2) the surcharge set forth in § 1.17(t); and
(3) a statement that the entire delay between the date the claim was due under 37 CFR 1.78(a)(2)(ii) and the date the claim was filed was unintentional. The Director may require additional information where there is a question whether the delay was unintentional.

The petition does not satisfy item (1) above.

The reference to add the prior-filed application on page one following the first sentence of the specification is not acceptable as drafted since it improperly incorporates by reference the prior-filed application. An incorporation by reference statement added after an application's filing date is not effective because no new matter can be added to an application after its filing date (*see* 35 U.S.C. § 132(a)). If an incorporation by reference statement is included in an amendment to the specification to add a benefit claim under 35 U.S.C. § 120 after the filing date of the

application, the amendment would not be proper. When a benefit claim under 35 U.S.C. § 120 is submitted after the filing of an application, the reference to the prior application cannot include an incorporation by reference statement of the prior application. *See* Dart Industries v. Banner, 636 F.2d 684, 207 USPQ 273 (C.A.D.C. 1980). *Note* MPEP §§ 201.06(c) and 608.04(b).

Before the petition under 37 CFR § 1.78(a)(3) can be granted, a renewed petition and either an Application Data Sheet or a substitute amendment (complying with the provisions of 37 CFR 1.121 and 37 CFR 1.76(b)(5)) to correct the above matters are required.

Further correspondence with respect to this matter should be addressed as follows:

By mail: Mail Stop PETITIONS
Commissioner for Patents
Post Office Box 1450
Alexandria, VA 22313-1450

By hand: Customer Service Window
Mail Stop Petitions
Randolph Building
401 Dulany Street
Alexandria, VA 22314

By fax: (571) 273-8300
ATTN: Office of Petitions

Any questions concerning this matter may be directed to Senior Petitions Attorney Douglas I. Wood at (571) 272-3231.

Frances Hicks
Lead Paralegal
Office of Petitions

UNITED STATES PATENT AND TRADEMARK OFFICE

Commissioner for Patents
United States Patent and Trademark Office
P.O. Box 1450
Alexandria, VA 22313-1450
www.uspto.gov

RICHARD R. MICHAUD
THE MICHAUD-DUFFY GROUP, LLP
SUITE 206
306 INDUSTRIAL PARK ROAD
MIDDLETOWN CT 06457

COPY MAILED

JAN 30 2007

OFFICE OF PETITIONS

In re Application of	:
Coffin et al.	:
Application No. 10/367,133	: DECISION ON PETITION
Filed: 14 February, 2003	: UNDER 37 CFR 1.78(a)(3)
Attorney Docket No. 6579-60-1	:

This is a decision on the renewed petition under 37 CFR 1.78(a)(3), filed on 3 November, 2006, to accept an unintentionally delayed claim under 35 U.S.C. § 120 for the benefit of priority to the prior-filed nonprovisional application set forth in the amendment filed with the petition.

The petition is **GRANTED**.

A petition for acceptance of a claim for late priority under 37 CFR 1.78(a)(3) is only applicable to those applications filed on or after November 29, 2000. Further, the petition is appropriate only after the expiration of the period specified in 37 CFR 1.78(a)(2)(ii). In addition, the petition under 37 CFR 1.78(a)(3) must be accompanied by:

(1) the reference required by 35 U.S.C. § 120 and 37 CFR 1.78(a)(2)(i) of the prior-filed application, unless previously submitted;
(2) the surcharge set forth in § 1.17(t); and
(3) a statement that the entire delay between the date the claim was due under 37 CFR 1.78(a)(2)(ii) and the date the claim was filed was unintentional. The Director may require additional information where there is a question whether the delay was unintentional.

All of the above requirements having been satisfied, the late claim for priority under 35 U.S.C. § 120 is accepted as being unintentionally delayed.

The granting of the petition to accept the delayed benefit claim to the prior-filed application under 37 CFR 1.78(a)(3) should not be construed as meaning that this application is entitled to the benefit of the prior-filed application. In order for this application to be entitled to the benefit of the prior-filed application, all other requirements under 35 U.S.C. § 120 and 37 CFR 1.78(a)(1) and (a)(2) must be met. Similarly, the fact that the corrected Filing Receipt accompanying this decision on petition includes the prior-filed application should not be construed as meaning that applicant is entitled to the claim for benefit of priority to the prior-filed application noted thereon. Accordingly, the examiner will, in due course, consider this benefit claim and determine whether the application is entitled to the benefit of the earlier filing date.

A corrected Filing Receipt, which includes the priority claim to the prior-filed nonprovisional application, accompanies this decision on petition.

Any inquiries concerning this decision may be directed to Patent Attorney Douglas I. Wood at (571) 272-3231. All other inquiries concerning either the examination procedures or status of the application should be directed to the Technology Center.

This application is being forwarded to Technology Center Art Unit 3724 for consideration by the examiner of applicant's entitlement to claim benefit of priority under 35 U.S.C. § 120 to the prior-filed applications.

Christina Tartera Donnell

Christina Tartera Donnell
Senior Petitions Attorney
Office of Petitions

ATTACHMENT: Corrected Filing Receipt

UNITED STATES PATENT AND TRADEMARK OFFICE

UNITED STATES DEPARTMENT OF COMMERCE
United States Patent and Trademark Office
Address: COMMISSIONER FOR PATENTS
P.O. Box 1450
Alexandria, Virginia 22313-1450
www.uspto.gov

APPL NO.	FILING OR 371 (c) DATE	ART UNIT	FIL FEE REC'D	ATTY.DOCKET NO	DRAWINGS	TOT CLMS	IND CLMS
10/367,133	02/14/2003	3724	1096	6579-0060-1	4	32	3

CONFIRMATION NO. 1435

CORRECTED FILING RECEIPT

OC000000022212737

Richard R. Michaud
The Michaud-Duffy Group, LLP
Suite 206
306 Industrial Park Road
Middletown, CT 06457

Date Mailed: 01/29/2007

Receipt is acknowledged of this regular Patent Application. It will be considered in its order and you will be notified as to the results of the examination. Be sure to provide the U.S. APPLICATION NUMBER, FILING DATE, NAME OF APPLICANT, and TITLE OF INVENTION when inquiring about this application. Fees transmitted by check or draft are subject to collection. Please verify the accuracy of the data presented on this receipt. **If an error is noted on this Filing Receipt, please mail to the Commissioner for Patents P.O. Box 1450 Alexandria Va 22313-1450. Please provide a copy of this Filing Receipt with the changes noted thereon. If you received a "Notice to File Missing Parts" for this application, please submit any corrections to this Filing Receipt with your reply to the Notice. When the USPTO processes the reply to the Notice, the USPTO will generate another Filing Receipt incorporating the requested corrections (if appropriate).**

Applicant(s)

David Coffin, Hamden, CT;
David Dombrowski, Madison, CT;
Glennis J. Orloff, Woodbridge, CT;
Mark S. Peyser, Easton, CT;

Assignment For Published Patent Application

Warner-Lambert Company, Morris Plains, NJ

Power of Attorney:

Michael Kinney--42740
Richard Michaud--40088
Wayne Grohs--48945

Domestic Priority data as claimed by applicant

This appln claims benefit of 60/375,843 04/24/2002
and is a CIP of 09/505,408 02/16/2000 PAT 6,584,690

Foreign Applications

If Required, Foreign Filing License Granted: 04/28/2003

The country code and number of your priority application, to be used for filing abroad under the Paris Convention, is
US10/367,133

Projected Publication Date: Not Applicable

Non-Publication Request: No

Early Publication Request: No

Title

Replacement cartridge for a razor assembly

Preliminary Class

030

PROTECTING YOUR INVENTION OUTSIDE THE UNITED STATES

Since the rights granted by a U.S. patent extend only throughout the territory of the United States and have no effect in a foreign country, an inventor who wishes patent protection in another country must apply for a patent in a specific country or in regional patent offices. Applicants may wish to consider the filing of an international application under the Patent Cooperation Treaty (PCT). An international (PCT) application generally has the same effect as a regular national patent application in each PCT-member country. The PCT process **simplifies** the filing of patent applications on the same invention in member countries, but **does not result** in a grant of "an international patent" and does not eliminate the need of applicants to file additional documents and fees in countries where patent protection is desired.

Almost every country has its own patent law, and a person desiring a patent in a particular country must make an application for patent in that country in accordance with its particular laws. Since the laws of many countries differ in various respects from the patent law of the United States, applicants are advised to seek guidance from specific foreign countries to ensure that patent rights are not lost prematurely.

Applicants also are advised that in the case of inventions made in the United States, the Director of the USPTO must issue a license before applicants can apply for a patent in a foreign country. The filing of a U.S. patent application serves as a request for a foreign filing license. The application's filing receipt contains further information and guidance as to the status of applicant's license for foreign filing.

Applicants may wish to consult the USPTO booklet, "General Information Concerning Patents" (specifically, the section entitled "Treaties and Foreign Patents") for more information on timeframes and deadlines for filing foreign patent applications. The guide is available either by contacting the USPTO Contact Center at 800-786-9199, or it can be viewed on the USPTO website at http://www.uspto.gov/web/offices/pac/doc/general/index.html.

For information on preventing theft of your intellectual property (patents, trademarks and copyrights), you may wish to consult the U.S. Government website, http://www.stopfakes.gov. Part of a Department of Commerce initiative, this website includes self-help "toolkits" giving innovators guidance on how to protect intellectual property in specific countries such as China, Korea and Mexico. For questions regarding patent enforcement issues, applicants may call the U.S. Government hotline at 1-866-999-HALT (1-866-999-4158).

LICENSE FOR FOREIGN FILING UNDER
Title 35, United States Code, Section 184
Title 37, Code of Federal Regulations, 5.11 & 5.15

GRANTED

The applicant has been granted a license under 35 U.S.C. 184, if the phrase "IF REQUIRED, FOREIGN FILING LICENSE GRANTED" followed by a date appears on this form. Such licenses are issued in all applications where the conditions for issuance of a license have been met, regardless of whether or not a license may be required as set forth in 37 CFR 5.15. The scope and limitations of this license are set forth in 37 CFR 5.15(a) unless an earlier license has been issued under 37 CFR 5.15 (b). The license is subject to revocation upon written notification. The date indicated is the effective date of the license, unless an earlier license of similar scope has been granted under 37 CFR 5.13 or 5.14.

This license is to be retained by the licensee and may be used at any time on or after the effective date thereof unless it is revoked. This license is automatically transferred to any related applications(s) filed under 37 CFR 1.53(d). This license is not retroactive.

The grant of a license does not in any way lessen the responsibility of a licensee for the security of the subject matter as imposed by any Government contract or the provisions of existing laws relating to espionage and the national security or the export of technical data. Licensees should apprise themselves of current regulations especially with respect to certain countries, of other

agencies, particularly the Office of Defense Trade Controls, Department of State (with respect to Arms, Munitions and Implements of War (22 CFR 121-128)); the Bureau of Industry and Security, Department of Commerce (15 CFR parts 730-774); the Office of Foreign Assets Control, Department of Treasury (31 CFR Parts 500+) and the Department of Energy.

NOT GRANTED

No license under 35 U.S.C. 184 has been granted at this time, if the phrase "IF REQUIRED, FOREIGN FILING LICENSE GRANTED" DOES NOT appear on this form. Applicant may still petition for a license under 37 CFR 5.12, if a license is desired before the expiration of 6 months from the filing date of the application. If 6 months has lapsed from the filing date of this application and the licensee has not received any indication of a secrecy order under 35 U.S.C. 181, the licensee may foreign file the application pursuant to 37 CFR 5.15(b).

UNITED STATES PATENT AND TRADEMARK OFFICE

Commissioner for Patents
United States Patent and Trademark Office
P.O. Box 1450
Alexandria, VA 22313-1450
www.uspto.gov

MAILED

APR 27 2007

Technology Center 2100

Mark Lauer 9
6601 Koll Center Parkway
Pleasanton CA 94566

In re Application of:
S. Blightman, et al.
Application No. 10/367,147
Filed: February 12, 2003
For: Network Interface Device for Error Detection Using Partial CRCS of Variable Length Message Portions

DECISION ON PETITION UNDER 37 C.F.R. § 1.181

This is a decision on the petition filed July 13, 2006 under 37 CFR § 1.181 to invoke Supervisory Authority of the Commissioner and require the Examiner to withdraw the claim 18 objection under 37 CFR 1.75 mailed February 13, 2006.

In the petition, applicant's counsel alleged that the claim objection of claim 18 under 37 CFR 1.75 for failing to further limit claim 17 was improper as claim 18 added additional limitations.

On 19 October 2006, an office action was mailed out indicating that the claim objection of the February 13, 2006 action is withdrawn.

Accordingly, the petition is **DISMISSED AS MOOT.**

Any inquiry concerning this decision should be directed to the undersigned whose telephone number is (571) 272-3612.

Tod Swann
Workgroup Quality Assurance Specialist
Technology Center 2100
Computer Architecture, Software, and Information Security

Organization TC2100 Bldg/Room RANDOLPH
United States Patent and Trademark Office
P.O. Box 1450
Alexandria, VA 22313-1450
If Undeliverable Return in Ten Days

OFFICIAL BUSINESS
PENALTY FOR PRIVATE USE, $300

AN EQUAL OPPORTUNITY EMPLOYER

MAY 15 2007
USPTO MAIL CENTER

UNITED STATES PATENT AND TRADEMARK OFFICE

Commissioner for Patents
United States Patent and Trademark Office
P.O. Box 1450
Alexandria, VA 22313-1450
www.uspto.gov

OIPE
MAY 11 2007
PATENT & TRADEMARK OFFICE

MAILED

APR 27 2007

Technology Center 2100

Mark Lauer 9
6601 Koll Center Parkway
Pleasanton CA 94566

In re Application of:
S. Blightman, et al.
Application No. 10/367,147
Filed: February 12, 2003
For: Network Interface Device for Error Detection Using Partial CRCS of Variable Length Message Portions

DECISION ON PETITION UNDER 37 C.F.R. § 1.181

This is a decision on the petition filed July 13, 2006 under 37 CFR § 1.181 to invoke Supervisory Authority of the Commissioner and require the Examiner to withdraw the claim 18 objection under 37 CFR 1.75 mailed February 13, 2006.

In the petition, applicant's counsel alleged that the claim objection of claim 18 under 37 CFR 1.75 for failing to further limit claim 17 was improper as claim 18 added additional limitations.

On 19 October 2006, an office action was mailed out indicating that the claim objection of the February 13, 2006 action is withdrawn.

Accordingly, the petition is **DISMISSED AS MOOT.**

Any inquiry concerning this decision should be directed to the undersigned whose telephone number is (571) 272-3612.

Tod Swann
Workgroup Quality Assurance Specialist
Technology Center 2100
Computer Architecture, Software, and Information Security

UNITED STATES PATENT AND TRADEMARK OFFICE

COMMISSIONER FOR PATENTS
UNITED STATES PATENT AND TRADEMARK OFFICE
P.O. BOX 1450
ALEXANDRIA, VA 22313-1450
www.uspto.gov

MAILED
FROM DIRECTORS OFFICE

JAN 26 2006

TECHNOLOGY CENTER 3600

G.F. Gallinger
7420 Milner Dr.
Colorado Springs, CO 80920

In re Application of
Reid Albert Franklin, et al.
Application No. 10/367,158
Filed: February 19, 2003
For: GRIPPING RIDING SPURS

DECISION ON PETITION TO WITHDRAW THE HOLDING OF ABANDONMENT

This is a decision on applicants' petition to withdraw the holding of abandonment filed in the United States Patent and Trademark Office on September 17, 2004.

The petition is **GRANTED**.

A review of the file record reveals that an Office action was mailed on December 29, 2003, with a three-month shortened statutory period for response. The application was held abandoned for failure to timely respond to the Office action mailed on December 29, 2003, and a Notice of Abandonment was mailed on November 2, 2004.

Applicants contend that the December 29, 2003 Office Action was never received.

A further review of the application file record reveals that the Office Action mailed December 29, 2003, while properly addressed, was returned to the USPTO on January 8, 2004, as "undelivered".

Since the Office action was properly addressed, and was not delivered, applicants' petition to withdraw the holding of abandonment is **granted**.

The application is being forwarded to the Supervisory Legal Instruments Examiner with instructions to withdraw the holding of abandonment, and restore the application to pending status before re-dating and re-mailing the Office action (non-final rejection) previously mailed on December 29, 2003.

For

Randolph A. Reese
Special Programs Examiner
Technology Center 3600
(703) 308-2121

RAR/rwg: 2/02/05

UNITED STATES PATENT AND TRADEMARK OFFICE

UNITED STATES DEPARTMENT OF COMMERCE
United States Patent and Trademark Office
Address: COMMISSIONER FOR PATENTS
P.O. Box 1450
Alexandria, Virginia 22313-1450
www.uspto.gov

TOWNSEND AND TOWNSEND AND CREW LLP/ORACLE
TWO EMBARCADERO CENTER
8TH FLOOR
SAN FRANCISCO, CA 94111-3834

Mail Date: 04/21/2010

Applicant	: Philip B. Griffin	: DECISION ON REQUEST FOR
Patent Number	: 7591000	: RECALCULATION of PATENT
Issue Date	: 09/15/2009	: TERM ADJUSTMENT IN VIEW
Appliction No	: 10/367,177	: OF WYETH AND NOTICE OF INTENT TO
Filed	: 02/14/2003	: ISSUE CERTIFICATE OF CORRECTION
		:

The Request for Recalculation is **GRANTED** to the extent indicated.

The patent term adjustment has been determined to be **895** days. The USPTO will *sua sponte* issue a certificate of correction reflecting the amount of PTA days determined by the recalculation.

Prior to the issuance of the certificate of correction, the USPTO will afford patentee an opportunity to be heard and request reconsideration. Accordingly, patentee has **one month or thirty (30) days**, whichever is longer, to file a request for reconsideration of this patent term adjustment calculation. See 35 U.S.C. 154(b)(3)(B)(ii) and 37 CFR 1.322(a)(4). No extensions of time will be granted under 37 CFR 1.136.

Patentee should use document code PET.OP if electronically filing a request for reconsideration of this patent term adjustment calculation. The patentee must also include the information required by 37 CFR 1.705(b)(2) and the fee required by 37 CFR 1.18(e). If patentee does not file a timely request for reconsideration of this patent term adjustment calculation including the information required by 37 CFR 1.705(b)(2) and the fee required by 37 CFR 1.18(e), the USPTO will issue a certificate of correction reflecting the PTA determination noted above.

Patentee should be aware that in order to preserve the right to review in the United States District Court for the District of Columbia of the USPTO patent term adjustment determination, patentee must ensure that he or she also take the steps required under 35 U.S.C. 154(b)(4)(A) in a timely manner. Nothing in the request for recalculation should be construed as providing an alternative time frame for commencing a civil action under 35 U.S.C. 154(b)(4)(A).

Any questions concerning this decision should be directed to the Office of Patent Legal Administration at 571-272-7702.

UNITED STATES PATENT AND TRADEMARK OFFICE

Commissioner for Patents
United States Patent and Trademark Office
P.O. Box 1450
Alexandria, VA 22313-1450
www.uspto.gov

Brinks Hofer Gilson & Lione
PO Box 10395
Chicago, Illinois 60610

COPY MAILED

JUL 1 1 2005

OFFICE OF PETITIONS

In re Application of
Mendolia et al.
Application No. 10/367,179
Filed: February 14, 2003
Attorney Docket No. 10599/86

: DECISION GRANTING PETITION

This decision is in response to applicants' "REQUEST FOR RECONSIDERATION OF PATENT TERM ADJUSTMENT UNDER 37 CFR § 1.705(b)" timely[1] filed on October 25, 2004 requesting that the Office remove an reduction assessed against applicants for failing to reply to the office action within three months as required under 37 CFR 1.704(b).

Applicants' request for reconsideration is **GRANTED** to the extent herein indicated. The Office will adjust the PTA calculation to take this decision into consideration.

Applicants assert that they responded to the Notice to File Missing Parts within three months and accordingly the thirty-four day reduction is in error. Applicant further allege that there was no delay on the part of the Office and accordingly the overall determination should be zero days.

Applicants arguments are persuasive to the extent herein outline. The Office agrees with applicants that applicants did not fail to respond to the notice to file missing parts within three months.[2] Accordingly, the thirty-four days of applicants delay are in error. Applicants did however fail to engage when applicants submitted a noncompliant amendment on August 4, 2004 which was corrected on August 30, 2004. See 37 CFR 1.704(c)(7).[3] Accordingly applicants did fail to engage in reasonable efforts to conclude prosecution of the application by a period of twenty-six (26) days. Applicants assertion that the Office did not delay is unpersuasive because contrary to applicants assertion, the Office did fail to respond to applicant within fourteen months

[1]Issue fee paid on 10/25/2004.

[2]The Office mailed a Notice to File Missing Parts on April 24, 2003 that was responded to on June 26, 2003.

[3]The delay began the day after the initial response and ended on the date of response by applicants that corrected the noncompliant amendment.

of the filing date of the application.[4] Accordingly, Office delay amounted to twenty days.[5] Overall, the PTA is zero days (20-26=0). [6]

After the mailing of this decision, the application will be forwarded to the Office of Patent Publication for a prompt issuance of the patent application. Any delays in issuing the patent more than four months after the payment of the issue fee will be reflected in the PTA determination that is mailed with the issue notification letter approximately three weeks prior to the issuance of the application.

The Office acknowledges the payment of the $200.00 fee. No additional fees are required for this request for reconsideration.

Any questions concerning this decision should be directed to Kery Fries, Senior Legal Advisor, Office of Patent Legal Administration, Office of Deputy Commissioner for Patent Examination Policy at 571-272-7757.

Kery A Fries

Karin Ferriter

Office of Deputy Commissioner
for Patent Examination Policy

cc: adjusted PAIR calculation

---

[4]The application filed on February 14, 2003 should have been responded to by April 14, 2003. The Office did not respond to such application until May 4, 2004, a twenty day delay.

[5]The Office is unsure how applicants determined that the 14 month day is November 30, 2004. The actual date of response needed to occur on/before is April 14, 2004.

[6]Note that applicants actually have a negative balance of six days. Accordingly, in order for applicant to receive any positive PTA, the Office must delay after the mailed notice of allowance by a period of seven days or more.

UNITED STATES PATENT AND TRADEMARK OFFICE

Commissioner for Patents
United States Patent and Trademark Office
P.O. Box 1450
Alexandria, VA 22313-1450
www.uspto.gov

TOWNSEND AND TOWNSEND AND CREW, LLP
TWO EMBARCADERO CENTER
EIGHTH FLOOR
SAN FRANCISCO, CA 94111-3834

COPY MAILED

OCT 14 2005

OFFICE OF PETITIONS

In re Application of	:	
Eugene B. Hogenauer	:	
Application No. 10/367,188	:	DECISION ON PETITION
Filed: February 13, 2003	:	UNDER 37 CFR 1.137(b)
Attorney Docket No. 021202-0004110US	:	

This is a decision on the petition, filed August 30, 2004, which is being treated as a petition under 37 CFR 1.137(b) to revive the instant nonprovisional application for failure to timely notify the U.S. Patent and Trademark (USPTO) of the filing of an application in a foreign country, or under a multinational treaty that requires publication of applications eighteen months after filing. *See* 37 CFR 1.137(f).

The delay in responding to the instant petition is regretted.

The petition is **GRANTED**.

Petitioner states that the instant nonprovisional application is the subject of an application filed in an eighteen-month publication country on October 24, 2003. However, the USPTO was unintentionally not notified of this filing within 45 days subsequent to the filing of the subject application in an eighteen-month publication country.

In view of the above, this application became abandoned pursuant to 35 U.S.C. § 122(b)(2)(B)(iii) and 37 CFR 1.213(c) for failure to timely notify the Office of the filing of an application in a foreign country or under a multilateral international agreement that requires publication of applications 18 months after filing.

A petition to revive an application abandoned pursuant to 35 U.S.C. 122(b)(2)(B)(iii) for failure to notify the USPTO of a foreign filing must be accompanied by:

(1) the required reply, which is met by the notification of such filing in a foreign country or under a multinational treaty;
(2) the petition fee as set forth in 37 CFR 1.17(m); and
(3) a statement that the entire delay in filing the required reply from the due date of the reply until the filing of a grantable petition was unintentional.

The instant petition has been found to be in compliance with 37 CFR 1.137(b). Accordingly, the failure to timely notify the USPTO of a foreign or international filing within 45 days after the date of filing of such foreign or international application as provided by 35 U.S.C. § 122(b)(2)(B)(iii) and 37 CFR 1.213(c) is accepted as having been unintentionally delayed.

The previous Request and Certification under 35 U.S.C. § 122(b)(2)(B)(i) has been rescinded. A Notice Regarding Rescission of Nonpublication Request which sets forth the projected publication date of January 19, 2006 accompanies this decision.

The application file does not indicate a change of address has been filed, although the address given on the petition differs from the address of record. If appropriate, a change of address should be filed in accordance with MPEP 601.03. A courtesy copy of this decision is being mailed to the address noted on the petition. However, until otherwise instructed, all future correspondence regarding this application will be mailed solely to the address of record.

Telephone inquiries concerning this decision should be directed to the undersigned at (571) 272-3226.

This application is being referred to Technology Center Art Unit 2183 for examination in due course.

Andrea Smith
Petitions Examiner
Office of Petitions

ATTACHMENT: Notice Regarding Rescission of Nonpublication Request

cc: Charles J. Kulas
Carpenter & Kulas, LLP
1900 Embarcadero Road – St. 109
Palo Alto, CA 94303

UNITED STATES PATENT AND TRADEMARK OFFICE

Commissioner for Patents
United States Patent and Trademark Office
P.O. Box 1450
Alexandria, VA 22313-1450
www.uspto.gov

PATTERSON & SHERIDAN, L.L.P.
3040 POST OAK BOULEVARD
SUITE 1500
HOUSTON, TX 77056

COPY MAILED

JUN 1 8 2007

OFFICE OF PETITIONS

In re Application of
Eugene B. Hogenauer
Application No. 10/367,188
Filed: February 13, 2003
Attorney Docket No. NVDA/P002848

ON PETITION

This is a decision on the petition under 37 CFR 1.137(b), filed on September 23, 2006, to revive the above-identified application.

The application became abandoned for failure to respond to the non-final Office action mailed October 28, 2005. A Notice of Abandonment was mailed on June 19, 2006.

The petition satisfies the requirements of 37 CFR 1.137(b), in that, petitioner has supplied (1) the reply in the form of an amendment; (2) the petition fee of $750; and (3) an adequate statement of unintentional delay. Therefore, the petition is **GRANTED**.

The Revocation of Power of Attorney with New Power of Attorney and Change of Correspondence Address filed on March 13, 2007, has been accepted and made of record. Therefore, a courtesy copy of this decision is being forwarded to the address listed on the instant petition.

This application file is being referred to Technology Center Art Unit 2183, for review of the amendment filed with the instant petition.

Telephone inquiries concerning this decision should be directed to the undersigned at (571) 272-3226.

Andrea Smith
Petitions Examiner
Office of Petitions

cc: GAMBURD LAW GROUP, LLC
600 WEST JACKSON BLVD.
SUITE 625
CHICAGO, IL 60661

UNITED STATES PATENT AND TRADEMARK OFFICE

COMMISSIONER FOR PATENTS
UNITED STATES PATENT AND TRADEMARK OFFICE
PO BOX 1450
ALEXANDRIA, VA 22313-1450
www.uspto.gov

Paper No. 6

COPY MAILED

SEP 15 2003

OFFICE OF PETITIONS

PENNIE AND EDMONDS
1155 AVENUE OF THE AMERICAS
NEW YORK NY 10036-2711

In re Application of PARKIN et al. Application No. 10/367,223 Filed: February 13, 2003 Attorney Docket No. 011068-026-999	DECISION DISMISSING PETITION

This is a decision on the petition under 37 CFR 1.182, filed August 4, 2003, requesting that the application be accorded a filing date of February 13, 2003, with Figures 12A and 12B as part of the original disclosure.

On February 13, 2003, the above-identified application was filed. However, on June 4, 2003, the Office of Initial Patent Examination mailed a Notice to File Missing Parts of Nonprovisional Application, stating that the application had been accorded a filing date of February 13, 2003, and requiring applicants to submit an executed oath or declaration and a surcharge for the late filing. Additionally, the Notice indicated that Figures 12A and 12B described in the specification appeared to have been omitted.

In response, on August 4, 2003, applicants filed an executed declaration, the present petition and the requisite fees. Applicants explained:

> Applicants submit that Figure 12 as submitted comprised, and clearly identified SEQ. ID. NO: 1, the amino acid sequence of the NL4-3 HIV and SEQ. ID. NO. 2, the nucleic acid sequence for the NL4-3 HIV. Applicants submit that although Figure 12 as originally filed was not split up into Figure 12A and Figure 12B, that every mention in the specification of Figure 12A was accompanied by a reference to SEQ. ID. NO: 1 and every mention in the specification of Figure 12B was accompanied by a reference to SEQ. ID. NO: 2, (see page 14, line 3-6 and page 49, lines 30-32). Accordingly, Applicants petition that the subject matter of Figures 12A and 12B were submitted to the USPTO.

Petition dated 08/04/03, pp. 1. The present petition is accompanied by a copy of Figures 12A and 12B.

It is obvious from the petition that no drawing was actually missing on February 13, 2003. Rather, the drawing of Figures 12A and 12B were simply mislabeled as a result of applicants' filing error. However, the Notice of Missing Parts mailed June 4, 2003, was correct in stating that Figures 12A and 12B described in the

specification appeared to have been omitted. Therefore, the requirement to submit the omitted figures set forth in the Notice of Missing Parts will not be withdrawn.

Accordingly, the petition is dismissed.

The $130.00 petition fee will be charged to Deposit Account No. 16-1150 because the present petition was not necessitated by any error on the part of the United States Patent and Trademark Office. Additionally, the $65.00 surcharge for the late filing of the declaration will be charged to the Deposit Account.

The application is being returned to the Office of Initial Patent Examination for further processing with a filing date of February 3, 2003, using the drawings filed on that date.

Thereafter, the application file will be forwarded to Technology Center AU 3640 for review of the petition under 37 CFR 5.25.

Any inquiries related to this decision should be directed to the undersigned at (703) 306-5589.

Christina Tartera Donnell

Christina Tartera Donnell
Petitions Attorney
Office of Petitions

UNITED STATES PATENT AND TRADEMARK OFFICE

COMMISSIONER FOR PATENTS
UNITED STATES PATENT AND TRADEMARK OFFICE
P.O. BOX 1450
ALEXANDRIA, VA 22313-1450
www.uspto.gov
DIW 08-03

Paper No. 7

DANIEL L. GIRDWOOD
PRICE HENEVELD, COOPER, DEWITT & LITTON
695 KENMOOR SE
P.O. BOX 2567
GRAND RAPIDS, MI 49501-2567

COPY MAILED

SEP 1 6 2003

OFFICE OF PETITIONS

In re Application of	:	
MacDonald et al.	:	
Application No. 10/367,249	:	ON PETITION
Filed: 14 February, 2003	:	
Attorney's Docket No. STE01 P-1150	:	

This is a decision on the petition filed on 18 August, 2003, requesting that the above-identified application be accorded a filing date of 14 February, 2003, with Page 53 of the specification as a part of the original disclosure.

The petition is granted.

The application was filed on 14 February, 2003. However, on 3 July, 2003, Initial Patent Examination Division mailed a "Notice" stating that the application had been accorded a filing date of 14 February, 2003, but that, *inter alia*, Page 53 of the specification (description and claims) appeared to have been omitted.

In response, on 18 August, 2003, a copy of the specification, the present petition, and a petition fee were filed. Petitioners argue that Page 53 was filed with the other application papers on 14 February, 2003, but was subsequently misplaced in the U.S. Patent and Trademark Office (Office). In support, a copy of petitioners' postcard receipt was supplied with the present petition. The postcard receipt shows an Office date stamp of 14 February, 2003, and the above-identified application number, and acknowledges receipt of, *inter alia*, 49 pages of specification and 9 pages of claims. Petitioners request that the application, including Page 53 of the specification containing claims, be accorded a filing date of 14 February, 2003.

A review of the record reveals that no Page 53 of the specification has been located among the application papers deposited on 14 February, 2003. However, the evidence is

convincing that the application papers deposited on 14 February, 2003, included Page 53 of the specification containing claims, which was subsequently misplaced in the Office. Therefore, the application, including Page 53 of the specification containing claims, is entitled to a filing date of 14 February, 2003.

The "Notice" mailed on 3 July, 2003, is vacated to the extent that it stated that Page 53 of the specification appeared to have been omitted.

In view of the above, the petition is granted. The petition fee is unnecessary and will be credited to counsel's deposit account, No. 16-2463, as authorized in the application papers filed on 14 February, 2003.

The application will be processed and examined using the copy of Page 53 supplied on 18 August, 2003. The copies of the other application papers filed with the present petition will not be used for processing or examination, but will be retained in the official file.

Petitioners should note, when preparing future filings, that the postcard receipt should itemize the total number of pages of specification (including written description, claims, and abstract) as a single figure.[1]

The application is being returned to Initial Patent Examination Division for further processing with a filing date of 14 February, 2003, using the application papers filed on that date, and the copy of Page 53 supplied with the present petition.

Telephone inquires should be directed to the undersigned at 703 308-6918.

D Wood

Douglas I. Wood
Senior Petitions Attorney
Office of Petitions

---

[1] MPEP 503.

UNITED STATES PATENT AND TRADEMARK OFFICE

Commissioner for Patents
United States Patent and Trademark Office
P.O. Box 1450
Alexandria, VA 22313-1450
www.uspto.gov

MAILED
FROM DIRECTORS OFFICE
JAN 12 2006
TECHNOLOGY CENTER 3600

Daniel L. Girdwood
PRICE HENEVELD, COOPER, DEWITT & LITTON
695 Kenmoor SE
PO Box 2567
Grand Rapids MI 49501-2567

In re Application of
David J. Battey et al.
Application No. 10/367,249
Filed: February 14, 2003
For: CUSTOMIZABLE PARTITION SYSTEM

DECISION ON PETITION TO WITHDRAW THE HOLDING OF ABANDONMENT

This is a decision on the Petition to Withdraw the Holding of Abandonment filed in the United States Patent and Trademark Office on July 21, 2005.

The petition is **GRANTED** in view of the following evidence of timely filing:

☐ Postcard receipt being dated _____.

☐ USPTO return facsimile receipt dated _____.

☐ Certificate of Mailing/Transmission signed on _____, and supported by a statement under 37 C.F.R. 1.8(b)(3).

☐ Hand Delivery Receipt of the specific documents submitted, dated _____.

☐ Certificate of Transmission of CPA under 37 C.F.R. 1.6 filed on _____.

☐ Express Mail Receipt under 37 C.F.R. 1.10 dated _____.

☒ Originally sent response, received December 20, 2004.

This application is being forwarded to the Supervisory Legal Instruments Examiner for withdrawal of the abandonment and then to the examiner for prompt action.

RAR/rjc: 09/29/05

KENNETH J. DORNER
SPECIAL PROGRAMS EXAMINER
TECHNOLOGY CENTER 3600

UNITED STATES PATENT AND TRADEMARK OFFICE

Commissioner for Patents
United States Patent and Trademark Office
P.O. Box 1450
Alexandria, VA 22313-1450
www.uspto.gov

RICHARD R. MICHAUD
THE MICHAUD - DUFFY GROUP
306 INDUSTRIAL PARK ROAD
SUITE 206
MIDDLETOWN CT 06457

COPY MAILED

JUL 11 2006

OFFICE OF PETITIONS

In re Application of	:	
Andrew J. Pennella et al	:	
Application No. 10/367,255	:	ON PETITION
Filed: February 14, 2003	:	
Attorney Docket No. 6579-87-1 (PC-25252PROV2)	:	

This is a decision on the petition, filed June 28, 2006, under 37 CFR 1.313(c)(2) to withdraw the above-identified application from issue after payment of the issue fee.

The petition is **GRANTED**.

The above-identified application is withdrawn from issue for consideration of a submission under 37 CFR 1.114 (request for continued examination). See 37 CFR 1.313(c)(2).

Petitioner is advised that the issue fee paid on June 21, 2006, in the above-identified application cannot be refunded. If, however, the above-identified application is again allowed, petitioner may request that it be applied towards the issue fee required by the new Notice of Allowance.[1]

Telephone inquiries should be directed to the undersigned at (571) 272-3208.

The examiner of Technology Center AU 3724 will consider the request for continued examination under 37 CFR 1.114.

Karen Creasy
Petitions Examiner
Office of Petitions

---

[1] The request to apply the issue fee to the new Notice may be satisfied by completing and returning the new Issue Fee Transmittal Form PTOL-85(b), which includes the following language thereon: "Commissioner for Patents is requested to apply the Issue Fee and Publication Fee (if any) or re-apply any previously paid issue fee to the application identified above." Petitioner is advised that, whether a fee is indicated as being due or not, the Issue Fee Transmittal Form **must** be completed and timely submitted to avoid abandonment. Note the language in bold text on the first page of the Notice of Allowance and Fee(s) Due (PTOL-85).

UNITED STATES PATENT AND TRADEMARK OFFICE

Commissioner for Patents
United States Patent and Trademark Office
P.O. Box 1450
Alexandria, VA 22313-1450
www.uspto.gov

RICHARD R. MICHAUD
THE MICHAUD - DUFFY GROUP, LLP
306 INDUSTRIAL PARK ROAD
SUITE 206
MIDDLETOWN CT 06457

COPY MAILED

JUN 22 2007

OFFICE OF PETITIONS

In re Application of	:	
Pennellae et al.	:	
Application No. 10/367,255	:	ON PETITION
Filed: February 14, 2003	:	
Attorney Docket No. 6579-87-1 (PC-25252PROV2)	:	

This is a decision on the petition under 37 CFR §1.182 Addressing Question Not Provided For in the Regulations. This petition is appropriately treated as a petition to withdraw the holding of abandonment, filed October 11, 2006.

The petition filed under 37 CFR 1.182 is **DISMISSED**.

The petition to withdraw the holding of abandonment is **GRANTED**.

The issue payment was received in the Office on June 21, 2006. A Request for Continued Examination was filed on June 28, 2006. A petition to withdraw the application from issuance was granted on July 11, 2006. A Notice of Improper Request for Continued Examination (RCE) mailed on July 20, 2006 stated the time reply period ran from the period established in the Notice of Allowance which ended on June 21, 2006. Accordingly this application was held abandoned on June 22, 2006. This decision precedes the mailing of a Notice of Abandonment.

A review of the record shows that the Notice of Improper Request for Continued Examination was mailed because a submission as required by 37 CFR 1.114 was not provided with the request for the RCE. The submission submitted with the RCE on June 28, 2006 was a petition under 37 CFR 1.48.

Pursuant to 37 CFR 1.114, a submission as used in this section includes, but is not limited to, an information disclosure statement, an amendment to the written description, claims, or drawings, new arguments, or new evidence in support of patentability. If reply to an Office action under 35 U.S.C. 132 is outstanding, the submission must meet the reply requirements of § 1.111.

In this instance the submission of the petition under 37 CFR 1.48 would satisfy the submission requirement for an RCE because there is no reply to an Office action outstanding.

The Notice of Abandonment is hereby vacated and the holding of abandonment is withdrawn.

This application is being forwarded to Art Unit 3724 for further processing of the RCE and petition under 37 CFR 1.48.

Telephone inquiries concerning this matter should be directed to the undersigned at (571) 272-3215.

Charlema R. Grant

Charlema R. Grant
Petitions Attorney
Office of Petitions

UNITED STATES PATENT AND TRADEMARK OFFICE

Commissioner for Patents
United States Patent and Trademark Office
P.O. Box 1450
Alexandria, VA 22313-1450
www.uspto.gov

COPY MAILED

OCT 07 2009

OFFICE OF PETITIONS

KING & SPALDING LLP
P.O. BOX 889
BELMONT CA 94002-0889

In re Application of	:	
Roberto Crea	:	
Application No. 10/367,308	:	DECISION ON PETITION
Filed: February 13, 2003	:	
Attorney Docket No. 52740-8003.US00	:	

This is a decision on the petition under the unintentional provisions of 37 CFR 1.137(b), filed August 18, 2009, to revive the above-identified application.

The petition is **GRANTED**.

This application became abandoned as a result of petitioner's failure to file an appeal brief (and fee required by 37 CFR 41.20(b)(2))within the time period provided in 37 CFR 41.37(a)(1). No extensions of time under the provisions of 37 CFR 1.136(b) were obtained. As an appeal brief (and appeal brief fee) was not filed within two (2) months of the Notice of Appeal filed April 28, 2008, the appeal was dismissed and the proceedings as to the rejected claims were terminated. See 37 CFR 1.197(b). As no claim was allowed, the application became abandoned on June 29, 2008. *See* MPEP 1215.04. A Notice of Abandonment was mailed March 4, 2009.

The petition satisfies the requirements of 37 CFR 1.137(b) in that petitioner has supplied (1) the reply in the form of a Request for Continued Examination (RCE) and fee of $405.00, and the submission required by 37 CFR 1.114; (2) the petition fee of $810.00; and (3) a proper statement of unintentional delay.

It is not apparent whether the statement of unintentional delay was signed by a person who would have been in a position of knowing that the **entire** delay in filing the required reply from the due date for the reply until the filing of a grantable petition pursuant to 37 CFR 1.137(b) was unintentional. Nevertheless, in accordance with 37 CFR 10.18, the statement is accepted as constituting a certification of unintentional delay. However, in the event that petitioner has no knowledge that the delay was unintentional, petitioner must make such an inquiry to ascertain that, in fact, the delay was unintentional. If petitioner discovers that the delay was intentional, petitioner must notify the Office.

Telephone inquiries concerning this decision should be directed to the undersigned at (571) 272-7751.

This application is being referred to Technology Center AU 1615 for processing of the RCE and for appropriate action by the Examiner in the normal course of business on the amendment submitted on August 18, 2009 in accordance with 37 CFR 1.114.

Joan Olszewski

Joan Olszewski
Petitions Examiner
Office of Petitions

UNITED STATES PATENT AND TRADEMARK OFFICE

COMMISSIONER FOR PATENTS
UNITED STATES PATENT AND TRADEMARK OFFICE
P.O. BOX 1450
ALEXANDRIA, VA 22313-1450
www.uspto.gov

Paper No. 5

HOLLANDER LAW FIRM, P.L.C.
SUITE 305
10300 EATON PLACE
FAIRFAX, VA 22030

COPY MAILED

NOV 1 9 2003

OFFICE OF PETITIONS

In re Application of :
Derenthal et al. :
Application No. 10/367,321 :
Filed: February 14, 2003 :
Attorney Docket No. NBI-854B :

ON PETITION

This is a decision on the paper filed October 24, 2003, which is being treated in part as a petition under 37 CFR 1.10 to accord the above-identified application a filing date of February 14, 2003, instead of February 19, 2003.[1]

The petition is **granted**.

37 CFR 1.10(c) states,

> Any person . . . who can show that there is a discrepancy between the filing date accorded by the Office to the correspondence and the date of deposit as shown by the "date-in" . . . or other official USPS notation, may petition the Commissioner to accord the correspondence a filing date as of the "date-in" . . . or other official USPS notation, provided that:
>
> (1) The petition is filed promptly . . .
> (2) The number of the "Express Mail" mailing label was placed on the paper(s) or fee(s) that constitute the correspondence prior to the original mailing by "Express Mail;" and
> (3) The petition includes a true copy of the "Express Mail" mailing label showing the "date-in," and of any other official notation by the USPS relied upon to show the date of deposit.

All of the above requirements have been met. Therefore, the application will be accorded a filing date of February 14, 2003.

The file is now being forwarded to OPLA to render a decision on the Request for Republication filed on October 24, 2003.

Telephone inquiries should be directed to Petitions Attorney Steven Brantley at (703) 306-5683.

Charles Steven Brantley
Petitions Attorney
Office of Petitions

---

[1] The original petition cannot be located in the file of application no. 10/367,321. Therefore, this decision is based on the copy of the petition supplied on October 24, 2003.

UNITED STATES PATENT AND TRADEMARK OFFICE

COMMISSIONER FOR PATENTS
UNITED STATES PATENT AND TRADEMARK OFFICE
P.O. BOX 1450
ALEXANDRIA, VA 22313-1450
www.uspto.gov

HOLLANDER LAW FIRM, P.L.C.
SUITE 305
10300 EATON PLACE
FAIRFAX VA 22030

COPY MAILED

NOV 2 0 2003

OFFICE OF PETITIONS

Applicant: Derenthal et al.
Appl. No.: 10/367,321
Filing Date: February 14, 2003
Title: INFEED SYSTEM FOR A STACKING APPARATUS
Attorney Docket No.: NBI-854B
Pub. No.: US 2003/0123968 A1
Pub. Date: July 3, 2003

This is a decision on the request for corrected patent application publication under 37 CFR 1.221(b), filed on October 24, 2003 for above-identified application.[1]

The request is DISMISSED.

Applicant request that the application be republished because the patent application publication contains an error in the filing date, as the filing date is February 14, 2003 not February 19, 2002, which is on the front page of the publication.

37 CFR 1.221(b) is applicable "only when the Office makes a material mistake which is apparent from Office records." A material mistake must affect the public's ability to appreciate the technical disclosure of the patent application publication, to determine the scope of the patent application publication, or to determine the scope of the provisional rights that an applicant may seek to enforce upon issuance of a patent.[2] The instant request does not identify a material mistake in the publication made by the Office:

The error in the filing date on the first page of the publication is an Office mistake, but it is not a material mistake as required by 37 CFR 1.221(b). The error in the filing date is not a material mistake because the application is a continuation of an earlier pending U.S. application, which was still pending on February 19, 2003, thus the earliest effective U.S. filing date and the 35 U.S.C. 102(e) date of the application is at least July 5, 2000. Therefore, the error in the filing date on the front page of the publication does not affect the public's ability to appreciate the technical disclosure of the patent application publication, to determine the scope of the patent application publication or to determine the scope of the provisional rights that an applicant may seek to enforce upon issuance of a patent. The error also does not affect the use of the patent

[1]The original request for a corrected publication filed on July 15, 2003, as evidenced by the post card receipt cannot be located in the file of the application.

[2]Changes to Implement Eighteen-Month Publication of Patent Applications, 65 FR 57023, 57038 (Sept. 20, 2000), 1239 Off. Gaz. Pat. Office Notices 63, 75 (Oct. 10, 2000) (final rule).

application publication as a prior art reference, because the continuity data is correctly published.

The applicant is advised that a "request for republication of an application previously published" may be filed under 37 CFR 1.221(a). Such a request for republication "must include a copy of the application in compliance with the Office's electronic filing system requirements and be accompanied by the publication fee set forth in § 1.18(d) and the processing fee set forth in § 1.17(i)." If the request for republication does not comply with the electronic filing system requirements, the republication will not take place and the publication fee set forth in § 1.18(d) will be refunded. The processing fee will be retained.

Any request for republication under 37 CFR 1.221(b), should be submitted via the EFS system and questions or request for reconsideration of this decision, should be addressed as follows:

By mail to: Mail Stop PGPUB
Commissioner for Patents
P.O. Box 1450
Alexandria, VA 22313-1450

By facsimile: 703-305-8568

The application is being forwarded to Technology Center 3651 to await further examination in due course.

Inquiries relating to this matter may be directed to Mark Polutta at (703) 308-8122 (voice) or (703) 746-3465 (facsimile).

Mark Polutta
Legal Advisor
Office of Patent Legal Administration
Office of the Deputy Commissioner
for Patent Examination Policy

UNITED STATES PATENT AND TRADEMARK OFFICE

Commissioner for Patents
United States Patent and Trademark Office
P.O. Box 1450
Alexandria, VA 22313-1450
www.uspto.gov

John M. Benassi
P.O. Box 2016
Rancho Santa Fe CA 92067

COPY MAILED

JUN 0 5 2008

OFFICE OF PETITIONS

In re Application of :
Craig Kenton Stevens et al. :
Application No. 10/367,357 :
Filed: February 14, 2003 :
Attorney Docket No. Benassix :

ON PETITION

This is a decision on the renewed petition under the unintentional provisions of 37 CFR 1.137(b), filed October 16, 2007, to revive the above-identified application.

The petition is **DISMISSED**.

Any request for reconsideration of this decision must be submitted within TWO (2) MONTHS from the mail date of this decision. Extensions of time under 37 CFR 1.136(a) are permitted. The reconsideration request should include a cover letter entitled "Renewed Petition under 37 CFR 1.137(b)." This is **not** a final agency action within the meaning of 5 U.S.C. § 704.

The application became abandoned for failure to reply in a timely manner to the non-final Office action mailed July 13, 2004, which set a shortened statutory period for reply of three (3) months. No extensions of time under the provisions of 37 CFR 1.136(a) were obtained. Accordingly, the application became abandoned on October 14, 2004.

A grantable petition under 37 CFR 1.137(b) must be accompanied by: (1) the required reply, unless previously filed; (2) the petition fee as set forth in 37 CFR 1.17(m); (3) a statement that the entire delay in filing the required reply from the due date for the reply until the filing of a grantable petition pursuant to 37 CFR 1.137(b) was unintentional; and (4) any terminal disclaimer (and fee as set forth in 37 CFR 1.20(d)) required by 37 CFR 1.137(d). Where there is a question as to whether either the abandonment or the delay in filing a petition under 37 CFR 1.137 was unintentional, the Director may require additional information. See MPEP 711.03(c)(II)(C) and (D). The instant petition lacks item 3.

The Petition Decision mailed August 17, 2007 dismissed the petition filed November 3, 2006 for failure to provide item (3), a statement of unintentional delay.

The showing of record raises questions as to whether the abandonment of this application was unintentional within the meaning of 35 USC 41(a)(7) and CFR 1.137(b).

There are three periods to be considered during the evaluation of a petition under 37 CFR 1.137(b):

(1) the delay in reply that originally resulted in the abandonment;

(2) the delay in filing an initial petition pursuant to 37 CFR 1.137(b) to revive the application; and

(3) the delay in filing a grantable petition pursuant to 37 CFR 1.137(b) to revive the application.

Currently, the delay has not been shown to the satisfaction of the Director to be unintentional for periods (1) and (2).

As to Period (1):

The patent statute at 35 U.S.C. § 41(a)(7) authorizes the Director to revive an "unintentionally abandoned application." The legislative history of Public Law 97-247 reveals that the purpose of 35 U.S.C. § 41(a)(7) is to permit the Office to have more discretion than in 35 U.S.C. §§ 133 or 151 to revive abandoned applications in appropriate circumstances, but places a limit on this discretion, stating that "[u]nder this section a petition accompanied by either a fee of $500 or a fee of $50 would not be granted where the abandonment or the failure to pay the fee for issuing the patent was intentional as opposed to being unintentional or unavoidable." [emphasis added]. See H.R. Rep. No. 542, 97th Cong., 2d Sess. 6-7 (1982), reprinted in 1982 U.S.C.C.A.N. 770-71. The revival of an intentionally abandoned application is antithetical to the meaning and intent of the statute and regulation.

35 U.S.C. § 41(a)(7) authorizes the Commissioner to accept a petition "for the revival of an unintentionally abandoned application for a patent." As amended December 1, 1997, 37 CFR 1.137(b)(3) provides that a petition under 37 CFR 1.137(b) must be accompanied by a statement that the delay was unintentional, but provides that "[t]he Commissioner may require additional information where there is a question whether the delay was unintentional." Where, as here, there is a question whether the initial delay was unintentional, the petitioner must meet the burden of establishing that the delay was unintentional within the meaning of 35 U.S.C. § 41(a)(7) and 37 CFR 1.137(b). See In re Application of G, 11 USPQ2d 1378, 1380 (Comm'r Pats. 1989); 37 CFR 1.137(b). Here, in view of the inordinate delay in resuming prosecution (over two years), there is a question whether the entire delay was unintentional. Petitioner should note that the issue is not whether some of the delay was unintentional by any party; rather, the issue is whether the entire delay has been shown to the satisfaction of the Director to be unintentional.

The question under 37 CFR 1.137(b) for period (1) is whether the delay on the part of the party having the right or authority to reply to avoid abandonment (or not reply) was unintentional. The

renewed petition identifies John Benassi as the only person having the right to reply on behalf of the inventors to the Office action mailed July 13, 2004 to avoid abandonment. The renewed petition indicates that Benassi made no effort to reply to the Office action. Benassi appears to indicate that he was preoccupied with other matters although the petition does not indicate that he received the July 13, 2004 Office action, that he was aware a response was due or if he had made any effort to reply to the Office action. Petitioner's statement that he was preoccupied with other matters does not specifically address the questions raised in the Petition Decision of August 17, 2007 in regard to his efforts to avoid abandonment. Benassi has not explained why the delay in this application does not result from a deliberate course of action (or inaction). As the courts have made clear, it is pointless for the USPTO to revive a long abandoned application without an adequate showing that the delay did not result from a deliberate course of action. See Lawman Armor v. Simon, 2005 U.S. Dist. LEXIS 10843, 74 USPQ2d 1633 (DC EMich 2005); Field Hybrids, LLC v. Toyota Motor Corp., 2005 U.S. Dist. LEXIS 1159 (D. Minn Jan. 27, 2005); Lumenyte Int'l Corp. v. Cable Lite Corp., Nos. 96-1011, 96-1077, 1996 U.S. App. LEXIS 16400, 1996 WL 383927 (Fed. Cir. July 9, 1996) (unpublished) (patents held unenforceable due to a finding of inequitable conduct in submitting an inappropriate statement that the abandonment was unintentional).

As to Period (2):

Likewise, where the applicant deliberately chooses not to seek or persist in seeking the revival of an abandoned application, or where the applicant deliberately chooses to delay seeking the revival of an abandoned application, the resulting delay in seeking revival of the abandoned application cannot be considered as "unintentional" within the meaning of 37 CFR 1.137(b). See MPEP 711.03(c).

The language of both 35 USC 41(a)(7) and 37 CFR 1.137(b) are clear and unambiguous, and furthermore, without qualification. That is, the delay in filing the reply during prosecution, as well as in filing the petition seeking revival, must have been, without qualification, "unintentional" for the reply to now be accepted on petition. The Office requires that the entire delay be at least unintentional as a prerequisite to revival of an abandoned application to prevent abuse and injury to the public. See H.R. Rep. No. 542, 97th Cong., 2d Sess. 7 (1982), reprinted in 1982 U.S.C.C.A.N. 771 ("[i]n order to prevent abuse and injury to the public the Commissioner . . . could require applicants to act promptly after becoming aware of the abandonment"). The December 1997 change to 37 CFR 1.137 did not create any new right to overcome an intentional delay in seeking revival, or in renewing an attempt at seeking revival, of an abandoned application. See Changes to Patent Practice and Procedure; Final Rule Notice, 62 Fed. Reg. 53131, 53160 (October 10, 1997), 1203 Off. Gaz. Pat. Office 63, 87 (October 21, 1997), which clearly stated clear that any protracted delay (here, over 2 years) could trigger, as here, a request for additional information. As the courts have since made clear, a protracted delay in seeking revival, as here, requires a petitioner's detailed explanation seeking to excuse the delay as opposed to USPTO acceptance of a general allegation of unintentional delay. See Lawman Armor v. Simon, 2005 U.S. Dist. LEXIS 10843, 74 USPQ2d 1633, at 1637-8 (DC EMich 2005); Field Hybrids, LLC v. Toyota Motor Corp., 2005 U.S. Dist. LEXIS 1159 (D. Minn Jan. 27, 2005) at *21-*23. Statements are required from the responsible person(s) having

firsthand knowledge of the circumstances surrounding the protracted delay, after the abandonment date, in seeking revival. An explanation from petitioner as to why the long delay in seeking revival should be excused, independently of delay in replying which caused abandonment in the first instance, is required. The renewed petition fails to address this issue. Again, the mere statement that petitioner was preoccupied with other matters is not sufficient.

As noted in MPEP 711.03 (c)(2), subsection D, in instances in which such petition was not filed within 1 year of the date of abandonment of the application, applicants should include:

> (A) the date that the applicant first became aware of the abandonment of the application: and;
> (B) a showing as to how the delay in discovering the abandoned status of the application occurred despite the exercise of due care or diligence of the part of the applicant.

Petitioner has not specifically addressed (A) or (B).

The renewed petition included a terminal disclaimer and fee. A terminal disclaimer is not required for a petition under 37 CFR 1.137(b) for this application and the disclaimer has not been processed at this time.

Further correspondence with respect to this matter should be addressed as follows:

By Mail: Mail Stop PETITION
Commissioner for Patents
P. O. Box 1450
Alexandria, VA 22313-1450

By hand: U. S. Patent and Trademark Office
Customer Service Window, Mail Stop Petitions
Randolph Building
401 Dulany Street
Alexandria, VA 22314

The centralized facsimile number is **(571) 273-8300.**

Telephone inquiries concerning this decision should be directed to Carl Friedman at (571) 272-6842.

Carl Friedman
Petitions Examiner
Office of Petitions

UNITED STATES PATENT AND TRADEMARK OFFICE

Commissioner for Patents
United States Patent and Trademark Office
P.O. Box 1450
Alexandria, VA 22313-1450
www.uspto.gov

JOHN M. BENASSI
P. O. BOX 2016
RANCHO SANTA FE, CA 92067

COPY MAILED

AUG 17 2007

OFFICE OF PETITIONS

In re Application of :
Craig Kenton Stevens et al :
Application No. 10/367,357 : DECISION ON PETITION
Filed: February 14, 2003 :
Attorney Docket No. Benassi :

This is a decision on the petition under the unintentional provisions of 37 CFR 1.137(b), filed November 3, 2006, to revive the above-identified application.

The petition is **DISMISSED**.

Any request for reconsideration of this decision must be submitted within TWO (2) MONTHS from the mail date of this decision. Extensions of time under 37 CFR 1.136(a) are permitted. The reconsideration request should include a cover letter entitled "Renewed Petition under 37 CFR 1.137(b)." This is not a final agency action within the meaning of 5 U.S.C. § 704.

The application became abandoned for failure to reply in a timely manner to the non-final Office action mailed July 13, 2004, which set a shortened statutory period for reply of three (3) months. No extensions of time under the provisions of 37 CFR 1.136(a) were obtained. Accordingly, the application became abandoned on October 14, 2004. A Notice of Abandonment was mailed on March 11, 2005.

A grantable petition under 37 CFR 1.137(b) must be accompanied by: (1) the required reply, unless previously filed; (2) the petition fee as set forth in 37 CFR 1.17(m); (3) a statement that the entire delay in filing the required reply from the due date for the reply until the filing of a grantable petition pursuant to 37 CFR 1.137(b) was unintentional; and (4) any terminal disclaimer (and fee as set forth in 37 CFR 1.20(d)) required by 37 CFR 1.137(d). Where there is a question as to whether either

the abandonment or the delay in filing a petition under 37 CFR 1.137 was unintentional, the Director may require additional information. *See* MPEP 711.03(c)(II)(C) and (D). The instant petition lacks item (3).

There are three periods to be considered during the evaluation of a petition under 37 CFR 1.137(b):

(1) the delay in reply that originally resulted in the abandonment;

(2) the delay in filing an initial petition pursuant to 37 CFR 1.137(b) to revive the application; and

(3) the delay in filing a grantable petition pursuant to 37 CFR 1.137(b) to revive the application.

Currently, the delay has not been shown to the satisfaction of the Director to be unintentional for periods (1) and (2).

As to Period (1):

The patent statute at 35 U.S.C. § 41(a)(7) authorizes the Director to revive an "unintentionally abandoned application." The legislative history of Public Law 97-247 reveals that the purpose of 35 U.S.C. § 41(a)(7) is to permit the Office to have more discretion than in 35 U.S.C. §§ 133 or 151 to revive abandoned applications in appropriate circumstances, but places a limit on this discretion, stating that "[u]nder this section a petition accompanied by either a fee of $500 or a fee of $50 **would not be granted where the abandonment** or the failure to pay the fee for issuing the patent **was intentional** as opposed to being unintentional or unavoidable." [emphasis added]. See H.R. Rep. No. 542, 97th Cong., 2d Sess. 6-7 (1982), *reprinted in* 1982 U.S.C.C.A.N. 770-71. The revival of an intentionally abandoned application is antithetical to the meaning and intent of the statute and regulation.

35 U.S.C. § 41(a)(7) authorizes the Director to accept a petition "for the revival of an unintentionally abandoned application for a patent." As amended December 1, 1997, 37 CFR 1.137(b)(3) provides that a petition under 37 CFR 1.137(b) must be accompanied by a statement that the delay was unintentional, but provides that "[t]he Commissioner may require additional information where there is a question whether the delay was unintentional." Where, as here, there is a question whether the

initial delay was unintentional, the petitioner must meet the burden of establishing that the delay was unintentional within the meaning of 35 U.S.C. § 41(a)(7) and 37 CFR 1.137(b). *See* In re Application of G, 11 USPQ2d 1378, 1380 (Comm'r Pats. 1989); 37 CFR 1.137(b). Here, in view of the inordinate delay (over two years) in resuming prosecution, there is a question whether the entire delay was unintentional. Petitioner should note that the issue is not whether some of the delay was unintentional by any party; rather, the issue is whether the entire delay has been shown to the satisfaction of the Director to be unintentional.

The question under 37 CFR 1.137(b) for period (1) is whether the delay on the part of the party having the right or authority to reply to avoid abandonment (or not reply) was unintentional. Accordingly, any renewed petition must clearly identify the party having the right to reply to avoid abandonment on October 13, 2004 or by the extendable date of January 13, 2005. That party, in turn must explain what effort(s) was made to further reply to the outstanding Office action and further, why no reply was filed. If no effort was made to further reply, then that party must explain why the delay in this application does not result from a deliberate course of action (or inaction). Likewise, as John M. Benassi was counsel of record on the date of abandonment, then Mr. Benassi should explain why this application became abandoned while it was under his control and what efforts Mr. Benassi made to further reply of itself and with whom this matter was discussed outside of Mr. Benassi's firm. Copies of any correspondence relating to the filing, or to not filing a further reply to the outstanding Office action are required from responsible person(s), Mr. Benassi, and whoever else was involved with this application at the time of abandonment. Statements are required from any and all persons then at the firm of Mr. Benassi, and the responsible person(s) having firsthand knowledge of the circumstances surrounding the lack of a reply to the outstanding Office action. As the courts have made clear, it is pointless for the USPTO to revive a long abandoned application without an adequate showing that the delay did not result from a deliberate course of action. *See* Lawman Armor v. Simon, 2005 U.S. Dist. LEXIS 10843, 74 USPQ2d 1633 (DC EMich 2005); Field Hybrids, LLC v. Toyota Motor Corp., 2005 U.S. Dist. LEXIS 1159 (D. Minn Jan. 27, 2005); Lumenyte Int'l Corp. v. Cable Lite Corp., Nos. 96-1011, 96-1077, 1996 U.S. App. LEXIS 16400, 1996 WL 383927 (Fed. Cir. July 9, 1996) (unpublished) (patents held unenforceable due to a finding of inequitable conduct in submitting an inappropriate statement that the abandonment was unintentional).

As to Period (2):

Likewise, where the applicant deliberately chooses not to seek or persist in seeking the revival of an abandoned application, or where the applicant deliberately chooses to delay seeking the revival of an abandoned application, the resulting delay in seeking revival of the abandoned application cannot be considered as "unintentional" within the meaning of 37 CFR 1.137(b). *See* MPEP 711.03(c).

The language of both 35 U.S.C. § 41(a)(7) and 37 CFR 1.137(b) are clear and unambiguous, and furthermore, without qualification. That is, the delay in filing the reply during prosecution, as well as in filing the petition seeking revival, must have been, without qualification, "unintentional" for the reply to now be accepted on petition. The Office requires that the entire delay be at least unintentional as a prerequisite to revival of an abandoned application to prevent abuse and injury to the public. *See* H.R. Rep. No. 542, 97th Cong., 2d Sess. 7 (1982), reprinted in 1982 U.S.C.C.A.N. 771 ("[i]n order to prevent abuse and injury to the public the Commissioner . . . could require applicants to act promptly after becoming aware of the abandonment"). The December 1997 change to 37 CFR 1.137 did not create any new right to overcome an intentional delay in seeking revival, or in renewing an attempt at seeking revival, of an abandoned application. *See* Changes to Patent Practice and Procedure; Final Rule Notice, 62 Fed. Reg. 53131, 53160 (October 10, 1997), 1203 Off. Gaz. Pat. Office 63, 87 (October 21, 1997), which clearly stated clear that any protracted delay (here, over two years) could trigger, as here, a request for additional information. As the courts have since made clear, a protracted delay in seeking revival, as here, requires a petitioner's detailed explanation seeking to excuse the delay as opposed to USPTO acceptance of a general allegation of unintentional delay. *See* Lawman Armor v. Simon, 2005 U.S. Dist. LEXIS 10843, 74 USPQ2d 1633, at 1637-8 (DC EMich 2005); Field Hybrids, LLC v. Toyota Motor Corp., 2005 U.S. Dist. LEXIS 1159 (D. Minn Jan. 27, 2005) at *21-*23. Statements are required from any and all persons then at the firm of Mr. Benassi and the responsible person(s) having firsthand knowledge of the circumstances surrounding the protracted delay, after the abandonment date, in seeking revival. The Notice of Abandonment appears to indicate that confirmation was made on March 7, 2005 that this application was abandoned. Accordingly, petitioner should explain the delay in promptly seeking revival after confirming with the Examiner on March 7, 2005 that this

application was abandoned, a period of over one year and why the delay in filing a petition after this confirmation with the Examiner the delay should not be considered to have been intentional.

As noted in MPEP 711.03(c)(II), subsection D, in instances in which such petition was not filed within 1 year of the date of abandonment of the application, applicants should include:

> (A) the date that the applicant first became aware of the abandonment of the application; and
> (B) a showing as to how the delay in discovering the abandoned status of the application occurred despite the exercise of due care or diligence on the part of the applicant.

In either instance, applicant's failure to carry the burden of proof to establish that the "entire" delay was "unavoidable" or "unintentional" may lead to the denial of a petition under 37 CFR 1.137(b), regardless of the circumstances that originally resulted in the abandonment of the application.

See also New York University v. Autodesk, 2007 U.S. DIST LEXIS, U.S.District LEXIS 50832, *10 -*12 (S.D.N.Y. 2007)(protracted delay in seeking revival undercuts assertion of unintentional delay).

Any renewed petition may be addressed as follows:

By Mail: Mail Stop PETITION
Commissioner for Patents
P. O. Box 1450
Alexandria, VA 22313-1450

By hand: U. S. Patent and Trademark Office
Customer Service Window, Mail Stop Petitions
Randolph Building
401 Dulany Street
Alexandria, VA 22314

The centralized facsimile number is **(571) 273-8300.**

Correspondence regarding this decision may also be filed through the electronic filing system of the USPTO.

Telephone inquiries concerning this decision should be directed to the undersigned at (571) 272-3218.

Frances Hicks
Petitions Examiner
Office of Petitions

UNITED STATES PATENT AND TRADEMARK OFFICE

Commissioner for Patents
United States Patent and Trademark Office
P.O. Box 1450
Alexandria, VA 22313-1450
www.uspto.gov

John M. Benassi
P.O. Box 2016
Rancho Santa Fe CA 92067

COPY MAILED

AUG 20 2008

In re Application of :
Craig Kenton Stevens et al. :
Application No. 10/367,357 : ON PETITION
Filed: February 14, 2003 :
Attorney Docket No. Benassi :

This is a decision on the renewed petition under the unintentional provisions of 37 CFR 1.137(b), filed August 1, 2008, to revive the above-identified application.

The petition is **DISMISSED**.

Any request for reconsideration of this decision must be submitted within TWO (2) MONTHS from the mail date of this decision. Extensions of time under 37 CFR 1.136(a) are permitted. The reconsideration request should include a cover letter entitled "Renewed Petition under 37 CFR 1.137(b)." This is **not** a final agency action within the meaning of 5 U.S.C. § 704.

The application became abandoned for failure to reply in a timely manner to the non-final Office action mailed July 13, 2004, which set a shortened statutory period for reply of three (3) months. No extensions of time under the provisions of 37 CFR 1.136(a) were obtained. Accordingly, the application became abandoned on October 14, 2004.

A grantable petition under 37 CFR 1.137(b) must be accompanied by: (1) the required reply, unless previously filed; (2) the petition fee as set forth in 37 CFR 1.17(m); (3) a statement that the entire delay in filing the required reply from the due date for the reply until the filing of a grantable petition pursuant to 37 CFR 1.137(b) was unintentional; and (4) any terminal disclaimer (and fee as set forth in 37 CFR 1.20(d)) required by 37 CFR 1.137(d). Where there is a question as to whether either the abandonment or the delay in filing a petition under 37 CFR 1.137 was unintentional, the Director may require additional information. See MPEP 711.03(c)(II)(C) and (D). The instant petition lacks item (3).

The Petition Decisions mailed August 17, 2007 and June 5, 2008 dismissed the petitions filed November 3, 2006 and April 16, 2008 for failure to provide item (3), a statement of unintentional delay.

The showing of record continues to raises questions as to whether the abandonment of this application was unintentional within the meaning of 35 USC 41(a)(7) and CFR 1.137(b). Reference is made to the petition decisions mailed August 17, 2007 and June 5, 2008 for a discussion of petitioner's burden in rebutting these questions.

Petitioner was asked to explain the delay in reply to the non-final Office action of July 13, 2004 that originally resulted in abandonment of the above identified application. As in the previous petition, petitioner mentions preoccupation with other matters including working for firms that went bankrupt, the need to find continuous employment and being sued by bankruptcy trustees. Although the application went abandoned in October of 2004, petitioner was not made aware of this fact until he contacted the examiner of record in July of 2006. Petitioner's explanation of preoccupation with other matters give no dates and thus it is impossible to determine what the impact of his preoccupation with other matters was in regard to allowing the application to go abandoned. What led to petitioner to contact the examiner of record in July of 2006, almost two years after the date of abandonment?

Petitioner was the attorney of record and co-inventor of the instant application. Petitioner states that files were misplaced during his preoccupation with other matters. However, he does not expressly indicate whether or not he received the Notice of Abandonment mailed March 11, 2005. The renewed petitioner states that the application "...was being primarily prosecuted by my then 15 year-old boy Christopher..." It is noted that Christopher Benassi is a co-inventor as is Craig Stevens. If petitioner, John Benassi, was allowing his son, Christopher to "prosecute" the application then a statement from Christopher is required indicating his actual involvement in prosecution of this application. The statement should include whether he received the March 11, 2005 Notice of Abandonment and if so, what he did in regard to the Notice. Since the attorney of record delegated prosecution to a co-inventor, his son, it is then not clear if the other co-inventor, Craig Stevens was also involved in prosecution of the application at the time the application went abandoned. If Stevens was also involved in the prosecution then a statement from him in regard to why he let the application go abandoned is also required.

Further correspondence with respect to this matter should be addressed as follows:

By Mail: Mail Stop PETITION
Commissioner for Patents
P. O. Box 1450
Alexandria, VA 22313-1450

By hand: U. S. Patent and Trademark Office
Customer Service Window, Mail Stop Petitions
Randolph Building
401 Dulany Street
Alexandria, VA 22314

The centralized facsimile number is **(571) 273-8300.**

Telephone inquiries concerning this decision should be directed to Carl Friedman at (571) 272-6842.

Carl Friedman
Petitions Examiner
Office of Petitions

UNITED STATES PATENT AND TRADEMARK OFFICE

COMMISSIONER FOR PATENTS
UNITED STATES PATENT AND TRADEMARK OFFICE
WASHINGTON, D.C. 20231
www.uspto.gov

Paper No. 4

DRINKER BIDDLE & REATH
ONE LOGAN SQUARE
18TH AND CHERRY STREETS
PHILADELPHIA, PA 19103-6996

COPY MAILED

JUL 17 2003

OFFICE OF PETITIONS

In re Application of
Robinson, Robin A.
Application No. 10/367,367
Filed: February 14, 2003
Attorney Docket No. 44149-2US1

ON PETITION

This is a decision on the petition filed April 21, 2003, to accord the above-identified application a filing date of February 14, 2003, instead of February 15, 2003.

The petition is **granted**.

37 CFR 1.10(c) states,

> Any person filing correspondence under this section that was received by the Office and delivered by the "Express Mail Post Office to Addressee" service of the USPS, who can show that there is a discrepancy between the filing date accorded by the Office to the correspondence and the date of deposit as shown by the "date-in" on the "Express Mail" mailing label or other official USPS notation, may petition the Commissioner to accord the correspondence a filing date as of the "date-in" on the "Express Mail" mailing label or other official USPS notation, provided that:
>
> (1) The petition is filed promptly after the person becomes aware that the Office has accorded, or will accord, a filing date other than the USPS deposit date;
> (2) The number of the "Express Mail" mailing label was placed on the paper(s) or fee(s) that constitute the correspondence prior to the original mailing by "Express Mail;" and
> (3) The petition includes a true copy of the "Express Mail" mailing label showing the "date-in," and of any other official notation by the USPS relied upon to show the date of deposit.

All of the above requirements have been met. Therefore, the application will be accorded a filing date of February 14, 2003.

The file is now being forwarded to the Office of Initial Patent Examination to accord the application a filing date of February 14, 2003.

Telephone inquiries should be directed to Petitions Attorney Steven Brantley at (703) 306-5683.

Charles Steven Brantley
Petitions Attorney
Office of Petitions

Liana Chase
Program Assistant
Office of Petitions

UNITED STATES PATENT AND TRADEMARK OFFICE

Commissioner for Patents
United States Patent and Trademark Office
P.O. Box 1450
Alexandria, VA 22313-1450
www.uspto.gov

COOLEY GODWARD KRONISH LLP
ATTN: Patent Group
SUITE 500, 1200 - 19th STREET, NW
WASHINGTON DC 20036-2402

COPY MAILED

SEP 06 2007

OFFICE OF PETITIONS

In re Application of	:	
Robin A. Robinson	:	
Application No. 10/367367	:	DECISION ON PETITION
Filed: 02/14/2003	:	
Attorney Docket No. NOVV-015/15US	:	

This is a decision on the petition under the unintentional provisions of 37 CFR 1.137(b), filed March 20, 2007, to revive the above-identified application.

The petition is **GRANTED**.

The application became abandoned for failure to reply in a timely manner to the non-final Office action mailed April 7, 2006, which set a shortened statutory period for reply of three (3) months. No extensions of time under the provisions of 37 CFR 1.136(a) were obtained. Accordingly, the application became abandoned on July 8, 2006. A Notice of Abandonment was mailed on October 31, 2006.

The petition satisfies the requirements of 37 CFR 1.137(b) in that petitioner has supplied (1) the reply in the form of an amendment, (2) the petition fee, and (3) an adequate statement of unintentional delay.

37 CFR 1.137(b)(3) requires a statement that "the entire delay in filing the required reply from the due date for the reply until the filing of a grantable petition pursuant to 37 CFR 1.137(b) was unintentional." Since the statement appearing in the petition varies from the language required by 37 CFR 1.137(b)(3), the statement is being construed as the required statement. Petitioner must notify the Office if this is **not** a correct reading of the statement appearing in the petition.

With the present petition, petitioner paid a $510.00 fee for an extension of time for reply within the third month. A request for an extension of time under 37 CFR 1.136 must be filed prior to the expiration of the maximum extendable period for reply. *See* In re Application of S., 8 USPQ2d 1630, 1631 (Comm'r Pats. 1988). As the $510.00 extension of time fee was submitted subsequent to the maximum extendable period for reply, this fee is unnecessary and will be credited to petitioner's deposit account.

Telephone inquiries concerning this decision should be directed to the undersigned at (571) 272-3211.

This application is being referred to Technology Center AU 1636 for appropriate action by the Examiner in the normal course of business on the reply received

Christina Tartera Donnell

Christina Tartera Donnell
Senior Petitions Attorney
Office of Petitions

UNITED STATES PATENT AND TRADEMARK OFFICE

COMMISSIONER FOR PATENTS
UNITED STATES PATENT AND TRADEMARK OFFICE
WASHINGTON, D.C. 20231
www.uspto.gov

Paper No. 3

COPY MAILED

MAY 19 2003

OFFICE OF PETITIONS

Raymond N. Baker
Shanley and Baker
Suite 235
2233 Wisconsin Avenue
Washington, DC 20007

In re Application of	:	
Sinsel, et al.	:	
Application No. 10/367,371	:	DECISION GRANTING STATUS
Filed: February 14, 2003	:	UNDER 37 CFR 1.47(a)
Atty. Dkt. No.: 1010 C-94	:	
For: SURFACE PREPARATION AND POLYMERIC COATING OF CONTINUOUS-STRIP FLAT-ROLLED STEEL AND COATED PRODUCT	:	

This decision is in response to the petition under 37 CFR 1.47(a), filed May 5, 2003.

The petition is **DISMISSED**.

Rule 47 applicant is given TWO MONTHS from the mailing date of this decision to reply, correcting the below-noted deficiencies. Any reply should be entitled "Request for Reconsideration of Petition Under 37 CFR 1.47(a)," and should only address the deficiencies noted below, except that the reply may include an oath or declaration executed by the non-signing inventor. Failure to respond will result in abandonment of the application. Any extensions of time will be governed by 37 CFR 1.136(a).

The above-identified application was filed February 14, 2003 without a fully executed oath or declaration or grantable petition under Rule.

A grantable petition under 37 CFR 1.47(a) requires: (1) proof that the non-signing inventor cannot be reached or refuses to sign the oath or declaration after having been presented with the application papers (specification, claims and drawings); (2) an acceptable oath or declaration in compliance with 35 U.S.C. §§ 115 and 116; (3) the petition fee; and (4) a statement of the last known address of the non-signing inventor.

As to item (1), petitioner has failed to establish that the inventor received the application papers (specification, claims, drawings, and oath or declaration) and thereafter refused to execute the oath or declaration.

Petitioner makes reference to ongoing litigation between assignee and the non-signing inventor, however, petitioner is reminded that before a refusal to sign an oath or declaration can be alleged, it must be demonstrated that a *bona fide* effort has been made to present a copy of the application papers (specification, including claims, drawings, and oath or declaration) to the non-signing inventor or the legal representative of the non-signing inventor. Petitioner has presented no evidence that the non-signing inventor or the legal representative of the non-signing inventor was ever presented with a copy of the application papers

Application No. 10/367,371

(specification, claims, drawings, oath or declaration) for the instant application.

Any renewed petition should be accompanied by evidence to sufficiently establish that the non-signing inventor or the legal representative of the non-signing inventor was sent a complete copy of the application papers and thereafter refused to execute the declaration. A copy of the application papers should be sent to the last known address of the non-signing inventor, or, if the non-signing inventor is represented by counsel, to the address of the non-signing inventor's attorney. Petitioner may wish to provide the Office copies of letters sent to the inventor indicating the enclosure of the application papers (specification, claims, drawings, and oath or declaration). If after the inventor receives the application papers and requests to execute the oath or declaration are refused, these facts should be set forth in a statement of facts signed by the person to whom the refusals were made and detailing with specificity the exact manner of the refusals. If a written refusal has been made, a copy of the written refusal should be included on renewed petition.

As to item (2), an acceptable oath or declaration for the patent application in compliance with 37 CFR 1.63 has not been presented. The declaration presented with the instant petition is not acceptable as it identifies the instant application by incorrect application number and filing date. Any renewed petition should include an executed oath or declaration in full compliance with 37 CFR 1.63 and 37 CFR 1.64. Submission of a proper oath or declaration will require a late surcharge of $130.00.

As to item (3), the required petition fee has been charged to Deposit Account No. 02-0412.

Further correspondence with respect to this matter should be addressed as follows:

By mail:	**Mail Stop Petition** Commissioner for Patents P.O. Box 1450 Alexandria, VA 22313-1450
By facsimile:	(703) 308-6916
By hand:	Office of Petitions 2201 South Clark Place Crystal Plaza 4, Suite 3C23 Arlington, VA 22202
By delivery service: (FedEx, UPS, DHL, etc.)	U.S. Patent and Trademark Office 2011 South Clark Place Customer Window, **Mail Stop Petition** Crystal Plaza Two, Lobby, Room 1B03 Arlington, VA 22202

Telephone inquiries regarding this decision should be directed to

Application No. 10/367,371

the undersigned at (703) 305-0310.

Alesia M. Brown
Petitions Attorney
Office of Petitions
Office of the Deputy Commissioner
for Patent Examination Policy

4TCO
6.05.03

INITIAL SCREENING OF INCOMING PAPERS CHECKLIST

Reviewer: CB Date: 10/23/03

APPLICATION NO. 10/367371

1. PETITION TYPE CODE

____R137(a) Petition-------- -501
____R137(a) Petition ---------509
(Issue Fee/Dwgs)
____R137(b) Petition----------502
____R137(b) Petition----------510
(Issue Fee/Dwgs)
____R137(f) Petition----------536
____R182 Petition----------519
____R183 Petition----------503
____R378(b) Petition----------532
____R378(c) Petition----------533
____R377 Petition----------521
____R3.81(b) Petition---------523
____R181 Petition----------515
____R181 Petition----------504

PETITION TYPE CODE

____R28c Petition----------321/320
X R47 Petition---------- 313 renew
____R53(e) Petition----------408
____R53 (R62 filing date)-----410
____R10 Petition----------411
____Lost Application----------412
____R78(a)(3) Petition----------535
____R78(a)(6) Petition----------535
____R55(c) Petition----------535
____R314 Petition----------508
____R55(a) Petition----------507
____Pet. W/D Abn----------525
____R705(b) PTA-Bef iss------550
____R705(d) PTA-Aft iss-------551
____R705(c)PTA-SpiteDueCare-552
____Other_____

2. LIST PAPERS FILED WITH PETITIONS

____PreAmdt/Amdt
____Rule 312 Amdt
____Reply/Arguments
____Election
____Notice of Appeal
____Brief (3)
____Reply Brief
____Declaration R132
____CPA
____RCE
____IDS
____Terminal Disclaimer
____Request CofC
____Issue Fee
____Drawings
____Ext Time (____)
____Associate POA
____Change of Address
____Revocation/POA
____Oath/Decl. & POA
____Priority Documents
____Statement 3.73(b)
____Rescind Non-Pub Req.
____Notice of Foreign Filing

Other Papers_____

3. Is paper a petition to withdraw holding of abandonment: ____yes____no
If so, send paper and/or file to appropriate location ***(Note: remove any flag set first)***:

a. Nonreceipt of action from TC or assertion that reply was timely filed:
Send paper to TC_____
b. Nonreceipt of Missing Parts Notice or assertion that reply was timely filed:
Send paper to DIRECTOR -OIPE - -CP2-7D25 (PH: 308-0910)
c: Assertion of timely payment of issue fee and/or submission of drawings:
Send petition to Office of Publications: ATTN: Tom Hawkins
d. Other_____

4. Other:_____
If not handled in Office of Petitions, send paper to appropriate location.

5. Is petition accompanied by assignment papers, fee address, or other paper which needs to be sent to another location? ____ yes ____ no If so, make copy of assignment papers, fee address, or other paper; mail original to proper location and place copy in file with an indication that the original paper(s) has been forwarded to the appropriate location (Assignment Branch; Maintenance Fee Division, etc.)

UNITED STATES PATENT AND TRADEMARK OFFICE

COMMISSIONER FOR PATENTS
UNITED STATES PATENT AND TRADEMARK OFFICE
P.O. BOX 1450
ALEXANDRIA, VA 22313-1450
www.uspto.gov

Paper No. 5

Raymond N. Baker
Shanley and Baker
Suite 235
2233 Wisconsin Avenue
Washington, DC 20007

COPY MAILED
NOV 0 6 2003
OFFICE OF PETITIONS

In re Application of Sinsel, et al. Application No. 10/367,371 Filed: February 14, 2003 Docket No.: 1010 C-94 For: SURFACE PREPARATION AND POLYMERIC COATING OF CONTINUOUS-STRIP FLAT-ROLLED STEEL AND COATED PRODUCT	DECISION GRANTING STATUS UNDER 37 CFR 1.47(a)

This decision is in response to the renewed petition under 37 CFR 1.47(a), filed October 16, 2003.

The petition is **GRANTED**.

Petitioner has shown that inventor Michael S. Bailey has refused to execute the declaration for the above-identified application.

The above-identified application and papers have been reviewed and found in compliance with 37 CFR 1.47(a). This application is hereby accorded Rule 1.47(a) status.

As provided in Rule 1.47(c), this Office will forward notice of this application's filing to the non-signing inventors at the addresses given in the petition. Notice of the filing of this application will also be published in the Official Gazette.

After this decision is mailed, the above-identified application will be returned to the Office of Initial Patent Examination for further processing.

Telephone inquiries regarding this decision should be directed to the undersigned at (703) 305-0310.

Alesia M. Brown
Senior Petitions Attorney
Office of Petitions

UNITED STATES PATENT AND TRADEMARK OFFICE

COMMISSIONER FOR PATENTS
UNITED STATES PATENT AND TRADEMARK OFFICE
P.O. BOX 1450
ALEXANDRIA, VA 22313-1450
www.uspto.gov

MICHAEL S. BAILEY
146 HAMILTON ROAD
LANDENBERG, PA 19350

In re Application of	:	
Sinsel, et al.	:	
Application No.: 10/367,371	:	LETTER
Filed: February 14, 2003	:	
Atty. Dkt. No.: 1010 C-94	:	
For: SURFACE PREPARATION AND	:	
POLYMERIC COATING OF CONTINUOUS-	:	
STRIP FLAT-ROLLED STEEL AND COATED	:	
PRODUCT	:	

COPY MAILED

NOV 0 6 2003

OFFICE OF PETITIONS

Dear Sir:

You are named as an inventor in the above-identified United States patent application filed under the provisions of 35 U.S.C. 116 (United States Code) and 37 C.F.R. § 1.47(a), Rules of Practice in Patent Cases. Should a patent be granted on the application you will be designated therein as a joint inventor.

As a named inventor you are entitled to inspect any paper in the file wrapper of the application, order copies of all or any part thereof (at a prepaid cost as per 37 C.F.R. § 1.19) or make your position of record in the application. Alternatively, you may arrange to do any of the preceding through a registered patent attorney or agent presenting written authorization from you. If you care to join the application, counsel of record (see below) would presumably assist you. Joining in the application would entail the filing of an appropriate oath or declaration by you pursuant to 37 C.F.R. § 1.63.

Telephone inquiries regarding this communication should be directed to the undersigned at (703) 305-0310. Requests for information regarding your application should be directed to the File Information Unit at (703) 308-2733. Information regarding how to pay for and order a copy of the application, or a specific paper in the application, should be directed to Certification Division at (703) 308-9726 or 1-800-972-6382 (outside the Washington D.C. area).

Telephone inquiries regarding this decision should be directed to the undersigned at (703) 305-0310.

Alesia M. Brown
Petitions Attorney
Office of Petitions

UNITED STATES PATENT AND TRADEMARK OFFICE

Commissioner for Patents
United States Patent and Trademark Office
P.O. Box 1450
Alexandria, VA 22313-1450
www.uspto.gov

COPY MAILED

SEP 28 2007

OFFICE OF PETITIONS

HIMANSHU S AMIN
AMIN & TUROCY LLP
NATIONAL CITY CENTER
1900 E 9TH STREET 24TH FLOOR
CLEVELAND OH 44114

In re Application of
Leszek Mazur
Application No. 10/367,375
Filed: February 13, 2003
Attorney Docket No.
MS302162.1/MSFTP384US

DECISION ON PETITION

This is in response to the petition to revive under 37 CFR 1.137(b), filed August 22, 2007.

The petition under 37 CFR 1.137(b) is **GRANTED**.

The above-identified application became abandoned for failure to timely file a reply to the non-final Office action mailed January 25, 2007. This Office action set an extendable period for reply of three (3) months. No reply having been received, the application became abandoned on April 26, 2007. A Notice of Abandonment was mailed on August 8, 2007.

With the instant petition, applicant has paid the petition fee, submitted the required reply in the form of an Amendment, and made the proper statement of unintentional delay.

Pursuant to 37 CFR 1.136, an extension of time must be filed prior to the expiration of the maximum period obtainable for reply to avoid abandonment. Accordingly, since the $1020 extension of time fee submitted with the petition on August 22, 2007 was subsequent to the maximum period obtainable for reply (July 25, 2007), this fee has been refunded to petitioner's Deposit Account 50-1063.

The matter is being forwarded to Group Art Unit 2621 for consideration of the Amendment, filed August 22, 2007.

Telephone inquiries related to this decision should be directed to the undersigned at 571-272-3207.

Cliff Congo
Petitions Attorney
Office of Petition

UNITED STATES PATENT AND TRADEMARK OFFICE

Commissioner for Patents
United States Patent and Trademark Office
P.O. Box 1450
Alexandria, VA 22313-1450
www.uspto.gov

Paper No. 051904

SHELDON & MAK, INC
225 South Lake Avenue, 9th Floor
Pasadena, CA 91101

MAY 24 2004

In re Application of:
GOTT *et al.*
Serial No.: 10/367,383
Filed: February 14, 2003
Attorney Docket No.: **14159**

DECISION ON PETITION
TO MAKE SPECIAL

This is a decision on the petition under 37 C.F.R. § 1.102(c), filed March 26, 2003, to make the above-identified application special under the accelerated examination procedure set forth in the Manual of Patent Examining Procedure (M.P.E.P.) § 708.02, Item VI: Energy.

The petition is **DISMISSED**.

A grantable petition under 37 C.F.R. § 1.102(c), and in accordance with M.P.E.P. § 708.02, Item VI, for inventions which materially contribute to (A) the discovery or development of energy resources, or (B) the more efficient utilization and conservation of energy resources, must be accompanied by statements under 37 C.F.R. § 1.102 by the applicant, assignee, or an attorney/agent registered to practice before the Office explaining how the invention materially contributes to category (A) or (B) set forth above. No fee is required for this petition.

The petition asserts that the present invention materially contributes to the development of energy sources; however, no statements explaining how the invention materially contributes to (A) or (B), as set forth, above are provided. The petition merely states that the invention relates to a system for converting the momentum and downward forces wheeled vehicles into motion capable of driving a shaft to generate electricity. Since energy must be spent to create energy with the system, it is unclear how the claimed matter materially contributes to the development and conservation of energy. Thus, the petition is not a sufficient showing to accord the application special status pursuant to M.P.E.P. § 708.02, Item VI.

For the above stated reasons, the petition is inadequate to qualify the application for special status under 37 CFR § 1.102(c), and pursuant to M.P.E.P. § 708.02, Item VI. The petition does not provide statements explaining how the invention materially contributes to the development of energy resources. Accordingly, the petition is dismissed.

Should petitioner desire reconsideration, petitioner should supplement this petition by a statement providing the information as outlined above. No further petition fee is required.

Any request for reconsideration must be filed within TWO MONTHS of the date of this decision.

Inquiries regarding this decision should be directed to Clayton LaBalle at (571) 272-1594.

Clayton E. LaBalle, Special Programs Examiner
Technology Center 2800
Semiconductors, Electrical and Optical
Systems and Components

UNITED STATES PATENT AND TRADEMARK OFFICE

Commissioner for Patents
United States Patent and Trademark Office
P.O. Box 1450
Alexandria, VA 22313-1450
www.uspto.gov

Alan Carlson
6202 Lynn Lane
Lago Vista, TX 78645

COPY MAILED

JUN 2 7 2008

OFFICE OF PETITIONS

In re Application of	:	
Alan L. Carlson	:	
Application No. 10/367,395	:	ON PETITION
Filed: February 14, 2003	:	
Attorney Docket No. ALC 003	:	

This is a decision on the petition under the unintentional provisions of 37 CFR 1.137(b), filed October 29, 2007, to revive the above-identified application.

The petition is **GRANTED**.

The application became abandoned for failure to timely file a reply within the meaning of 37 CFR 1.113 to the final Office action of December 21, 2006. The proposed reply required for consideration of a petition to revive must be a Notice of Appeal (and appeal fee required by 37 CFR 41.20(b)(2), an amendment that *prima facie* places the application in condition for allowance, a Request for Continued Examination and submission (37 CFR 1.114), or the filing of a continuing application under 37 CFR 1.53(b). See MPEP 711.03(c)(III)(A)(2). A one (1) month extension of time pursuant to the provisions of 37 CFR 1.136(a) was obtained. Accordingly, the date of abandonment of this application is April 22, 2007.

The petition satisfies the requirements of 37 CFR 1.137(b) in that petitioner has supplied (1) the reply in the form of a Request for Continued Examination (RCE) and fee of $405, and the submission required by 37 CFR 1.114; (2) the petition fee of $770; and (3) a proper statement of unintentional delay.

Telephone inquiries concerning this decision should be directed to Terri Williams at (571) 272-2991.

This application is being referred to Technology Center AU 3764 for processing of the RCE and for appropriate action by the Examiner in the normal course of business on the amendment submitted in accordance with 37 CFR 1.114.

Chris Bottorff
Petitions Examiner
Office of Petitions

UNITED STATES PATENT AND TRADEMARK OFFICE

Commissioner for Patents
United States Patent and Trademark Office
P.O. Box 1450
Alexandria, VA 22313-1450
www.uspto.gov

BUCHANAN INGERSOLL & ROONEY, PC
ONE OXFORD CENTRE, 20th Floor
301 GRAND STREET
PITTSBURGH, PA 15219

COPY MAILED

SEP 20 2007

OFFICE OF PETITIONS

In re Application of	:	
Elliot R. RAMBERG, et al.	:	
Application No. 10/367,418	:	DECISION ON PETITION
Filed: February 14, 2003	:	TO WITHDRAW
Attorney Docket No. 030067	:	FROM RECORD
	:	

This is a decision on the Request to Withdraw as attorney or agent under 37 C.F.R. § 1.36(b) or 37 C.F.R. § 10.40 filed May 29, 2007.

The request is **APPROVED**.

A review of the file record indicates that Duane A. Stewart, III: (1) does not have power of attorney in this patent application; and (2) has been employed or otherwise engaged in the proceedings in this patent application. In view of the present decision, Duane A. Stewart, III has/have been withdrawn from the present application and may not prepare or submit papers under 37 C.F.R. § 1.34, or correspond in any manner in this application unless appointed in an acceptable power of attorney under 37 C.F.R. § 1.32(b).

The request to change the correspondence of record is not acceptable as the requested correspondence address is not that of: (1) the first named signing inventor; or (2) the intervening assignee of the entire interest. All future communications from the Office will be directed to the first named signing inventor at the first copied address below until otherwise properly notified by the applicant.

In order to request or take action in a patent matter, the assignee must establish its ownership of the patent to the satisfaction of the Director. In this regard, a Statement under 37 CFR 3.73(b) must have either: (i) documentary evidence of a chain of title from the original owner to the assignee (e.g., copy of an executed assignment), and a statement affirming that the documentary evidence of the chain of title from the original owner to the assignee was or concurrently is being submitted for recordation pursuant to § 3.11; or (ii) a statement specifying where documentary evidence of a chain of title from the original owner to the assignee is recorded in the assignment records of the Office (e.g., reel and frame number).

Applicant is reminded that all other attorneys remain of record.

There is an outstanding Office action mailed March 23, 2007 that requires a reply by the applicant.

Telephone inquires concerning this decision should be directed to Diane Goodwyn at 571-272-6735.

April M. Wise
Petitions Examiner
Office of Petitions

cc: ELLIOT R. RAMBERG
1310 NW 64TH AVENUE
HOLLYWOOD, FL 33024

cc: MARTIN MUNZER
CYGENE LABORATORIES, INC.
7786 WILES ROAD
CORAL SPRINGS, FL 33067

UNITED STATES PATENT AND TRADEMARK OFFICE

Commissioner for Patents
United States Patent and Trademark Office
P.O. Box 1450
Alexandria, VA 22313-1450
www.uspto.gov

BUCHANAN INGERSOLL, P.C.
ONE OXFORD CENTRE, 20TH FLOOR
301 GRANT STREET
PITTSBURGH PA 15219

COPY MAILED

DEC 0 7 2007

OFFICE OF PETITIONS

In re Application of

RAMBERG, Elliot R. et al.
Application No. 10/367,418
Filed: February 14, 2003
Attorney Docket No. **030067**

DECISION ON PETITION
TO WITHDRAW
FROM RECORD

This is a decision on the Request to Withdraw as attorney or agent of record under 37 C.F.R. § 1.36(b), filed November 08, 2007.

The request is **NOT APPROVED**.

A grantable request to withdraw as attorney/agent of record must be signed by every attorney/agent seeking to withdraw or contain a clear indication that one attorney is signing on behalf of another/others. A request to withdraw will not be approved unless at least 30 (thirty) days would remain between the date of approval and the later of the expiration date of a time to file a response or the expiration date of the maximum time period which can be extended under 37 C.F.R. § 1.136(a).

The request cannot be approved because no reasons for withdrawal have been provided. The Office cannot, at this time, determine whether practitioner's request is one of the mandatory or permissive reasons enumerated in 37 CFR 10.40. Any subsequent requests must include reasons for withdrawal. Please note that there is a space provided for on PTO/SB/83 (Request to Withdraw as Attorney or Agent) to supply practitioner's reasons.

All future communications from the Office will continue to be directed to the above-listed address until otherwise notified by applicant.

Telephone inquiries concerning this decision should be directed to Tredelle Jackson at 571-272- 2783.

Monica A. Graves
Petitions Examiner
Office of Petitions

cc: **MARTIN MUNZER**
CYGENE, INC.
7786 WILES ROAD
CORAL SPRINGS, PA 33067

UNITED STATES PATENT AND TRADEMARK OFFICE

Commissioner for Patents
United States Patent and Trademark Office
P.O. Box 1450
Alexandria, VA 22313-1450
www.uspto.gov

BUCHANAN INGERSOLL, P.C.
ONE OXFORD CENTRE, 20TH FLOOR
301 GRANT STREET
PITTSBURGH PA 15219

COPY MAILED

FEB 1 5 2008

OFFICE OF PETITIONS

In re Application of

RAMBERG, Elliot R. et al.
Application No. 10/367,418
Filed: February 14, 2003
Attorney Docket No. **030067**

DECISION ON PETITION
TO WITHDRAW
FROM RECORD

This is a decision on the Request to Withdraw as attorney or agent of record under 37 C.F.R. § 1.36(b), filed December 17, 2007.

The request is **APPROVED**.

A grantable request to withdraw as attorney/agent of record must be signed by every attorney/agent seeking to withdraw or contain a clear indication that one attorney is signing on behalf of another/others. A request to withdraw will not be approved unless at least 30 (thirty) days would remain between the date of approval and the later of the expiration date of a time to file a response or the expiration date of the maximum time period which can be extended under 37 C.F.R. § 1.136(a).

The request was signed by Michael Denver on behalf of all attorneys of record who are associated with customer No. 30542. All attorneys/agents associated have been withdrawn. Applicant is reminded that there is no attorney of record at this time.

The request to change the correspondence of record is not acceptable as the requested correspondence address is not that of: (1) the first named signing inventor; or (2) an intervening assignee of the entire interest under 37 C.F.R 3.71. All future communications from the Office will be directed to the first named signing inventor or the assignee of the entire interest at the first copied address below until otherwise properly notified by the applicant.

Telephone inquiries concerning this decision should be directed to Tredelle Jackson at 571-272-2783.

Monica A. Graves
Petitions Examiner
Office of Petitions

cc: **ELLIOT R. RAMBERG**
1310 NW 64TH AVENUE
HOLLYWOOD, FL 33024

cc: **MARTIN MUNZER**
CYGENE, INC.
CORAL SPRINGS, PA 33067

UNITED STATES PATENT AND TRADEMARK OFFICE

COMMISSIONER FOR PATENTS
UNITED STATES PATENT AND TRADEMARK OFFICE
P.O. BOX 1450
ALEXANDRIA, VA 22313-1450
www.uspto.gov

30 SEP 2003

Daniel P. Malley
Wall Marjama & Bilinski LLP
101 South Salina Street
Suite 400
Syracuse, New York 13202

In re Application of
ABELEN et al. :
Application No.: 10/367,422 :
Filing Date: 14 February 2003 : DECISION
Attorney Docket No.: 327-095 :
For: DEVICE FOR PNEUMATIC OR :
HYDRAULIC CONVEYING OF DUSTY, :
POWDERY OR GRANULAR BULK
MATERIAL

This is a decision on applicants' "Petition under 37 CFR 1.182 to Convert a National Application which was Filed under 35 U.S.C. 111 to a National Stage Application filed under 35 U.S.C. 371" filed 21 August 2003 requesting that the above captioned application be treated as a U.S. national stage application. The $130 petition fee will be charged to Deposit Account no. 50-0289.

BACKGROUND

On 27 June 2001, applicants filed international application PCT/EP01/08706 which claimed a priority date of 16 August 2000. A copy of the international application was communicated to the United States Patent and Trademark Office from the International Bureau on 21 February 2002. Pursuant to 37 CFR 1.495, the deadline for payment of the basic national fee in the United States was to expire 30 months from the priority date, 21 February 2003.

On 14 February 2003, applicants filed, *inter alia*: a transmittal letter for a "New Application" which requested a filing date under 37 CFR 1.53(b) The transmittal letter indicated that the requirements for a filing date under 37 CFR 1.53(b) were: 6 pages of specification, 3 pages of claims, 1 page of abstract; and 1 sheet of drawings.

On 12 June 2003, applicants filed "Request for Corrected Filing Receipt" which stated that "[o]ur claim for Priority under PCT/EP01/08706 filed 27 July 2001 is missing from the Foreign Application Section of the Filing Receipt."

On 21 August 2003, applicants filed "Petition under 37 CFR 1.182 to Convert a National Application which was Filed under 35 U.S.C. 111 to a National Stage Application filed under 35 U.S.C. 371" requesting that the above captioned application be treated as a U.S. national stage application.

10/03/2003 SNAJARRO 00000001 500289 10367422

01 FC:1460 130.00 DA

DISCUSSION

Any intended filing of an international application as a national stage application must clearly and unambiguously be identified as such and must satisfy all of the conditions set forth in 35 U.S.C. 371(c). See 37 CFR 1.495(g):

> The documents and fees submitted . . . must be clearly identified as a submission to enter the national stage under 35 U.S.C. 371. Otherwise, the application will be considered as being made under 35 U.S.C. 111.

In addition, section 1893.03(a), page 1800-149 of the MPEP states that:

> If there are any conflicting instructions as to whether the filing is under 35 U.S.C. 111(a) or 35 U.S.C. 371, the application will be accepted as filed under 35 U.S.C. 111(a).

On 14 February 2003, applicants submitted a transmittal letter entitled "New Application Transmittal" requesting a filing date under 37 CFR 1.53(b). The submission of a transmittal letter for a utility patent application under 37 CFR 1.53(b) is inconsistent with an intent to enter the national stage of the PCT under 35 U.S.C. 371. Accordingly, the original papers deposited on 14 February 2003 will be treated as a filing under 35 U.S.C. 111(a).

CONCLUSION

The petition under 37 CFR 1.182 and request for corrected filing receipt are **DISMISSED** without prejudice.

Any reconsideration on the merits of this petition must be filed within **TWO (2) MONTHS** from the mail date of this decision. Any reconsideration request should include a cover letter entitled "Renewed Petition under 37 CFR 1.182."

Any further correspondence with respect to this matter should be addressed to: Mail Stop PCT, Commissioner for Patents, Office of PCT Legal Administration, P.O. Box 1450, Alexandria, Virginia 22313-1450, with the contents of the letter marked to the attention of the Office of PCT Legal Administration.

This application is being returned to the Technology Center 2856.

Anthony Smith
Attorney-Advisor
Office of PCT Legal Administration
Telephone: (703) 308-6314
Facsimile: (703) 308-6459

UNITED STATES PATENT AND TRADEMARK OFFICE

Commissioner for Patents
United States Patent and Trademark Office
P.O. Box 1450
Alexandria, VA 22313-1450
www.uspto.gov

Paper No. 17

WALL MARJAMA & BILINSKI
101 SOUTH SALINA STREET
SUITE 400
SYRACUSE, NY 13202

COPY MAILED

OCT 1 8 2004

OFFICE OF PETITIONS

In re Application of	:	
Abelen et al.	:	GRANT OF PETITION
Application No. 10/367,422	:	UNDER 37 CFR 1.78(a)(3)
Filed: February 14, 2003	:	
Attorney Docket No. 327-095	:	

This is a decision on the renewed petition under 37 CFR 1.78(a)(3), filed June 1, 2004, to accept an unintentionally delayed claim for the benefit of a prior PCT application.

The petition is **granted**.

When an application is filed on or after November 29, 2000, benefit claims under 35 U.S.C. 119(e), 120, 121 and 365(c) must be made during the pendency of the application and within the later of four months from the actual filing date of the application or sixteen months from the filing date of the prior application. For the instant application, the above period of time ended on June 14, 2003. The priority claims at issue were not made by this date. However, petitioner has submitted a petition under 37 CFR 1.78(a)(3).

37 CFR 1.78(a)(3) states,

If the reference required by 35 U.S.C. 120 and paragraph (a)(2) of this section is presented in a nonprovisional application after the time period provided by paragraph (a)(2)(ii) of this section, the claim under 35 U.S.C. 120, 121, or 365(c) for the benefit of a prior-filed copending nonprovisional application or international application designating the United States of America may be accepted if the reference identifying the prior-filed application by application number or international application number and international filing date was unintentionally delayed. A petition to accept an unintentionally delayed claim under 35 U.S.C. 120, 121, or 365(c) for the benefit of a prior-filed application must be accompanied by:

(i) The reference required by 35 U.S.C. 120 and paragraph (a)(2) of this section to the prior-filed application, unless previously submitted;
(ii) The surcharge set forth in § 1.17(t); and
(iii) A statement that the entire delay between the date the claim was due under paragraph (a)(2)(ii) of this section and the date the claim was filed was unintentional. The Commissioner may require additional information where there is a question whether the delay was unintentional.

Petitioner has satisfied the above requirements for relief under 37 CFR 1.78(a)(3).

The granting of this petition is not a determination that petitioner is actually entitled to the benefit of the filing date of the prior-filed application, but is only a determination that the Office will allow petitioner to file an untimely claim for priority. The examiner will, in due course, consider any priority claims and determine the extent to which the application is entitled to an earlier filing date.

A corrected Filing Receipt, which includes the priority claim, accompanies this decision on petition.

Petitioner should note that the cover page of the certified copy of the PCT application contains a typographical error. The cover page lists the application as PCT/EP01/08**076** rather than PCT/EP01/08**706**.

The previous decision stated, "At this time, the surcharge of $1,330 will be charged to petitioner's deposit account." The instant petition was accompanied by a payment for $1,330. Therefore, since the fee has been paid twice, $1,330 will be credited to petitioner's deposit account.

This application is being forwarded to Technology Center Art Unit 2856 for appropriate action on the amendments previously submitted, including consideration by the examiner of the claim for priority. **The examiner should consider the priority claim and determine the extent to which the application is entitled to an earlier filing date based on the prior-filed application.**

Telephone inquiries may be directed to Petitions Attorney Steven Brantley at (571) 272-3203.

Frances Hicks

Frances Hicks
Petitions Examiner
Office of Petitions

Attached: Corrected Filing Receipt

UNITED STATES PATENT AND TRADEMARK OFFICE

Commissioner for Patents
United States Patent and Trademark Office
P.O. Box 1450
Alexandria, VA 22313-1450
www.uspto.gov

JJGJR.: 06-06

Paper No: __

JONATHAN SPANGLER
NU VASIVE, INC.
4545 TOWNE CENTRE COURT
SAN DIEGO CA 92121

COPY MAILED
JUN 12 2006
OFFICE OF PETITIONS

In re Application of	:	
Blain	:	
Application No. 10/367,441	:	ON PETITION
Filed: 14 February, 2003	:	
Attorney Docket No. 074US2	:	

This is a decision on a petition filed on 1 December, 2005, under 37 C.F.R. §1.137(b).

For the reasons set forth below, the petition under 37 C.F.R. §1.137(b) is **GRANTED**.

BACKGROUND

The record indicates:

- Petitioner failed to reply timely and properly to the final Office action mailed on 1 February, 2005, with reply due absent extension of time on or before Monday, 2 May, 2005;
- the application went abandoned by operation of law after midnight 1 May, 2005;
- the Office mailed the Notice of Abandonment on 3 October, 2005;
- on 1 December, 2005, Petitioner filed the instant petition, fee, reply in the form of a request for continued examination under 37 C.F.R. §1.114 with fee and an admendment as a submission, and made a statement of unintentional delay–thus, Petitioner appears to have satisfied the regulatory requirements under 37 C.F.R. §1.137(b).

STATUTES, REGULATIONS AND ANALYSIS

Congress has authorized the Commissioner to "revive an application if the delay is shown to the satisfaction of the Commissioner to have been "unavoidable." 35 U.S.C. §133 (1994).[1]

The regulations at 37 C.F.R. §1.137(a) and (b) set forth the requirements for a petitioner to revive a previously unavoidably or unintentionally, respectively, abandoned application under this congressional grant of authority. The language of 35 U.S.C. §133 and 37 C.F.R. §1.137(a) is clear, unambiguous, and without qualification: the delay in tendering the reply to the outstanding Office action, as well as filing the first petition seeking revival, must have been unavoidable for the reply now to be accepted on petition.[2]

Delays in responding properly raise the question whether delays are unavoidable.[3] Where there is a question whether the delay was unavoidable, Petitioners must meet the burden of establishing that the delay was unavoidable within the meaning of 35 U.S.C. §133 and 37 C.F.R. §1.137(a).[4] And the Petitioner must be diligent in attending to the matter.[5] Failure to do so does not constitute the care required under Pratt, and so cannot satisfy the test for diligence and due care.

(By contrast, unintentional delays are those that do not satisfy the very strict statutory and regulatory requirements of unavoidable delay, and also, by definition, are not intentional.[6]))

Allegations as to Unintentional Delay

The requirements for relief under the provisions of 37 C.F.R. §1.137(b) are: petition, fee, reply, showing of unintentional delay, and–where appropriate–a terminal disclaimer and fee.

---

[1] 35 U.S.C. §133 provides:
35 U.S.C. §133 Time for prosecuting application.
Upon failure of the applicant to prosecute the application within six months after any action therein, of which notice has been given or mailed to the applicant, or within such shorter time, not less than thirty days, as fixed by the Commissioner in such action, the application shall be regarded as abandoned by the parties thereto, unless it be shown to the satisfaction of the Commissioner that such delay was unavoidable.

[2] Therefore, by example, an unavoidable delay in the payment of the Filing Fee might occur if a reply is shipped by the US Postal Service, but due to catastrophic accident, the delivery is not made.

[3] See: *Changes to Patent Practice and Procedure*; *Final Rule Notice*, 62 *Fed. Reg.* at 53158-59 (October 10, 1997), 1203 *Off. Gaz. Pat. Office* at 86-87 (October 21, 1997).

[4] See: In re Application of G, 11 USPQ2d 1378, 1380 (Comm'r Pats. 1989).

[5] See: Diligence in Filing Petitions to Revive and Petitions to Withdraw the Holding of Abandonment, 1124 Off. Gaz. Pat. Office 33 (March 19, 1991). It was and is Petitioner's burden to exercise diligence in seeking either to have the holding of abandonment withdrawn or the application revived. See 1124 Off. Gaz. Pat. Office supra.

[6] Therefore, by example, an unintentional delay in the reply might occur if the reply and transmittal form are to be prepared for shipment by the US Postal Service, but other pressing matters distract one's attention and the mail is not timely deposited for shipment.

It appears that Petitioner has satisfied the requirements of the regulation.

CONCLUSION

Because Petitioner appears to have satisfied the regulatory requirements, regulation, the petition under 37 C.F.R. §1.137(b) is **granted**.

The application is released to the Examiner in Technology Center 3700 for further processing in due course.

Telephone inquiries concerning this decision may be directed to the undersigned at (571) 272-3214.

John J. Gillon, Jr.
Senior Attorney
Office of Petitions

UNITED STATES PATENT AND TRADEMARK OFFICE

Commissioner for Patents
United States Patent and Trademark Office
P.O. Box 1450
Alexandria, VA 22313-1450
www.uspto.gov

THOMAS A. BECK, ESQ.
6136 WEST KIMBERLY WAY
GLENDALE, AZ 85308

MAILED

MAR 2 9 2010

OFFICE OF PETITIONS

In re Application of
Vijay K. Naik, et al.
Application No. 10/367,444
Filed: February 19, 2003
Attorney Docket No.

DECISION ON PETITION

This is a decision on the petition, filed February 28, 2007 and supplemented on January 14, 2010, which is being treated as a petition under 37 CFR 1.8(b), requesting withdrawal of the holding of abandonment in the above-identified application.

The petition is **GRANTED**.

Petitioner requests the Notice of Abandonment mailed December 24, 2009 for failure to respond to the non-final Office action be withdrawn as petitioner timely filed a response. As evidenced by the attached reply with a certificate of mailing date of June 21, 2007 a response was timely filed, and as shown by the itemized copy of the post card receipt date stamped June 25, 2007 was received by the USPTO.

It is also noted that petitioner filed request to change the correspondence address on February 28, 2007. The request is hereby accepted and all future correspondences will be sent to the above listed address.

Telephone inquiries concerning this decision should be directed to April M. Wise at 571-272-1642. All other inquiries concerning the examination or status of this application should be directed to the Technology Center.

This application is being referred to the Office of Patent Application Papers for pre-examination processing of the reply received with February 26, 2008.

/Carl Friedman/
Carl Friedman
Petitions Examiner
Office of Petitions

UNITED STATES PATENT AND TRADEMARK OFFICE

Commissioner for Patents
United States Patent and Trademark Office
P.O. Box 1450
Alexandria, VA 22313-1450
www.uspto.gov

COPY MAILED

SEP 07 2005

OFFICE OF PETITIONS

POULSEN ROSER PACIFIC, INC.
620 SOUTH FRONT STREET
CENTRAL POINT OR 97502

In re Application of	:	
Hiroshi Hayakawa	:	
Application No. 10/367,447	:	ON PETITION
Filed: February 14, 2003	:	
Attorney Docket No. None	:	

This is a decision on the petition under 37 CFR 1.137(b), filed June 22, 2005, to revive the above-identified application.

The petition is **DISMISSED**.

Any request for reconsideration of this decision must be submitted within TWO (2) MONTHS from the mail date of this decision. Extensions of time under 37 CFR 1.136(a) are permitted. The reconsideration request should include a cover letter entitled "Renewed Petition under 37 CFR 1.137(b)." This is **not** final agency action within the meaning of 5 U.S.C. § 704.

A grantable petition under 37 CFR 1.137(b)[1] must be accompanied by: (1) the required reply,[2] unless previously filed; (2) the petition fee as set forth in 37 CFR 1.17(m); (3) a statement that the entire delay in filing the required reply from the due date for the reply until the filing of a grantable petition pursuant to 37 CFR 1.137(b) was unintentional; and (4) any terminal disclaimer (and fee as set forth in 37 CFR 1.20(d)) required by 37 CFR 1.137(c). Where there is a question as to whether either the abandonment or the delay in filing a petition under 37 CFR 1.137 was unintentional, the Commissioner may require additional information. See MPEP 711.03(c)(III)(C) and (D). The instant petition lack(s) item(s) (1).

The statement under 37 CFR 3.73(b), filed with the instant petition was not accompanied by a copy of the recorded assignment or reference the Reel and Frame number of the recorded assignment. Additionally, the title of Ken Rynearson and Deniese Dahl were not provided.

---

[1] As amended effective December 1, 1997. See Changes to Patent Practice and Procedure; Final Rule Notice, 62 Fed. Reg. 53131, 53194-95 (October 10, 1997), 1203 Off. Gaz. Pat. Office 63, 119-20 (October 21, 1997).

[2] In a nonprovisional application abandoned for failure to prosecute, the required reply may be met by the filing of a continuing application. In an application or patent, abandoned or lapsed for failure to pay the issue fee or any portion thereof, the required reply must be the payment of the issue fee or any outstanding balance thereof.

Further correspondence with respect to this matter should be addressed as follows:

By mail: Mail Stop PETITIONS
Commissioner for Patents
Post Office Box 1450
Alexandria, VA 22313-1450

By hand: Customer Window located at:

Randolph Building
401 Dulany Street
Alexandria, VA 22314

By fax: (571) 273-8300
ATTN: Office of Petitions

Telephone inquiries concerning this decision should be directed to the undersigned at (571) 272-3208.

Karen Creasy

Karen Creasy
Petitions Examiner
Office of Petitions
Office of the Deputy Commissioner
for Patent Examination Policy

UNITED STATES PATENT AND TRADEMARK OFFICE

Commissioner for Patents
United States Patent and Trademark Office
P.O. Box 1450
Alexandria, VA 22313-1450
www.uspto.gov

POULSEN ROSER PACIFIC, INC.
620 SOUTH FRONT STREET
CENTRAL POINT OR 97502

COPY MAILED

JUL 28 2006

OFFICE OF PETITIONS

In re Application of :
Hiroshi Hayakawa :
Application No. 10/367,447 :
Filed: Feruary 14, 2003 :
For: CLEMATIS PLANT'C. FAIRY BLUE' :

ON PETITION

This is a decision on the renewed petition under 37 CFR 1.137(b), filed October 11, 2005, to revive the above-identified application.

The petition is again **DISMISSED**.

Any request for reconsideration of this decision must be submitted within TWO (2) MONTHS from the mail date of this decision. Extensions of time under 37 CFR 1.136(a) are permitted. The reconsideration request should include a cover letter entitled "Renewed Petition under 37 CFR 1.137(b)." This is **not** a final agency action within the meaning of 5 U.S.C. § 704.

A grantable petition under 37 CFR 1.137(b)[1] must be accompanied by: (1) the required reply,[2] unless previously filed; (2) the petition fee as set forth in 37 CFR 1.17(m); (3) a statement that the entire delay in filing the required reply from the due date for the reply until the filing of a grantable petition pursuant to 37 CFR 1.137(b) was unintentional; and (4) any terminal disclaimer (and fee as set forth in 37 CFR 1.20(d)) required by

---

[1] As amended effective December 1, 1997. See Changes to Patent Practice and Procedure; Final Rule Notice, 62 Fed. Reg. 53131, 53194-95 (October 10, 1997), 1203 Off. Gaz. Pat. Office 63, 119-20 (October 21, 1997).

[2] In a nonprovisional application abandoned for failure to prosecute, the required reply may be met by the filing of a continuing application. In an application or patent, abandoned or lapsed for failure to pay the issue fee or any portion thereof, the required reply must be the payment of the issue fee or any outstanding balance thereof.

37 CFR 1.137(c). Where there is a question as to whether either the abandonment or the delay in filing a petition under 37 CFR 1.137 was unintentional, the Commissioner may require additional information. See MPEP 711.03(c)(III)(C) and (D). The instant petition lacks item(s) (1).

The Office is in receipt of the statement under 37 CFR 3.73(b), submitted with the instant petition on October 11, 2005. However, **no** reply to the Non-final Rejection mailed December 17, 2003, has been received.

Petitioner is strongly encouraged to seek a Registered Practitioner with the USPTO.

Further correspondence with respect to this matter should be addressed as follows:

By mail: Mail Stop PETITIONS
Commissioner for Patents
Post Office Box 1450
Alexandria, VA 22313-1450

By hand: Customer Window located at:

Randolph Building
401 Dulany Street
Alexandria, VA 22314

By fax: (571) 273-8300
ATTN: Office of Petitions

Telephone inquiries concerning this decision should be directed to the undersigned at (571) 272-3208.

Karen Creasy

Karen Creasy
Petitions Examiner
Office of Petitions

UNITED STATES PATENT AND TRADEMARK OFFICE

Commissioner for Patents
United States Patent and Trademark Office
P.O. Box 1450
Alexandria, VA 22313-1450
www.uspto.gov

POULSEN ROSER PACIFIC, INC.
620 SOUTH FRONT STREET
CENTRAL POINT OR 97502

COPY MAILED

MAR 28 2007

OFFICE OF PETITIONS

In re Application of	:	
Hiroshi Hayakawa	:	
Application No. 10/367,447	:	DECISION GRANTING PETITION
Filed: February 14, 2003	:	UNDER 37 CFR 1.137(b)
For: CLEMATIS PLANT 'C FAIRY BLUE'	:	

This is a decision on the renewed petition under 37 CFR 1.137(b), filed October 24, 2006, to revive the above-identified application.

The petition is **GRANTED**.

The petition satisfies the conditions for revival pursuant to the provisions of 37 CFR 1.137(b) in that (1) the reply in the form of an amendment; (2) the petition fee; and (3) the required statement of unintentional delay have been received. Accordingly, the reply to the Nonfinal Rejection of December 17, 2003, is accepted as having been unintentionally delayed.

A one month extension of time fee is necessary for the above petition. Therefore, the fee has been charged to petitioner's deposit account as authorized in the paper filed September 28, 2006.

Telephone inquiries concerning this decision should be directed to the undersigned at (571) 272-3208.

This matter is being referred to Technology Center AU 1661.

Karen Creasy

Karen Creasy
Petitions Examiner
Office of Petitions

UNITED STATES PATENT AND TRADEMARK OFFICE

Commissioner for Patents
United States Patent and Trademark Office
P.O. Box 1450
Alexandria, VA 22313-1450
www.uspto.gov

MELVIN D. ROBINSON
39 AUDUBON TRACE
SAINT FRANCISVILLE, LA 70775

COPY MAILED
MAY 19 2006
OFFICE OF PETITIONS

In re Application of	:	
Melvin Robinson	:	
Application No. 10/367,449	:	DECISION
Filed: February 14, 2003	:	ON PETITION
Title: MULTI-PURPOSE GOLF	:	
TOOL	:	

This is a decision on the "REQUEST WITHDRAWAL OF THE HOLDING OF ABANDONMENT per Rule 37 CFR 1.181A," filed November 28, 2005 (and resubmitted February 21, 2006).

The petition under § 1.181 is **GRANTED**.

The above-identified application became abandoned for failure to file a timely response to the Notice Regarding Drawings mailed May 24, 2005. The Notice set a TWO-MONTH non-extendable period for reply. No reply was considered received, until September 19, 2005. A Notice of Abandonment was mailed on November 2, 2005.

In response, applicant filed the instant petition. Applicant asserts that new drawings were timely submitted in response to the Notice. Applicant states that the drawing requirement was sent to the wrong address. Nonetheless, he responded within sixty days. Moreover, he has no idea why the drawings were not posted in the record of the application until September 2005. Per clarification by telephone conversation with the undersigned on April 24, 2006, as proof of earlier receipt of the drawings in the Office, applicant asserts that a draftsperson (Clifton Randolph) reviewed the new drawings mailed July 14, 2005 and faxed petitioner back his changes for approval. In support thereof, petitioner submits, among other things, a copy of his

cover letter dated July 14, 2005 (transmitting new drawings) and a copy of the facsimile cover and the drawings as faxed back to him by a draftsperson (all imprinted with a July 29, 2005 facsimile transmission date).

The petition has been considered, and the prosecution history reviewed, and it has been determined that withdrawal of the holding of abandonment is warranted. A review of the drawings of record in the application reveals that the drawings do not bear an Office date of receipt. It has been determined that the entry of a date of receipt in the Office records of September 19, 2005 is in error. The evidence, including an investigation into the processing of the paper, is persuasive that the drawings were received in the Office on July 20, 2005. The record has been corrected to show a date of receipt for the drawings of July 20, 2005. July 20, 2005 is within the two-month period for reply to the Notice mailed May 24, 2005.

In view thereof, the notice of abandonment mailed November 2, 2005 is hereby **VACATED**, and the holding of abandonment is hereby **WITHDRAWN**.

This decision is limited to the facts of this case. Petitioner is reminded that in the future a petition to withdraw the holding of abandonment will likely be dismissed for failure to either use certificate of mailing practice under 37 CFR 1.8; deposit in express mail pursuant to 37 CFR 1.10; or a postcard receipt as provided in MPEP 503 (and maintain copies of the original documents showing use of these practices). These are means by which an applicant can ensure that they have adequate proof of timely filing of a response.

The Office of Patent Publication has been advised of this decision. The application file is, thereby, being forwarded to the Office of Patent Publication for processing into a patent.

Telephone inquiries concerning this decision should be directed to the undersigned at (571) 272-3219.

Nancy Johnson
Senior Petitions Attorney
Office of Petitions

UNITED STATES PATENT AND TRADEMARK OFFICE

COMMISSIONER FOR PATENTS
UNITED STATES PATENT AND TRADEMARK OFFICE
P.O. BOX 1450
ALEXANDRIA, VA 22313-1450
www.uspto.gov

Paper No.

John T. McNeils
FENWICK & WEST LLP
Silicon Valley Center
801 California Street
Mountain View, CA 94041

MAILED

JAN 2 7 2005

Technology Center 2100

In re Application of:
Stephen P. Capps
Application No. 10/367,451
Filed: February 13, 2003
For: ATTENUATING AND AMPLIFYING USER INTERFACE THEMES

DECISION ON REQUEST TO WITHDRAW AS ATTORNEY OR AGENT

This is a decision on the Request To Withdraw from Representation under 37 CFR filed October 18, 2004.

A revocation And Substitution of Power of Attorney Under 37 CFR 1.136 was filed on January 03, 2005. The Power Of Attorney revoked all prior Powers Of Attorney and appointed SONNENSCHEIN NATH & ROSENTHAL LLP as the attorneys of record of the instant application. The Power Of Attorney of January 03, 2005 was accepted. Accordingly, all communications from the U.S. Patent and Trademark Office to applicant are to be conducted by SONNENSCHEIN NATH & ROSENTHAL LLP.

For the above stated reasons, the request is **DISMISSED AS MOOT**.

No further communication to you regarding this application will be made.

James R. Matthews

for Vincent N. Trans
Special Program Examiner
Technology Center 2100
Computer Architecture, Software, and
Information Security
(571) 272-3613

cc: SONNENSCHEIN NATH & ROSENTHAL LLP
P.O. Box 061080
Wacker Drive Station, Sears Tower
Chicago, IL 60606-1080

UNITED STATES PATENT AND TRADEMARK OFFICE

Commissioner for Patents
United States Patent and Trademark Office
P.O. Box 1450
Alexandria, VA 22313-1450
www.uspto.gov

GLENN PATENT GROUP
3475 EDISON WAY, SUITE L
MENLO PARK, CA 94025

COPY MAILED

JUN 20 2008

OFFICE OF PETITIONS

ON PETITION

In re Patent No. 7,017,117 :
Issued: March 21, 2006 :
Application No. 10/367,451 :
Filed: February 13, 2003 :
Attorney Docket Number: ONED0001 :

This is a decision on the petition filed December 12, 2006, to correct the assignee's name on the front of the Patent. The petition is being treated under 37 CFR 3.81(b)[1].

The petition is **DISMISSED**.

Petitioner states that the failure to include the correct name of the assignee on the Fee(s) Transmittal form PTOL-85(b) filed September 16, 2005 was inadvertent. Accordingly, petitioner requests that a certificate of correction be issued to reflect the correct name of the assignee on the front page of the Letters Patent.

37 CFR 3.81(b), effective June 25, 2004, reads:

> *After payment of the issue fee:* Any request for issuance of an application in the name of the assignee submitted after the date of payment of the issue fee, and any request for a patent to be corrected to state the name of the assignee, must state that the assignment was submitted for recordation as set forth in § 3.11 before issuance of the patent, and must include a request for a certificate of correction under § 1.323 of this chapter (accompanied by the fee set forth in § 1.20(a) and the processing fee set forth in § 1.17(i) of this chapter.

A request for a certificate of correction was filed October 26, 2006 and was dismissed in a decision mailed November 2, 2006 since the request was not accompanied by a petition under 37 CFR 3.81.

The petition fee in the amount of $130.00 and the fee for the certificate of correction in the amount of $100.00 have been applied.

---

[1] *See* Official Gazette of June 22, 2004

However, U.S. Patent and Trademark Office assignment records disclose that an assignment was submitted for recordation on February 13, 2003 and that the information provided on the Recordation Form Cover Sheet was recorded as submitted with ONEDOTO as the assignee, not ONEDOTO, INC. Accordingly, it would be appropriate for a certificate of correction to issue however, petitioner is required to resubmit a certificate of correction form, PTO/SB/44 without INC. in the name.

If need be, Petitioner may seek to correct the assignment records with the Assignments Branch but before a petition under 37 CFR 3.81 is granted, a corrected certificate of correction form (PTO/SB/44) as required by 37 CFR §§ 1.323 and 3.81(b) must be submitted.

Any request for reconsideration should be filed within **TWO MONTHS** of the date of this decision in order to be considered timely. This time period may not be extended pursuant to 37 CFR 1.136. The application will be retained in the Office of Petitions for **TWO (2) MONTHS** to await petitioner's reply to this decision.

Further correspondence with respect to this matter should be addressed as follows:

By mail: Mail Stop Petitions
Commissioner for Patents
P.O. Box 1450
Alexandria, VA 22313-1450

By FAX: (571) 273-8300
Office of Petitions

Telephone inquiries regarding this decision should be directed to the undersigned Petitions Attorney at (571) 272-3212.

Patricia Faison-Ball

Patricia Faison-Ball
Senior Petitions Attorney
Office of Petitions

UNITED STATES PATENT AND TRADEMARK OFFICE

Commissioner for Patents
United States Patent and Trademark Office
P.O. Box 1450
Alexandria, VA 22313-1450
www.uspto.gov

GLENN PATENT GROUP
3475 EDISON WAY, SUITE L
MENLO PARK, CA 94025

COPY MAILED

MAR 19 2009

OFFICE OF PETITIONS

In re Patent No. 7,017,117
Issued: March 21, 2006
Application No. 10/367,451
Filed: February 13, 2003
Attorney Docket Number: ONED0001

ON PETITION

This is a decision on the request for reconsideration filed March 6, 2009, under 37 CFR 1.183 to correct the assignee's name on the front of the Patent. The petition is being treated under 37 CFR 3.81(b)[1].

The petition is **GRANTED**.

Petitioner states that the failure to include the correct name of the assignee on the Fee(s) Transmittal form PTOL-85(b) filed September 16, 2005 was inadvertent. Accordingly, petitioner requests that a certificate of correction be issued to reflect the correct name of the assignee on the front page of the Letters Patent.

37 CFR 3.81(b), effective June 25, 2004, reads:

> *After payment of the issue fee:* Any request for issuance of an application in the name of the assignee submitted after the date of payment of the issue fee, and any request for a patent to be corrected to state the name of the assignee, must state that the assignment was submitted for recordation as set forth in § 3.11 before issuance of the patent, and must include a request for a certificate of correction under § 1.323 of this chapter (accompanied by the fee set forth in § 1.20(a) and the processing fee set forth in § 1.17(i) of this chapter.

---

[1]Any request for issuance of an application in the name of the assignee submitted after the date of the payment of the issue fee, and any request that a patent be corrected to state the name of assignee must:

(A) state the assignment was submitted for recordation as set forth in 37 CFR §3.11 before issuance of the patent;
(B) provide a request for a certificate of correction §1.323;
(C) provide the fee set forth in 37 CFR §1.20 (a) and
(D) provide the processing fee set forth in 37 CFR §1.17(i)

A request for a certificate of correction was filed October 26, 2006 and was dismissed in a decision mailed November 2, 2006 since the request was not accompanied by a petition under 37 CFR 3.81. A petition filed December 12, 2006 was dismissed in a decision mailed June 20, 2008 because the certificate of correction form, PTO/SB/44, incorrectly identified the assignee in accordance with the information provided on the Recordation Form Cover Sheet and thus recorded with the USPTO.

Office assignment records however, reflect that ONEDOTO is the assignee of record. Accordingly, as the request complies with the provisions of 37 CFR 3.81(b), it would be appropriate for a certificate of correction to issue.

The proper fees for the petition and the certificate of correction have been applied.

Inquiries concerning this decision should be directed to the undersigned at (571) 272-3212. Any questions concerning the issuance of a certificate of correction should be directed to the Certificates of Correction Branch at (703) 305-8309.

This file is being referred to the Certificates of Correction Branch for issuance of a certificate of correction.

Patricia Faison-Ball

Patricia Faison-Ball
Senior Petitions Attorney
Office of Petitions

UNITED STATES PATENT AND TRADEMARK OFFICE

COMMISSIONER FOR PATENTS
UNITED STATES PATENT AND TRADEMARK OFFICE
P.O. BOX 1450
ALEXANDRIA, VA 22313-1450
www.uspto.gov

KEITH FRANTZ
401 WEST STATE STREET
SUITE 200
ROCKFORD, IL 61101

COPY MAILED

JUL 06 2007

OFFICE OF PETITIONS

In re Application of	:	
Eric Seger et al	:	
Application No. 10/367,459	:	DECISION ON PETITION
Filed: February 14, 2003	:	
For: METHODS AND APPARATUS FOR	:	
SENSING ANGULAR POSITION OF A	:	
ROTATABLE SHAFT	:	

This is a decision on the petition under 37 CFR 1.137(b), filed September 26, 2006, to revive the above-identified application.

The petition is **GRANTED.**

The application became abandoned for failure to timely reply within the meaning of 37 CFR 1.113 to the final Office action, mailed March 22, 2005, which set a shortened statutory period for reply of three (3) months. No extensions of time were obtained under the provisions of 37 CFR 1.136(a). Accordingly, the application became abandoned on June 23, 2005. A Notice of Abandonment was mailed on November 3, 2005.

The petition satisfies the requirements of 37 CFR 1.137(b) in that petitioner has supplied (1) the required reply in the form of a request for continued examination, $790 filing fee, and submission as required by 37 CFR 1.114, (2) the petition fee of $1,500, and (3) a proper statement of unintentional delay. Accordingly, the failure to timely reply to the final Office action of March 22, 2005 is accepted as being unintentionally delayed.

This application is being referred to Technology Center AU 2862 for processing the request for continued examination and for appropriate action in the normal course of business on the submission under 37 CFR 1.114 received September 26, 2006.

Telephone inquiries concerning this decision should be directed to the undersigned at (571) 272-3218.

Frances Hicks
Petitions Examiner
Office of Petitions

SPE RESPONSE FOR CERTIFICATE OF CORRECTION

Paper No.: _____

DATE : June 6, 2006

TO SPE OF : ART UNIT 3753

SUBJECT : Request for Certificate of Correction for Appl. No.: 10/367460 Patent No.: 6,988,510

Please respond to this request for a certificate of correction within 7 days.

Please review the requested changes/corrections as shown in the **COCIN** document(s) in the IFW application image. No new matter should be introduced, nor should the scope or meaning of the claims be changed.

Please complete the response (see below) and forward the completed response to scanning using document code **COCX**.

Magdalene Talley

Certificates of Correction Branch

703-308-9390 ext. 116

Thank You For Your Assistance

The request for issuing the above-identified correction(s) is hereby:

Note your decision on the appropriate box.

- [x] **Approved** — **All** changes apply.
- [ ] **Approved in Part** — Specify below which changes **do not** apply.
- [ ] **Denied** — State the reasons for denial below.

Comments: Complete Specification Not Printed in Patent. [illegible]

[illegible] 3753

SPE **Art Unit**

UNITED STATES PATENT AND TRADEMARK OFFICE

Commissioner for Patents
United States Patent and Trademark Office
P.O. Box 1450
Alexandria, VA 22313-1450
www.uspto.gov

RANDAL D. HOMBURG
P.O. BOX 10470
MIDWEST CITY OK 73140-1470

MAILED

NOV 09 2009

OFFICE OF PETITIONS

In re Patent No. 6,884,352 Issue Date: April 26, 2005 Application No. 10/367,461 Filed: February 14, 2003 Attorney Docket No. 2002-KENNEDY.LONNIE	: : : : :	DECISION ON PETITION

This is a decision on the petition under 37 CFR 1.378(c), filed September 04, 2009, to accept the unintentionally delayed payment of a maintenance fee for the above-identified patent.

The petition is **GRANTED**.

This patent expired on April 26, 2009 for failure to pay the three (3) and one-half year maintenance fee. Since this petition was submitted within twenty-four months after the six-month grace period provided in 37 CFR 1.362(e), the petition was timely filed under the provisions of 37 CFR 1.378(c).

The maintenance fee is hereby accepted and the above-identified patent is reinstated as of the mail date of this decision.

It is not apparent whether the person signing the statement of unintentional delay was in a position to have firsthand or direct knowledge of the facts and circumstances of the delay at issue. Nevertheless, such statement is being treated as having been made as the result of a reasonable inquiry into the facts and circumstances of such delay. In the event that such an inquiry has not been made, petitioner must make such an inquiry. If such inquiry results in the discovery that the delay in paying the maintenance fee under 37 CFR 1.378(c) was intentional, petitioner must notify the Office. Petitioner will not receive future correspondence related to maintenance fees for the patent unless a "Fee Address" Indication Form (see PTO/SB/47) is submitted.

Telephone inquiries concerning this decision should be directed to the undersigned at (571) 272-4231.

The patent file is being forwarded to Files Repository.

Michelle R. Eason
Paralegal Specialist
Office of Petitions

cc: **MARTIN G. OZINGA**
101 N. ROBINSON AVE.
CORPORATE TOWER, 13TH FLOOR
OKLAHOMA CITY, OK 73102

UNITED STATES PATENT AND TRADEMARK OFFICE

Commissioner for Patents
United States Patent and Trademark Office
P.O. Box 1450
Alexandria, VA 22313-1450
www.uspto.gov

KEITH FRANTZ
401 WEST STATE STREET
SUITE 200
ROCKFORD, IL 61101

COPY MAILED

FEB 0 / 2008

OFFICE OF PETITIONS

In re Application of	:	
Steven MORREIM	:	
Application No. 10/367,468	:	DECISION ON PETITION
Filed: February 14, 2003	:	
Attorney Docket No.	:	

This is a decision on the petition under the unintentional provisions of 37 CFR 1.137(b), filed September 27, 2007, to revive the above-identified application.

The petition is **GRANTED**.

The application became abandoned for failure to reply in a timely manner to the non-final Office action mailed, March 14, 2006, which set a shortened statutory period for reply of three (3) months. No extensions of time under the provisions of 37 CFR 1.136(a) were obtained. Accordingly, the application became abandoned on June 15, 2006.

The petition satisfies the conditions for revival pursuant to the provisions of 37 CFR 1.137(b) in that (1) the reply in the form of an amendment; (2) the petition fee of $750.00; and (3) the required statement of unintentional delay have been received. Accordingly, the reply to the non-final Office action of March 14, 2006 is accepted as having been unintentionally delayed.

Telephone inquiries concerning this decision should be directed to the undersigned at (571) 272-4231.

The application file is being referred to Technology Center AU 3652 for appropriate action on the concurrently filed amendment.

Michelle R. Eason

Michelle R. Eason
Paralegal Specialist
Office of Petitions

UNITED STATES PATENT AND TRADEMARK OFFICE

Commissioner for Patents
United States Patent and Trademark Office
P.O. Box 1450
Alexandria, VA 22313-1450
www.uspto.gov

MAIL

DEC 3 1 2007

DIRECTOR'S OFFICE
TECHNOLOGY CENTER 2600

Richard J. Minnich
Fay, Sharpe, Fagan, Minnich & McKee, LLP
Seventh Floor
1100 Superior Avenue
Cleveland OH 44114

In re Application of
Keli HAN, et al.
Application No. 10/367,472
Filed: February 14, 2003
For: **USER PROGRAMMABLE VOICE DIALING FOR MOBILE HANDSET**

DECISION *SUA SPONTE* WITHDRAWING HOLDING OF ABANDONMENT

This is a decision, *sua sponte*, withdrawing the holding of abandonment of the above-identified application.

The application was held abandoned for failure to respond in a timely and effective manner to the non-final Office action mailed August 16, 2006. A Notice of Abandonment was mailed February 26, 2007.

Applicant alleges to have timely filed a response to said Office communication on February 21, 2007 (with certificate of mailing dated February 16, 2007).

A review of the file record reveals that the original amendment filed on February 21, 2007 (certificate of mailing dated February 16, 2007) has been located and matched with the file.

Accordingly, although no petition to withdraw the holding of abandonment has been filed, the holding of abandonment is hereby withdrawn. The Notice of Abandonment mailed February 26, 2007 is hereby vacated.

The application is being forwarded to the examiner for further action in due course.

/Krista Zele/

Krista Zele
Special Program Examiner
Technology Center 2600
Communications

UNITED STATES PATENT AND TRADEMARK OFFICE

Commissioner for Patents
United States Patent and Trademark Office
P.O. Box 1450
Alexandria, VA 22313-1450
www.uspto.gov

MICROSOFT CORPORATION
ONE MICROSOFT WAY
REDMOND WA 98052-6399

COPY MAILED

SEP 2 1 2007

OFFICE OF PETITIONS

In re Application of
Blake et al.
Application No. 10/367,485
Filed: February 14, 20043:
Attorney Docket No.:302161.01

DECISION ON PETITION

This is a decision on the petition under 37 CFR 1.137(b), filed September 19, 2006 (supplemented on August 21, 2007), to revive the above-identified application.[1]

This above-identified application became abandoned for failure to timely file a reply to a Restriction Requirement mailed March 10, 2005. The Office Action set a one (1) month shortened statutory period for reply. No extensions of time were obtained under the provisions of 37 CFR 1.136(a). Accordingly, this application became abandoned on April 11, 2005. This decision preceded the mailing of a Notice of Abandonment.

This petition is hereby **GRANTED**.

The Office hereby acknowledges the receipt of the Response to the Restriction Requirement submitted with the instant petition.

This application is being forwarded to Technology Center 2629 for further processing.

Telephone inquiries concerning this matter should be directed to the undersigned at (571) 272-3215.

Charlema R. Grant

Charlema R. Grant
Petitions Attorney
Office of Petitions

---

[1]The September 19, 2006 petition was not signed.

UNITED STATES PATENT AND TRADEMARK OFFICE

Commissioner for Patents
United States Patent and Trademark Office
P.O. Box 1450
Alexandria, VA 22313-1450
www.uspto.gov

JONATHAN A. PLATT
RENNER, OTTO, BOISSELLE & SKLAR
NINETEENTH FLOOR
1621 EUCLID AVENUE
CLEVELAND OH 44115-2191

COPY MAILED

JUN 05 2006

OFFICE OF PETITIONS

In re Application of	:	
Ian J. Forster	:	
Application No. 10/367,515	:	ON PETITION
Filed: February 13, 2003	:	
Attorney Docket No. AVERP3411US	:	

This is a decision on the petition, filed June 2, 2006, under 37 CFR 1.313(c)(2) to withdraw the above-identified application from issue after payment of the issue fee.

The petition is **GRANTED**.

The above-identified application is withdrawn from issue for consideration of a submission under 37 CFR 1.114 (request for continued examination). See 37 CFR 1.313(c)(2).

Petitioner is advised that the issue fee paid on April 17, 2006, in the above-identified application cannot be refunded. If, however, the above-identified application is again allowed, petitioner may request that it be applied towards the issue fee required by the new Notice of Allowance.[1]

Telephone inquiries should be directed to the undersigned at (571) 272-3208.

The examiner of Technology Center AU 2876 will consider the request for continued examination under 37 CFR 1.114.

Karen Creasy

Karen Creasy
Petitions Examiner
Office of Petitions

---

[1] The request to apply the issue fee to the new Notice may be satisfied by completing and returning the new Issue Fee Transmittal Form PTOL-85(b), which includes the following language thereon: "Commissioner for Patents is requested to apply the Issue Fee and Publication Fee (if any) or re-apply any previously paid issue fee to the application identified above." Petitioner is advised that, whether a fee is indicated as being due or not, the Issue Fee Transmittal Form **must** be completed and timely submitted to avoid abandonment. Note the language in bold text on the first page of the Notice of Allowance and Fee(s) Due (PTOL-85).

UNITED STATES PATENT AND TRADEMARK OFFICE

COMMISSIONER FOR PATENTS
UNITED STATES PATENT AND TRADEMARK OFFICE
P.O. BOX 1450
ALEXANDRIA, VA 22313-1450
www.uspto.gov

Paper No. _____

Date : June 5, 2006

TO : Director, Office of Patent Publication

FROM : Office of the Deputy Commissioner
for Patent Examination Policy

SUBJECT : Withdrawal from Issue of

Applicant(s) :Ian J. Forster
Application No. :10/367,515
Filed :February 13, 2003

The above-identified application has been assigned Patent No. 7,055,753 and an issue date of June 6, 2006.

It is hereby directed that this application be withdrawn from issue at the request of the applicant.

Do not refund the issue fee.

The following erratum should be published in the Official Gazette if the above-identified application is published in the OG of June 6, 2006:

"All reference to Patent No. 7,055,753 to Ian J. Forster of United Kingdom for RFID DEVICE TESTER AND METHOD appearing in the Official Gazette of June 6, 2006 should be deleted since no patent was granted."

Karen Creasy

Karen Creasy
Petitions Examiner
Office of Petitions
Office of the Deputy Commissioner
for Patent Examination Policy

cc: Paul Harrison, MDW-4B03,(FAX-273-5468)
Deneise Boyd, MDE-3D39 (FAX-273-5124)
Mary Louise McAskill, ST-8C15 (FAX 305-4372)
Niomi Farmer, ST-8C14 (FAX-305-4372)
Mary E. Johnson (Cookie), MDE-7C71 (FAX 273-0038
Duane Davis P/OPC MDE-7D89

SPE RESPONSE FOR CERTIFICATE OF CORRECTION

DATE : 7/26/07

Paper No.: ___

TO SPE OF : ART UNIT 2812

SUBJECT : Request for Certificate of Correction for Appl. No.: 10/367520 Patent No: 7157775 B2

A response is requested with respect to a request for a certificate of correction.

With respect to the change(s) requested to correct Office and/or Applicant's errors, should the patent read as shown in the certificate of correction attached herewith or the COCIN document(s), in IFW images for the above-identified patented application? No new matter should be introduced, nor should the scope or meaning of the claims be changed.

If the response is for an IFW, within 7 days, please complete and forward the response, to the employee (named below) via scanning into application images, using document code **COCX**.

If the response is for a paper file wrapper, please complete the response and forward the response with the paper file wrapper, to the employee (named below), within 7 days, to:

Certificates of Correction Branch (CofC)
South Tower - 9A22
Palm Location 7580

VIRGINIA TOLBERT
Certificates of Correction Branch
703-308-9390 ext. 113

Thank You For Your Assistance

The request for issuing the above-identified correction(s) is hereby:
Note your decision on the appropriate box.

- ☒ **Approved** — All changes apply.
- ☐ **Approved in Part** — Specify below which changes **do not** apply.
- ☐ **Denied** — State the reasons for denial below.

Comments: _____

SPE

2812
Art Unit

UNITED STATES PATENT AND TRADEMARK OFFICE

COMMISSIONER FOR PATENTS
UNITED STATES PATENT AND TRADEMARK OFFICE
P.O. BOX 1450
ALEXANDRIA, VA 22313-1450
www.USPTO.GOV

Paper No. 4

BAKER BOTTS
2001 ROSS AVENUE
SUITE 600
DALLAS, TX 75201-2980

COPY MAILED

JUL 0 7 2003

OFFICE OF PETITIONS

In re Application of	:	
Dagobert (nmi) Feld et al	:	
Application No. 10/367,522	:	NOTICE
Filed: February 14, 2003	:	
Attorney Docket No. 066821.0148	:	

This is a notice regarding your request for acceptance of a fee deficiency submission under 37 CFR 1.28. On September 1, 1998, the Court of Appeals for the Federal Circuit held that 37 CFR 1.28(c) is the sole provision governing the time for correction of the erroneous payment of the issue fee as a small entity. **See DH Technology v. Synergystex International, Inc. 154 F.3d 1333, 47 USPQ2d 1865 (Fed. Cir. Sept. 1, 1998).**

The Office no longer investigates or rejects original or reissue applications under 37 CFR 1.56. **1098 Off. Gaz. Pat. Office 502 (January 3, 1989)**. Therefore, nothing in this Notice is intended to imply that an investigation was done.

Your fee deficiency submission under 37 CFR 1.28 is hereby **ACCEPTED**.

Inquiries related to this communication should be directed to the Office of Petitions Staff at (703) 305-9285.

This file is being forwarded to Technology Center AU 3672.

Wan Laymon
Petitions Examiner
Office of Petitions
Office of the Deputy Commissioner
for Patent Examination Policy

UNITED STATES PATENT AND TRADEMARK OFFICE

COMMISSIONER FOR PATENTS
UNITED STATES PATENT AND TRADEMARK OFFICE
P.O. BOX 1450
ALEXANDRIA, VA 22313-1450
www.uspto.gov

MICHAEL J. MARCIN
FAY KAPLUN & MARCIN, LLP
150 BROADWAY, SUITE 702
NEW YORK, NEW YORK 10038

COPY MAILED

NOV 0 2 2005

OFFICE OF PETITIONS

In re Application of	:	
Pierre-Alain Darlet et al.	:	
Application No. 10/367,525	:	DECISION ON PETITION
Filed: February 14, 2003	:	37 CFR 1.137(b)
Attorney Docket No. 1999.004 C1	:	

This is a decision on the petition under 37 CFR §1.137(b), filed June 23, 2005, to revive the above-identified application.

The petition is **GRANTED**.

This application became abandoned for failure to submit the issue fee and publication fee in a timely manner in reply to the Notice of Allowance and Fee(s) Due/Notice of Allowability mailed February 17, 2005, which set a statutory period for reply of three (3) months. Accordingly, the application became abandoned on May 18, 2005. No Notice of Abandonment was mailed to the above-identified addressee.

The petition satisfies the conditions for revival pursuant to the provisions of 37 CFR §1.137(b) in that (1) the issue fee ($1400) and publication fee ($300) at the time of filing the petition; (2) the petition fee of $1500.00 (for a large entity) at the time of filing the petition; and (3) the required statement of unintentional delay have been received. Accordingly, the reply to the Notice of Allowance mailed February 17, 2005 is accepted as having been unintentionally delayed.

This matter is being referred to the Office of Publications to be processed into a patent.

Telephone inquiries concerning this decision should be directed to Angela Ortiz at (571) 272-6051, or in her absence, the undersigned at (571) 272-3217.

Frances Hicks for
Brian Hearn
Petitions Examiner
Office of Petitions

UNITED STATES PATENT AND TRADEMARK OFFICE

Commissioner for Patents
United States Patent and Trademark Office
P.O. Box 1450
Alexandria, VA 22313-1450
www.uspto.gov

Paper No. 080204

SEP - 8 2004

LADAS & PARRY
5670 WILSHIRE BOULEVARD, SUITE 2100
LOS ANGELES, CA 90036

In re Application of:	:	
KAO-YUAN CHANG	:	
Serial No.: 10/367,532	:	DECISION ON REQUEST TO WITHDRAW
Filed: May 16, 2000	:	FROM RECORD
Attorney Docket No.: **B-4969 620701-6**	:	

This is a decision on the request to withdraw as attorney/agent of record under 37 C.F.R. § 1.36, filed October 03, 2003.

A grantable request to withdraw as attorney of record must be signed by every attorney seeking to withdraw or contain a clear indication that one attorney is signing on behalf of others. A request to withdraw will not be approved unless at least thirty (30) days would remain between the date of approval and the later of the expiration date of a time to file a response or the expiration date of the maximum time period, which can be extended under 37 C.F.R. § 1.136(a).

The request meets all the above stated requirements. The request was signed by Richard P. Berg, on behalf of himself and all the attorneys/agents of record. There is at least thirty (30) days remaining between the date of approval and the later of the expiration date of a time to file a response or the expiration date of the maximum time period.

The request is **APPROVED**.

There are no attorneys of record at this time.

All future communications from the Office will be directed to the inventor, Kao-Yuan Chang, at the below address, until otherwise notified by applicant.

Inquiries related to this decision should be directed to Lissi Marquis at (571) 272-1596.

Lissi Marquis, Special Programs Examiner
Technology Center 2800
Semiconductors, Electrical and Optical
Systems and Components

cc: KAO-YUAN CHANG
NO. 155, CHENG-HSIN ST., JEN-WU HSIANG
KAOHSIUNG HSIEN, TAIWAN, R.O.C.

UNITED STATES PATENT AND TRADEMARK OFFICE

Commissioner for Patents
United States Patent and Trademark Office
P.O. Box 1450
Alexandria, VA 22313-1450
www.uspto.gov

COPY MAILED

FEB 0 5 2008

OFFICE OF PETITIONS

KLAUBER & JACKSON
411 HACKENSACK AVENUE
HACKENSACK, NJ 07601

In re Application of
Richard WALMSLEY et al.
Application No. 10/367,572
Filed: February 14, 2003
Attorney Docket No. 2721-1-001

DECISION ON PETITION

This is a decision on the petition under the unintentional provisions of 37 CFR 1.137(b), filed October 31, 2007, to revive the above-identified application.

The petition is **GRANTED**.

The application became abandoned for failure to timely reply within the meaning of 37 CFR 1.113 to the final Office action, mailed October 10, 2006, which set a shortened statutory period for reply of three (3) months. The proposed reply required for consideration of a petition to revive must be a Notice of Appeal (and appeal fee required by 37 CFR 41.20(b)(2), an amendment that *prima facie* places the application in condition for allowance, a Request for Continued Examination and submission (37 CFR 1.114), or the filing of a continuing application under 37 CFR 1.53(b). See MPEP 711.03(c)(III)(A)(2). Since the amendment submitted does not *prima facie* place the application in condition for allowance, the reply required must be a Notice of Appeal (and appeal fee), RCE, or the filing of a continuing application under 37 CFR 1.53(b). A three (3) month extension of time pursuant to the provisions of 37 CFR 1.136(a) was obtained. Accordingly, the date of abandonment of this application is April 11, 2007.

The petition satisfies the requirements of 37 CFR 1.137(b) in that petitioner has supplied (1) the reply in the form of a Request for Continued Examination (RCE) and fee of $405.00, and the submission required by 37 CFR 1.114; (2) the petition fee of $770.00; and (3) a proper statement of unintentional delay. Accordingly, the reply to the final Office Action of October 10, 2006 is accepted as having been unintentionally delayed.

Telephone inquiries concerning this decision should be directed to the undersigned at (571)-272-4231.

This application is being referred to Technology Center AU 3735 for processing of the RCE and for appropriate action by the Examiner in the normal course of business on the amendment submitted in accordance with 37 CFR 1.114.

Michelle R. Eason
Paralegal Specialist
Office of Petitions

UNITED STATES PATENT AND TRADEMARK OFFICE

COMMISSIONER FOR PATENTS
UNITED STATES PATENT AND TRADEMARK OFFICE
P.O. BOX 1450
ALEXANDRIA, VA 22313-1450
WWW.USPTO.GOV

Paper No. 6

COPY MAILED

AUG 1 5 2003

OFFICE OF PETITIONS

COOLEY GODWARD, LLP
3000 EL CAMINO REAL
5 PALO ALTO SQUARE
PALO ALTO CA 94306

In re Application of
DeBenedictis, Voevodkin & Black
Application No. 10/367,582
Filed: February 14, 2003
Attorney Docket No. RTEC-008/01US
For: METHOD AND APPARATUS FOR TREATING SKIN USING PATTERNS OF OPTICAL ENERGY

: DECISION ACCORDING STATUS
: UNDER 37 CFR 1.47(a)

This is in response to the petition under 37 CFR 1.47(a), filed August 6, 2003 (certificate of mailing date August 1, 2003).

The petition is granted.

Petitioners have shown that the non-signing inventor, Michael Black, has refused to join in the filing of the above-identified application after having been presented with the application papers. Specifically, the declaration/statement of facts of Attorney Cliff Z. Liu establishes that the inventor was hand delivered the application papers, including the specification, claims and drawings, on October 30, 2002, but the inventor refused to sign the declaration. Petitioner has submitted a declaration in compliance with 37 CFR 1.63 and 1.64.

This application and papers have been reviewed and found in compliance with 37 CFR 1.47(a). This application is hereby accorded Rule 1.47(a) status.

As provided in Rule 1.47(c), this Office will forward notice of this application's filing to the non-signing inventor at the address given in the petition. Notice of the filing of this application will also be published in the Official Gazette.

After this decision is mailed, the above-identified application will be forwarded to Technology Center 2800 for examination in due course.

Telephone inquiries should be directed to the undersigned at (703) 308-6712.

E. Shirene Willis

E. Shirene Willis
Senior Petitions Attorney
Office of Petitions

UNITED STATES PATENT AND TRADEMARK OFFICE

COMMISSIONER FOR PATENTS
UNITED STATES PATENT AND TRADEMARK OFFICE
P.O. BOX 1450
ALEXANDRIA, VA 22313-1450
WWW.USPTO.GOV

MICHAEL BLACK
560 TRINIDAD LANE
FOSTER CITY CA 94404

COPY MAILED

AUG 15 2003

OFFICE OF PETITIONS

LETTER

In re Application of
DeBenedictis, Voevodkin & Black
Application No. 10/367,582
Filed: February 14, 2003
Attorney Docket No. RTEC-008/01US
For: METHOD AND APPARATUS FOR TREATING SKIN USING PATTERNS OF OPTICAL ENERGY

Dear Mr. Black:

You are named as a joint inventor in the above identified United States patent application, filed under the provisions of 35 U.S.C. 116 (United States Code), and 37 CFR 1.47(a), Rules of Practice in Patent Cases. Should a patent be granted on the application you will be designated therein as a joint inventor.

As a named inventor you are entitled to inspect any paper in the file wrapper of the application, order copies of all or any part thereof (at a prepaid cost per 37 CFR 1.19) or make your position of record in the application. Alternatively, you may arrange to do any of the preceding through a registered patent attorney or agent presenting written authorization from you. If you care to join the application, counsel of record (see below) would presumably assist you. Joining in the application would entail the filing of an appropriate oath or declaration by you pursuant to 37 CFR 1.63.

Requests for information regarding your application should be directed to the File Information Unit at (703)308-2733. Information regarding how to pay for and order a copy of the application, or a specific paper in the application, should be directed to Certification Division at (703)308-9726 or 1(800)972-6382 (outside the Washington D.C. area).

Telephone inquiries regarding this communication should be directed to the undersigned at (703) 308-6712.

E. Shirene Willis

E. Shirene Willis
Senior Petitions Attorney
Office of Petitions

ATTORNEY OF RECORD: COOLEY GODWARD, LLP
3000 EL CAMINO REAL
5 PALO ALTO SQUARE
PALO ALTO CA 94306

UNITED STATES PATENT AND TRADEMARK OFFICE

Commissioner for Patents
United States Patent and Trademark Office
P.O. Box 1450
Alexandria, VA 22313-1450
www.uspto.gov

COOLEY GODWARD
ATTN: PATENT GROUP
FIVE PALO ALTO SQUARE
3000 EL CAMINO REAL
PALO ALTO, CA 94306-2155

COPY MAILED

MAY 0 4 2006

OFFICE OF PETITIONS

In re Application of	:	
Len Debenedictis et al	:	
Application No. 10/367,582	:	DECISION ON PETITION
Filed: February 14, 2003	:	TO WITHDRAW
Attorney Docket No. RTEC-008/01US	:	FROM RECORD
	:	

This is a decision on the Request to Withdraw as attorney or agent of record under 37 C.F.R. § 1.36(b), filed June 7, 2005.

The petition is **NOT APPROVED** as moot.

A review of the file record indicates that the previously appointed power of attorney has been revoked by the assignee. Accordingly, the request to withdraw under 37 C.F.R. § 1.36(b) is moot.

All future communications from the Office will continue to be directed to the below-listed address until otherwise notified by applicants.

This application is being referred to Technology Center AU 3735 to await a reply to the non-final Office action mailed February 24, 2006.

Telephone inquires concerning this decision should be directed to Wan Laymon at 571-272-3220.

Dean Potter for

Amelia Au
Petitions Examiner
Office of Petitions

cc: FENWICK & WEST
SILICON VALLEY CENTER
801 CALIFORNIA STREET
MOUNTAIN VIEW, CA 94041

UNITED STATES PATENT AND TRADEMARK OFFICE

COMMISSIONER FOR PATENTS
UNITED STATES PATENT AND TRADEMARK OFFICE
P.O. BOX 1450
ALEXANDRIA, VA 22313-1450
www.uspto.gov

JJGJR.: 07-04

Paper No: __

TOWNSEND AND
TOWNSEND AND CREW LLP
TWO EMBARCADERO CENTER, 8TH FLOOR
SAN FRANCISCO CA 94111

COPY MAILED
JUL 1 3 2004
OFFICE OF PETITIONS

In re Application of
Kim, et al. :
Application No. 10/367,591 : ON PETITION
Filed: 13 February, 2003 :
Attorney Docket No. 021524-000900US :

This is a decision on the petition under ¶(a) of 37 C.F.R. §1.47, filed on 22 January, 2004

The petition is **DISMISSED** due to the prior abandonment of the application.

NOTES:

(1) Any petition (and fee) must include a petition under 37 C.F.R. §1.137(b) (as to unintentional delay) and must be submitted within two (2) months from the mail date of this decision. Extensions of time under 37 C.F.R. §1.136(a) are permitted. The reconsideration request should include a cover letter entitled "Petition under 37 C.F.R. §1.137(b)";

(2) Thereafter, there will be no further reconsideration of this matter.

BACKGROUND

The record indicates:

- the application was filed on 13 February, 2003, without, *inter alia*, a fully executed oath or declaration; and

- on 29 April, 2003, the Office mailed a Notice to File Missing Parts with a reply due absent extension of time on or before Monday, 30 June, 2003;

- on 29 September, 2003, Petitioner filed, *inter alia*, a request and fee for a three- (3-) month extension of time, however the oath declaration included in the filing was a partially executed oath/declaration in that the signature of Joung Joon Ho was not included along with that of the other six signing inventors;

- the application went abandoned as a matter of law after midnight Monday, 29 September, 2003;

- Petitioner filed the instant papers, including the oath/declaration of Joung Joon Ho and a request and fee for second three- (3-) month extension of time–this one improper--on 22 January, 2004.

Although there is an indication that Petitioner now has obtained signatures of all inventors, the application went abandoned as a matter of law after midnight 29 September, 2004.

CONCLUSION

For the foregoing reasons, the instant petition is **dismissed** because the instant application previously went abandoned.

ALTERNATIVE VENUE

Petitioner must, to avoid irretrievable abandonment, file a petition and fee as set forth above under 37 C.F.R. §1.137(b), and state therein that "the entire delay in filing the required reply from the due date for the reply until the filing of a grantable petition (with fee) pursuant to 37 C.F.R. §1.137(b) was unintentional."

Petitioner is cautioned that failure to submit such a petition 37 C.F.R. §1.137(b) timely may be viewed as intentional delay and an absolute bar to revival.

Further correspondence with respect to this matter should be addressed as follows:

By mail: (Effective 1 May, 2003)[1]
Commissioner for Patents
P.O. Box 1450
Alexandria, VA 22313-1450

By FAX: (703) 872-9306 (IFW Formal Filings)
ATTN.: Office of Petitions

By hand: Customer Service Window
Lobby/Room 1B03
Crystal Plaza Two
2011 South Clark Place
Arlington, VA 22202

Telephone inquiries concerning this decision may be directed to the undersigned at (703) 305-9199.

John J. Gillon, Jr.
Senior Attorney
Office of Petitions

[1] To determine the appropriate addresses for other subject-specific correspondence, refer to the USPTO Web site at www.uspto.gov.

UNITED STATES PATENT AND TRADEMARK OFFICE

COMMISSIONER FOR PATENTS
UNITED STATES PATENT AND TRADEMARK OFFICE
P.O. BOX 1450
ALEXANDRIA, VA 22313-1450
www.uspto.gov

JJGJR.: 07-04

Paper No: __

TOWNSEND AND
TOWNSEND AND CREW LLP
TWO EMBARCADERO CENTER, 8TH FLOOR
SAN FRANCISCO CA 94111

COPY MAILED

SEP 14 2004

OFFICE OF PETITIONS

In re Application of
Kim, et al. :
Application No. 10/367,591 : ON PETITION
Filed: 13 February, 2003 :
Attorney Docket No. 021524-000900US :

This is a decision on the petition under ¶(a) of 37 C.F.R. §1.47, filed on 27 August, 2004

The petition is **DISMISSED**.

NOTES:

(1) Any petition (and fee) must include a petition under 37 C.F.R. §1.47 and must be submitted within two (2) months from the mail date of this decision. Extensions of time under 37 C.F.R. §1.136(a) are permitted. The reconsideration request should include a cover letter entitled "Petition under 37 C.F.R. §1.47";

(2) Thereafter, there will be no further reconsideration of this matter.

BACKGROUND

The record indicates:

- the application was filed on 13 February, 2003, without, *inter alia*, a fully executed oath or

declaration; and

- on 29 April, 2003, the Office mailed a Notice to File Missing Parts with a reply due absent extension of time on or before Monday, 30 June, 2003;

- it now appears that on 29 September, 2003–in addition, *inter alia*, a request and fee for a three- (3-) month extension of time, and an oath/declaration signed by all inventors save Joung Joon Ho– Petitioner filed a petition under was not included along with that of the other six signing inventors;

- thus, contrary to earlier observation, the application did not go abandoned after midnight Monday, 29 September, 2003;

- Petitioner filed the instant papers, including the oath/declaration of Joung Joon Ho, however, it is noted that the signature for the fifth-named inventor, Oh Choong Young, is signed not in that name but rather simply as "Daniel."

Petitioner must clarify that the signature of "Daniel" is that of Oh Choong Young, and this may be done by way of declaration/statement of Oh Choong Young and that this is a correct name/signature and was done without deceptive intent.

Again, it is noted that the instant application is not deemed abandoned.

CONCLUSION

For the foregoing reasons, the instant petition is **dismissed** pending the clarification as to name/signature noted above.

Further correspondence with respect to this matter should be addressed as follows:

By mail: (Effective 1 May, 2003)[1]
Commissioner for Patents
P.O. Box 1450
Alexandria, VA 22313-1450

By FAX: (703) 872-9306 (IFW Formal Filings)
ATTN.: Office of Petitions

[1] To determine the appropriate addresses for other subject-specific correspondence, refer to the USPTO Web site at www.uspto.gov.

By hand: Customer Service Window
Lobby/Room 1B03
Crystal Plaza Two
2011 South Clark Place
Arlington, VA 22202

Telephone inquiries concerning this decision may be directed to the undersigned at (703) 305-9199.

John J. Gillon, Jr.
Senior Attorney
Office of Petitions

UNITED STATES PATENT AND TRADEMARK OFFICE

COMMISSIONER FOR PATENTS
UNITED STATES PATENT AND TRADEMARK OFFICE
P.O. BOX 1450
ALEXANDRIA, VA 22313-1450
www.uspto.gov

JJGJR.: 03-05

Paper No: __

TOWNSEND AND
TOWNSEND AND CREW LLP
TWO EMBARCADERO CENTER, 8TH FLOOR
SAN FRANCISCO CA 94111

COPY MAILED

MAR 0 9 2005

OFFICE OF PETITIONS

In re Application of
Kim, et al. :
Application No. 10/367,591 : ON PETITION
Filed: 13 February, 2003 :
Attorney Docket No. 021524-000900US :

This is a decision on the petition under ¶(a) of 37 C.F.R. §1.47, filed on 15 February, 2005.

The petition is **DISMISSED as moot**.

BACKGROUND

The record indicates:

- the application was filed on 13 February, 2003, without, *inter alia*, a fully executed oath or declaration; and
- on 29 April, 2003, the Office mailed a Notice to File Missing Parts with a reply due absent extension of time on or before Monday, 30 June, 2003;
- petitions filed on 22 January and 27 August, 2004, were dismissed for cause, respectively, on 13 July and 17 September, 2004;
- it now appears that the oath/declaration has been signed by all inventors and the issues as to the signature of "Daniel" has been clarified.

In view of the joinder of the inventors, further consideration under Rule 1.47(a) is not necessary and the petition is considered to be moot. This application does not have any Rule 1.47 status and no such status should appear on the file wrapper. This application need not be returned to this Office for any further consideration under Rule 1.47(a).

CONCLUSION

For the foregoing reasons, the instant petition is **dismissed as moot for joinder**.

This application is being released to OIPE for further processing as necessary before being forwarded for examination in due course.

Telephone inquiries regarding this decision should be directed to the undersigned at (571) 272-3214.

John J. Gillon, Jr.
Senior Attorney
Office of Petitions

UNITED STATES PATENT AND TRADEMARK OFFICE

Commissioner for Patents
United States Patent and Trademark Office
P.O. Box 1450
Alexandria, VA 22313-1450
www.uspto.gov

Patent No. : 7,433,465 B2
Serial No. : 10/367,597
Inventor(s) : Casey et al.
Issued : October 7, 2008
Title : **SYSTEMS AND METHODS FOR PROVIDING APPLICATION SERVICES**
Docket No. : **020366-089600US**

Re: Request for Certificate of Correction

Consideration has been given your request for the issuance of a certificate of correction for the above-identified patent under the provisions of 37 CFR 1.322 and/or 1.323.

A petition under 37 CFR 3.81 must be filed and granted to fulfill your request, to date, there is no petition on record to consider your request.

Furthermore, Assignees' and/ or Co-assignees' names and addresses (assignment data) printed in a patent are based *solely* on information supplied in the appropriate space for identifying the assignment data, i.e., item 3 of the Fee(s) Transmittal Form PTOL-85B. After payment of the issue fee, correction of assignment data submitted on the PTOL-85B can only be done by Certificate of Correction under 37 CFR 1.323, which requires petition under 37 CFR 3.81(b).

A request for a patent to be corrected to state the name of the assignee must:

A. state that the assignment was submitted for recordation as set forth in 37 CFR 3.11 before issuance of the patent;
B. include a request for a certificate of correction under 37 CFR 1.323 along with the fee set forth in 37 CFR 1.20(a); and
C. include the processing fee set forth in 37 CFR 1.17(i).

If the request is granted, Certificates of Correction Branch will be notified that a Certificate of Correction may be issued.
See Manual of Patent Examining Procedure, Section 1481.01 (Rev. 3) (Oct. 2005).

Applicant has not included items B and or C above, accordingly, the request for Certificate of Correction to add or change the assignee data is dismissed.
Any request under 37 CFR 3.81(b) should be directed to the following address or facsimile number:

By mail: Mail Stop PETITIONS
Commissioner for Patents
Post Office Box 1450
Alexandria, VA 22313-1450

By hand: Customer Service Window
Mail Stop Petitions
Randolph Building
401 Dulany Street
Alexandria, VA 22314

By fax: 571-273-8300 ATTN: Office of Petitions

If a fee (currently $100) was previously submitted for consideration of a Request for Certificate of Correction, under CFR 1.323, to correct assignment data, no additional fee is required.

If, the petition under 37 CFR 1.182 (required fee currently $130), is filed and granted, the patentee would be entitled to a certificate of correction under 37 CFR 1.323 (required fee currently $100).

Ernest C. White, ***LIE***
For Mary F. Diggs (703) 308-9390 x 125
Decisions & Certificates
of Correction Branch
(703) **308-9390 x 122**

TOWNSEND AND TOWNSEND AND CREW, LLP
TWO EMBARCADERO CENTER
EIGHTH FLOOR
SAN FRANCISCO CA 94111-3834

ecw

UNITED STATES PATENT AND TRADEMARK OFFICE

Commissioner for Patents
United States Patent and Trademark Office
P.O. Box 1450
Alexandria, VA 22313-1450
www.uspto.gov

TOWNSEND AND TOWNSEND AND CREW, LLP
TWO EMBARCADERO CENTER
EIGHTH FLOOR
SAN FRANCISCO, CA 94111-3834

COPY MAILED
DEC 17 2008

In re Patent No. 7,433,465	:	
Issue Date: October 7, 2008	:	
Application No. 10/367,597	:	ON PETITION
Filed: February 14, 2003	:	
Attorney Docket No. 020366-08900US	:	

This is a decision on the petition filed November 19, 2008, which is being treated as a request under 37 CFR 3.81(b)[1] to correct the name of the assignee on the front page of the above-identified patent by way of a Certificate of Correction.

The request is **GRANTED**.

Telephone inquiries concerning this decision may be directed to Alicia Kelley at (571) 272-6059. Inquiries regarding the issuance of a certificate of correction should be directed to the Certificate of Correction Branch at (571) 272-4200.

The Certificates of Correction Branch will be notified of this decision granting the petition under 37 CFR 3.81(b) and directing issuance of the requested Certificate of Correction.

/SDB/

Sherry D. Brinkley
Petitions Examiner
Office of Petitions

[1] *See* MPEP 1309, subsection II; and Official Gazette of June 22, 2004.

UNITED STATES PATENT AND TRADEMARK OFFICE

Commissioner for Patents
United States Patent and Trademark Office
P.O. Box 1450
Alexandria, VA 22313-1450
www.uspto.gov

LADAS & PARRY
26 WEST 61ST STREET
NEW YORK NY 10023

COPY MAILED

JAN 19 2006

OFFICE OF PETITIONS

ON PETITION

In re Application of :
Peter David Davis :
Application No. 10/367,606 :
Filed: February 14, 2003 :
Attorney Docket No. U 014408-2 :

This is a decision on the petition, filed January 18, 2006, under 37 CFR 1.313(c)(2) to withdraw the above-identified application from issue after payment of the issue fee.

The petition is **GRANTED.**

The above-identified application is withdrawn from issue for consideration of a submission under 37 CFR 1.114 (request for continued examination). See 37 CFR 1.313(c)(2).

Petitioner is advised that the issue fee paid on January 24, 2005, in the above-identified application cannot be refunded. If, however, the above-identified application is again allowed, petitioner may request that it be applied towards the issue fee required by the new Notice of Allowance.[1]

Telephone inquiries should be directed to the undersigned at (571) 272-3208.

The examiner of Technology Center AU 1626 will consider the request for continued examination under 37 CFR 1.114.

Karen Creasy
Petitions Examiner
Office of Petitions
Office of the Deputy Commissioner
for Patent Examination Policy

---

[1] The request to apply the issue fee to the new Notice may be satisfied by completing and returning the new Issue Fee Transmittal Form PTOL-85(b), which includes the following language thereon: "Commissioner for Patents is requested to apply the Issue Fee and Publication Fee (if any) or re-apply any previously paid issue fee to the application identified above." Petitioner is advised that, whether a fee is indicated as being due or not, the Issue Fee Transmittal Form **must** be completed and timely submitted to avoid abandonment. Note the language in bold text on the first page of the Notice of Allowance and Fee(s) Due (PTOL-85).

SPE RESPONSE FOR CERTIFICATE OF CORRECTION

Paper No.:20070723

DATE : July 23, 2007

TO SPE OF : ART UNIT 1624

SUBJECT : Request for Certificate of Correction on Patent No.: 7,105,501

A response is requested with respect to the accompanying request for a certificate of correction.

Please complete this form and return with file, within **7** days to:
Certificates of Correction Branch - PK 3-910
Palm location **7590** - Tel. No. 305-8201

With respect to the change(s) requested, correcting Office and/or Applicant's errors, should the patent read as shown in the certificate of correction? No new matter should be introduced, nor should the scope or meaning of the claims be changed.

Thank You For Your Assistance **Certificates of Correction Branch**

The request for issuing the above-identified correction(s) is hereby:
Note your decision on the appropriate box.

☒ **Approved** **All** changes apply.

☐ **Approved in Part** Specify below which changes **do not** apply.

☐ **Denied** State the reasons for denial below.

Comments:

None

SPE: James O. Wilson **Art Unit** 1624

UNITED STATES PATENT AND TRADEMARK OFFICE

Commissioner for Patents
United States Patent and Trademark Office
P.O. Box 1450
Alexandria, VA 22313-1450
www.uspto.gov

NEIL A. DuCHEZ
RENNER OTTO BOISSELLE & SKLAR LLP
1621 EUCLID AVENUE, 19TH FLOOR
CLEVELAND, OHIO 44115-2191

COPY MAILED
OCT 1 1 2006
OFFICE OF PETITIONS

In re Application of Keith L. Truog et al Application No. 10/367,611 Filed: February 14, 2003 Attorney Docket No. AVERP3433US	DECISION GRANTING PETITION UNDER 37 CFR 1.313(c)(2)

This is a decision on the petition, filed October 10, 2006, under 37 CFR 1.313(c)(2) to withdraw the above-identified application from issue after payment of the issue fee.

The petition is **GRANTED**.

The above-identified application is withdrawn from issue for consideration of a submission under 37 CFR 1.114 (request for continued examination). See 37 CFR 1.313(c)(2).

Petitioner is advised that the issue fee paid on July 20, 2006 in the above-identified application cannot be refunded. If, however, the above-identified application is again allowed, petitioner may request that it be applied towards the issue fee required by the new Notice of Allowance.[1]

Telephone inquiries should be directed to the undersigned at (571) 272-3218.

This matter is being referred to Technology Center AU 1772 for processing of the request for continued examination under 37 CFR 1.114 and for consideration of the Information Disclosure Statement.

Frances Hicks
Petitions Examiner
Office of Petitions

C:\Documents and Settings\FHicks\My Documents\470\Oct10\367611.wpd

---

[1] *The request to apply the issue fee to the new Notice may be satisfied by completing and returning the new Part B – Fee(s) Transmittal Form (along with any balance due at the time of submission). Petitioner is advised that the Issue Fee Transmittal Form must be completed and timely submitted to avoid abandonment.*

UNITED STATES PATENT AND TRADEMARK OFFICE

COMMISSIONER FOR PATENTS
UNITED STATES PATENT AND TRADEMARK OFFICE
P.O. BOX 1450
ALEXANDRIA, VA 22313-1450
WWW.USPTO.GOV

Paper No. 5

KONNEKER SMITH
660 NORTH CENTRAL EXPRESSWAY
SUITE 230
PLANO TX 75074

COPY MAILED

JUL 3 1 2003

OFFICE OF PETITIONS

In re Application of	:
Gano, Freeman, Bowling & Longbottom	:
Application No. 10/367,619	: DECISION ACCORDING STATUS
Filed: February 14, 2003	: UNDER 37 CFR 1.47(a)
Attorney Docket No. 970194U1D1R1USA	:
For: EXPANDABLE WELLBORE JUNCTION	:

This is in response to the petition under 37 CFR 1.47(a), filed June 6, 2003 (certificate of mailing date June 4, 2003).

The petition is granted.

Petitioners have shown that the non-signing inventor, James R. Longbottom, has refused to join in the filing of the above-identified application after having been presented with the application papers. Specifically, the exhibits and declaration/statement of facts of Attorney Marlin R. Smith establish that the inventor was mailed the application papers, including the specification, claims and drawings, but failed to respond to the request that he sign the declaration. Petitioners have submitted a declaration in compliance with 37 CFR 1.63 and 1.64.

This application and papers have been reviewed and found in compliance with 37 CFR 1.47(a). This application is hereby accorded Rule 1.47(a) status.

As provided in Rule 1.47(c), this Office will forward notice of this application's filing to the non-signing inventor at the address given in the petition. Notice of the filing of this application will also be published in the Official Gazette.

After this decision is mailed, the above-identified application will be forwarded to the Office of Initial Patent Examination for further processing.

Telephone inquiries should be directed to the undersigned at (703) 308-6712.

E. Shirene Willis

E. Shirene Willis
Senior Petitions Attorney
Office of Petitions

UNITED STATES PATENT AND TRADEMARK OFFICE

COMMISSIONER FOR PATENTS
UNITED STATES PATENT AND TRADEMARK OFFICE
P.O. BOX 1450
ALEXANDRIA, VA 22313-1450
WWW.USPTO.GOV

JAMES R. LONGBOTTOM
P.O. BOX 1115
MAGNOLIA TX 77353

In re Application of Gano, Freeman, Bowling & Longbottom Application No. 10/367,619 Filed: February 14, 2003 Attorney Docket No. 970194U1D1R1USA For: EXPANDABLE WELLBORE JUNCTION	LETTER	COPY MAILED JUL 3 1 2003 OFFICE OF PETITIONS

Dear Mr. Longbottom:

You are named as a joint inventor in the above identified United States patent application, filed under the provisions of 35 U.S.C. 116 (United States Code), and 37 CFR 1.47(a), Rules of Practice in Patent Cases. Should a patent be granted on the application you will be designated therein as a joint inventor.

As a named inventor you are entitled to inspect any paper in the file wrapper of the application, order copies of all or any part thereof (at a prepaid cost per 37 CFR 1.19) or make your position of record in the application. Alternatively, you may arrange to do any of the preceding through a registered patent attorney or agent presenting written authorization from you. If you care to join the application, counsel of record (see below) would presumably assist you. Joining in the application would entail the filing of an appropriate oath or declaration by you pursuant to 37 CFR 1.63.

Requests for information regarding your application should be directed to the File Information Unit at (703)308-2733. Information regarding how to pay for and order a copy of the application, or a specific paper in the application, should be directed to Certification Division at (703)308-9726 or 1(800)972-6382 (outside the Washington D.C. area).

Telephone inquiries regarding this communication should be directed to the undersigned at (703) 308-6712.

E. Shirene Willis

E. Shirene Willis
Senior Petitions Attorney
Office of Petitions

ATTORNEY OF RECORD: KONNEKER SMITH
660 NORTH CENTRAL EXPRESSWAY
SUITE 230
PLANO TX 75074

UNITED STATES PATENT AND TRADEMARK OFFICE

UNDER SECRETARY OF COMMERCE FOR INTELLECTUAL PROPERTY AND
DIRECTOR OF THE UNITED STATES PATENT AND TRADEMARK OFFICE
WASHINGTON, DC 20231
www.uspto.gov

MAILED
FROM DIRECTORS OFFICE

DEC 0 3 2004

TECHNOLOGY CENTER 3600

Townsend and Townsend and Crew, LLP
Two Embarcadero Center
Eighth Floor
San Francisco, CA 94111-3834

In re application of
Larry K. Lam
Application No. 10/367,621
Filed: February 14, 2003
For: METHOD AND SYSTEM FOR MUTUAL COHERENT SYNTHETIC APERTURE RADIOMETRY

: DECISION ON REQUEST
: FOR WITHDRAWAL OF
: ATTORNEY

This is a decision on the request filed on March 18, 2004, under 37 CFR 1.36 and MPEP 402.06, requesting permission to withdraw as the attorney of record in the above-identified application.

The request is **NOT APPROVED as MOOT**.

Under 37 CFR 1.36 an attorney may withdraw only upon application to and approval by the Commissioner. It should be noted that a withdrawal is effective when approved, not when filed. Besides giving due notice to his or her client and delivering to the client all papers and property to which the client is entitled as specified under 37 CFR 10.40, approval of such a request requires that the following conditions be met:

A) Each attorney of record must sign the notice of withdrawal, or the notice must contain a clear indication of one attorney signing on behalf of another, because the Office does not recognize law firms;

B) A proper reason for the withdrawal as enumerated in 37 CFR 10.40(b) or subsection (1)-(6) of 37 CFR 10.40(c) must be provided; and

C) If withdrawal is requested in accordance with 37 CFR 10.40(c) above, there must be at least 30 days between approval of the withdrawal and the later of the expiration date of a time period for reply or the expiration date of the period which can be obtained by a petition and fee for extension of time under 37 CFR 1.136(a).

The request to withdraw as attorney in the above-identified application is not approved as moot because the power of attorney has already been withdrawn as per the Notice to that effect of June 8, 2004.

Kenneth J. Dorner
Special Programs Examiner
Patent Technology Center 3600
(703) 308-0866
Facsimile No.: (703) 605-0586

KJD/slb: 11/29/04

cc: MCDERMOTT, WILL, & EMERY
18191 VON KARMAN AVENUE., SUITE 400
IRVINE, CA 92612-0187

UNITED STATES PATENT AND TRADEMARK OFFICE

Commissioner for Patents
United States Patent and Trademark Office
P.O. Box 1450
Alexandria, VA 22313-1450
www.uspto.gov

COPY MAILED

AUG 0 4 2008

OFFICE OF PETITIONS

WEINGARTEN, SCHURGIN, GAGNEBIN & LEBOVICI LLP
TEN POST OFFICE SQUARE
BOSTON MA 02109

In re Application of	:	
Daniel J. Teven et al	:	
Application No. 10/367,640	:	ON PETITION
Filed: February 14, 2003	:	
Attorney Docket No. APM-002XX	:	

This is a decision on the petition under 37 CFR 1.182, filed November 30, 2007, to change the order of the names of the inventors.

The petition is **Granted**.

A corrected Filing Receipt with the desired order of the names of the inventors accompanies this decision on petition.

Telephone inquiries regarding the above matter should be directed to the undersigned at (571)272-3208.

This application is being referred to Technology Center AU 2157.

Karen Creasy

Karen Creasy
Petitions Examiner
Office of Petitions

ATTACHMENT: CORRECTED FILING RECEIPT

UNITED STATES PATENT AND TRADEMARK OFFICE

UNITED STATES DEPARTMENT OF COMMERCE
United States Patent and Trademark Office
Address: COMMISSIONER FOR PATENTS
P.O. Box 1450
Alexandria, Virginia 22313-1450
www.uspto.gov

APPLICATION NUMBER	FILING or 371(c) DATE	GRP ART UNIT	FIL FEE REC'D	ATTY.DOCKET.NO	TOT CLAIMS	IND CLAIMS
10/367,640	02/14/2003	2157	440	APM-002XX	13	2

CONFIRMATION NO. 2176

CORRECTED FILING RECEIPT

207
WEINGARTEN, SCHURGIN, GAGNEBIN & LEBOVICI LLP
TEN POST OFFICE SQUARE
BOSTON, MA 02109

OC000000031347442

Date Mailed: 08/01/2008

Receipt is acknowledged of this non-provisional patent application. The application will be taken up for examination in due course. Applicant will be notified as to the results of the examination. Any correspondence concerning the application must include the following identification information: the U.S. APPLICATION NUMBER, FILING DATE, NAME OF APPLICANT, and TITLE OF INVENTION. Fees transmitted by check or draft are subject to collection. Please verify the accuracy of the data presented on this receipt. **If an error is noted on this Filing Receipt, please submit a written request for a Filing Receipt Correction. Please provide a copy of this Filing Receipt with the changes noted thereon. If you received a "Notice to File Missing Parts" for this application, please submit any corrections to this Filing Receipt with your reply to the Notice. When the USPTO processes the reply to the Notice, the USPTO will generate another Filing Receipt incorporating the requested corrections**

Applicant(s)

Daniel J. Teven, Sharon, MA;
Tonytip Ketudat, Lexington, MA;
Christopher F. Herot, Newton Highlands, MA;
Charles J. Digate, Winchester, MA;
Alexis M. Kopikis, Brighton, MA;

Power of Attorney:

Stanley Schurgin--20979
Charles Gagnebin III--25467
Victor Lebovici--30864
Beverly Hjorth--32033
Holliday Heine--34346
James Thompson--36699
David Dagg--37809
Gordon Moriarty--38973

Domestic Priority data as claimed by applicant

Foreign Applications

If Required, Foreign Filing License Granted: 03/31/2003

The country code and number of your priority application, to be used for filing abroad under the Paris Convention, is **US 10/367,640**

Projected Publication Date: Not Applicable

Non-Publication Request: No

Early Publication Request: No
**** SMALL ENTITY ****

Title

System and method for immediate and delayed real-time communication activities using availability data from and communications through an external instant messaging system

Preliminary Class

709

PROTECTING YOUR INVENTION OUTSIDE THE UNITED STATES

Since the rights granted by a U.S. patent extend only throughout the territory of the United States and have no effect in a foreign country, an inventor who wishes patent protection in another country must apply for a patent in a specific country or in regional patent offices. Applicants may wish to consider the filing of an international application under the Patent Cooperation Treaty (PCT). An international (PCT) application generally has the same effect as a regular national patent application in each PCT-member country. The PCT process **simplifies** the filing of patent applications on the same invention in member countries, but **does not result** in a grant of "an international patent" and does not eliminate the need of applicants to file additional documents and fees in countries where patent protection is desired.

Almost every country has its own patent law, and a person desiring a patent in a particular country must make an application for patent in that country in accordance with its particular laws. Since the laws of many countries differ in various respects from the patent law of the United States, applicants are advised to seek guidance from specific foreign countries to ensure that patent rights are not lost prematurely.

Applicants also are advised that in the case of inventions made in the United States, the Director of the USPTO must issue a license before applicants can apply for a patent in a foreign country. The filing of a U.S. patent application serves as a request for a foreign filing license. The application's filing receipt contains further information and guidance as to the status of applicant's license for foreign filing.

Applicants may wish to consult the USPTO booklet, "General Information Concerning Patents" (specifically, the section entitled "Treaties and Foreign Patents") for more information on timeframes and deadlines for filing foreign patent applications. The guide is available either by contacting the USPTO Contact Center at 800-786-9199, or it can be viewed on the USPTO website at http://www.uspto.gov/web/offices/pac/doc/general/index.html.

For information on preventing theft of your intellectual property (patents, trademarks and copyrights), you may wish to consult the U.S. Government website, http://www.stopfakes.gov. Part of a Department of Commerce initiative, this website includes self-help "toolkits" giving innovators guidance on how to protect intellectual property in specific countries such as China, Korea and Mexico. For questions regarding patent enforcement issues, applicants may call the U.S. Government hotline at 1-866-999-HALT (1-866-999-4158).

LICENSE FOR FOREIGN FILING UNDER

Title 35, United States Code, Section 184

Title 37, Code of Federal Regulations, 5.11 & 5.15

GRANTED

The applicant has been granted a license under 35 U.S.C. 184, if the phrase "IF REQUIRED, FOREIGN FILING LICENSE GRANTED" followed by a date appears on this form. Such licenses are issued in all applications where

the conditions for issuance of a license have been met, regardless of whether or not a license may be required as set forth in 37 CFR 5.15. The scope and limitations of this license are set forth in 37 CFR 5.15(a) unless an earlier license has been issued under 37 CFR 5.15(b). The license is subject to revocation upon written notification. The date indicated is the effective date of the license, unless an earlier license of similar scope has been granted under 37 CFR 5.13 or 5.14.

This license is to be retained by the licensee and may be used at any time on or after the effective date thereof unless it is revoked. This license is automatically transferred to any related applications(s) filed under 37 CFR 1.53(d). This license is not retroactive.

The grant of a license does not in any way lessen the responsibility of a licensee for the security of the subject matter as imposed by any Government contract or the provisions of existing laws relating to espionage and the national security or the export of technical data. Licensees should apprise themselves of current regulations especially with respect to certain countries, of other agencies, particularly the Office of Defense Trade Controls, Department of State (with respect to Arms, Munitions and Implements of War (22 CFR 121-128)); the Bureau of Industry and Security, Department of Commerce (15 CFR parts 730-774); the Office of Foreign AssetsControl, Department of Treasury (31 CFR Parts 500+) and the Department of Energy.

NOT GRANTED

No license under 35 U.S.C. 184 has been granted at this time, if the phrase "IF REQUIRED, FOREIGN FILING LICENSE GRANTED" DOES NOT appear on this form. Applicant may still petition for a license under 37 CFR 5.12, if a license is desired before the expiration of 6 months from the filing date of the application. If 6 months has lapsed from the filing date of this application and the licensee has not received any indication of a secrecy order under 35 U.S.C. 181, the licensee may foreign file the application pursuant to 37 CFR 5.15(b).

UNITED STATES PATENT AND TRADEMARK OFFICE

Commissioner for Patents
United States Patent and Trademark Office
P.O. Box 1450
Alexandria, VA 22313-1450
www.uspto.gov

FOLEY HOAG, LLP
PATENT GROUP, WORLD TRADE CENTER WEST
155 SEAPORT BLVD.
BOSTON, MA 02110

COPY MAILED

NOV 23 2005

OFFICE OF PETITIONS

In re Application of	:	
Dowling, Jr. et al.	:	DECISIONS ON PETITION
Application No. 10/367,642	:	UNDER 37 CFR 1.78(a)(3)
Filed: February 14, 2003	:	AND 1.78(a)(6)
Attorney Docket No. CKB-114.01	:	

This is a decision on the petition filed August 1, 2005, which is being treated a petition under 37 CFR 1.78(a)(3) and 1.78(a)(6) to accept an unintentionally delayed claim under 35 U.S.C. §§ 120 and 119(e) for the benefit of the prior-filed nonprovisional Application No. 09/924,119, filed August 7, 2001, and the prior-filed provisional Application No. 60/223,491, filed August 7, 2000, set forth in the concurrently filed amendment.

The petition is **dismissed**.

A petition for acceptance of a claim for late priority under 37 CFR 1.78(a)(3) and 1.78(a)(6) is only applicable to those applications filed on or after November 29, 2000. Further, the petition is appropriate only after the expiration of the period specified in 37 CFR 1.78(a)(2)(ii) and 1.78(a)(5)(ii). In addition, a petition under 37 CFR 1.78(a)(3) and 1.78(a)(6) must be accompanied by:

(1) the reference required by 35 U.S.C. §§ 120 and 119(e) and 37 CFR 1.78(a)(2)(i) and 1.78(a)(5)(i) of the prior-filed applications, unless previously submitted;
(2) the surcharge set forth in § 1.17(t); and

(3) a statement that the entire delay between the date the claim was due under 37 CFR 1.78(a)(2)(ii) and 1.78(a)(5)(ii) and the date the claim was filed was unintentional. The Director may require additional where there is a question whether the delay was unintentional.

The petition fails to comply with item (1) above.

The concurrently filed amendment to add the prior-filed applications on page one following the first sentence of the specification is not acceptable as drafted since it improperly incorporates by reference the prior-filed provisional Applications, Nos. 60/071,281, 60/068,792, 60/078,861, 60/079,285 and 60/090,920. Petitioner's attention is directed to Dart Industries v. Banner, 636 F.2d 684, 207 USPQ 273 (C.A.D.C. 1980), where the court drew a distinction between a permissible 35 U.S.C. § 120 statement and the impermissible introduction of new matter by way of incorporation by reference in a 35 U.S.C. § 120 statement. The court specifically stated:

> Section 120 merely provides a mechanism whereby an application becomes entitled to benefit of the filing date of an earlier application disclosing the same subject matter. Common subject matter must be disclosed, in both applications, either specifically or by an express incorporation-by-reference of prior disclosed subject matter. Nothing in section 120 itself operates to carry forward any disclosure from an earlier application. In re deSeversky, supra at 674, 177 USPQ at 146-147. Section 120 contains no magical disclosure-augmenting powers able to pierce new matter barriers. It cannot, therefore, "limit" the absolute and express prohibition against new matter contained in section 251.

In order for the incorporation by reference statement to be effective as a proper safeguard against the omission of a portion of a prior application, the incorporation by reference statement must be included in the specification-as-filed, or in an amendment specifically referred to in an oath or declaration executing the application. *See* In re deSeversky, *supra*. *Note also* MPEP 201.06(c).

Furthermore, after reviewing the "Related U.S. Application Data" for U.S. Patent No. 6,548,967 (Application No. 09/663,969, filed September 19, 2000), there is a missing link in the chain of applications between Applications, Nos. 09/663,969 and 09/213,537. It appears that prior-filed Application No. 09/663,969 did not claim the benefit of provisional Applications, Nos. 60/071,281, 60/068,792, 60/078,861, 60/079,285 and 60/090,920.

In view of the above, petitioner must perfect the priority claim as a condition for acceptance of the instant petition under 37 CFR 1.78(a)(3) and (a)(6). Therefore, petitioner must submit a completed Certificate of Correction (with the $100.00 fee) in Application No. 09/663,969,[1] to claim the benefit of provisional Applications, Nos. 60/071,281, 60/068,792, 60/078,861, 60/079,285 and 60/090,920.

Petitioner must submit a renewed petition under 37 CFR 1.78(a)(3) and (a)(6), accompanied by an application data sheet or a substitute amendment,[2] deleting the incorporation by reference statement. Additionally, petitioner must submit a copy of the completed Certificate of Correction to demonstrate that petitioner perfected the priority claim.

Further correspondence with respect to this matter should be addressed as follows:

By mail: Mail Stop PETITIONS
Commissioner for Patents
Post Office Box 1450
Alexandria, VA 22313-1450

By hand: Customer Service Window
Mail Stop Petitions
Randolph Building
401 Dulany Street
Alexandria, VA 22314

By fax: (571) 273-8300
ATTN: Office of Petitions

---

[1] The provisions of 37 CFR 1.78(a)(6) for accepting a late claim for priority do not apply to applications filed prior to November 29, 2000.

[2] Note 37 CFR 1.121

Any questions concerning this matter may be directed to Senior Petitions Attorney Christina Tartera Donnell at (571) 272-3211.

Frances Hicks
Lead Paralegal
Office of Petitions
Office of the Deputy Commissioner
for Patent Examination Policy

UNITED STATES PATENT AND TRADEMARK OFFICE

COMMISSIONER FOR PATENTS
UNITED STATES PATENT AND TRADEMARK OFFICE
P.O. BOX 1450
ALEXANDRIA, VA 22313-1450
www.uspto.gov

WOLF GREENFIELD & SACKS, PC
FEDERAL RESERVE PLAZA
600 ATLANTIC AVENUE
BOSTON MA 02210-2206

COPY MAILED
AUG 0 9 2006
OFFICE OF PETITIONS

In re Application of	:	
Dowling, Jr. et al.	:	DECISIONS ON PETITION
Application No. 10/367,642	:	UNDER 37 CFR 1.78(a)(3)
Filed: February 14, 2003	:	AND 1.78(a)(6)
Attorney Docket No. CKB-114.01	:	

This is a decision on the renewed petition filed April 3, 2006, which is being treated a petition under 37 CFR 1.78(a)(3) and 1.78(a)(6) to accept an unintentionally delayed claim under 35 U.S.C. §§ 120 and 119(e) for the benefit of the prior-filed nonprovisional and provisional applications, as set forth in the concurrently filed amendment.

The petition is **granted**.

A petition for acceptance of a claim for late priority under 37 CFR 1.78(a)(3) and 1.78(a)(6) is only applicable to those applications filed on or after November 29, 2000. Further, the petition is appropriate only after the expiration of the period specified in 37 CFR 1.78(a)(2)(ii) and 1.78(a)(5)(ii). In addition, a petition under 37 CFR 1.78(a)(3) and 1.78(a)(6) must be accompanied by:

(1) the reference required by 35 U.S.C. §§ 120 and 119(e) and 37 CFR 1.78(a)(2)(i) and 1.78(a)(5)(i) of the prior-filed applications, unless previously submitted;
(2) the surcharge set forth in § 1.17(t); and

(3) a statement that the entire delay between the date the claim was due under 37 CFR 1.78(a)(2)(ii) and 1.78(a)(5)(ii) and the date the claim was filed was unintentional. The Director may require additional where there is a question whether the delay was unintentional.

The instant pending nonprovisional application was filed after November 29, 2000, and the claim herein for the benefit of priority to the prior-filed applications is submitted after expiration of the period specified in 37 CFR 1.78(a)(2)(ii) and 1.78(a)(5)(ii). Therefore, this is a proper petition under 37 CFR 1.78(a)(3) and 1.78(a)(6).

The petition complies with the requirements for a grantable petition under 37 CFR 1.78(a)(3) and 1.78(a)(6) in that (1) a reference to the prior-filed applications has been included in an amendment to the first sentence of the specification following the title as provided by 37 CFR 1.78(a)(2)(iii) and 1.78(a)(5)(iii); (2) the surcharge fee required by 37 CFR 1.17(t) has been submitted; and (3) the petition contains an adequate statement of unintentional delay.[1] Accordingly, having found that the instant petition for acceptance of an unintentionally delayed claim for the benefit of priority under 35 U.S.C. §§ 120 and 119(e) to the prior-filed applications satisfies the conditions of 37 CFR 1.78(a)(3) and 1.78(a)(6), the petition is granted.

The granting of the petition to accept the delayed benefit claim to the prior-filed applications under 37 CFR 1.78(a)(3) and 1.78(a)(6) should <u>not</u> be construed as meaning that the instant application is entitled to the benefit of the filing date of the prior-filed

---

[1] 37 CFR 1.78(a)(3) and 1.78(a)(6) require a statement that the entire delay between the date the claim was due under 37 CFR 1.78(a)(2)(ii) and 1.78(a)(5)(ii) and the date the claim was filed was unintentional. In the instant petition, petitioners stated that "the entire delay between the date required for claim to benefit of the filing date of Serial No. 09/264,937, now U.S. 6,469,104 under 37 C.F.R. Section 1.78(a)(2) until the filing of a grantable petition under 37 C.F.R. Section 1.78(a)(3) was unintentional." The statement contained in the instant petition varies from the language required by 37 CFR 1.78(a)(3) and (a)(6); however, the statement is being construed as "the entire delay between the date the claim under 35 U.S.C. §§ 120 and 119(e) for the benefit of the prior-filed applications, Nos. 09/264,937 and 60/276,588, was due under 37 CFR 1.78(a)(2)(ii) and 1.78(a)(5)(ii) and the date the claim was filed was unintentional." If this is <u>not</u> a correct interpretation of the statement, petitioners must notify the Office of Petitions immediately.

applications. In order for the instant application to be entitled to the benefit of the prior-filed applications, all other requirements under 35 U.S.C. § 120 and 1.78(a)(1) and (a)(2) and under 35 U.S.C. § 119(e) and 37 CFR 1.78(a)(4) and (a)(5) must be met. Similarly, the fact that the corrected Filing Receipt accompanying this decision on petition includes the prior-filed applications should not be construed as meaning that applicant is entitled to the claim for benefit of priority to the prior-filed applications noted thereon. Accordingly, the examiner will, in due course, consider this benefit claim and determine whether the instant application is entitled to the benefit of the earlier filing date.

A corrected Filing Receipt, which includes the priority claim to the prior-filed applications, accompanies this decision on petition.

Any questions concerning this matter may be directed to Senior Petitions Attorney Christina Tartera Donnell at (571) 272-3211. All other inquiries concerning either the examination procedures or status of the application should be directed to the Technology Center.

This matter is being referred to Technology Center Art Unit 2821 for appropriate action on the amendment filed April 3, 2006, including consideration by the examiner of the claim for the benefit of the prior-filed applications.

Frances Hicks

Frances Hicks
Lead Paralegal
Office of Petitions

ATTACHMENT: Corrected Filing Receipt

UNITED STATES PATENT AND TRADEMARK OFFICE

UNITED STATES DEPARTMENT OF COMMERCE
United States Patent and Trademark Office
Address: COMMISSIONER FOR PATENTS
P.O. Box 1450
Alexandria, Virginia 22313-1450
www.uspto.gov

APPL NO.	FILING OR 371 (c) DATE	ART UNIT	FIL FEE REC'D	ATTY.DOCKET NO	DRAWINGS	TOT CLMS	IND CLMS
10/367,642	02/14/2003	2821	3456	C1104.70114US00	9	101	5

CONFIRMATION NO. 3008

CORRECTED FILING RECEIPT

OC000000019943825

23628
WOLF GREENFIELD & SACKS, PC
FEDERAL RESERVE PLAZA
600 ATLANTIC AVENUE
BOSTON, MA 02210-2206

Date Mailed: 08/08/2006

Receipt is acknowledged of this regular Patent Application. It will be considered in its order and you will be notified as to the results of the examination. Be sure to provide the U.S. APPLICATION NUMBER, FILING DATE, NAME OF APPLICANT, and TITLE OF INVENTION when inquiring about this application. Fees transmitted by check or draft are subject to collection. Please verify the accuracy of the data presented on this receipt. **If an error is noted on this Filing Receipt, please mail to the Commissioner for Patents P.O. Box 1450 Alexandria Va 22313-1450. Please provide a copy of this Filing Receipt with the changes noted thereon. If you received a "Notice to File Missing Parts" for this application, please submit any corrections to this Filing Receipt with your reply to the Notice. When the USPTO processes the reply to the Notice, the USPTO will generate another Filing Receipt incorporating the requested corrections (if appropriate).**

Applicant(s)

Kevin J. Dowling JR., Westford, MA;
Frederick M. Morgan, Quincy, MA;
Ihor A. Lys, Milton, MA;
Michael K. Blackwell, Milton, MA;

Assignment For Published Patent Application

Color Kinetics, Inc., Boston, MA

Power of Attorney: The patent practitioners associated with Customer Number **23628**.

Domestic Priority data as claimed by applicant

This application is a CON of 09/663,969 09/19/2000 PAT 6,548,967
which is a CIP of 09/425,770 10/22/1999 PAT 6,150,774
which is a CON of 08/920,156 08/26/1997 PAT 6,016,038
and said 09/663,969 09/19/2000
is a CIP of 09/215,624 12/17/1998 PAT 6,528,954
and is a CIP of 09/213,537 12/17/1998 PAT 6,292,901
and is a CIP of 09/213,607 12/17/1998 ABN
and is a CIP of 09/213,189 12/17/1998 PAT 6,459,919
and is a CIP of 09/213,548 12/17/1998 PAT 6,166,496
and is a CIP of 09/213,581 12/17/1998 PAT 7,038,398
and is a CIP of 09/213,659 12/17/1998 PAT 6,211,626
and is a CIP of 09/213,540 12/17/1998 PAT 6,720,745
and is a CIP of 09/333,739 06/15/1999
This application 10/367,642
is a CIP of 09/669,121 09/25/2000 PAT 6,806,659

and is a CIP of 09/971,367 10/04/2001 PAT 6,788,011
and is a CIP of 09/924,119 08/07/2001 ABN
which claims benefit of 60/223,491 08/07/2000
and said 09/215,624 12/17/1998
claims benefit of 60/071,281 12/17/1997
and claims benefit of 60/068,792 12/24/1997
and claims benefit of 60/078,861 03/20/1998
and claims benefit of 60/079,285 03/25/1998
and claims benefit of 60/090,920 06/26/1998

Foreign Applications

If Required, Foreign Filing License Granted: 04/29/2003

The country code and number of your priority application, to be used for filing abroad under the Paris Convention, is US10/367,642

Projected Publication Date: Not Applicable

Non-Publication Request: No

Early Publication Request: No

Title

Universal lighting network methods and systems

Preliminary Class

315

PROTECTING YOUR INVENTION OUTSIDE THE UNITED STATES

Since the rights granted by a U.S. patent extend only throughout the territory of the United States and have no effect in a foreign country, an inventor who wishes patent protection in another country must apply for a patent in a specific country or in regional patent offices. Applicants may wish to consider the filing of an international application under the Patent Cooperation Treaty (PCT). An international (PCT) application generally has the same effect as a regular national patent application in each PCT-member country. The PCT process **simplifies** the filing of patent applications on the same invention in member countries, but **does not result** in a grant of "an international patent" and does not eliminate the need of applicants to file additional documents and fees in countries where patent protection is desired.

Almost every country has its own patent law, and a person desiring a patent in a particular country must make an application for patent in that country in accordance with its particular laws. Since the laws of many countries differ in various respects from the patent law of the United States, applicants are advised to seek guidance from specific foreign countries to ensure that patent rights are not lost prematurely.

Applicants also are advised that in the case of inventions made in the United States, the Director of the USPTO must issue a license before applicants can apply for a patent in a foreign country. The filing of a U.S. patent application serves as a request for a foreign filing license. The application's filing receipt contains further information and guidance as to the status of applicant's license for foreign filing.

Applicants may wish to consult the USPTO booklet, "General Information Concerning Patents" (specifically, the section entitled "Treaties and Foreign Patents") for more information on timeframes and deadlines for filing foreign patent applications. The guide is available either by contacting the USPTO Contact Center at 800-786-9199, or it can be viewed on the USPTO website at http://www.uspto.gov/web/offices/pac/doc/general/index.html.

For information on preventing theft of your intellectual property (patents, trademarks and copyrights), you may wish to consult the U.S. Government website, http://www.stopfakes.gov. Part of a Department of Commerce initiative, this website includes self-help "toolkits" giving innovators guidance on how to protect intellectual property in specific countries such as China, Korea and Mexico. For questions regarding patent enforcement issues, applicants may call the U.S. Government hotline at 1-866-999-HALT (1-866-999-4158).

LICENSE FOR FOREIGN FILING UNDER
Title 35, United States Code, Section 184
Title 37, Code of Federal Regulations, 5.11 & 5.15

GRANTED

The applicant has been granted a license under 35 U.S.C. 184, if the phrase "IF REQUIRED, FOREIGN FILING LICENSE GRANTED" followed by a date appears on this form. Such licenses are issued in all applications where the conditions for issuance of a license have been met, regardless of whether or not a license may be required as set forth in 37 CFR 5.15. The scope and limitations of this license are set forth in 37 CFR 5.15(a) unless an earlier license has been issued under 37 CFR 5.15(b). The license is subject to revocation upon written notification. The date indicated is the effective date of the license, unless an earlier license of similar scope has been granted under 37 CFR 5.13 or 5.14.

This license is to be retained by the licensee and may be used at any time on or after the effective date thereof unless it is revoked. This license is automatically transferred to any related applications(s) filed under 37 CFR 1.53(d). This license is not retroactive.

The grant of a license does not in any way lessen the responsibility of a licensee for the security of the subject matter as imposed by any Government contract or the provisions of existing laws relating to espionage and the national security or the export of technical data. Licensees should apprise themselves of current regulations especially with respect to certain countries, of other agencies, particularly the Office of Defense Trade Controls, Department of State (with respect to Arms, Munitions and Implements of War (22 CFR 121-128)); the Bureau of Industry and Security, Department of Commerce (15 CFR parts 730-774); the Office of Foreign Assets Control, Department of Treasury (31 CFR Parts 500+) and the Department of Energy.

NOT GRANTED

No license under 35 U.S.C. 184 has been granted at this time, if the phrase "IF REQUIRED, FOREIGN FILING LICENSE GRANTED" DOES NOT appear on this form. Applicant may still petition for a license under 37 CFR 5.12, if a license is desired before the expiration of 6 months from the filing date of the application. If 6 months has lapsed from the filing date of this application and the licensee has not received any indication of a secrecy order under 35 U.S.C. 181, the licensee may foreign file the application pursuant to 37 CFR 5.15(b).

UNITED STATES PATENT AND TRADEMARK OFFICE

Commissioner for Patents
United States Patent and Trademark Office
P.O. Box 1450
Alexandria, VA 22313-1450
www.uspto.gov

STEPTOE & JOHNSON, LLP
2121 AVENUE OF THE STARS
SUITE 2800
LOS ANGELES CA 90067

COPY MAILED
OCT 0 2 2008
OFFICE OF PETITIONS

In re Application of :
Cardno, et al. :
Application No. 10/367,643 : DECISION
Filed: 14 February, 2003 :
Attorney Docket No. 83336.1716 :

This is a decision on the petition, filed on 8 August, 2008, considered as a petition under 37 C.F.R. §1.137(b) to revive the application as having been abandoned due to unintentional delay.

The petition under 37 C.F.R. §1.137(b) is **GRANTED**.

As to Allegations of
Unintentional Delay

The requirements of a grantable petition pursuant to 37 C.F.R. §1.137(b) are the petition and fee therefor, a reply, a proper statement of unintentional delay under the regulation, and, where applicable, a terminal disclaimer and fee. (However, it does not appear that a terminal disclaimer and fee are due here.)

BACKGROUND

The record reflects as follows:

Petitioner failed to reply timely and properly to the non-final Office action mailed on 15 November, 2007, with reply due absent extension of time on or before 15 February, 2008.

The application went abandoned by operation of law after midnight 15 February, 2008.

The Office mailed the Notice of Abandonment on 27 June, 2008.

On 8 August, 2008, Petitioner filed the instant petition with fee, a reply in the form of an amendment and made the statement of unintentional delay.

Out of an abundance of caution, Petitioners always are reminded that those registered to practice and all others who make representations before the Office are reminded to inquire into the underlying facts of representations made to the Office and support averments with the appropriate documentation–since all owe to the Office the continuing duty to disclose.[1]

The availability of applications and application papers online to applicants/practitioners who diligently associate their Customer Number with the respective application(s) now provides an applicant/practitioner on-demand information as to events/transactions in an application.

As to Allegations of
Unintentional Delay

The requirements under 37 C.F.R. §1.137(b) have been satisfied.

CONCLUSION

Accordingly, The petition under 37 C.F.R. §1.137(b) is **granted**.

The instant application is released to Technology Center/AU 2154 for further processing in due course.

Petitioner may find it beneficial to view Private PAIR within a fortnight of the instant decision to ensure that the revival has been acknowledged by the Technology Center/AU in response to this decision. It is noted that all inquiries with regard to that change in status need be directed to the Technology Center/AU where that change of status must be effected—that does not occur in the Office of Petitions.

[1] See supplement of 17 June, 1999. The Patent and Trademark Office is relying on Petitioner's duty of candor and good faith and accepting a statement made by Petitioner. See Changes to Patent Practice and Procedure, 62 Fed. Reg. at 53160 and 53178, 1203 Off. Gaz. Pat. Office at 88 and 103 (responses to comments 64 and 109)(applicant obligated under 37 C.F.R. §10.18 to inquire into the underlying facts and circumstances when providing statements to the Patent and Trademark Office).

While telephone inquiries regarding this decision may be directed to the undersigned at (571) 272-3214, it is noted that all practice before the Office is in writing (see: 37 C.F.R. §1.2[2]) and the proper authority for action on any matter in this regard are the statutes (35 U.S.C.), regulations (37 C.F.R.) and the commentary on policy (MPEP). Therefore, no telephone discussion may be controlling or considered authority for Petitioner's action(s).

/John J. Gillon, Jr./
John J. Gillon, Jr.
Senior Attorney
Office of Petitions

---

[2] The regulations at 37 C.F.R. §1.2 provide:

§1.2 Business to be transacted in writing.

All business with the Patent and Trademark Office should be transacted in writing. The personal attendance of applicants or their attorneys or agents at the Patent and Trademark Office is unnecessary. The action of the Patent and Trademark Office will be based exclusively on the written record in the Office. No attention will be paid to any alleged oral promise, stipulation, or understanding in relation to which there is disagreement or doubt.

SPE: F. Mathew

SPE RESPONSE FOR CERTIFICATE OF CORRECTION

Paper No.: _____

DATE : 4/24/07

TO SPE OF : ART UNIT 3764

SUBJECT : Request for Certificate of Correction for Appl. No.: 10/367,649 Patent No.: 7153244

Please respond to this request for a certificate of correction within 7 days.

Please review the requested changes/corrections as shown in the **COCIN** document(s) in the IFW application image. No new matter should be introduced, nor should the scope or meaning of the claims be changed.

Please complete the response (see below) and forward the completed response to scanning using document code **COCX**.

Lamonte M. Newsome
Certificates of Correction Branch
703-308-9390 ext. 112

Thank You For Your Assistance

The request for issuing the above-identified correction(s) is hereby:

Note your decision on the appropriate box.

- ☑ **Approved** — **All** changes apply.
- ☐ **Approved in Part** — Specify below which changes **do not** apply.
- ☐ **Denied** — State the reasons for denial below.

Comments: _____

SPE — 3764 Art Unit

UNITED STATES PATENT AND TRADEMARK OFFICE

COMMISSIONER FOR PATENTS
UNITED STATES PATENT AND TRADEMARK OFFICE
P.O. BOX 1450
ALEXANDRIA, VA 22313-1450
www.uspto.gov

MAILED

AUG 15 2007

TECHNOLOGY CENTER 2100

Procopio, Cory, Hargreaves & Savitch LLP
530 B Street, Suite 2100
San Diego, California 92101-4469

In re Application of: Trent M. Thomas
Application No. 10/367,650
Attorney Docket No. PO400-02.CN1
Filed: February 14, 2003
For: SELF -CONTAINED APPLICATION DISK FOR AUTOMATICALLY LAUNCHING APPLICATION SOFTWARE OR STARTING DEVICES AND PERIPHERALS

DECISION ON PETITION

This is a decision on the petition filed on March 21, 2007, requesting that the shortened statutory period for reply set forth in the Office communication (Requirement for Restriction/Election) mailed on September 29, 2006 be reset on the grounds that the attorney for applicant (Mr. Stephen C. Beuerle) did not receive the office action. The petition is being considered under 37 CFR §1.181.

The petition is **DISMISSED**.

Applicable Prosecution History

August 7, 2006	Power of Attorney and Change of Address filed.
September 29, 2006	Requirement for Restriction/Election mailed to old address.
March 21, 2007	Instant Petition filed, under 37 CFR 1.182 to reset time period for response. The petition is being filed as having been filed under 37 CFR 1.181.
March 21, 2007	Response to Requirement for Restriction/Election filed also.

RELIEF REQUESTED

The instant petition requests that the shortened statutory period for reply set forth in the Office communication (Requirement for Restriction/Election) mailed on September 29, 2006 be reset on the grounds that the attorney for applicant did not receive the office action.

OPINION

Petitioner asserts that the Office communication (Requirement for Restriction/Election) mailed on September 29, 2006 was not received by applicants, and states the following:

1. Applicant filed a new power of attorney and change of correspondence address on August 7, 2006.

2. The outstanding restriction requirement was sent to the old address on September 29, 2006. It should have been sent to the new address.

ANALYSIS

MPEP §710.06 [R-3]: Situations When Reply Period Is Reset or Restarted: reads in part:

"I. PETITIONS TO RESET A PERIOD FOR REPLY DUE TO LATE RECEIPT OF AN OFFICE ACTION
The Office will grant a petition to restart the previously set period for reply to an Office action to run from the date of receipt of the Office action at the correspondence address when the following criteria are met:
(A) the petition is filed within 2 weeks of the date of receipt of the Office action at the correspondence address;
(B) a substantial portion of the set reply period had elapsed on the date of receipt (e.g., at least 1 month of a 2- or 3-month reply period had elapsed); and
(C) the petition includes (1) evidence showing the date of receipt of the Office action at the correspondence address (e.g., a copy of the Office action having the date of receipt of the Office action at the correspondence address stamped thereon, a copy of the envelope (which contained the Office action) having the date of receipt of the Office action at the correspondence address stamped thereon, etc.), and (2) a statement setting forth the date of receipt of the Office action at the correspondence address and explaining how the evidence being presented establishes the date of receipt of the Office action at the correspondence address.
The petition filed on March 21, 2007, fails to comply with any of the M.P.E.P. §710.06 requirements set forth above for a grantable petition to reset a period for reply, because the petition fails to establish the date of receipt of the office action at the correspondence address. There is not even an indication in the petition of when the Requirement for Restriction/Election mailed on September 29, 2006 was actually received at the correspondence address.

It is presumed that applicants are in receipt of the Requirement for Restriction/Election mailed on September 29, 2006 since applicants have filed a response to that action on March 21, 2007. If applicant did not receive the office action mailed from the office on September 29, 2006, applicant must follow the requirements set forth in MPEP §711.03(c), which sets forth that the showing required to establish nonreceipt of an Office action includes the following:

a) a statement from the practitioner that the Office action was not received,
b) a statement from the practitioner attesting to the fact that a search of the file jacket and docket records indicates the Office communication was not received,
c) a copy of the docket record where the nonreceived Office communication would have been entered had it been received and docketed, and
d) a reference to the docket record in the practitioner's statement.

The evidence submitted to date only serves to establish the filing of the power of attorney and change of correspondence on August 7, 2006. It is presumed that the applicants are in receipt of the Requirement for Restriction/Election mailed on September 29, 2006 since applicants have filed a response to the Requirement for Restriction/Election on March 21, 2007. It is not clear how or when applicant received the communication on Requirement for Restriction/Election mailed on September 29, 2006.

For reasons set forth above, the petition is **DISMISSED**.

Any inquiry concerning this decision should be directed to the undersigned whose telephone number is (571) 272-4210.

Mano Padmanabhan
Quality Assurance Specialist,
Technology Center 2100, Work Group 2180

UNITED STATES PATENT AND TRADEMARK OFFICE

COMMISSIONER FOR PATENTS
UNITED STATES PATENT AND TRADEMARK OFFICE
P.O. BOX 1450
ALEXANDRIA, VA 22313-1450
www.uspto.gov

MAILED

OCT 01 2007

TECHNOLOGY CENTER 2100

Procopio, Cory, Hargreaves & Savitch LLP
530 B Street, Suite 2100
San Diego, California 92101-4469

In re Application of: Trent M. Thomas
Application No. 10/367,650
Attorney Docket No. PO400-02.CN1
Filed: February 14, 2003
For: SELF -CONTAINED APPLICATION DISK FOR AUTOMATICALLY LAUNCHING APPLICATION SOFTWARE OR STARTING DEVICES AND PERIPHERALS

DECISION ON PETITION

This is a decision on the petition filed on March 21, 2007, and the request for reconsideration of adverse decision filed September 20, 2007, requesting that the shortened statutory period for reply set forth in the Office communication (Requirement for Restriction/Election) mailed on September 29, 2006 be reset on the grounds that the attorney for applicant (Mr. Stephen C. Beuerle) did not receive the office action. The petition is being considered under 37 CFR §1.181.

The petition is **GRANTED**.

Applicable Prosecution History

August 7, 2006	Power of Attorney and Change of Address filed.
September 29, 2006	Requirement for Restriction/Election mailed to old address.
March 21, 2007	Instant Petition filed, under 37 CFR 1.182 to reset time period for response. The petition is being filed as having been filed under 37 CFR 1.181.
March 21, 2007	Response to Requirement for Restriction/Election filed also.

August 15, 2007	Petition dismissed on the grounds that applicants did not establish the date of actual receipt of the restriction requirement mailed on September 29, 2006.
September 20, 2007	Instant petition filed, under 37 CFR 1.182, requesting reconsideration of adverse decision, and to reset time period for response. The petition is being filed as having been filed under 37 CFR 1.181

RELIEF REQUESTED

The instant petition requests that the shortened statutory period for reply set forth in the Office communication (Requirement for Restriction/Election) mailed on September 29, 2006 be reset on the grounds that the attorney for applicant did not receive the office action.

OPINION

Petitioner asserts that the Office communication (Requirement for Restriction/Election) mailed on September 29, 2006 was not received by applicants, and states the following:

1. Applicant filed a new power of attorney and change of correspondence address on August 7, 2006.

2. The outstanding restriction requirement was sent to the old address on September 29, 2006. It should have been sent to the new address.

3. Restriction Requirement was downloaded from PAIR on March 16, 2007.

ANALYSIS

MPEP §710.06 [R-3]: Situations When Reply Period Is Reset or Restarted: reads in part:

"I. PETITIONS TO RESET A PERIOD FOR REPLY DUE TO LATE RECEIPT OF AN OFFICE ACTION
The Office will grant a petition to restart the previously set period for reply to an Office action to run from the date of receipt of the Office action at the correspondence address when the following criteria are met:
(A) the petition is filed within 2 weeks of the date of receipt of the Office action at the correspondence address;
(B) a substantial portion of the set reply period had elapsed on the date of receipt (e.g., at least 1 month of a 2- or 3-month reply period had elapsed); and
(C) the petition includes (1) evidence showing the date of receipt of the Office action at the correspondence address (e.g., a copy of the Office action having the date of receipt of the Office action at the correspondence address stamped thereon, a copy of the envelope (which contained the Office action) having the date of receipt of the Office action at the correspondence address stamped thereon, etc.), and (2) a statement setting forth the date of receipt of the Office

action at the correspondence address and explaining how the evidence being presented establishes the date of receipt of the Office action at the correspondence address.

The petition filed on September 20, 2007, sets the date of receipt of the office action as March 16, 2007, and includes a docket report to attest to the fact. The initial petition to reset the period for reply was filed on March 21, 2007, within 2 weeks of the date of receipt of the office action (restriction requirement). Accordingly, the petition filed on September 20, 2007 is found to meet the requirements set forth above for a grantable petition to reset a period for reply.

For reasons set forth above, the petition is **GRANTED**.

As per applicants request for a refund of the extension of time fee, the 5 months extension of time fee will be credited back to applicant's representative deposit account by TC support staff.

Any inquiry concerning this decision should be directed to the undersigned whose telephone number is (571) 272-4210.

Mano Padmanabhan

Mano Padmanabhan
Quality Assurance Specialist,
Technology Center 2100, Work Group 2180

UNITED STATES PATENT AND TRADEMARK OFFICE

FEB 12 2007

Commissioner for Patents
United States Patent and Trademark Office
P.O. Box 1450
Alexandria, VA 22313-1450
www.uspto.gov

JONDLE & ASSOCIATES P.C.
858 HAPPY CANYON ROAD SUITE 230
CASTLE ROCK CO 80108

In re Application of	:
Christopher N. Tinius	:
Serial No.: 10/367,656	: PETITION DECISION
Filed: February 15, 2003	:
Attorney Docket No.: 1760-281	:

This is in response to the petition under 37 CFR § 1.59(b), filed January 12, 2007, to expunge information from the above identified application. This application has been allowed.

Petitioner requests that the Reply to Request for Information Under 37 CFR 1.105, and all attachments thereto, submitted to the Patent Office on August 30, 2006, be expunged from the record. Petitioner states either: (A) that the information contains trade secret material, proprietary material and/or material that is subject to a protective order which has not been made public; or (B) that the information submitted was unintentionally submitted and the failure to obtain its return would cause irreparable harm to the party who submitted the information or to the party in interest on whose behalf the information was submitted, and the information has not otherwise been made public. The petition fee set forth in 37 CFR § 1.17(g) has been paid.

The reasons set forth in this petition establishes to the satisfaction of the Director that expungement of the information is appropriate. The file entries for those documents have been closed and as such the documents are no longer publicly available, which is the IFW equivalent to removal of a paper document from a paper file wrapper. Also, as stated in M.P.E.P. 724, upon allowance or other action closing prosecution in an application, petition may be made for return of Proprietary information. As this application has been allowed, the information is being returned to applicant.

Therefore, applicant's petition is GRANTED.

Should there be any questions about this decision please contact Marianne C. Seidel by letter addressed to Director, TC 1600, at the address listed above, or by telephone at 571-272-0584 or by facsimile sent to the general Office facsimile number, 703-872-9306.

George C. Elliott

George Elliott
Director, Technology Center 1600

UNITED STATES PATENT AND TRADEMARK OFFICE

Commissioner for Patents
United States Patent and Trademark Office
P.O. Box 1450
Alexandria, VA 22313-1450
www.uspto.gov

JOHN M. BENASSI
P. O. BOX 2016
RANCHO SANTA FE, CA 92067

COPY MAILED

AUG 17 2007

OFFICE OF PETITIONS

In re Application of	:	
Craig Kenton Stevens et al	:	
Application No. 10/367,357	:	DECISION ON PETITION
Filed: February 14, 2003	:	
Attorney Docket No. Benassi	:	

This is a decision on the petition under the unintentional provisions of 37 CFR 1.137(b), filed November 3, 2006, to revive the above-identified application.

The petition is **DISMISSED**.

Any request for reconsideration of this decision must be submitted within TWO (2) MONTHS from the mail date of this decision. Extensions of time under 37 CFR 1.136(a) are permitted. The reconsideration request should include a cover letter entitled "Renewed Petition under 37 CFR 1.137(b)." This is **not** a final agency action within the meaning of 5 U.S.C. § 704.

The application became abandoned for failure to reply in a timely manner to the non-final Office action mailed July 13, 2004, which set a shortened statutory period for reply of three (3) months. No extensions of time under the provisions of 37 CFR 1.136(a) were obtained. Accordingly, the application became abandoned on October 14, 2004. A Notice of Abandonment was mailed on March 11, 2005.

A grantable petition under 37 CFR 1.137(b) must be accompanied by: (1) the required reply, unless previously filed; (2) the petition fee as set forth in 37 CFR 1.17(m); (3) a statement that the entire delay in filing the required reply from the due date for the reply until the filing of a grantable petition pursuant to 37 CFR 1.137(b) was unintentional; and (4) any terminal disclaimer (and fee as set forth in 37 CFR 1.20(d)) required by 37 CFR 1.137(d). Where there is a question as to whether either

the abandonment or the delay in filing a petition under 37 CFR 1.137 was unintentional, the Director may require additional information. *See* MPEP 711.03(c)(II)(C) and (D). The instant petition lacks item (3).

There are three periods to be considered during the evaluation of a petition under 37 CFR 1.137(b):

(1) the delay in reply that originally resulted in the abandonment;

(2) the delay in filing an initial petition pursuant to 37 CFR 1.137(b) to revive the application; and

(3) the delay in filing a grantable petition pursuant to 37 CFR 1.137(b) to revive the application.

Currently, the delay has not been shown to the satisfaction of the Director to be unintentional for periods (1) and (2).

As to Period (1):

The patent statute at 35 U.S.C. § 41(a)(7) authorizes the Director to revive an "unintentionally abandoned application." The legislative history of Public Law 97-247 reveals that the purpose of 35 U.S.C. § 41(a)(7) is to permit the Office to have more discretion than in 35 U.S.C. §§ 133 or 151 to revive abandoned applications in appropriate circumstances, but places a limit on this discretion, stating that "[u]nder this section a petition accompanied by either a fee of $500 or a fee of $50 **would not be granted where the abandonment** or the failure to pay the fee for issuing the patent **was intentional** as opposed to being unintentional or unavoidable." [emphasis added]. See H.R. Rep. No. 542, 97th Cong., 2d Sess. 6-7 (1982), *reprinted in* 1982 U.S.C.C.A.N. 770-71. The revival of an intentionally abandoned application is antithetical to the meaning and intent of the statute and regulation.

35 U.S.C. § 41(a)(7) authorizes the Director to accept a petition "for the revival of an unintentionally abandoned application for a patent." As amended December 1, 1997, 37 CFR 1.137(b)(3) provides that a petition under 37 CFR 1.137(b) must be accompanied by a statement that the delay was unintentional, but provides that "[t]he Commissioner may require additional information where there is a question whether the delay was unintentional." Where, as here, there is a question whether the

initial delay was unintentional, the petitioner must meet the burden of establishing that the delay was unintentional within the meaning of 35 U.S.C. § 41(a)(7) and 37 CFR 1.137(b). *See* In re Application of G, 11 USPQ2d 1378, 1380 (Comm'r Pats. 1989); 37 CFR 1.137(b). Here, in view of the inordinate delay (over two years) in resuming prosecution, there is a question whether the entire delay was unintentional. Petitioner should note that the issue is not whether some of the delay was unintentional by any party; rather, the issue is whether the entire delay has been shown to the satisfaction of the Director to be unintentional.

The question under 37 CFR 1.137(b) for period (1) is whether the delay on the part of the party having the right or authority to reply to avoid abandonment (or not reply) was unintentional. Accordingly, any renewed petition must clearly identify the party having the right to reply to avoid abandonment on October 13, 2004 or by the extendable date of January 13, 2005. That party, in turn must explain what effort(s) was made to further reply to the outstanding Office action and further, why no reply was filed. If no effort was made to further reply, then that party must explain why the delay in this application does not result from a deliberate course of action (or inaction). Likewise, as John M. Benassi was counsel of record on the date of abandonment, then Mr. Benassi should explain why this application became abandoned while it was under his control and what efforts Mr. Benassi made to further reply of itself and with whom this matter was discussed outside of Mr. Benassi's firm. Copies of any correspondence relating to the filing, or to not filing a further reply to the outstanding Office action are required from responsible person(s), Mr. Benassi, and whoever else was involved with this application at the time of abandonment. Statements are required from any and all persons then at the firm of Mr. Benassi, and the responsible person(s) having firsthand knowledge of the circumstances surrounding the lack of a reply to the outstanding Office action. As the courts have made clear, it is pointless for the USPTO to revive a long abandoned application without an adequate showing that the delay did not result from a deliberate course of action. *See* Lawman Armor v. Simon, 2005 U.S. Dist. LEXIS 10843, 74 USPQ2d 1633 (DC EMich 2005); Field Hybrids, LLC v. Toyota Motor Corp., 2005 U.S. Dist. LEXIS 1159 (D. Minn Jan. 27, 2005); Lumenyte Int'l Corp. v. Cable Lite Corp., Nos. 96-1011, 96-1077, 1996 U.S. App. LEXIS 16400, 1996 WL 383927 (Fed. Cir. July 9, 1996) (unpublished) (patents held unenforceable due to a finding of inequitable conduct in submitting an inappropriate statement that the abandonment was unintentional).

As to Period (2):

Likewise, where the applicant deliberately chooses not to seek or persist in seeking the revival of an abandoned application, or where the applicant deliberately chooses to delay seeking the revival of an abandoned application, the resulting delay in seeking revival of the abandoned application cannot be considered as "unintentional" within the meaning of 37 CFR 1.137(b). *See* MPEP 711.03(c).

The language of both 35 U.S.C. § 41(a)(7) and 37 CFR 1.137(b) are clear and unambiguous, and furthermore, without qualification. That is, the delay in filing the reply during prosecution, as well as in filing the petition seeking revival, must have been, without qualification, "unintentional" for the reply to now be accepted on petition. The Office requires that the entire delay be at least unintentional as a prerequisite to revival of an abandoned application to prevent abuse and injury to the public. *See* H.R. Rep. No. 542, 97th Cong., 2d Sess. 7 (1982), reprinted in 1982 U.S.C.C.A.N. 771 ("[i]n order to prevent abuse and injury to the public the Commissioner . . . could require applicants to act promptly after becoming aware of the abandonment"). The December 1997 change to 37 CFR 1.137 did not create any new right to overcome an intentional delay in seeking revival, or in renewing an attempt at seeking revival, of an abandoned application. *See* Changes to Patent Practice and Procedure; Final Rule Notice, 62 Fed. Reg. 53131, 53160 (October 10, 1997), 1203 Off. Gaz. Pat. Office 63, 87 (October 21, 1997), which clearly stated clear that any protracted delay (here, over two years) could trigger, as here, a request for additional information. As the courts have since made clear, a protracted delay in seeking revival, as here, requires a petitioner's detailed explanation seeking to excuse the delay as opposed to USPTO acceptance of a general allegation of unintentional delay. *See* Lawman Armor v. Simon, 2005 U.S. Dist. LEXIS 10843, 74 USPQ2d 1633, at 1637-8 (DC EMich 2005); Field Hybrids, LLC v. Toyota Motor Corp., 2005 U.S. Dist. LEXIS 1159 (D. Minn Jan. 27, 2005) at *21-*23. Statements are required from any and all persons then at the firm of Mr. Benassi and the responsible person(s) having firsthand knowledge of the circumstances surrounding the protracted delay, after the abandonment date, in seeking revival. The Notice of Abandonment appears to indicate that confirmation was made on March 7, 2005 that this application was abandoned. Accordingly, petitioner should explain the delay in promptly seeking revival after confirming with the Examiner on March 7, 2005 that this

application was abandoned, a period of over one year and why the delay in filing a petition after this confirmation with the Examiner the delay should not be considered to have been intentional.

As noted in MPEP 711.03(c)(II), subsection D, in instances in which such petition was not filed within 1 year of the date of abandonment of the application, applicants should include:

> (A) the date that the applicant first became aware of the abandonment of the application; and
> (B) a showing as to how the delay in discovering the abandoned status of the application occurred despite the exercise of due care or diligence on the part of the applicant.

In either instance, applicant's failure to carry the burden of proof to establish that the "entire" delay was "unavoidable" or "unintentional" may lead to the denial of a petition under 37 CFR 1.137(b), regardless of the circumstances that originally resulted in the abandonment of the application.

See also New York University v. Autodesk, 2007 U.S. DIST LEXIS, U.S.District LEXIS 50832, *10 -*12 (S.D.N.Y. 2007)(protracted delay in seeking revival undercuts assertion of unintentional delay).

Any renewed petition may be addressed as follows:

By Mail: Mail Stop PETITION
Commissioner for Patents
P. O. Box 1450
Alexandria, VA 22313-1450

By hand: U. S. Patent and Trademark Office
Customer Service Window, Mail Stop Petitions
Randolph Building
401 Dulany Street
Alexandria, VA 22314

The centralized facsimile number is **(571) 273-8300.**

Correspondence regarding this decision may also be filed through the electronic filing system of the USPTO.

Telephone inquiries concerning this decision should be directed to the undersigned at (571) 272-3218.

Frances Hicks
Petitions Examiner
Office of Petitions

UNITED STATES PATENT AND TRADEMARK OFFICE

Commissioner for Patents
United States Patent and Trademark Office
P.O. Box 1450
Alexandria, VA 22313-1450
www.uspto.gov

TOWNSEND AND TOWNSEND AND CREW, LLP
TWO EMBARCADERO CENTER
EIGHTH FLOOR
SAN FRANCISCO, CA 94111-3834

COPY MAILED

JUN 16 2006

OFFICE OF PETITIONS

In re Application of	:	
Tom Saul	:	DECISION ON REQUEST
Application No. 10/367,666	:	TO WITHDRAW FROM
Filed: February 14, 2003	:	RECORD
Attorney Docket No. 018050-000910US	:	

This is a decision on the Request to Withdraw as attorney or agent of record under 37 CFR § 1.36(b), filed on October 14, 2005.

The request is **NOT APPROVED** as moot.

A review of the file record indicates that the power of attorney to all the attorneys or agents of record have been revoked by the assignee of the patent application. Accordingly, the request to withdraw under 37 CFR § 1.36(b) is moot.

The correspondence address of record has been changed and the new correspondence address is the address indicated below.

This application file is being referred to Technology Center Art Unit 3761, for review of the response to the Office action filed May 12, 2006.

Telephone inquires concerning this decision should be directed to Andrea Smith at (571) 272- 3226.

Andrea Smith
Petitions Examiner
Office of Petitions

Conferee:

cc: CAESAR, RIVISE, BERNSTEIN,
COHEN & POKOTILOW, LTD.
11TH FLOOR, SEVEN PENN CENTER
1635 MARKET STREET
PHILADELPHIA, PA 19103-2212

UNITED STATES PATENT AND TRADEMARK OFFICE

Commissioner for Patents
United States Patent and Trademark Office
P.O. Box 1450
Alexandria, VA 22313-1450
www.uspto.gov

HOWREY LLP-CA
C/O IP DOCKETING DEPARTMENT
2941 FAIRVIEW PARK DRIVE, SUITE 200
FALLS CHURCH, VA 22042-2924

MAILED

MAR 15 2010

OFFICE OF PETITIONS

In re Patent No. 7,038,656	:	
Issue Date: May 2, 2006	:	
Application No. 10/367,670	:	NOTICE
Filed: February 14, 2003	:	
Attorney Docket No. 26822-0019 P2	:	

This is a notice regarding your request for acceptance of a fee deficiency submission under 37 CFR 1.28.

The Office no longer investigates or rejects original or reissue patent under 37 CFR 1.56. **1098 Off. Gaz. Pat. Office 502 (January 3, 1989)**. Therefore, nothing in this Notice is intended to imply that an investigation was done.

Your fee deficiency submission under 37 CFR 1.28 is hereby **ACCEPTED**.

This patent is no longer entitled to small entity status. Accordingly, all future fees paid in this patent must be paid at the large entity rate.

Inquiries related to this communication should be directed to the undersigned at (571) 272-6059.

The patent file will be forwarded to the Files Repository.

A. Kelley

Alicia Kelley
Petitions Examiner
Office of Petitions

UNITED STATES PATENT AND TRADEMARK OFFICE

Commissioner for Patents
United States Patent and Trademark Office
P.O. Box 1450
Alexandria, VA 22313-1450
www.uspto.gov

AKIN GUMP STRAUSS HAUER & FELD LLP
One Commerce Square
2005 Market Street – Suite 2200
Philadelphia, PA 19103

MAIL

AUG 0 3 2005

DIRECTOR OFFICE
TECHNOLOGY CENTER 2100

In re Application of:
Wilbur H. HIGHLEYMAN, et al.
Application No. 10/367,675
Filed: February 13, 2003
For: METHOD OF INCREASING SYSTEM AVAILABILITY BY ASSIGNING PROCESS PAIRS TO PROCESSOR PAIRS

DECISION ON PETITION TO MAKE SPECIAL

This is a decision on the petition under 37 C.F.R. § 1.102(c) and M.P.E.P. § 708.02, Section IV: Applicant's Age, filed July 19, 2005 to make the above-identified application special.

A grantable petition to make special under 37 C.F.R. § 1.102(c) and in accordance with M.P.E.P. § 708.02, Section IV must include a showing, as by a birth certificate or the applicant's statement, that the applicant is sixty five (65) years of age or more. No fee is required for this petition.

The petition includes a statement that the applicant, Wilbur H. Highleyman, is over sixty five (65) years of age.

Accordingly, the petition is GRANTED. The application is being forwarded to the examiner for expedite prosecution.

For

Vincent N. Trans
Special Program Examiner
Technology Center 2100
Computer Architecture, Software, and Information Security
571-272-3613

UNITED STATES PATENT AND TRADEMARK OFFICE

COMMISSIONER FOR PATENTS
UNITED STATES PATENT AND TRADEMARK OFFICE
P.O. BOX 1450
ALEXANDRIA, VA 22313-1450
www.uspto.gov

HUMAN GENOME SCIENCES INC
INTELLECTUAL PROPERTY DEPT.
14200 SHADY GROVE ROAD
ROCKVILLE MD 20850

COPY MAILED

MAR 1 6 2004

OFFICE OF PETITIONS

Applicant: Chan et al.
Appl. No.: 10/367,724
Filing Date: February 19, 2003
Title: NOVEL G-PROTEIN COUPLED RECEPTOR, HLTEX11
Attorney Docket No.: PF602C1
Pub. No.: US 2003/0148465 A1
Pub. Date: August 7, 2003

This is a decision on the request for corrected patent application publication under 37 CFR 1.221(b), filed on October 7, 2003 for the above-identified application.

The request is granted.

The corrected patent application publication will be published in due course.

Inquires concerning this communication should be directed to Mark Polutta at (703) 308-8122 (voice) or (703) 746-3465 (facsimile).

Mark O. Polutta
Office of Patent Legal Administration
Office of the Deputy Commissioner
for Patent Examination Policy

UNITED STATES PATENT AND TRADEMARK OFFICE

Commissioner for Patents
United States Patent and Trademark Office
P.O. Box 1450
Alexandria, VA 22313-1450
www.uspto.gov

Date : October 30, 2007

Patent No. :7,263,706
Inventor(s) :.Hong-Kyun Yim et al.
Issued :August 28, 2007
Title : DISK CARTRIDGE AND DISK PLAYER USING THE SAME

Re: Request for Certificate of Correction

Consideration has been given your request for the issuance of a certificate of correction for the above-identified patent under the provisions of 37 CFR 1.322 and/or 1.323.

Assignees' names and addresses (assignment data) printed in a patent are based *solely* on information supplied in the appropriate space for identifying the assignment data, i.e., item 3 of the Fee(s) Transmittal Form PTOL-85B. After payment of the issue fee, correction of assignment data submitted on the PTOL-85B can only be done by Certificate of Correction under 37 CFR 1.323, with a request under 37 CFR 3.81(b).

A request for a patent to be corrected to state the name of the assignee must:

A. state that the assignment was submitted for recordation as set forth in 37 CFR 3.11 before issuance of the patent;

B. include a request for a certificate of correction under 37 CFR 1.323 along with the fee set forth in 37 CFR 1.20(a); and

C. include the processing fee set forth in 37 CFR 1.17(i).

If the request is granted, Certificates of Correction Branch will be notified that a Certificate of Correction may be issued.

See Manual of Patent Examining Procedure, Section 1481.01 (Rev. 3) (Oct. 2005).

Applicant has not included items A and or C above, accordingly, the request for Certificate of Correction to add or change the assignee data is dismissed.

Any request under 37 CFR 3.81(b) should be directed to the following address or facsimile number:

By mail: Mail Stop PETITIONS
Commissioner for Patents
Post Office Box 1450
Alexandria, VA 22313-1450

By hand: Customer Service Window
Randolph Building
401 Dulany Street
Alexandria, VA 22314

By fax: 571-273-8300
ATTN: Office of Petitions

If a fee (currently $100) was previously submitted for consideration of a Request for Certificate of Correction, under CFR 1.323, to correct assignment data, no additional fee is required.

Any inquiry concerning this communication should be directed to Ms. A. Green at (703) 308-9380 ext. 123.

For Cecelia Newman
Decisions & Certificates
of Correction Branch
(703) 308-9390 or (703) 308-9380 ext. 123

Stein, Mcewen & Bui, LLP
400 Eye street, Ne
Suite 300
Washinngton, DC 20005

CBN/arg

UNITED STATES PATENT AND TRADEMARK OFFICE

Commissioner for Patents
United States Patent and Trademark Office
P.O. Box 1450
Alexandria, VA 22313-1450
www.uspto.gov

STEIN, MCEWEN & BUI, LLP
1400 EYE STREET, NW
SUITE 300
WASHINGTON DC 20005

COPY MAILED

FEB 0 4 2008

OFFICE OF PETITIONS

In re Patent No. 7,263,706	:	
Application No. 10/367,739	:	
Filed: February 19, 2003	:	ON PETITION
Issued: August 28, 2007	:	
Attorney Docket No. 1293.1333	:	

This is a decision on the petition filed December 26, 2007, which is being treated as a request under 37 CFR 3.81(b)[1] to add the name of the second assignee on the front page of the above-identified patent by way of a Certificate of Correction.

The request is **GRANTED**.

The patent file is being forwarded to the Certificates of Correction Branch for issuance of the requested Certificate of Correction.

Telephone inquiries concerning this decision may be directed to the undersigned at (571) 272-3206. Inquiries regarding the issuance of a certificate of correction should be directed to the Certificate of Correction Branch at (571) 272-4200.

Liana Walsh
Petitions Examiner
Office of Petitions

[1] *See* MPEP 1309, subsection II; and Official Gazette of June 22, 2004.

UNITED STATES PATENT AND TRADEMARK OFFICE

Commissioner for Patents
United States Patent and Trademark Office
P.O. Box 1450
Alexandria, VA 22313-1450
www.uspto.gov

FITZPATRICK CELLA HARPER & SCINTO
30 ROCKEFELLER PLAZA
NEW YORK, NY 10112-3800

COPY MAILED

NOV 05 2004

OFFICE OF PETITIONS

In re Application of :
Takeshi Arimitsu et al :
Application No. 10/367,805 :
Filed: February 19, 2003 :
Attorney Docket No. 03500.017031

ON PETITION

This is a decision on the petition, filed November 4, 2004, under 37 CFR 1.313(c)(2) to withdraw the above-identified application from issue after payment of the issue fee.

The petition is **GRANTED**.

The above-identified application is withdrawn from issue for consideration of a submission under 37 CFR 1.114 (request for continued examination). See 37 CFR 1.313(c)(2).

Petitioner is advised that the issue fee paid on September 22, 2004 in the above-identified application cannot be refunded. If, however, the above-identified application is again allowed, petitioner may request that it be applied towards the issue fee required by the new Notice of Allowance.[1]

Telephone inquiries should be directed to Irvin Dingle at (571) 272-3210.

This matter will be forwarded to Technology Center AU 2852 for processing of the request for continued examination under 37 CFR 1.114 and for consideration of the concurrently filed Information Disclosure Statement.

Irvin Dingle
Petitions Examiner
Office of Petitions
Office of the Deputy Commissioner
for Patent Examination Policy

---

[1] The request to apply the issue fee to the new Notice may be satisfied by completing and returning the new Issue Fee Transmittal Form PTOL-85(b), which includes the following language thereon: Commissioner for Patents is requested to apply the Issue Fee and Publication Fee (if any) or re-apply any previously paid issue fee to the application identified above. Petitioner is advised that, whether a fee is indicated as being due or not, the Issue Fee Transmittal Form **must** be completed and timely submitted to avoid abandonment. Note the language in bold text on the first page of the Notice of Allowance and Fee(s) Due (PTOL-85).

UNITED STATES PATENT AND TRADEMARK OFFICE

COMMISSIONER FOR PATENT
UNITED STATES PATENT AND TRADEMARK OFFIC
WASHINGTON, D.C. 20231
www.uspto.go

Paper No. 4

WENDEROTH, LIND & PONACK, L.L.P.
2033 K STREET N.W.
SUITE 800
WASHINGTON, DC 20006-1021

COPY MAILED

APR 1 5 2003

OFFICE OF PETITIONS

In re Application of :
Ikuhito Miyashita :
Application No. 10/367,809 :
Filed: February 19, 2003 :
Attorney Docket No. 2003-0199A :

NOTICE

This is a notice regarding your request for acceptance of a fee deficiency submission under 37 CFR 1.28. On September 1, 1998, the Court of Appeals for the Federal Circuit held that 37 CFR 1.28(c) is the sole provision governing the time for correction of the erroneous payment of the issue fee as a small entity. **See DH Technology v. Synergystex International, Inc. 154 F.3d 1333, 47 USPQ2d 1865 (Fed. Cir. Sept. 1, 1998).**

The Office no longer investigates or rejects original or reissue applications under 37 CFR 1.56. **1098 Off. Gaz. Pat. Office 502 (January 3, 1989)**. Therefore, nothing in this Notice is intended to imply that an investigation was done.

Your fee deficiency submission under 37 CFR 1.28 is hereby **ACCEPTED**.

Inquiries related to this communication should be directed to the Office of Petitions Staff at (703) 305-9285.

This file is being forwarded to Technology Center 2800.

Irvin Dingle
Petitions Examiner
Office of Petitions
Office of the Deputy Commissioner
for Patent Examination Policy

UNITED STATES PATENT AND TRADEMARK OFFICE

Commissioner for Patents
United States Patent and Trademark Office
P.O. Box 1450
Alexandria, VA 22313-1450
www.uspto.gov
DIW 10-04

OLIFF & BERRIDGE, PLC
P.O. BOX 19928
ALEXANDRIA VA 22320

COPY MAILED

OCT 0 6 2004

OFFICE OF PETITIONS

In re Application of	:	
Suzuki et al.	:	DECISION ON PETITION
Application No. 10/367,816	:	
Filed: 19 February, 2003	:	
Atty Docket No. 114935	:	

This is a decision on the petition under 37 CFR 1.181, filed on 9 June, 2003, concerning a claim for priority under 37 CFR 1.55(a).

The Office apologizes for the delay in responding to the present petition and regrets any inconvenience to petitioners.

The petition is granted.

On 19 February, 2003, the above identified application was filed.

On 10 March, 2003, a certified copy of Japanese Application 2002-040559, filed on 18 February, 2002, was filed, along with a claim for priority under 35 U.S.C. § 119 (a)-(d) and (f) to the above referenced case.

On 9 June, 2003, the present petition was filed. Petitioners state that although the present application was filed more than 12 months after the date the prior foreign application was filed, the claim filed on 10 March, 2003, should be accepted as proper because the USPTO was closed on 18 February, 2003.

It is noted that on 25 March, 2003, the following Notice appeared in the *Official Gazette:*

> Closing of the United States Patent and Trademark Office on Tuesday, February 18, 2003 In view of the official closing of the Federal Government offices in the Washington, D.C. metropolitan area, including the United States Patent and Trademark Office, on Tuesday, February 18, 2003, the United States Patent and Trademark Office will consider February 18, 2003, a "Federal holiday within the District of Columbia" under 35 U.S.C. 21 and 37 C.F.R. 1.6, 1.7 and 1.9. Any action or fee due on February 18, 2003, will be

considered as timely for the purposes of, e.g., 35 U.S.C. 119, 120, 133 and 151, if the action is taken, or the fee paid, on the next succeeding business day on which the United States Patent and Trademark Office was open, that is, Wednesday, February 19, 2003.

37 C.F.R. 1.6(a)(2) and (4) provide that correspondence deposited as Express Mail in accordance with 37 C.F.R. 1.10, and trademark-related correspondence transmitted electronically, will be considered filed on the date of deposit with the United States Postal Service, or the date the United States Patent and Trademark Office receives the electronic transmission, respectively. Thus, any paper or fee properly deposited as Express Mail on Tuesday, February 18, 2003, in accordance with 37 C.F.R. 1.10 (that is, shown by a "date-in" of Tuesday, February 18, 2003, on the Express Mail mailing label), or trademark-related correspondence transmitted electronically on Tuesday, February 18, 2003, will be considered filed on its respective date of deposit in Express Mail, or receipt of the electronic transmission.

In view of the above, applicants' request is granted.

The foreign priority claim has been entered in Office PALM records. A corrected Filing Receipt is enclosed which includes the foreign priority claim.

As this petition was necessitated by an error on the part of the Office, no petition fee is due.

The application will be forwarded to Technology Center 2800 for further processing and for consideration by the examiner of record of the foreign priority claim under 35 U.S.C. § 119(a)-(d) and (f).

Any inquiries directly pertaining to this matter may be directed to the undersigned at 571-272-3231.

D Wood

Douglas I. Wood
Senior Petitions Attorney
Office of Petitions

Encl: Corrected Filing Receipt

SPE RESPONSE FOR CERTIFICATE OF CORRECTION

Paper No.:20070813

DATE : August 13, 2007

TO SPE OF : ART UNIT 2818

SUBJECT : Request for Certificate of Correction on Patent No.: 6,946,715

A response is requested with respect to the accompanying request for a certificate of correction.

Please complete this form and return with file, within **7** days to:
Certificates of Correction Branch - PK 3-910
Palm location **7590** - Tel. No. 305-8201

With respect to the change(s) requested, correcting Office and/or Applicant's errors, should the patent read as shown in the certificate of correction? No new matter should be introduced, nor should the scope or meaning of the claims be changed.

Thank You For Your Assistance **Certificates of Correction Branch**

The request for issuing the above-identified correction(s) is hereby:
Note your decision on the appropriate box.

☒ **Approved** **All** changes apply.

☐ **Approved in Part** Specify below which changes **do not** apply.

☐ **Denied** State the reasons for denial below.

Comments:

SPE: Steven Loke **Art Unit** 2818

Steven Loke

UNITED STATES PATENT AND TRADEMARK OFFICE

Commissioner for Patents
United States Patent and Trademark Office
P.O. Box 1450
Alexandria, VA 22313-1450
www.uspto.gov

MAILED

JUN 04 2010

OFFICE OF PETITIONS

OBLON, SPIVAK, MCCLELLAND MAIER & NEUSTADT, L.L.P.
1940 DUKE STREET
ALEXANDRIA, VA 22314

In re Patent of Nakaya et al.	:	DECISION ON REQUEST
Patent No. 7,615,272	:	FOR RECONSIDERATION OF
Issue Date: November 10, 2009	:	PATENT TERM ADJUSTMENT
Application No. 10/367,833	:	AND NOTICE OF INTENT TO
Filing Date: February 19, 2003	:	ISSUE CERTIFICATE OF
Attorney Docket No. 233797US0	:	CORRECTION

This is a decision on the petition filed January 8, 2010, which is being treated as a petition under 37 C.F.R. § 1.705(d) requesting the patent term adjustment indicated on the patent be corrected to indicate the term of the patent is extended or adjusted by one thousand four hundred ten (1410) days.

The petition to correct the patent term adjustment indicated on the patent to indicate the term of the patent is extended or adjusted by four hundred ten (1410) days is **GRANTED to the extent indicated herein**.

The Office will *sua sponte* issue a certificate of correction. Pursuant to 37 C.F.R. § 1.322, the Office will not issue a certificate of correction without first providing assignee or patentee an opportunity to be heard. Accordingly, Patentees are given **one (1) month or thirty (30) days**, whichever is longer, from the mail date of this decision to respond. No extensions of time will be granted under 37 C.F.R. § 1.136.

The amount of delay under 35 U.S.C. § 154(b)(1)(A) ("A Delay"), amount of delay under 35 U.S.C. § 154(b)(1)(C) ("C Delay"), and amount of delay under 35 U.S.C. § 154(b)(2)(C) ("Applicant Delay") are not in dispute.

The amount of delay under 35 U.S.C. § 154(b)(1)(B) ("B Delay") and the amount of overlap between A Delay and B Delay are in dispute.

B Delay

The application was filed February 19, 2003.

The application issued on November 10, 2009, which is three years and 1,360 days after the application was filed.

Pursuant to 35 U.S.C. § 154(b)(1)(B)(ii), B Delay does not include any time period consumed by appellate review.

The instant case includes two periods of time consumed by appellate review.

The first period of appellate review is the time period beginning December 19, 2005, the date a Notice of Appeal was filed, and ending March 20, 2006, the date a non-final Office action reopening prosecution was filed.

The second period of appellate review is the 726-day time period beginning March 9, 2007, the date a Notice of Appeal was filed, and ending March 3, 2009, the date a Board of Patent Appeals and Interferences issued a decision.

Patentees contend the period of B Delay is 634 days. However, when calculating the period of B Delay, Patentees failed to exclude any time for the first period of appellate review. In other words, Patentees incorrectly included the 29-day time period from February 20, 2006, to March 20, 2006, as part of the period of delay.

The correct period of B Delay is 605 days (1360 - 726 - 29).

Overlap Between A Delay and B Delay

The period of A Delay includes the 22-day time period from February 27, 2005, to March 20, 2006.

As previously stated, the petition improperly includes the 29-day time period from February 20, 2006, to March 20, 2006, as part of the period of B delay. As a result, the petition asserts the period of overlap between A Delay and B Delay is 22 days.

The period of B Delay does not actually include the 29-day time period. As a result, the actual amount of overlap is 0 days.

Conclusion

In view of the prior discussion, the period of patent term adjustment is 1,413 days, which is the sum of 183 days of A Delay, 605 days of B Delay, and 726 days of C Delay reduced by 0 days of overlap between A and B Delay and reduced by 101 days of Applicant Delay.

The Office acknowledges submission of the $200.00 fee set forth in 37 C.F.R. § 1.18(e). No additional fees are required.

The application is being forwarded to the Certificates of Correction Branch for issuance of a certificate of correction. The Office will issue a certificate of correction indicating that the term of the patent is extended or adjusted by **one thousand four hundred thirteen (1413)** days.

Telephone inquiries specific to this decision should be directed to Senior Petitions Attorney Steven Brantley at (571) 272-3203.

Charles Steven Brantley
Senior Petitions Attorney
Office of Petitions

Enclosure: Copy of DRAFT Certificate of Correction

UNITED STATES PATENT AND TRADEMARK OFFICE

CERTIFICATE OF CORRECTION

PATENT NO.	:	7,615,272 B2
APPLICATION NO.	:	10/367,833
DATED	:	November 10, 2009
INVENTOR(S)	:	Masakazu Nakaya et al.

DRAFT

It is certified that error appears in the above-identified patent and that said Letters Patent is hereby corrected as shown below:

On the Title page,

[*] Notice: Subject to any disclaimer, the term of this patent is extended or adjusted under 35 U.S.C. 154(b) by 1259 days.

Delete the phrase "by 1259 days" and insert -- by 1413 days--

UNITED STATES PATENT AND TRADEMARK OFFICE

COMMISSIONER FOR PATENTS
UNITED STATES PATENT AND TRADEMARK OFFICE
P.O. BOX 1450
ALEXANDRIA, VA 22313-1450
www.uspto.gov

OLIFF & BERRIDGE, PLC
P.O. BOX 19928
ALEXANDRIA , VA 22320

COPY MAILED

DEC 3 1 2003

OFFICE OF PETITIONS

In re Application of
Matsuo et al
Application No. 10/367,846
Filed: February 19, 2003
Attorney Docket No. 115068

: DECISION GRANTING PETITION
: UNDER 37 CFR 1.181

This is a decision on the petition filed October 27, 2003, which is being treated as a petition under 37 CFR 1.181 (no fee) requesting that the Office of Initial Patent Examination (OIPE) acknowledge applicants' claim for foreign priority benefit under 35 U.S.C. 119, and issue a corrected filing receipt.

The petition is **granted**.

Petitioners assert that in a Response to Request for Corrected Filing Receipt, priority from JP 040,639 filed February 18, 2002, was denied because the foreign application was filed over a year prior to the filing date of the above-referenced non provisional application. Petitioners note that the U.S. Patent and Trademark Office was closed on February 18, 2003, due to inclement weather, and as such, the above-identified application was not filed until February 19, 2003. Since, petitioners correctly contend, a closure of the U.S. Patent and Trademark Office due to inclement weather is considered a federal holiday and any action due on such day may be taken on the next succeeding business day (MPEP 201.13, 37 C.F.R. 11.9(h), and 37 C.F.R. 1.6(a)(1)), the filing receipt for this application should reflect applicants' claim for benefit of the prior Japanese application.

The Office of Initial Patent Examination is instructed to issue a corrected filing receipt for the above-identified application, that indicates thereon applicants' claim for benefit under 35 U.S.C. 119 of JP 040,639 filed February 18, 2002.

Telephone inquiries related to this decision should be addressed to the undersigned at (703) 305-1820.

Brian Hearn

Brian Hearn
Petitions Examiner
Office of Petitions
Office of the Deputy Commissioner
for Patent Examination Policy

UNITED STATES PATENT AND TRADEMARK OFFICE

Commissioner for Patents
United States Patent and Trademark Office
P.O. Box 1450
Alexandria, VA 22313-1450
www.uspto.gov

MELVIN I. STOLTZ
51 CHERRY STREET
MILFORD, CT 06460

COPY MAILED

JUN 17 2005

OFFICE OF PETITIONS

In re Application of	:	ON PETITION
John Peter Trask	:	
Application No. 10/367,868	:	
Filed: February 12, 2003	:	
Attorney Docket No. 506-092	:	

This is a decision on the petition under 37 CFR 1.137(b), filed March 16, 2005, to revive the above-identified application.

The petition is **GRANTED**.

The above-identified application became abandoned for failure to reply within the meaning of 37 CFR 1.113 in a timely manner to the final Office action mailed June 17, 2004, which set a shortened statutory period for reply of three (3) months. A reply under 37 CFR 1.113 is limited to an amendment that *prima facie* places the application in condition for allowance or a Notice of Appeal (and appeal fee required by 37 CFR 1.17(b)). The amendment submitted on December 13, 2004 , did not *prima facie* place the application in condition for allowance as noted in the Advisory Action mailed January 10, 2005. Therefore, as no Notice of Appeal (and appeal fee), Request for Continued Examination (RCE) or a continuing application was timely filed. Extension of time under the provisions of 37 CFR 1.136(a) was obtained. Accordingly, the above-identified application became abandoned on December 18, 2004.

Telephone inquiries concerning this decision should be directed to Wan Laymon at (571) 272-3220.

This matter is being referred to Technology Center AU 3671.

Wan Laymon

Wan Laymon
Petitions Examiner
Office of Petitions
Office of the Deputy Commissioner
for Patent Examination Policy

UNITED STATES PATENT AND TRADEMARK OFFICE

COMMISSIONER FOR PATENTS
UNITED STATES PATENT AND TRADEMARK OFFICE
P.O. BOX 1450
ALEXANDRIA, VA 22313-1450
WWW.USPTO.GOV

Paper No. 7

SUGHRUE MION, PLLC
2100 PENNSYLVANIA AVENUE, N.W.
WASHINGTON, DC 20037

COPY MAILED

AUG 27 2003

OFFICE OF PETITIONS

In re Application of
Ryo Koyasu
Application No. 10/367,879
Filed: February 19, 2003
Attorney Docket No. Q74248

DECISION ON PETITION

This is a decision on the paper styled "PETITION TO RESPONSE TO NOTICE TO REQUEST CORRECTED FILING RECEIPT," filed July 22, 2003, requesting that the priority date of February 18, 2002 be maintained in the above-identified application. The petition is properly treated under 37 CFR § 1.181.

Application papers in the above-identified application were filed on February 19, 2003. The application papers included a claim for benefit of priority under 35 U.S.C. § 119 of foreign application JP2002-040520, filed February 18, 2002. However, on May 1, 2003, the Office mailed applicant a filing receipt which did not include this foreign application. In response, on May 15, 2003, applicant filed a petition, requesting that the foreign priority claim be maintained[1]. In a form response, the Office of Initial Patent Examination (OIPE) denied the request on the basis that the application to which priority is claimed was filed over a year prior to the filing date of the instant application.

Applicant has now resubmitted the issue to the Office of Petitions for consideration. Petitioner's arguments and evidence have been considered and found persuasive.

For the reasons set forth below, the petition under § 1.181 is **GRANTED**.

35 U.S.C. 119 provides that:

> (a) An application for patent for an invention filed in this country by any person who has, or whose legal representatives or assigns have, previously regularly filed an application for a patent for the same invention in a foreign country which affords similar privileges in the case of applications filed in the United States or to citizens of

[1] This petition was identical in substance to the instant petition submitted July 22, 2003 (and directed to the Office of Petitions for consideration).

> the United States, or in a WTO member country, shall have the same effect as the same application would have if filed in this country on the date on which the application for patent for the same invention was first filed in such foreign country, if the application in this country is filed within twelve months from the earliest date on which such foreign application was filed; but no patent shall be granted on any application for patent for an invention which had been patented or described in a printed publication in any country more than one year before the date of the actual filing of the application in this country, or which had been in public use or on sale in this country more than one year prior to such filing.

As asserted by applicant, the Office by Official Gazette Notice dated March 25, 2003 (1268 OG 125), provided, in pertinent part, that:

> In view of the official closing of the Federal Government offices in the Washington, D.C. metropolitan area, including the United States Patent and Trademark Office, on Tuesday, February 18, 2003, the United States Patent and Trademark Office will consider February 18, 2003, a "Federal holiday within the District of Columbia" under 35 U.S.C. 21 and 37 C.F.R. 1.6, 1.7 and 1.9. Any action or fee due on February 18, 2003, will be considered as timely for the purposes of, e.g., 35 U.S.C. 119, 120, 133 and 151, if the action is taken, or the fee paid, on the next succeeding business day on which the United States Patent and Trademark Office was open, that is, Wednesday, February 19, 2003.

The relief requested by applicant is provided for in the Notice. It is undisputed that the application was received in the Office on February 19, 2003. The filing of the application due by February 18, 2003 (the last date that was within twelve months from the earliest date on which a foreign application to which priority is claimed was filed) under 35 U.S.C. 119, occurred on the next succeeding business day, February 19, 2003. This was due to the closing of the Office on February 18, 2003, as stated in the application papers filed February 19, 2003.

Given the basis for granting this petition, no petition fee is required and none has been charged.

This application is being forwarded to the Office of Initial Patent Examination (OIPE) **to enter in this application the foreign priority claim to JP2002-040520 filed February 18, 2002** and **to mail a corrected filing receipt**. It is noted that a certified copy of the priority document was filed on April 24, 2003.

Telephone inquiries specific to this decision should be directed to the undersigned at (703) 305-0309.

Nancy Johnson

Nancy Johnson
Senior Petitions Attorney
Office of Petitions

UNITED STATES PATENT AND TRADEMARK OFFICE

Commissioner for Patents
United States Patent and Trademark Office
P.O. Box 1450
Alexandria, VA 22313-1450
www.uspto.gov

COPY MAILED

MAR 0 2 2007

OFFICE OF PETITIONS

DYKEMA GOSSETT PLLC
FRANKLIN SQUARE, THIRD FLOOR WEST
1300 I STREET, NW
WASHINGTON, DC 20005

In re Application of	:	
Kim Spetzler Petersen et al	:	
Application No. 10/367,955	:	DECISION ON PETITION
Filed: February 19, 2003	:	
Attorney Docket No. 66722-023-7	:	

This is a decision on the petition under 37 CFR 1.182, filed, October 4, 2006, to change the name of inventor "Thomas Bo Nielsen" to – Thomas Bo Elmedyb --.

The petition is **GRANTED**.

Office records have been updated to reflect the inventor's change of name. A corrected Filing Receipt, which reflects the inventor's change of name, accompanies this decision on petition.

Any questions concerning this matter may be directed to Irvin Dingle at (571) 272-3210. Any questions concerning the examination procedures or status of the application should be directed to the Technology Center.

This application is being referred to Technology Center AU 2615 for processing.

Irvin Dingle
Petition Examiner
Office of Petitions

ATTACHMENT: Corrected Filing Receipt

UNITED STATES PATENT AND TRADEMARK OFFICE

UNITED STATES DEPARTMENT OF COMMERCE
United States Patent and Trademark Office
Address: COMMISSIONER FOR PATENTS
P.O. Box 1450
Alexandria, Virginia 22313-1450
www.uspto.gov

APPL NO.	FILING OR 371 (c) DATE	ART UNIT	FIL FEE REC'D	ATTY.DOCKET NO	DRAWINGS	TOT CLMS	IND CLMS
10/367,955	02/19/2003	2615	1000	66722-023-7	2	22	4

CONFIRMATION NO. 2141
CORRECTED FILING RECEIPT
OC000000022729912
OC000000022729912

25269
DYKEMA GOSSETT PLLC
FRANKLIN SQUARE, THIRD FLOOR WEST
1300 I STREET, NW
WASHINGTON, DC 20005

Date Mailed: 03/02/2007

Receipt is acknowledged of this regular Patent Application. It will be considered in its order and you will be notified as to the results of the examination. Be sure to provide the U.S. APPLICATION NUMBER, FILING DATE, NAME OF APPLICANT, and TITLE OF INVENTION when inquiring about this application. Fees transmitted by check or draft are subject to collection. Please verify the accuracy of the data presented on this receipt. **If an error is noted on this Filing Receipt, please mail to the Commissioner for Patents P.O. Box 1450 Alexandria Va 22313-1450. Please provide a copy of this Filing Receipt with the changes noted thereon. If you received a "Notice to File Missing Parts" for this application, please submit any corrections to this Filing Receipt with your reply to the Notice. When the USPTO processes the reply to the Notice, the USPTO will generate another Filing Receipt incorporating the requested corrections (if appropriate).**

Applicant(s)

Kim Spetzler Petersen, Hellerup, DENMARK;
Gudmundur Bogason, Hellerup, DENMARK;
Ulrik Kjems, Hellerup, DENMARK;
Thomas Bo Elmedyb, Hellerup, DENMARK;

Power of Attorney:
Richard Tushin--27297

Domestic Priority data as claimed by applicant

Foreign Applications

If Required, Foreign Filing License Granted: 04/03/2003

The country code and number of your priority application, to be used for filing abroad under the Paris Convention, is US10/367,955

Projected Publication Date: Not Applicable

Non-Publication Request: No

Early Publication Request: No

Title

Device and method for detecting wind noise

Preliminary Class

381

PROTECTING YOUR INVENTION OUTSIDE THE UNITED STATES

Since the rights granted by a U.S. patent extend only throughout the territory of the United States and have no effect in a foreign country, an inventor who wishes patent protection in another country must apply for a patent in a specific country or in regional patent offices. Applicants may wish to consider the filing of an international application under the Patent Cooperation Treaty (PCT). An international (PCT) application generally has the same effect as a regular national patent application in each PCT-member country. The PCT process **simplifies** the filing of patent applications on the same invention in member countries, but **does not result** in a grant of "an international patent" and does not eliminate the need of applicants to file additional documents and fees in countries where patent protection is desired.

Almost every country has its own patent law, and a person desiring a patent in a particular country must make an application for patent in that country in accordance with its particular laws. Since the laws of many countries differ in various respects from the patent law of the United States, applicants are advised to seek guidance from specific foreign countries to ensure that patent rights are not lost prematurely.

Applicants also are advised that in the case of inventions made in the United States, the Director of the USPTO must issue a license before applicants can apply for a patent in a foreign country. The filing of a U.S. patent application serves as a request for a foreign filing license. The application's filing receipt contains further information and guidance as to the status of applicant's license for foreign filing.

Applicants may wish to consult the USPTO booklet, "General Information Concerning Patents" (specifically, the section entitled "Treaties and Foreign Patents") for more information on timeframes and deadlines for filing foreign patent applications. The guide is available either by contacting the USPTO Contact Center at 800-786-9199, or it can be viewed on the USPTO website at http://www.uspto.gov/web/offices/pac/doc/general/index.html.

For information on preventing theft of your intellectual property (patents, trademarks and copyrights), you may wish to consult the U.S. Government website, http://www.stopfakes.gov. Part of a Department of Commerce initiative, this website includes self-help "toolkits" giving innovators guidance on how to protect intellectual property in specific countries such as China, Korea and Mexico. For questions regarding patent enforcement issues, applicants may call the U.S. Government hotline at 1-866-999-HALT (1-866-999-4158).

LICENSE FOR FOREIGN FILING UNDER
Title 35, United States Code, Section 184
Title 37, Code of Federal Regulations, 5.11 & 5.15

GRANTED

The applicant has been granted a license under 35 U.S.C. 184, if the phrase "IF REQUIRED, FOREIGN FILING LICENSE GRANTED" followed by a date appears on this form. Such licenses are issued in all applications where the conditions for issuance of a license have been met, regardless of whether or not a license may be required as set forth in 37 CFR 5.15. The scope and limitations of this license are set forth in 37 CFR 5.15(a) unless an earlier license has been issued under 37 CFR 5.15(b). The license is subject to revocation upon written notification. The date indicated is the effective date of the license, unless an earlier license of similar scope has been granted under 37 CFR 5.13 or 5.14.

This license is to be retained by the licensee and may be used at any time on or after the effective date thereof unless it is revoked. This license is automatically transferred to any related applications(s) filed under 37 CFR 1.53(d). This license is not retroactive.

The grant of a license does not in any way lessen the responsibility of a licensee for the security of the subject matter as imposed by any Government contract or the provisions of existing laws relating to espionage and the national security or the export of technical data. Licensees should apprise themselves of current regulations especially with respect to certain countries, of other agencies, particularly the Office of Defense Trade Controls, Department of State (with respect to Arms, Munitions and Implements of War (22 CFR 121-128)); the Bureau of Industry and Security, Department of Commerce (15 CFR parts 730-774); the Office of Foreign Assets Control, Department of Treasury (31 CFR Parts 500+) and the Department of Energy.

NOT GRANTED

No license under 35 U.S.C. 184 has been granted at this time, if the phrase "IF REQUIRED, FOREIGN FILING LICENSE GRANTED" DOES NOT appear on this form. Applicant may still petition for a license under 37 CFR 5.12, if a license is desired before the expiration of 6 months from the filing date of the application. If 6 months has lapsed from the filing date of this application and the licensee has not received any indication of a secrecy order under 35 U.S.C. 181, the licensee may foreign file the application pursuant to 37 CFR 5.15(b).

UNITED STATES PATENT AND TRADEMARK OFFICE

COMMISSIONER FOR PATENTS
UNITED STATES PATENT AND TRADEMARK OFFICE
P.O. BOX 1450
ALEXANDRIA, VA 22313-1450
www.uspto.gov

Paper No. 9

CROWELL & MORING LLP
INTELLECTUAL PROPERTY GROUP
P.O. BOX 14300
SHELTON, CT 06484-8000

COPY MAILED

NOV 2 5 2003

OFFICE OF PETITIONS

In re Application of:
Christian Maini, Andreas Sahner
and Laurent Favareille
Application No. 10/367,960
Filed: February 19, 2003
Title of Invention: CONNECTOR
SYSTEM

ON PETITION

This is in response to a petition under 37 CFR 1.47(a), filed October 3, 2003, to allow the other inventor(s) to proceed with the application on behalf of himself or herself and the nonsigning inventor.

The petition is **dismissed**.

Rule 47 applicant is given TWO (2) MONTHS from the mailing date of this decision to reply, correcting the below-noted deficiencies. Any reply should be entitled "Request for Reconsideration of Petition Under 37 CFR 1.47(a)", and should only address the deficiencies noted below, except that the reply may include an oath or declaration executed by the non-signing inventor. Failure to respond will result in abandonment of the application. Any extensions of time will be governed by 37 CFR 1.136(a).

The above-identified application was filed on February 19, 2003, without a fully executed oath or declaration. The Office mailed a Notice to File Missing Parts of Nonprovisional Application (hereinafter "Notice"), on April 3, 2003, requiring *inter alia*, an executed oath or declaration.

In response to the Notice, Applicant files the instant petition under 37 CFR 1.47(a), to allow inventor Laurent Favareille to proceed with the application on his own behalf and on behalf of inventors Christian Maini and Andreas Sahner. In support of the petition a Declaration by the Chief Executive Officer

("CEO") of C.D.M. Manufacturing NV ("CDM") is filed. The Declaration provides that the application and Declaration were mailed to the last known addresses of the inventors Christian Maini and Andreas Sahner. The Declaration further provides that inventor Maini signed an acknowledgement delivery form demonstrating receipt of the application. No copy of the acknowledgement delivery form has been located in the application file. The Declaration also states that a letter was received, signed by inventors Maini and Sahner, wherein they acknowledged receipt of a registered letter and also stating that they refuse to sign the documents. The Declaration states that a true copy of the letter is attached to the Declaration as Exhibit 5; however, no copy of the letter has been located in the application file.

Applicable Law

A grantable petition under 37 CFR 1.47(a) requires: (1) proof that the non-signing inventor cannot be reached or refuses to sign the oath or declaration after having been presented with the application papers (specification, claims and drawings); (2) an acceptable oath or declaration in compliance with 35 U.S.C. §§ 115 and 116; (3) the petition fee; and (4) a statement of the last known address of the non-signing inventor. Applicant lacks item (1).

As to item (1), if an inventor is unavailable (cannot be reached), a statement of facts should be submitted that fully describes the exact facts which are relied on to establish that a diligent effort was made to locate the inventor. *Copies of documentary evidence such as internet searches, certified mail return receipts, cover letters of instructions, telegrams, that support a finding that the nonsigning inventor could not be found or reached should be made part of the statement.*" (Emphasis supplied) *See*, MPEP § 409.03(d).

Further as to item (1), where an express refusal is alleged, [p]roof that a bona fide attempt was made to present a copy of the application papers (specification, including claims, drawings, and oath or declaration) to the nonsigning inventor for signature, but the inventor refused to accept delivery of the papers or expressly stated that the application papers should not be sent, may be sufficient. When there is an express written refusal, *a copy of the document evidencing that refusal*

must be made part of the statement of facts. (Emphasis supplied) *See*, MPEP § 409.03(d).

Applicant must provide copies of the acknowledgement delivery form and the registered letter[1].

Further correspondence with respect to this matter should be addressed as follows:

By mail: Commissioner for Patents
PO Box 1450
Alexandria, VA 22313-1450

By FAX: (703) 872-9306
Attn: Office of Petitions

By hand: 2201 South Clark Place
Customer Window
Crystal Plaza Two, Lobby Room 1B03
Arlington, VA 22202

Telephone inquiries concerning this decision should be directed to the undersigned at (703) 305-0014.

Derek L. Woods
Petitions Attorney
Office of Petitions

[1] These documents may be sent via facsimile to my attention.

UNITED STATES PATENT AND TRADEMARK OFFICE

COMMISSIONER FOR PATENTS
UNITED STATES PATENT AND TRADEMARK OFFICE
P.O. BOX 1450
ALEXANDRIA, VA 22313-1450
www.uspto.gov

Paper No. 12

CROWELL & MORING LLP
INTELLECTUAL PROPERTY GROUP
P.O. BOX 14300
Washington, DC 20044-4300

COPY MAILED

APR 0 7 2004

OFFICE OF PETITIONS

In re Application of:	:	CORRECTED DECISION
Christian Maini, Andreas Sahner	:	ON PETITION
and Laurent Favareille	:	
Application No. 10/367,960	:	
Filed: February 19, 2003	:	
Title of Invention: CONNECTOR	:	
SYSTEM	:	

This is in response to a petition under 37 CFR 1.47(a), filed October 3, 2003, to allow the other inventor(s) to proceed with the application on behalf of himself or herself and the nonsigning inventor.

The petition is **dismissed**.

Rule 47 applicant is given TWO (2) MONTHS from the mailing date of this decision to reply, correcting the below-noted deficiencies. Any reply should be entitled "Request for Reconsideration of Petition Under 37 CFR 1.47(a)", and should only address the deficiencies noted below, except that the reply may include an oath or declaration executed by the non-signing inventor. Failure to respond will result in abandonment of the application. Any extensions of time will be governed by 37 CFR 1.136(a).

The above-identified application was filed on February 19, 2003, without a fully executed oath or declaration. The Office mailed a Notice to File Missing Parts of Nonprovisional Application (hereinafter "Notice"), on April 3, 2003, requiring *inter alia*, an executed oath or declaration.

In response to the Notice, Applicant files the instant petition under 37 CFR 1.47(a), to allow inventor Laurent Favareille to proceed with the application on his own behalf and on behalf of inventors Christian Maini and Andreas Sahner. In support of the petition a Declaration by the Chief Executive Officer

("CEO") of C.D.M. Manufacturing NV ("CDM") is filed. The Declaration provides that the application and Declaration were mailed to the last known addresses of the inventors Christian Maini and Andreas Sahner. The Declaration further provides that inventor Maini signed an acknowledgement delivery form demonstrating receipt of the application. No copy of the acknowledgement delivery form has been located in the application file. The Declaration also states that a letter was received, signed by inventors Maini and Sahner, wherein they acknowledged receipt of a registered letter and also stating that they refuse to sign the documents. The Declaration states that a true copy of the letter is attached to the Declaration as Exhibit 5; however, no copy of the letter has been located in the application file.

Applicable Law

A grantable petition under 37 CFR 1.47(a) requires: (1) proof that the non-signing inventor cannot be reached or refuses to sign the oath or declaration after having been presented with the application papers (specification, claims and drawings); (2) an acceptable oath or declaration in compliance with 35 U.S.C. §§ 115 and 116; (3) the petition fee; and (4) a statement of the last known address of the non-signing inventor. Applicant lacks item (1).

As to item (1), if an inventor is unavailable (cannot be reached), a statement of facts should be submitted that fully describes the exact facts which are relied on to establish that a diligent effort was made to locate the inventor. *Copies of documentary evidence such as internet searches, certified mail return receipts, cover letters of instructions, telegrams, that support a finding that the nonsigning inventor could not be found or reached should be made part of the statement.*" (Emphasis supplied) *See*, MPEP § 409.03(d).

Further as to item (1), where an express refusal is alleged, [p]roof that a bona fide attempt was made to present a copy of the application papers (specification, including claims, drawings, and oath or declaration) to the nonsigning inventor for signature, but the inventor refused to accept delivery of the papers or expressly stated that the application papers should not be sent, may be sufficient. When there is an express written refusal, *a copy of the document evidencing that refusal*

must be made part of the statement of facts. (Emphasis supplied) *See*, MPEP § 409.03(d).

Applicant must provide copies of the acknowledgement delivery form and the registered letter[1].

Further correspondence with respect to this matter should be addressed as follows:

By mail: Commissioner for Patents
PO Box 1450
Alexandria, VA 22313-1450

By FAX: (703) 872-9306
Attn: Office of Petitions

By hand: 2201 South Clark Place
Customer Window
Crystal Plaza Two, Lobby Room 1B03
Arlington, VA 22202

Telephone inquiries concerning this decision should be directed to the undersigned at (703) 305-0014.

Derek L. Woods
Petitions Attorney
Office of Petitions

[1] These documents may be sent via facsimile to my attention.

UNITED STATES PATENT AND TRADEMARK OFFICE

Commissioner for Patents
United States Patent and Trademark Office
P.O. Box 1450
Alexandria, VA 22313-1450
www.uspto.gov

Paper No. 14

COPY MAILED

JUN 2 9 2004

OFFICE OF PETITIONS

CROWELL & MORING LLP
INTELLECTUAL PROPERTY GROUP
P.O. BOX 14300
SHELTON, CT 06484-8000

In re Application of: Christian Maini, Andreas Sahner and Laurent Favareille Application No. 10/367,960 Filed: February 19, 2003 Title of Invention: CONNECTOR SYSTEM	DECISION GRANTING STATUS UNDER 37 CFR 1.47(a)

This is in response to a Request for Reconsideration of Petition Under 37 CFR 1.47(a), filed June 7, 2004, to allow the other inventor(s) to proceed with the application on behalf of himself or herself and the nonsigning inventor.

The petition is **granted**.

The above-identified application and papers have been reviewed and found in compliance with 37 CFR 1.47(a). This application is hereby accorded Rule 1.47(a) status.

Petitioner has shown that the non-signing inventors, Christian Maini and Andreas Sahner, refuse to join in the application.

As provided in Rule 1.47(a), this Office will forward notice of this application's filing to the non-signing inventors at the addresses given in the Petition. Notice of the filing of this application will also be published in the Official Gazette.

The oath/declaration has been entered and made of record.

The application file is being returned to the Office of Initial Patent Examination for continued processing.

Telephone inquiries related to this decision may be directed to the undersigned at (703) 305-0014.

Derek L. Woods
Petitions Attorney
Office of Petitions

UNITED STATES PATENT AND TRADEMARK OFFICE

Commissioner for Patents
United States Patent and Trademark Office
P.O. Box 1450
Alexandria, VA 22313-1450
www.uspto.gov

MR. CHRISTIAN MAINI
ROUTE de CASTRES
F-81100 BURLATS
FRANCE

COPY MAILED
JUN 2 9 2004
OFFICE OF PETITIONS

In re Application of: Christian Maini, Andreas Sahner and Laurent Favareille Application No. 10/367,960 Filed: February 19, 2003 Title of Invention: CONNECTOR SYSTEM	:	LETTER

Dear Mr. Maini:

You are named as an inventor in the above-identified United States patent application filed under the provisions of 35 U.S.C. 116 (United States Code) and 37 CFR 1.47(b), Rules of Practice in Patent Cases. Should a patent be granted on the application you will be designated therein as a joint inventor.

As a named inventor you are entitled to inspect any paper in the file wrapper of the application, order copies of all or any part thereof (at a prepaid cost per 37 CFR 1.19) or make your position of record in the application. Alternatively, you may arrange to do any of the preceding through a registered patent attorney or agent presenting written authorization from you. If you care to join the application, counsel of record (see below) would presumably assist you. Joining in the application would entail the filing of an appropriate oath or declaration by you pursuant to 37 CFR 1.63.

Telephone inquiries regarding this communication should be directed to the undersigned at (703) 305-0014. Requests for information regarding your application should be directed to the File Information Unit at (703) 308-2733. Information regarding how to pay for and order a copy of the application, or a specific paper in the application, should be directed to Certification Division at (703) 308-9726 or 1-800-972-6382 (outside the Washington D.C. area).

Derek L. Woods
Petitions Attorney
Office of Petitions

cc: CROWELL & MORING LLP
INTELLECTUAL PROPERTY GROUP
P.O. BOX 14300
WASHINGTON, DC 20044-4300

UNITED STATES PATENT AND TRADEMARK OFFICE

Commissioner for Patents
United States Patent and Trademark Office
P.O. Box 1450
Alexandria, VA 22313-1450
www.uspto.gov

MR. ANDREAS SAHNER
RUE du COMMANDANT
FOESTRAETS LINSMEAU
B-1357 HELECINE
BELGIUM

COPY MAILED
JUN 2 9 2004
OFFICE OF PETITIONS

In re Application of:	:	
Christian Maini, Andreas Sahner	:	LETTER
and Laurent Favareille	:	
Application No. 10/367,960	:	
Filed: February 19, 2003	:	
Title of Invention: CONNECTOR	:	
SYSTEM	:	

Dear Mr. Sahner:

You are named as an inventor in the above-identified United States patent application filed under the provisions of 35 U.S.C. 116 (United States Code) and 37 CFR 1.47(b), Rules of Practice in Patent Cases. Should a patent be granted on the application you will be designated therein as a joint inventor.

As a named inventor you are entitled to inspect any paper in the file wrapper of the application, order copies of all or any part thereof (at a prepaid cost per 37 CFR 1.19) or make your position of record in the application. Alternatively, you may arrange to do any of the preceding through a registered patent attorney or agent presenting written authorization from you. If you care to join the application, counsel of record (see below) would presumably assist you. Joining in the application would entail the filing of an appropriate oath or declaration by you pursuant to 37 CFR 1.63.

Telephone inquiries regarding this communication should be directed to the undersigned at (703) 305-0014. Requests for information regarding your application should be directed to the File Information Unit at (703) 308-2733. Information regarding how to pay for and order a copy of the application, or a specific paper in the application, should be directed to Certification Division at (703) 308-9726 or 1-800-972-6382 (outside the Washington D.C. area).

Derek L. Woods
Petitions Attorney
Office of Petitions

cc: CROWELL & MORING LLP
INTELLECTUAL PROPERTY GROUP
P.O. BOX 14300
WASHINGTON, DC 20044-4300

UNITED STATES PATENT AND TRADEMARK OFFICE

Commissioner for Patents
United States Patent and Trademark Office
P.O. Box 1450
Alexandria, VA 22313-1450
www.uspto.gov

DARBY & DARBY, P.C.
P. O. BOX 5257
NEW YORK, NY 10150-5257

COPY MAILED
SEP 18 2006
OFFICE OF PETITIONS

In re Application of	:	
Raymond Berthiaume	:	
Application No. 10/367,990	:	ON PETITION
Filed: February 14, 2003	:	
Attorney Docket No. 04585/000M602-US0	:	

This is a decision on the petition under 37 CFR 1.137(b), filed May 1, 2006, to revive the above-identified application.

The application became abandoned for failure to reply in a timely manner to the Restriction Requirement mailed September 8, 2005. A Notice of Abandonment was mailed on March 17, 2006.

The petition satisfies the requirements of 37 CFR 1.137(b) in that petitioner has supplied (1) the reply in the form of an Election; (2) the petition fee of $750; and (3) an adequate statement of unintentional delay. Therefore, the petition is **GRANTED**.

The application file is being referred to Technology Center Art Unit 3724.

Telephone inquiries concerning this decision should be directed to the undersigned at (571) 272-3226.

Andrea Smith
Petitions Examiner
Office of Petitions

IN THE UNITED STATES PATENT AND TRADEMARK OFFICE

OIPE JC139
JUN 30 2003
PATENT & TRADEMARK OFFICE

In re Applicant:	§	
HALAHMI Erez	§	
Serial No.: 10/367,995	§	Group Art Unit
Filed: 19 February 2003	§	
For: Virtual Mailbox	§	Attorney Docket: 25763

Commissioner for Patents
P.O. Box 1450
Alexandria, VA 22313-1450

PETITION TO ADD INVENTOR UNDER 37 CFR 1.48(a)

Sir:

This is Petition to add inventors to a pending patent application, pursuant to 37 CFR 1.48(a), for which a fee of $ 130.00 is due. Please charge my Deposit Account 50-1407 for this fee, as well as any additional fees due. A duplicate of this Petition is included for this purpose.

The above-identified patent application, as filed, included one inventor, Erez HALAHMI. By error, without deceptive intent, the names of three additional inventors, Eran FUCHS, Ariel YALOZ and Keren KROGLEN, were left out. Statements and Declarations setting forth these facts are attached herewith, along with the Declarations of all the inventors. Consequently, please add Eran FUCHS, Ariel YALOZ and Keren KROGLEN as inventors to the above-identified patent application.

Respectfully submitted,

Sol Sheinbein
Registration No. 25,457

Dated: 29 June 2003

SPE RESPONSE FOR CERTIFICATE OF CORRECTION

DATE : 3-11-05 Pape

TO SPE OF : ART UNIT 3658

SUBJECT : Request for Certificate of Correction on Patent No.: 6817607

A response is requested with respect to the accompanying request for a certificate of co

Please complete this form and return with file, within 7 days to:
Certificates of Correction Branch - PK 3-915
Palm location 7580 - Tel. No. 305-8309

With respect to the change(s) requested, correcting Office and/or Applicant's errors, sho patent read as shown in the certificate of correction? No new matter should be introduced, r the scope or meaning of the claims be changed.

Can this be approved

Thank You For Your Assistance

Certificates of Correction

The request for issuing the above-identified correction(s) is hereby:
Note your decision on the appropriate box.

- [x] Approved — All changes apply.
- [ ] Approved in Part — Specify below which changes do not
- [ ] Denied — State the reasons for denial below.

Comments:

PATRICK MACKEY
SUPERVISORY PATENT EXAMINER
TECHNOLOGY CENTER 3600

SPE

PTOL-306 (REV. 7/03)

U.S. DEPARTMENT OF COMMERCE Patent and

UNITED STATES PATENT AND TRADEMARK OFFICE

COMMISSIONER FOR PATENTS
UNITED STATES PATENT AND TRADEMARK OFFICE
P.O. BOX 1450
ALEXANDRIA, VA 22313-1450
www.uspto.gov

TYLER BROWN
CIENA CORPORATION
1201 WINTERSON ROAD
LINTHICUM, MD 21090

COPY MAILED

NOV 02 2005

OFFICE OF PETITIONS

In re Application of	:	
James E. DeGrange Jr. et al.	:	
Application No. 10/368,031	:	DECISION ON PETITION
Filed: February 14, 2003	:	37 CFR 1.137(b)
Attorney Docket No. 4450-0353P	:	

This is a decision on the petition under 37 CFR §1.137(b), filed June 10, 2005, to revive the above-identified application.

The petition is **GRANTED**.

This application became abandoned, by operation of law, for failure to timely reply within the three month shortened statutory period set in the non-final Office Action mailed September 9, 2004. No extensions of time have been obtained pursuant to the provisions of 37 CFR §1.136(a). The date of abandonment of this application is December 10, 2004.

The petition satisfies the conditions for revival pursuant to the provisions of 37 CFR §1.137(b) in that (1) the reply (amendment); (2) the petition fee of $1500.00 (for a large entity); and (3) the required statement of unintentional delay have been received. Accordingly, the reply to the non-final Office Action mailed September 9, 2004 is accepted as having been unintentionally delayed.

While a courtesy copy of this decision is being mailed to the address of the person signing the instant petition, all future correspondence will be directed to the address currently of record until such time as appropriate instructions are received to the contrary.

Telephone inquiries concerning this decision should be directed to Angela Ortiz at (571) 272-6051, or in her absence, the undersigned at (571) 272-3217.

This matter is being referred to Technology Center AU 3663 for appropriate action on the concurrently filed amendment.

Brian Hearn
Petitions Examiner
Office of Petitions

Cc: MICHAEL R. CAMMARATA
BIRCH, STEWART, KOLASCH & BIRCH, LLP
8110 GATEHOUSE ROAD
SUITE 100 EAST
P.O. BOX 747
FALLS CHURCH, VIRGINIA 22040-0747

UNITED STATES PATENT AND TRADEMARK OFFICE

JUL 12 2007

Commissioner for Patents
United States Patent and Trademark Office
P.O. Box 1450
Alexandria, VA 22313-1450
www.uspto.gov

MARTIN D. MOYNIHAN
PRTSI, INC.
P. O. BOX 16446
ARLINGTON VA 22215

In re Application of	:
Michael Amit et al	:
Serial No.: 10/368,045	: PETITION DECISION
Filed: February 19, 2003	:
Attorney Docket No.: 25158	:

This is a decision on the PETITION FOR ACCEPTANCE OF COLOR DRAWINGS UNDER 37 CFR 1.84(a)(2). The petition was filed June 1, 2007. Entry of color drawings requires: 1) three sets of the color drawings, 2) a proper amendment to the specification indicating color photographs or drawings are present in the file, and 3) the required fee under 37 CFR 1.17(h).

A review of the application record indicates that the petition meets all of the requirements for acceptance of color drawings. This is not to be construed that all of the drawings are accepted, only that the color drawings are acceptable.

The petition is **GRANTED**.

Should there be any questions with respect to this decision, please contact William R. Dixon, Jr., by mail addressed to: Director, Technology Center 1600, at the address listed above, or by telephone at 571-272-0519 or by facsimile transmission at 571-273-8300.

William R. Dixon, Jr.
Special Program Examiner
Technology Center 1600

UNITED STATES PATENT AND TRADEMARK OFFICE

COMMISSIONER FOR PATENTS
UNITED STATES PATENT AND TRADEMARK OFFICE
P.O. BOX 1450
ALEXANDRIA, VA 22313-1450
WWW.USPTO.GOV

Paper No. 4

DRINKER BIDDLE & REATH
ONE LOGAN SQUARE
18TH AND CHERRY STREETS
PHILADELPHIA PA 19103-6996

COPY MAILED

JUN 16 2003

OFFICE OF PETITIONS

In re Application of
Robinson, et al.
Application No.: 10/368,046
Filed: February 14, 2003
Attorney Docket No. 44149-3US1
For: METHOD FOR ISOLATION AND PURIFICATION OF EXPRESSED GENE PRODUCTS IN VITRO

: DECISION GRANTING
: PETITION

This is a decision on the petition under 37 CFR 1.10(c), filed April 21, 2003 (certificate of mailing date April 14, 2003), requesting that the above-identified application be accorded a filing date of February 14, 2003, instead of the presently accorded date of February 15, 2003.

Petitioners allege that the application was deposited in "Express Mail" service with the U. S. Postal Service, on February 14, 2003. In support, petitioners provided a copy of the Express Mail label, receipt no. EL901244661US, showing a Date-In of February 15, 2003 and a USPS date stamp of "FEB 14 2003". Express Mail label, receipt no. EL901244661US is listed on the original Utility Patent Application Transmittal found in the application file. Petitioners request that the application be accorded a filing date of February 14, 2003.

In view of the above, the evidence is convincing that the application was deposited as "Express Mail" with the US Postal Service on February 14, 2003.

In view of the above, the petition is granted.

As this is a feeless petition, no petition fee has been or will be charged.

Thereafter, the application will be returned to the Office of Initial Patent Examination for further processing with a filing date of **February 14, 2003.**

Telephone inquiries concerning this matter should be directed to the undersigned at (703)308-6712.

E. Shirene Willis
Senior Petitions Attorney
Office of Petitions

UNITED STATES PATENT AND TRADEMARK OFFICE

OFFICE

COPY MAILED

MAR 1 5 2006

Director's Office
Office of Patent Publication

ROBERT C. MUIS
2442 SOUTH RIDGE AVE.
BULLHEAD CITY, AZ 86429

In re Application of
MUIS, ROBERT CHRIS, et al. :
Application No. 10/368,077 : **DECISION ON PETITION**
Filed: February 20, 2003 :

This is a decision on the Petition To Withdraw Abandonment, received in the United States Patent and Trademark Office (USPTO) on February 28, 2006.

The petition is **DISMISSED.** Any request for reconsideration of this decision, or as explained below, filing a petition seeking revival under 37 CFR § 1.137, must be filed within TWO MONTHS (2) from the mail date of this decision.

The application was held abandoned for applicant's failure to timely pay the required issue fee and publication fee, as required in the Notice Allowance and Fee(s) Due mailed October 17, 2005, which set a three (3) month statutory period for reply. The Notice of Abandonment was mailed on February 21, 2006.

Petitioner states that the fees were mailed to the USPTO on January 10 and received on January 19, 2006. In support of this assertion Petitioner has submitted a copy of the USPC label record.

In order for a petition to be granted, the evidence must be sufficient according to one of the following standards:

MPEP 503 (postcard receipt as prima facie evidence)
Certificate of Mailing under 37 CFR 1.8(b)
"Express Mail" Mailing under 37 CFR 1.10

MPEP 503 states the following:

A postcard receipt which itemizes and properly identifies the items which are being filed serves as *prima facie* evidence of receipt in the USPTO of all items listed thereon on the date stamped thereon by the USPTO.

Unfortunately MPEP 503 is not applicable since there is no record of receipt of the Return Receipt Postcard, which if received in the Office would have been stamped (referred to as "Office Date" stamp) acknowledging receipt of the items identified thereon.

Provisions under 37 CFR 1.8(b) requires that the petitioner (1) promptly inform the Office of the previous timely mailing or transmission after becoming aware that the Office has no evidence of receipt of the correspondence, (2) supply copies of the previously mailed correspondence with certificate of mailing thereon, and (3) include a statement which attests to the previous timely mailing.

Petitioner does not satisfy requirement under 37 CFR 1.8(b)(2) in that a copy of the previously mailed correspondence (Fee(s) Transmittal, Form PTOL 85B) did not include a certificate of mailing, and therefore, does not receive the benefits of 37 CFR 1.8, and (3) in that an attesting statement was not provided.

37 CFR § 1.10 is not applicable since this procedure was not used.

The holding of abandonment cannot be withdrawn as this time.

Although this petition for withdrawal of the holding of abandonment has been dismissed, other petition remedies are available for bringing about the withdrawal of the holding of abandonment.

File a petition for Revival of Abandoned Application under CFR §1.137 (a) or (b). Forms are available at USPTO website http://www.uspto.gov

- Under 37 CFR 1.13(a), a petition for the revival of an ***unavoidably*** abandoned
- Under 37 CFR 1.137(b), a petition for the revival of an ***unintentionally*** abandoned

Further correspondence with respect to the petition for revival under 37 CFR 1.137 should be directed to the Office Of Petition at 571-272-3282 or addressed as follows:

By mail: Commissioner for Patents
P O Box 1450
Mail Stop Petitions
Alexandria, VA 22313-1450

Telephone inquires concerning this decision may be directed to the undersigned at 703-308-9250.

Thomas E Hawkins

Thomas E. Hawkins
Paralegal Specialist
Office of the Director
Office of Patent Publications

UNITED STATES PATENT AND TRADEMARK OFFICE

Commissioner for Patents
United States Patent and Trademark Office
P.O. Box 1450
Alexandria, VA 22313-1450
www.uspto.gov

JJGJR.: 06-06

Paper No: __

ROBERT C. MUIS
2442 SOUTH RIDGE AVE.
BULLHEAD CITY AZ 86429

COPY MAILED

JUL 1 0 2006

OFFICE OF PETITIONS

In re Application of :
Muis, et al. :
Application No.: 10/368,077 :
Filing Date: 20 February, 2003 :
Attorney Docket No. (None) :

DECISION

This is a decision on the petition filed on 4 April, 2006, to revive the application under 37 C.F.R. §1.137(b), as having as abandoned due to unintentional delay.

For the reasons set forth below the petition under 37 C.F.R. §1.137(b) is **GRANTED**.

BACKGROUND

The record reflects that:

- Petitioner failed to reply timely and properly to the Notice of Allowance/Allowability and Fees Due mailed on 17 October, 2005, with reply due under a non-extendable deadline on or before 17 January, 2006;
- the instant application went abandoned after midnight 17 January, 2006;
- the Office mailed the Notice of Abandonment on 21 February, 2006;
- the 28 February, 2006, request to withdraw the holding of abandonment was dismissed on 15 March, 2006, for failing to satisfy the showing requirement;
- on 4 April, 2006, Petitioner filed the instant petition (with fee) under 37 C.F.R. §1.137(b),

evidenced the filing of the reply in the form of fees due (though untimely because Petitioner failed to submit the reply with the available certificate of mailing/tansmission under 37 C.F.R. §1.8) on 19 January, 2006, and made the statement of unintentional delay–thus, Petitioner appears to have satisfied the requirements under the regulation;

- out of an abundance of caution, Petitioners always are reminded that each request to the Office must be filed as a separate paper (see: 37 C.F.R. §1.4(c)), and those registered to practice *and* all others who make representations before the Office are reminded to inquire into the underlying facts of representations made to the Office and support averments with the appropriate documentation–since all owe to the Office the continuing duty to disclose.[1]

---

[1] See supplement of 17 June, 1999. The Patent and Trademark Office is relying on petitioner's duty of candor and good faith and accepting a statement made by Petitioner. See Changes to Patent Practice and Procedure, 62 Fed. Reg. at 53160 and 53178, 1203 Off. Gaz. Pat. Office at 88 and 103 (responses to comments 64 and 109)(applicant obligated under 37 C.F.R. §10.18 to inquire into the underlying facts and circumstances when providing statements to the Patent and Trademark Office).

Specifically, the regulations at 37 C.F.R. §10.18 provide:

§ 10.18 Signature and certificate for correspondence filed in the Patent and Trademark Office.
(a) For all documents filed in the Office in patent, trademark, and other non-patent matters, except for correspondence that is required to be signed by the applicant or party, each piece of correspondence filed by a practitioner in the Patent and Trademark Office must bear a signature by such practitioner complying with the provisions of §1.4(d), §1.4(e), or § 2.193(c)(1) of this chapter.
(b) By presenting to the Office (whether by signing, filing, submitting, or later advocating) any paper, the party presenting such paper, whether a practitioner or non-practitioner, is certifying that—

(1) All statements made therein of the party's own knowledge are true, all statements made therein on information and belief are believed to be true, and all statements made therein are made with the knowledge that whoever, in any matter within the jurisdiction of the Patent and Trademark Office, knowingly and willfully falsifies, conceals, or covers up by any trick, scheme, or device a material fact, or makes any false, fictitious or fraudulent statements or representations, or makes or uses any false writing or document knowing the same to contain any false, fictitious or fraudulent statement or entry, shall be subject to the penalties set forth under 18 U.S.C. 1001, and that violations of this paragraph may jeopardize the validity of the application or document, or the validity or enforceability of any patent, trademark registration, or certificate resulting therefrom; and

(2) To the best of the party's knowledge, information and belief, formed after an inquiry reasonable under the circumstances, that —

(i) The paper is not being presented for any improper purpose, such as to harass someone or to cause unnecessary delay or needless increase in the cost of prosecution before the Office;

(ii) The claims and other legal contentions therein are warranted by existing law or by a nonfrivolous argument for the extension, modification, or reversal of existing law or the establishment of new law;

(iii) The allegations and other factual contentions have evidentiary support or, if specifically so identified, are likely to have evidentiary support after a reasonable opportunity for further investigation or discovery; and

(iv) The denials of factual contentions are warranted on the evidence, or if specifically so identified, are reasonably based on a lack of information or belief.

(c) Violations of paragraph (b)(1) of this section by a practitioner or non-practitioner may jeopardize the validity of the application or document, or the validity or enforceability of any patent, trademark registration, or certificate resulting therefrom. Violations of any of paragraphs (b)(2)(i) through (iv) of this section are, after notice and reasonable opportunity to respond, subject to such sanctions as deemed appropriate by the Commissioner, or the Commissioner's designee, which may include, but are not limited to, any combination of —

(1) Holding certain facts to have been established;
(2) Returning papers;
(3) Precluding a party from filing a paper, or presenting or contesting an issue;
(4) Imposing a monetary sanction;
(5) Requiring a terminal disclaimer for the period of the delay; or
(6) Terminating the proceedings in the Patent and Trademark Office.

(d) Any practitioner violating the provisions of this section may also be subject to disciplinary action. See § 10.23(c)(15).
[Added 50 FR 5175, Feb. 6, 1985, effective Mar. 8, 1985; para. (a) revised, 58 FR 54494, Oct. 22, 1993, effective Nov. 22, 1993; paras. (a) & (b) revised, paras. (c) & (d) added, 62 FR 53131, Oct. 10, 1997, effective Dec. 1, 1997; para. (a) revised, 69 FR 56481, Sept. 21, 2004, effective Oct. 21, 2004]

Petitioner failed to utilize the provisions of, for example, 37 C.F.R. §1.8 (see: http://www.uspto.gov/web/offices/pac/mpep/documents/appxr_1_8.htm#cfr37s1.8) for FAX or First Class Mail transmittal or §1.10 (see: http://www.uspto.gov/web/offices/pac/mpep/documents/appxr_1_10.htm#cfr37s1.10) for Express Mail transmittal, respectively.

Statutes and the Rules of Practice (e.g., 37 C.F.R. §1.8 and §1.10) provide many avenues for action and methods of protection for applicants, patentees, assignees, practitioners and others to accomplish tasks before the Office. However, persons who fail to utilize those statutes and rules fail to succeed in their tasks or obtain those protections.

STATUTES, REGULATIONS AND ANALYSIS

Congress has authorized the Commissioner to "revive an application if the delay is shown to the satisfaction of the Commissioner to have been "unavoidable." 35 U.S.C. §133 (1994).[2]

The regulations at 37 C.F.R. §1.137(a) and (b) set forth the requirements for a petitioner to revive a previously unavoidably or unintentionally, respectively, abandoned application under this congressional grant of authority. The language of 35 U.S.C. §133 and 37 C.F.R. §1.137(a) is clear, unambiguous, and without qualification: the delay in tendering the reply to the outstanding Office action, as well as filing the first petition seeking revival, must have been unavoidable for the reply now to be accepted on petition.[3]

Delays in responding properly raise the question whether delays are unavoidable.[4] Where there is a question whether the delay was unavoidable, Petitioners must meet the burden of establishing that the delay was unavoidable within the meaning of 35 U.S.C. §133 and 37 C.F.R. §1.137(a).[5]

---

[2] 35 U.S.C. §133 provides:
35 U.S.C. §133 Time for prosecuting application.
Upon failure of the applicant to prosecute the application within six months after any action therein, of which notice has been given or mailed to the applicant, or within such shorter time, not less than thirty days, as fixed by the Commissioner in such action, the application shall be regarded as abandoned by the parties thereto, unless it be shown to the satisfaction of the Commissioner that such delay was unavoidable.

[3] Therefore, by example, an unavoidable delay in the payment of the Filing Fee might occur if a reply is shipped by the US Postal Service, but due to catastrophic accident, the delivery is not made.

[4] See: *Changes to Patent Practice and Procedure*; *Final Rule Notice*, 62 *Fed. Reg.* at 53158-59 (October 10, 1997), 1203 *Off. Gaz. Pat. Office* at 86-87 (October 21, 1997).

[5] See: In re Application of G, 11 USPQ2d 1378, 1380 (Comm'r Pats. 1989).

And the Petitioner must be diligent in attending to the matter.[6] Failure to do so does not constitute the care required under Pratt, and so cannot satisfy the test for diligence and due care.

(By contrast, unintentional delays are those that do not satisfy the very strict statutory and regulatory requirements of unavoidable delay, and also, by definition, are not intentional.[7]))

Allegations as to
Unintentional Delay

The requirements for a grantable petition under 37 C.F.R. §1.137(b) are the petition and fee, a statement/showing of unintentional delay, a proper reply, and–where appropriate--a terminal disclaimer and fee.

The requirements for relief under the provisions of 37 C.F.R. §1.137(b) are: petition, fee, reply, showing of unintentional delay, and–where appropriate–a terminal disclaimer and fee.

It appears that Petitioner has satisfied the requirements of the regulation.

CONCLUSION

Because Petitioner has satisfied the regulatory requirements the petition is **granted**.

The application is released to Publications Branch to be processed into a patent in due course.

Telephone inquiries concerning this decision may be directed to the undersigned at (571) 272-3214.

John J. Gillon, Jr.
Senior Attorney
Office of Petitions

---

[6] See: Diligence in Filing Petitions to Revive and Petitions to Withdraw the Holding of Abandonment, 1124 Off. Gaz. Pat. Office 33 (March 19, 1991). It was and is Petitioner's burden to exercise diligence in seeking either to have the holding of abandonment withdrawn or the application revived. See 1124 Off. Gaz. Pat. Office supra.

[7] Therefore, by example, an unintentional delay in the reply might occur if the reply and transmittal form are to be prepared for shipment by the US Postal Service, but other pressing matters distract one's attention and the mail is not timely deposited for shipment.

UNITED STATES PATENT AND TRADEMARK OFFICE

COMMISSIONER FOR PATENTS
UNITED STATES PATENT AND TRADEMARK OFFICE
P.O. BOX 1450
ALEXANDRIA, VA 22313-1450
WWW.USPTO.GOV

Paper No. 7

COPY MAILED

JUN 1 2 2003

OFFICE OF PETITIONS

FISH & NEAVE
1251 AVENUE OF THE AMERICAS
50TH FLOOR
NEW YORK NY 10020-1105

In re Application of
Zou
Application No. 10/368,089
Filed: February 13, 2003
Attorney Docket No. LT-132 CONT.
For: METHODS AND APPARATUS FOR POWER MEASURING RECEIVER

: DECISION GRANTING
: PETITION

This is a decision on the petition under 37 CFR 1.10(c), filed June 2, 2003 (certificate of mailing date May 28, 2003), requesting that the above-identified application be accorded a filing date of February 13, 2003 rather than the presently accorded filing date of February 15, 2003.

Petitioner requests the earlier filing date on the basis that the application was deposited in Express Mail service of the United States Postal Service (USPS) on February 13, 2003, pursuant to the requirements of 37 CFR 1.10. The petition is accompanied by a copy of Express Mail label no. EV133104200US showing a "date-in" of 2/13/03 **and** a USPS date stamp of FEB 13, 2003. The same Express Mail label number is listed on the TRANSMITTAL LETTER FOR RULE 53(b) CONTINUING PATENT APPLICATION found in the application file and resubmitted with the instant petition.

The evidence presented establishes that the Express Mail package associated with Express Mail label no. EV133104200US was deposited with the USPS on February 13, 2003.

Accordingly, the petition is granted.

No fee has been or will be charged in connection with this petition.

The application is being returned to the Office of Initial Patent Examination for correction of the filing date to **February 13, 2003**.

Any inquiries related to this decision should be directed to the undersigned at (703) 308-6712.

E. Shirene Willis

E. Shirene Willis
Senior Petitions Attorney
Office of Petitions

UNITED STATES PATENT AND TRADEMARK OFFICE

MAR 16 2005

COMMISSIONER FOR PATENTS
UNITED STATES PATENT AND TRADEMARK OFFICE
P.O. BOX 1450
ALEXANDRIA, VA 22313-1450
www.uspto.gov

MAILED

MAR 16 2005

OFFICE OF THE DIRECTOR
TC 3600

TAROLLI, SUNDHEIM, COVELL & TUMMINO L.L.P.
526 Superior Avenue, Suite 1111
Cleveland, OH 44114

In re Application of
Tom Kish et al
Application No. 10/368,105
Filed: February 18, 2003
For: APPARATUS FOR USE IN APPLYING GRANULAR MATERIAL TO A RAIL

DECISION ON PETITION TO WITHDRAW THE HOLDING OF ABANDONMENT

This is in reply to the petition to withdraw the holding of abandonment under 37 CFR 1.181, filed in the United States Patent and Trademark Office, on January 21, 2005.

The petition is **GRANTED** in view of the following evidence of timely filing :

☒ Postcard receipt being dated August 18, 2004.

☐ USPTO return facsimile receipt dated _____ which identifies the application by serial number and the type of Response that was filed on that date.

☐ Certificate of Mailing/Transmission signed on _____ and supported by a statement under 37 C.F.R. 1.8(b)(3).

☐ Hand Delivery Receipt of the specific documents submitted dated _____.

☐ Certificate of Transmission of CPA under 37 C.F.R. 1.6 filed on _____.

☐ Express Mail Receipt under 37 C.F.R. 1.10 dated _____.

This application is being forwarded to the Supervisory Legal Instruments Examiner for entry of the Amendment filed with the petition, then to the examiner for prompt action on the response.

KJD/jwk: 3/9/05

KENNETH J. DORNER
SPECIAL PROGRAMS EXAMINER
TECHNOLOGY CENTER 3600

UNITED STATES PATENT AND TRADEMARK OFFICE

Commissioner for Patents
United States Patent and Trademark Office
P.O. Box 1450
Alexandria, VA 22313-1450
www.uspto.gov

John C. Malloy
116
100 Edgewater Dr
Miami, FL 33133

COPY MAILED

MAR 2 9 2005

OFFICE OF PETITIONS

In re Application of
Knepp
Application No. 10/368,107
Filed: February 15, 2003
For: Concrete Ingredient Delivery Truck . . .

Decision on Petition

This is a decision on the petition under 37 CFR 1.137(a), filed December 8, 2004, to revive the above-identified application.

The petition is **DISMISSED**.

Any request for reconsideration must be submitted within TWO (2) MONTHS from the mail date of this decision. Extensions of time under 37 CFR 1.136(a) are permitted. Any reconsideration request should include a cover letter entitled "Renewed Petition under 37 CFR 1.137(a)." This is **not** a final agency action within the meaning of 5 U.S.C. § 704.

The merits of a petition will only be considered after the submission of the full petition fee. Effective November 1, 2004, the fee required for a petition under 37 CFR 1.137(a) was raised to $250 for a small entity.[1] Petitioner has only submitted $75. Therefore, the merits of the petition will not be considered until an additional $175 is submitted to the Office.

Although the $75 will not be refunded, petitioner may request that it be applied towards any future request for reconsideration under 37 CFR 1.137(a). In the alternative, petitioner may wish to file a petition under 37 CFR 1.137(b) and request the $75 be applied towards the $750 fee for the petition.

The petition bears an application number of 10/386,107. Petitioner should note the correct application number is 10/368,107.

Further correspondence with respect to this matter should be addressed as follows:

By mail: Mail Stop Petition
Commissioner for Patents
P.O. Box 1450
Alexandria, VA 22313-1450

By facsimile: (703) 872-9306
Attn: Office of Petitions

---

[1] See Revision of Patent Fees for Fiscal Year 2005, 69 Fed. Reg. 52604 (Aug. 27, 2004) and Changes to Support Implementation of the United States Patent and Trademark Office 21st Century Strategic Plan, 1287 Off. Gaz. Pat. Office 67 (Oct. 12, 2004).

If a request for reconsideration is filed, and a decision on the new petition is not received within three months, petitioner may wish to call the number below to check on the status of the renewed petition.

Telephone inquiries should be directed to Petitions Attorney Steven Brantley at (571) 272-3203.

Charles Steven Brantley
Petitions Attorney
Office of Petitions

UNITED STATES PATENT AND TRADEMARK OFFICE

Commissioner for Patents
United States Patent and Trademark Office
P.O. Box 1450
Alexandria, VA 22313-1450
www.uspto.gov

THOMAS R. FITZGERALD
16 E. MAIN STREET, SUITE 210
ROCHESTER NY 14614-1808

COPY MAILED

NOV 1 7 2005

OFFICE OF PETITIONS

In re Application of
Darrell Knepp
Application No. 10/368,107
Filed: February 15, 2003
Title of Invention: CONCRETE INGREDIENT DELIVERY TRUCK HAVING A MIXING MEANS AND A FIBER STRAND CHOPPING DEVICE FOR MIXING CONCRETE INGREDIENTS AND SHORT FIBER STRAND LENGHTS AT A JOB SITE AND DEPOSITING THE MIXTURE

DECISION ON PETITION

This is a decision on the petition under 37 CFR §1.137(b), May 13, 2005, to revive the above-identified application.

This above-identified application became abandoned for failure to file a response to a Notice to File Corrected Application Papers which was mailed on April 10, 2003. The Notice to File Corrected Application Papers set an extendable two (2) month period for reply. No timely request for extension of time was obtained under the provisions of 37 CFR §1.136(a). Accordingly, this application became abandoned on June 11, 2003. A Notice of Abandonment was mailed on February 9, 2004.

The requirements for a grantable petition under 37 CFR §1.137(b) have been met. This petition is hereby **Granted**.

The Office acknowledges receipt of the replacement drawings.

This application is being forwarded to the Office of Initial Patent Examination for further processing of the application.

Telephone inquiries concerning this matter should be directed to the undersigned at (571) 272-3215.

Charlema R. Grant

Charlema R. Grant
Petitions Attorney
Office of Petitions

UNITED STATES PATENT AND TRADEMARK OFFICE

Commissioner for Patents
United States Patent and Trademark Office
P.O. Box 1450
Alexandria, VA 22313-1450
www.uspto.gov

COPY MAILED

APR 0 5 2006

OFFICE OF PETITIONS

THOMAS R. FITZGERALD
16 E. MAIN STREET, SUITE 210
ROCHESTER, NY 14614-1808

In re Application of Knepp :
Application No. 10/368,107 : Decision on Petition
Filing Date: February 15, 2003 :
Attorney Docket No. 3016184 :

This decision is in response to the January 31, 2006, petition requesting a refund of $1,000 in fees.

The petition is **dismissed**.

Facts:

A Notice to File Corrected Application Papers was mailed to applicant on April 10, 2003.

A response was not timely received. As a result, the application became abandoned on July 11, 2003.

A Notice of Abandonment was mailed on February 9, 2004.

Petitioner did not file a petition to withdraw the holding of abandonment upon receiving the Notice of Abandonment. Instead, petitioner filed a petition petition under 37 CFR 1.137(a) on December 8, 2004, along with only $75 for the petition fee due of $250. The merits of the petition were not considered since the full petition fee was not paid. The decision on the petition stated petitioner might wish to file a petition under 37 CFR 1.137(b) rather than 37 CFR 1.137(a) and request the $75 be applied towards the $750 petition fee.

On May 13, 2005, petitioner filed a petition under 37 CFR 1.137(b). Petitioner paid $175 and $675 on May 13, 2005. The Office was unable to apply the $75 prior payment to both fees. The Office either had enough money for the 37 CFR 1.137(a) or the 37 CFR 1.137(b) petition. The Office considered the petition under 37 CFR 1.137(b). The $75 was applied to the $675 payment and the Office refunded the $175.

On December 28, 2005, the Office mailed a Notice entitled, "Withdrawal of Previously Sent Notice." The new Notice stated, "The Notice of Abandonment mailed on February 2, 2004 was sent in error and is hereby withdrawn." The new Notice is unsigned.

Petitioner received the Withdrawal Notice on or before January 6, 2006.

A decision granting the petition under 37 CFR 1.137(b) was mailed on January 31, 2006.

Discussion:

The Office acted correctly in considering a petition to revive if the application was in fact abandoned as a matter of law.

The record as of January 31, 2006, failed to establish a reply was timely filed in response to the April 10, 2003. The postcard receipt filed with the instant petition was not previously filed.

The unsigned Withdrawal Notice mailed December 28, 2005, was obviously mailed in error and is hereby vacated.

Upon a determination that the application was abandoned, the Office had to determine which petition should be considered. The total of $925 submitted by petitioner was insufficient for both the 37 CFR 1.137(a) fee and the 37 CFR 1.137(b) fee.

The only petition filed on May 13, 2005, was the petition under 37 CFR 1.137(b). The May 13, 2005 papers did not request reconsideration of the petition under 37 CFR 1.137(a). The May 13, 2005 transmittal sheet stated,

> Applicant previously paid $75.00 in petition fees. The Petitions Examiner indicated that payment may be applied to this petition. Applicant elects to apply his prior payment of $75.00 to this petition and a check for the balance is enclosed. (emphasis added).

The term "this petition" clearly appears to refer to the petition being filed with the transmittal sheet and the fee payment which was the petition under 37 CFR 1.137(b).

The Office acted correctly in applying the $675 to the fee for the petition under 37 CFR 1.137(b) and refunding the $175.

The Office acted correctly in granting the petition under 37 CFR 1.137(b) since all the criteria under 37 CFR 1.137(b) had been met.

Even if equity warranted a refund of the fee, the Office could not refund the petition fee. The use of the word "shall" in 35 U.S.C. 41 requires the Office to charge the petition fee. Once the fee has been "charge[d]" and the petition considered, the Office does not have the authority to refund the fee except under 35 U.S.C. 42.

35 U.S.C. 42(d) states, "The Director may refund any fee paid by mistake or any amount paid in excess of that required."

Petitioner intentionally submitted the petition fee on May 13, 2005. The fee was not accidentally paid for another application. Petitioner intentionally filed the petition and fee in the instant application. The payment of the petition fee was not a payment of a fee made by mistake.

It should be noted that a petition fee is a condition precedent for the consideration of the petition. The fee is not for the revival of the application but only for consideration of the petition. Once the petition has been considered, the Office has supplied the service requested. Subsequent facts or arguments cannot retroactively make a fee valid at the time it was received into a "fee paid by mistake."

In 1936, the Comptroller General[1] directed the USPTO not to refund petition fees once a petition has been considered. At that time, applications could not be revived if abandoned as a result of the failure to pay the final fee after allowance. Despite this fact, many applicants would file petitions to revive in such circumstances. The Office would either dismiss these petitions for lack of jurisdiction or inform petitioner applications abandoned for failure to pay the final fee cannot be revived. The court determined that the fee was not refundable under the provision of the Appropriation Act of March 6, 1920 (U.S.C., title 35, sec. 79), stating that the "Commissioner is authorized to pay back any sum or sums of money paid to him by any person by mistake or in excess of the fee required by law." The Comptroller's opinion stated,

> Whenever an application, or petition for revival, apparently valid upon its face, is received, considered and filed by the Patent Office, a service has been rendered or a privilege granted.... Although the state grants no authority for the revival of a forfeited application, it is clear that when fees of the class in question here are submitted said fees are for the purpose of having the application considered as one for revival of an abandoned application. A certain amount of service is involved before it is finally determined that what is sought to be revived by the petition is a forfeited application -- one not revivable. Fees submitted under such circumstances may not be said to have been paid by mistake within the meaning of the 1920 statute cited and quoted in part in your submission. (citations omitted).

Arguments that a paper and fee were unnecessary do not establish a fee was paid by mistake. For example, if one files an appeal and fee, one cannot obtain a refund by later proving the appeal and fee were unnecessary. The Comptroller General has stated,[2]

> Applicant is not entitled to refund of fee paid for appeal to Board of Appeals although examiner subsequently withdrew final rejection, thus placing application in condition for allowance and obviating necessity for appeal.

Any request for reconsideration must be submitted within TWO (2) MONTHS from the mail date of this decision. No further petition fee is required for the request. Extensions of time under 37 CFR 1.136(a) are NOT permitted. The reconsideration request should include a cover letter entitled "Renewed Petition under 37 CFR 1.181." This is **not** final agency action within the meaning of 5 U.S.C. § 704.

---

[1] Opinion of the Comptroller General of the United States, 116 Comp. Gen. 283 (1936).

[2] Opinion of the Comptroller General of the United States, 113 U.S.P.Q. (BNA) 28 (Comp. Gen. 1957).

Further correspondence with respect to this matter should be addressed as follows:

By mail: Mail Stop Petition
Commissioner for Patents
P.O. Box 1450
Alexandria, VA 22313-1450

By facsimile: (571) 273-8300
Attn: Office of Petitions

By hand: U.S. Patent and Trademark Office
Customer Service Window
Randolph Building
401 Dulany Street
Alexandria, VA 22314

Telephone inquiries regarding this communication should be directed to Petitions Attorney Steven Brantley at (571) 272-3203.

Charles Steven Brantley
Senior Petitions Attorney
Office of Petitions

UNITED STATES PATENT AND TRADEMARK OFFICE

Commissioner for Patents
United States Patent and Trademark Office
P.O. Box 1450
Alexandria, VA 22313-1450
www.uspto.gov

092005

FITCH, EVEN, TABIN & FLANNERY
120 SOUTH LASALLE STREET
SUITE 1600
CHICAGO IL 60603-3406

NOV 1 2005

In re Application of:
Eric Robb et al.
Serial No.: 10/368,134
Filed: February 18, 2003
For: AUTOMATIC GATE OPERATOR

DECISION ON PETITION

This is a decision on the petition filed February 14, 2005, to withdraw the holding of abandonment of the above-identified application.

The petition is GRANTED.

This application was held abandoned for failure to respond in a timely manner to the non-final Office action of May 13, 2004. A Notice of Abandonment was mailed on February 1, 2005.

Petitioner asserts that a response including an amendment and petition for a three-month extension of time was timely filed on Monday, November 15, 2004, in response to the Office Action of May 13, 2004, as evidenced by a copy of a postcard receipt acknowledging receipt in the USPTO of a response and a petition for extension of time on November 18, 2004. Copies of the papers filed on November 18, 2004 were provided with the petition. The petition for extension of time and the "Response to Office Action" each bears a certificate of mailing under 37 C.F.R. § 1.8(a) dated November 15, 2004.

The Response filed November 18, 2004 was not of record and cannot be located. A review of the copy of the "Response to Office Action" submitted with the petition reveals that the application number was incorrectly listed as 10/368,234 instead of 10/368,134. This error is considered a minor error within the meaning of MPEP § 502 and should have been readily identified by the USPTO personnel and matched with the proper application file. As such, the response was timely filed and should have been associated with the application file. The application record also indicates that the fee for the extension of time of three months was received on November 18, 2004 and processed on November 19, 2004.

In view of the above-stated reasons, the Notice of Abandonment is hereby vacated and the holding of abandonment withdrawn.

The copy of the response submitted with the petition is hereby accepted since the original response was apparently lost after receipt thereof..

Any inquiry regarding this decision should be directed to Hien H. Phan, Special Program Examiner, at (571) 272-1606.

Richard K. Seidel, TC Director
Technology Center 2800
Semiconductors, Electrical and Optical
Systems and Components

UNITED STATES PATENT AND TRADEMARK OFFICE

COMMISSIONER FOR PATENT
UNITED STATES PATENT AND TRADEMARK OFFIC
WASHINGTON, D.C. 2023
www.uspto.gc

COPY

COPY MAILED

FEB 1 2 2002

OFFICE OF PETITIONS

MICHAEL COSMAN
638 SPRINGBROOK NORTH
IRVINE, CA 92615

In re Application of
Jonathan D. Zook; David W. Jordan; Dean M. Willard; George Jones; Michael Cosman
Application No. 09/802,427
Filed: March 9, 2001
For: CHEMICALLY RESISTANT POLYTHIOETHERS AND FORMATION THEREOF

Dear Mr. Cosman:

You are named as a joint inventor in the above identified United States patent application, filed under the provisions of 35 U.S.C. 116 (United States Code), and 37 CFR 1.47(a), Rules of Practice in Patent Cases. Should a patent be granted on the application you will be designated therein as a joint inventor.

As a named inventor you are entitled to inspect any paper in the file wrapper of the application, order copies of all or any part thereof (at a prepaid cost per 37 CFR 1.19) or make your position of record in the application. Alternatively, you may arrange to do any of the preceding through a registered patent attorney or agent presenting written authorization from you. If you care to join in the application, counsel of record (see below) would presumably assist you. Joining in the application would entail the filing of an appropriate oath or declaration by you pursuant to 37 CFR 1.63.

Telephone inquiries regarding this communication should be directed to the Irvin Dingle at (703) 306-5684. Requests for information regarding your application should be directed to the File Information Unit at (703) 308-2733. Information regarding how to pay for and order a copy of the application, or a specific paper in the application, should be directed to Certification Division at (703) 308-9726 or 1 (800) 972-6382 (outside the Washington D.C. area).

Frances Hicks

Frances Hicks
Lead Petitions Examiner
Office of Petitions
Office of the Deputy Commissioner
for Patent Examination Policy

cc:

Gifford, Krass, Groh, Sprinkle,
Anderson & Citkowski, P.C.
280 N. Old Woodward, Suite 400
Birmingham, MI 48009

10368135 .022003

UNITED STATES PATENT AND TRADEMARK OFFICE

PET-1050 2/NU

COMMISSIONER FOR PATENTS
UNITED STATES PATENT AND TRADEMARK OFFICE
WASHINGTON, D.C. 20231
www.uspto.gov

Paper No. 9

GIFFORD, KRASS, GROH, SPRINKLE,
ANDERSON & CITKOWSKI, P.C.
280 N. OLD WOODWARD, SUITE 400
BIRMINGHAM, MI 48009

COPY

COPY MAILED

FEB 12 2002

OFFICE OF PETITIONS

In re Application of	:
Jonathan D. Zook et al.	:
Application No. 09/802,427	: DECISION GRANTING
Filed: March 9, 2001	:STATUS UNDER 37 CFR 1.47(a)
For: CHEMICALLY RESISTANT	:
POLYTHIOETHERS AND FORMATION	:
THEREOF	

This is in response to the petition filed January 25, 2002, requesting reconsideration of a decision mailed October 10, 2001, which refused to accord 37 CFR 1.47(a) status to the above-identified application.

The petition is granted.

Petitioner has shown that the non-signing inventor has refused to join in the filing of the above-identified application.

The above-identified application and papers have been reviewed and found in compliance with 37 CFR 1.47(a). This application is hereby accorded Rule 1.47(a) status. As provided in Rule 1.47(c), this Office will forward notice of this application's filing to the non-signing inventor at the address given in the petition. Notice of the filing of this application will also be published in the Official Gazette.

Telephone inquiries regarding this decision should be directed to Irvin Dingle at (703) 306-5684.

This application is being forwarded to Technology Center 1700.

Frances Hicks
Lead Petitions Examiner
Office of Petitions
Office of the Deputy Commissioner
for Patent Examination Policy

RECEIVED
FEB 20 2002
GIFFORD, KRASS, GROH, SPRINKLE,
ANDERSON & CITKOWSKI, P.C.

UNITED STATES PATENT AND TRADEMARK OFFICE

Commissioner for Patents
United States Patent and Trademark Office
P.O. Box 1450
Alexandria, VA 22313-1450
www.uspto.gov

GENERAL ELECTRIC COMPANY (PCPI)
C/O FLETCHER YODER
P.O. BOX 692289
HOUSTON, TX 77269-2289

COPY MAILED

SEP 08 2005

OFFICE OF PETITIONS

In re Application of :
Kelvin MA et al. :
Application No. 10/368,162 : ON PETITION
Filed: February 18, 2003 :
Attorney Docket No. 126971-1 :

This is a decision on the petition under 37 CFR 1.137(b), filed August 2, 2005, to revive the above-identified application.

The petition is **GRANTED**.

The above-identified application became abandoned for failure to submit the issue fee in a timely manner in reply to the Notice of Allowance mailed March 14, 2005, which set a statutory period for reply of three (3) months. Accordingly, by operation of law, the above-identified application became abandoned on June 15, 2005.

The petition satisfies the conditions for revival pursuant to the provisions of 37 CFR 1.137(b) in that (1) the reply in the form of payment of the Issue Fee; (2) the petition fee of $1500; and (3) the required statement of unintentional delay have been received. Accordingly, the Issue Fee payment is accepted as having been unintentionally delayed.

Telephone inquiries concerning this decision should be directed to David A. Bucci at (571) 272-7099 or in his absence, the undersigned at (571) 272-3217.

The application file is being referred to the Office of Patent Publication.

Brian Hearn
Petitions Examiner
Office of Petitions

UNITED STATES PATENT AND TRADEMARK OFFICE

COMMISSIONER FOR PATENTS
UNITED STATES PATENT AND TRADEMARK OFFICE
P.O. BOX 1450
ALEXANDRIA, VA 22313-1450
www.uspto.gov

Paper No. 4

HARNESS, DICKEY & PIERCE
7700 BONHOMME, SUITE 400
ST. LOUIS, MO 63105

COPY MAILED

JUL 1 8 2003

OFFICE OF PETITIONS

In re Application of
Thomson et al.
Application No. 10/368,166
Filed: February 17, 2003
Attorney Docket No. 7784-000496

DECISION ACCORDING
STATUS UNDER
37 CFR 1.47(a)

This decision concerns the June 30, 2003 petition under 37 CFR 1.47(a).

The petition is **GRANTED.**

Five inventors are named in this application which, upon filing, included a declaration signed by only four of the inventors ("2/17/03 Declaration"). A "Notice to File Missing Parts of Nonprovisional Application" was mailed on April 29, 2003, giving Applicants an extendable 2-month period to submit a proper oath or declaration. In response, the instant petition was filed, asserting that the remaining inventor, David R. Lee ("Lee"), refused to join in this application, and requesting that the available inventors be allowed to file the application on behalf of themselves and Lee.

Under 37 CFR 1.47(a), the available inventors may file this application on behalf of themselves as well as Lee provided that a *bona fide* attempt has been made to present to Lee, for review and signature, a copy of the entire application (specification including claims; drawings), and that the latter refuses to join in this application.[1]

To show that Lee has refused to join in this application despite such a *bona fide* attempt, the petition must include, *inter alia*, a statement of facts concerning the circumstances of the presentation of the application papers to Lee at his last known address,[2] and his subsequent refusal.[3]

The petition and the accompanying exhibits indicate that counsel for Assignee had mailed Lee a copy of the entire application on January 30, 2003, and received a letter dated March 1, 2003, indicating Lee's express refusal to join in this application. This letter only contains a type-written name "David Lee" and is not signed. There is no evidence that Lee actually wrote this letter.

However, according to the exhibits filed with the instant petition, counsel was able to reach Lee

---

1 See MPEP section 409.03(d) (Rev. 1, Feb. 2003).

2 37 CFR 1.47(a); MPEP section 409.03(e) (Rev. 1, Feb. 2003).

3 *Supra* note 1.

on January 14, 2003 via an e-mail address provided by Lee's attorney representing him on matters concerning another patent. The January 30, 2003 package was mailed to the address specifically designated by Lee during Lee's January 16, 2003 reply to counsel's January 14, 2003 e-mail, and is likely to be a reliable address on or about January 30, 2003 when counsel mailed the application papers to Lee. The application papers are presumed to have been received by Lee at that address or at a forwarding address.

Moreover, counsel apparently e-mailed Lee on February 7 and 14, 2003 but did not receive any reply as of June 30, 2003 when counsel signed the instant petition in preparation for its filing.

In view of the above, the Office concludes that counsel had made a *bona fide* attempt to obtain Lee's signature in the declaration before concluding that Lee refused to join in the application. The petition is thus granted. The 2/17/03 Declaration is hereby accepted.

The application is now complete.

In addition, as authorized in the petition, Deposit Account No. 08-0750 has been charged the $130 petition fee and the $130 surcharge for lacking an acceptable oath/declaration upon filing of the application.

As provided in 37 CFR 1.47(c), the Office will forward notice of the filing of this application to Lee at his last known address provided in the petition:

5138 S. Othello St.
Seattle, WA 98118

Notice of the filing of this application will also be published in the *Official Gazette*.

Since the above address for Lee is different from that listed in the 2/17/03 Declaration, a supplemental oath or declaration correcting Lee's last known address should be filed with the response to an Office action on the merits.

The application file is being forwarded to Technology Center 2600 for examination in due course.

Telephone inquiries should be directed to the undersigned at (703) 308-0763.

RC Tang
Petitions Attorney
Office of Petitions

UNITED STATES PATENT AND TRADEMARK OFFICE

COMMISSIONER FOR PATENTS
UNITED STATES PATENT AND TRADEMARK OFFICE
P.O. BOX 1450
ALEXANDRIA, VA 22313-1450
www.uspto.gov

David R. Lee
5138 S. Othello St.
Seattle, WA 98118

COPY MAILED

JUL 1 8 2003

OFFICE OF PETITIONS

In re Application of
Thomson et al.
Application No. 10/368,166
Filed: February 17, 2003
For: METHOD AND APPARATUS FOR TRANSPORTATION VEHICLE SECURITY MONITORING

LETTER

Dear Mr. Lee,

You are named as a joint inventor in the above identified United States patent application, filed under the provisions of 35 U.S.C. 116 (United States Code), and 37 CFR 1.47(a) (Rules of Practice for the United States Patent and Trademark Office [USPTO]). Should a patent be granted on the application, you will be designated therein as a joint inventor.

As a named inventor, you are entitled to inspect any paper in the file wrapper of the application, order copies of all or any part thereof (at a prepaid cost pursuant to 37 CFR 1.19), or make your position of record in the application. Alternatively, you may do any of the aforementioned through an attorney or agent registered to practice before the USPTO and presenting written authorization from you. If you care to join in the application, counsel of record (see below) would presumably assist you. Joining in the application would entail the filing of an appropriate oath or declaration by you pursuant to 37 CFR 1.63.

Requests for information regarding this application should be directed to the File Information Unit at (703) 308-2733. For information on how to order a copy of the application or a specific paper in the application, contact the Certification Division at (703) 308-9726 or 1-(800) 972-6382 (outside the Washington DC area). Telephone inquiries regarding this letter should be directed to the undersigned at (703) 308-0763.

RC Tang
Petitions Attorney
Office of Petitions
Office of the Commissioner
for Patents

cc: Alan L. Cassel, Esq.
Harness, Dickey & Pierce, P.L.C.
7700 Bonhomme, Suite 400
St. Louis, MO 63105

UNITED STATES PATENT AND TRADEMARK OFFICE

COMMISSIONER FOR PATENTS
UNITED STATES PATENT AND TRADEMARK OFFICE
P.O. BOX 1450
ALEXANDRIA, VA 22313-1450
www.uspto.gov

John L. Rogitz, Esq.
ROGITZ & ASSOCIATES
Suite 3120
750 "B" Street
San Diego, CA 92101

COPY MAILED
JUL 17 2006
OFFICE OF PETITIONS

In re Application of	:	
Noda et al.	:	
Application No. 10/368,167	:	ON PETITION
Filed: February 18, 2003	:	
Attorney Docket Number:	:	
1156.021	:	

This is a decision on the Petition for Revival of an Application for Patent Abandoned Unintentionally Under 37 C.F.R. § 1.137(b), filed February 8, 2006.

This Petition is hereby **granted**.

The above-identified application became abandoned for failure to timely and properly reply to the Notice of Allowance and Issue Fee Due, mailed November 3, 2005. The Notice set a non-extendable three (3) month period for reply. No reply having been received, the application became abandoned on February 4, 2006. The mailing of this Decision precedes the mailing of a Notice of Abandonment.

With the instant petition, Applicant has submitted the issue fee. Accordingly, the petition is granted.

This application is being referred to Publishing Division for processing into a patent.

Telephone inquiries concerning this decision should be directed to the undersigned at (571) 272-3232.

Derek L. Woods
Attorney
Office of Petitions

SPE RESPONSE FOR CERTIFICATE OF CORRECTION

Paper No.:

DATE : October 25, 2006

TO SPE OF : ART UNIT

SUBJECT : Request for Certificate of Correction on Patent No.:

A response is requested with respect to the accompanying request for a certificate of correction.

Please complete this form and return with file, within **7** days to:
Certificates of Correction Branch - PK 3-910
Palm location **7590** - Tel. No. 305-8201

With respect to the change(s) requested, correcting Office and/or Applicant's errors, should the patent read as shown in the certificate of correction? No new matter should be introduced, nor should the scope or meaning of the claims be changed.

Thank You For Your Assistance **Certificates of Correction Branch**

The request for issuing the above-identified correction(s) is hereby:
Note your decision on the appropriate box.

☒ **Approved** **All** changes apply.

☐ **Approved in Part** Specify below which changes **do not** apply.

☐ **Denied** State the reasons for denial below.

Comments:

ANDREW H. HIRSHFELD
SUPERVISORY PATENT EXAMINER
TECHNOLOGY CENTER 2800

2858

SPE: _____ **Art Unit**

PTO/SB/44 (04-05)
Approved for use through 04/30/2007. OMB 0651-0033
U.S. Patent and Trademark Office; U.S. DEPARTMENT OF COMMERCE
Under the Paperwork Reduction Act of 1995, no persons are required to respond to a collection of information unless it displays a valid OMB control number.
(Also Form PTO-1050)

UNITED STATES PATENT AND TRADEMARK OFFICE
CERTIFICATE OF CORRECTION

PATENT NO. : 7,064,555

APPLICATION NO.: 10/368,179

ISSUE DATE : June 20, 2006

INVENTOR(S) : Jamneala et al.

It is certified that an error appears or errors appear in the above-identified patent and that said Letters Patent is hereby corrected as shown below:

In column 18, line 26, in Claim 10, delete "f" and insert - - *f* - -, therefor.

In column 19, line 63, in Claim 21, after "standards" insert - - , - -.

MAILING ADDRESS OF SENDER (Please do not use customer number below):
Agilent Technologies

This collection of information is required by 37 CFR 1.322, 1.323, and 1.324. The information is required to obtain or retain a benefit by the public which is to file (and by the USPTO to process) an application. Confidentiality is governed by 35 U.S.C. 122 and 37 CFR 1.14. This collection is estimated to take 1.0 hour to complete, including gathering, preparing, and submitting the completed application form to the USPTO. Time will vary depending upon the individual case. Any comments on the amount of time you require to complete this form and/or suggestions for reducing this burden, should be sent to the Chief Information Officer, U.S. Patent and Trademark Office, U.S. Department of Commerce, P.O. Box 1450, Alexandria, VA 22313-1450. DO NOT SEND FEES OR COMPLETED FORMS TO THIS ADDRESS. SEND TO: **Attention Certificate of Corrections Branch, Commissioner for Patents, P.O. Box 1450, Alexandria, VA 22313-1450.**

If you need assistance in completing the form, call 1-800-PTO-9199 and select option 2.

SEP 1 3 20[illegible]

PTO/SB/44 (04-05)
Approved for use through 04/30/2007. OMB 0651-0033
U.S. Patent and Trademark Office; U.S. DEPARTMENT OF COMMERCE
Under the Paperwork Reduction Act of 1995, no persons are required to respond to a collection of information unless it displays a valid OMB control number.
(Also Form PTO-1050)

UNITED STATES PATENT AND TRADEMARK OFFICE
CERTIFICATE OF CORRECTION

PATENT NO. : 7,064,555

APPLICATION NO.: 10/368,179

ISSUE DATE : June 20, 2006

INVENTOR(S) : Jamneala et al.

It is certified that an error appears or errors appear in the above-identified patent and that said Letters Patent is hereby corrected as shown below:

On the face page, in field (56), under "Other Publications", in column 2, line 9, delete "vol." and insert - - Vol. - -, therefor.

In column 20, line 33, in Claim 24, delete "computer;" and insert - - computer: - -, therefor.

MAILING ADDRESS OF SENDER (Please do not use customer number below):
Agilent Technologies

This collection of information is required by 37 CFR 1.322, 1.323, and 1.324. The information is required to obtain or retain a benefit by the public which is to file (and by the USPTO to process) an application. Confidentiality is governed by 35 U.S.C. 122 and 37 CFR 1.14. This collection is estimated to take 1.0 hour to complete, including gathering, preparing, and submitting the completed application form to the USPTO. Time will vary depending upon the individual case. Any comments on the amount of time you require to complete this form and/or suggestions for reducing this burden, should be sent to the Chief Information Officer, U.S. Patent and Trademark Office, U.S. Department of Commerce, P.O. Box 1450, Alexandria, VA 22313-1450. DO NOT SEND FEES OR COMPLETED FORMS TO THIS ADDRESS. SEND TO: **Attention Certificate of Corrections Branch, Commissioner for Patents, P.O. Box 1450, Alexandria, VA 22313-1450.**

If you need assistance in completing the form, call 1-800-PTO-9199 and select option 2.

2 1 3 2006

Certificate of Correction

10/368179 Examiner: DEB, ANJAN GAU: 2858
Classification: 324/601.000 Inventor: JAMNEALA , TIBERIU, et al
Status: 150 - PATENTED CASE
Title: NETWORK ANALYZER CALIBRATION EMPLOYING RECIPROCITY OF A DEVICE

Bib Data report

Application Title: NETWORK ANALYZER CALIBRATION EMPLOYING RECIPROCITY OF A DEVICE

Application Num: (in phx) 10/368179 **Filing Date:** 02/18/2003
Effective Filing: 02/18/2003
(Location History) (Foreign/Continuity Data)

Status: 150/PATENTED CASE **Status Date:** 05/31/2006

Patent Number: 7064555 **Issue Date:** 06/20/2006 **Date of Abandonment:** N/A
Confirmation Number: 5253 **PALM Location:**

Examiner: 77136 DEB, ANJAN (Assignment Data) **Group Art Unit:** 2858
Class/Subclass: 324/601.000

State or Country: CALIFORNIA **Sheets/Drawing:** 6 **Total Claims:** 30
Independent Claims: 7

Inventors:

Last name, First name:	City:	Country or State:
JAMNEALA, TIBERIU	SAN FRANCISCO	CALIFORNIA
FELD, DAVID	NEWARK	CALIFORNIA
ZAINI, BURHAN	KEDAH	MALAYSIA

Attorneys: ALL **Attorney Docket No:** 10020627-1

Interference No: **Lost Case:** No **Unmatched Petition:** No **L&R Code:** 1

UNITED STATES PATENT AND TRADEMARK OFFICE

Commissioner for Patents
United States Patent and Trademark Office
P.O. Box 1450
Alexandria, VA 22313-1450
www.uspto.gov

BAHRET & ASSOCIATES
320 NORTH MERIDIAN STREET
SUITE 510
INDIANAPOLIS, IN 46204

COPY MAILED

FEB 20 2007

OFFICE OF PETITIONS

In re Application of

Geddes, et al.

Application No. 10/368,180

Filed: February 18, 2003

Attorney Docket No. 13054-213

DECISION ON PETITION

This is a decision on the petition under 37 CFR 1.137(b), filed September 28, 2006, to revive the above-identified application.

The petition is **GRANTED**.

A final Office action was mailed in the above-cited application on October 20, 2005, which set a shortened statutory period for reply of three (3) months from its mailing date. A response was filed on April, 18, 2006, with a request for an extension of time within the third month. An Advisory Action mailed May 1, 2006, advised petitioner that the response of April 18, 2006, failed to place the application in condition for allowance. No further responses were filed within the allowable period. The application became abandoned on April 21, 2006. A Notice of Abandonment was mailed May 4, 2006.

The Request for Continued Examination, filed September 28, 2006, is noted and made of record.

The application is being forwarded to Technology Center 3700, GAU 3735 for further processing.

Telephone inquiries concerning this decision should be directed to the undersigned at (571) 272-3222.

Kenya A. McLaughlin
Petitions Attorney
Office of Petitions

10/368,188

SPE RESPONSE FOR CERTIFICATE OF CORRECTION

DATE : 6/16/05

Paper No.: —

TO SPE OF : ART UNIT 2812

SUBJECT : Request for Certificate of Correction on Patent No.: 6831318 B2

A response is requested with respect to the accompanying request for a certificate of correction.

Please complete this form and return with file, within **7** days to:
Palm location **7580, Certificates of Correction Branch – South Tower – 9A22**
If response is for an IFW, **return to employee (named below) via PUBSCofC Team in MADRAS.**
With respect to the change(s) requested, correcting Office and/or Applicant's errors, should the patent read as shown in the certificate of correction (COCIN)? No new matter should be introduced, nor should the scope or meaning of the claims be changed.

Virginia Tolbert

Thank You For Your Assistance

Certificates of Correction Branch
Tel. No. 703-308-9390 ext. 113

The request for issuing the above-identified correction(s) is hereby:
Note your decision on the appropriate box.

- ☒ **Approved** — **All** changes apply.
- ☐ **Approved in Part** — Specify below which changes **do not** apply.
- ☐ **Denied** — State the reasons for denial below.

Comments:

SPE — 2812 **Art Unit**

UNITED STATES PATENT AND TRADEMARK OFFICE

Commissioner for Patents
United States Patent and Trademark Office
P.O. Box 1450
Alexandria, VA 22313-1450
www.uspto.gov

THE PROCTER & GAMBLE COMPANY
GLOBAL LEGAL DEPARTMENT - IP
SYCAMORE BUILDING - 4TH FLOOR
299 EAST SIXTH STREET
CINCINNATI, OH 45202

COPY MAILED

NOV 19 2008

OFFICE OF PETITIONS

In re Application of
Paul Alfred Cimluca, et al.
Application No. 10/368,226
Filed: February 18, 2003
Attorney Docket No. 8938

ON PETITION

This is a decision in response to the petition, filed August 12, 2008, to revive the above-identified application under the provisions of 37 CFR 1.137(b).

The petition is **GRANTED**.

The application became abandoned for failure to reply in a timely manner to the non-final Office action mailed February 7, 2008, which set a shortened statutory period for reply of three (3) months. No extension of time under the provisions of 37 CFR 1.136(a) was obtained. Accordingly, the application became abandoned on May 13, 2008. This decision precedes the mailing of a Notice of Abandonment. On August 12, 2008, the present petition was filed.

The petition satisfies the conditions for revival pursuant to the provisions of 37 CFR 1.137(b) in that petitioner has supplied (1) a proposed reply in the form of an amendment; (2) the petition fee of $1,540; and (3) an adequate statement of unintentional delay.

An extension of time under 37 CFR 1.136 must be filed prior to the expiration of the maximum extendable period for reply. *See* In re Application of S., 8 USPQ2d 1630, 1631 (Comm'r Pats. 1988). Since the $1,050 extension of time fee submitted with the petition on April 12, 2008 was subsequent to the maximum extendable period for reply, this fee is unnecessary and will be credited to petitioner's deposit account.

The application is being referred to Technology Center AU 1651 for appropriate action by the Examiner in the normal course of business on the response filed August 12, 2008.

Telephone inquiries concerning this decision should be directed to the undersigned at (571) 272-3204. Inquiries relating to further prosecution should be directed to the Technology Center.

Sherry D. Brinkley
Petitions Examiner
Office of Petitions

UNITED STATES PATENT AND TRADEMARK OFFICE

COMMISSIONER FOR PATENTS
UNITED STATES PATENT AND TRADEMARK OFFICE
WASHINGTON, D.C. 20231
www.uspto.gov
DW 03-03

Paper No. 3

THOMAS E. ANDERSON
GIFFORD, KRASS, GROH, SPRINKLE
PATMORE, ANDERSON & CITKOWSKI, P.C.
280 N. OLD WOODWARD, SUITE 400
BIRMINGHAM, MI 48009

COPY MAILED

MAR 2 4 2003

OFFICE OF PETITIONS

In re Application of	:
Dennis B. Bills, Sr.	: DECISION GRANTING
Application No. 10/368,252	: PETITION
Filed: 18 February, 2003	:
Att'y Dkt No. TCI-11204/08	:

This is a decision on the petition filed on 11 March, 2003, under 37 CFR 1.10(c) requesting that the above-identified application be accorded a filing date of 18 February, 2003, rather than the presently accorded filing date of 20 February, 2003.

Petitioner alleges that the application was deposited in Express Mail service on 18 February, 2003. In support, on 11 March, 2003, petitioner supplied a copy of a U.S. Postal Service Pickup Service Statement--Express Mail, Priority Mail, or Parcel Post bearing, *inter alia*, Express Mail Label No. EV255208028US (the same Express Mail number found on the itemized transmittal sheet accompanying the original application papers located in the official file). Although the pickup date on the copy of the Pickup Service Statement provided is illegible, a search of the USPS Internet Track & Confirm Database reveals that this Express Mail Label No. was accepted by the USPS on 18 February, 2003.

In view of the above, the petition is granted. No petition fee is required.

The application is being returned to the Office of Initial Patent Examination (OIPE) for correction of the filing date to 18 February, 2003, and for issuance of a corrected Filing Receipt.

Telephone inquiries specific to this matter should be directed to the undersigned at (703) 308-6918.

DWood

Douglas I. Wood
Senior Petitions Attorney
Office of Petitions

UNITED STATES PATENT AND TRADEMARK OFFICE

COMMISSIONER FOR PATENTS
UNITED STATES PATENT AND TRADEMARK OFFICE
P.O. BOX 1450
ALEXANDRIA, VA 22313-1450
www.uspto.gov

FISH & RICHARDSON P.C.
3300 DAIN RAUSCHER PLAZA
60 SOUTH SIXTH STREET
MINNEAPOLIS MN 55402

COPY MAILED

DEC 14 2004

OFFICE OF PETITIONS

Applicant: Kerker et al.
Appl. No.: 10/368,265
Filing Date: February 18, 2003
Title: FRAMELESS DISPLAY FIXTURE
Attorney Docket No.: 13213-050001
Pub. No.: US 2004/0055187 A1
Pub. Date: March 25, 2004

This is in response to the request for correction of patent application publication under 37 CFR 1.221(b), which was received on May 26, 2004.

The request is DISMISSED.

The instant request is that the patent application publication be republished because publication misprints the following sentence:

> "FIG. 5 shows a cross-section of one embodiment of the rib supports 50 from FIG. 4. The rib supports are integrally formed along the back side 32 of the panel 30 with a draft angle 55 of about 1° to 20°. In particular, a draft angle of about 3° to about 10° is preferable, and in certain embodiments about 4° to about 8°." as

> "FIG. 5 shows a cross-section of one embodiment of the rib supports 50 from FIG. 4. The rib supports are integrally formed along the back side 32 of the panel 30 with a draft angle 55 of about 10 to 200. In particular, a draft angle of about 3° to about 100 is preferable, and in certain embodiments about 4° to about 8°."

37 CFR 1.221(b) is applicable "only when the Office makes a material mistake which is apparent from Office records . . .. This period is not extendable." A material mistake must affect the public's ability to appreciate the technical disclosure of the patent application publication, to determine the scope of the patent application publication, or to determine the scope of the provisional rights that an applicant may seek to enforce upon issuance of a patent.[1]

The typographical errors wherein the degree symbol "°" is misprinted as a "0" are Office errors,

[1] Changes to Implement Eighteen-Month Publication of Patent Applications, 65 FR 57023, 57038 (Sept. 20, 2000), 1239 Off. Gaz. Pat. Office Notices 63, 75 (Oct. 10, 2000) (final rule).

but they are typographical errors which are understandable from reading the sentence, paragraph and specification in which the terms are used, as terms are not read in a vacuum. The disclosure is referencing Figure 5, and Figure 5shows small angels, which clearly are less than 100 or 200 degrees. The mistakes do not affect the public's ability to appreciate the technical disclosure of the patent application publication, or determine the scope of the patent application publication or determine the scope of the provisional rights that an applicant may seek to enforce upon issuance of a patent. Furthermore, this is not a material error since the Image File Wrapper (IFW) for this application is available to the public, as of July 31, 2004. To further reduce the likelihood of these types of errors, applicant should file application papers with cleaner text.

The applicant is advised that a "request for republication of an application previously published" may be filed under 37 CFR 1.221(a). Such a request for republication "must include a copy of the application in compliance with the Office's electronic filing system requirements and be accompanied by the publication fee set forth in § 1.18(d) and the processing fee set forth in § 1.17(i)." If the request for republication does not comply with the electronic filing system requirements, the republication will not take place and the publication fee set forth in § 1.18(d) will be refunded. The processing fee will be retained.

Any request for republication under 37 CFR 1.221(a), must be submitted via the EFS system and questions should be addressed as follows:

By mail to: Mail Stop PGPUB
Commissioner for Patents
P.O. Box 1450
Alexandria, VA 22313-1450

By facsimile: 703-872-9306

Inquires concerning this communication should be directed to Mark Polutta at (571) 272-7709.

Mark O. Polutta
Office of Patent Legal Administration
Office of the Deputy Commissioner
for Patent Examination Policy

UNITED STATES PATENT AND TRADEMARK OFFICE

Commissioner for Patents
United States Patent and Trademark Office
P.O. Box 1450
Alexandria, VA 22313-1450
www.uspto.gov

SCHWEGMAN, LUNDBERG, WOESSNER & KLUTH, P.A.
P.O. BOX 2938
MINNEAPOLIS, MN 55402

COPY MAILED
JUL 0 3 2006
OFFICE OF PETITIONS

In re Application of	:	
Kathryn E. Uhrich	:	
Application No. 10/368,288	:	DECISION ON PETITION
Filed: February 18, 2003	:	TO WITHDRAW
Attorney Docket No. 01435.013US3	:	FROM RECORD
	:	

This is a decision on the Request to Withdraw as attorney or agent of record under 37 C.F.R. § 1.36(b), filed March 24, 2006.

The request is **NOT APPROVED** as moot.

A review of the file record indicates that the power of attorney to Monique Shonka, along with all of the other attorneys associated with Customer No. **21186** has been revoked by the assignee of the patent application on May 1, 2006. Accordingly, the request to withdraw under 37 C.F.R. § 1.36(b) is moot.

All future communications from the Office will be directed to the below-listed address until otherwise notified by applicant/assignee or the current attorneys of record.

This application is being referred to Technology Center AU 1615 to await a reply to the Non-final rejection mailed March 27, 2006.

Telephone inquires concerning this decision should be directed to the undersigned at 571-272-3208.

Karen Creasy

Karen Creasy
Petitions Examiner
Office of Petitions

conferee

cc:
VIKSNINS HARRIS & PADYS PLLP
P.O. BOX 111098
ST. PAUL, MN 55111-1098

UNITED STATES PATENT AND TRADEMARK OFFICE

Commissioner for Patents
United States Patent and Trademark Office
P.O. Box 1450
Alexandria, VA 22313-1450
www.uspto.gov

MAILED
FROM DIRECTORS OFFICE

FEB 18 2005

TECHNOLOGY CENTER 3600

Robert M. Downey, P.A.
601 South Federal Highway, Suite 300
Boca Raton, FL 33432

In re Application of:	:	
Philip Newman	:	NOTICE OF WITHDRAWAL
Application No. 10/368,296	:	FROM ISSUE
Filed: February 13, 2003	:	UNDER 37 CFR § 1.313
Attorney Docket No. RAINPA103	:	

On February 23, 2004 a non-final Office action was mailed. Shortly thereafter, on February 26, 2004 a Notice of Allowance was mailed. The letter is confirming the conversation between SPE Carone and Mr. Downey that the Notice of Allowance was mailed in error. Mr. Downey also confirmed that a reply to the Office action mailed on February 23, 2004 was not sent.

The above-identified application is withdrawn from issue pursuant to 37 CFR § 1.313. The notice of allowance was issued in error. The application is being forwarded to the examiner for processing of a Notice of Abandonment.

The above-identified application is hereby withdrawn from issue.

United States Patent and Trademark Office (USPTO) records indicate that the issue fee has not yet been submitted. If the issue fee and publication fee has been submitted, applicant may request: (1) a refund; or, (2) that the fee be credited to a deposit account. Applicant may, however, wait until such time as the application is either allowed or abandoned to make such request. If the application is subsequently allowed, upon receipt of a new Notice of Allowance and Issue and Publication Fee Due, applicant may further request that the previously submitted issue fee and publication fee be applied toward payment of the issue fee and publication fee in the amount identified in the new Notice of Allowance and Issue and Publication Fee Due. If the application is abandoned, applicant may request either a refund or a credit to a specified Deposit Account.

Telephone inquires should be directed to Supervisory Patent Examiner Michael J. Carone at (703) 306-4198.

The above-identified application is being forwarded to the examiner for prompt appropriate action, including notifying applicant of the new status of this application.

Donald T. Hajec, Director
Technology Center 3600

UNITED STATES PATENT AND TRADEMARK OFFICE

Commissioner for Patents
United States Patent and Trademark Office
P.O. Box 1450
Alexandria, VA 22313-1450
www.uspto.gov

LINDEN, STAUFFER PATENTS
1006 MONTFORD RD.
CLEVELAND HTS. OH 44121

COPY MAILED

JAN 0 5 2009

OFFICE OF PETITIONS

In re Application of

KIM, Hyeokman et al.
Application No. 10/368,304
Filed: October 31, 2007
Attorney Docket No. **Viv-P5**

DECISION ON PETITION
TO WITHDRAW
FROM RECORD

This is a decision on the Request to Withdraw as attorney or agent of record under 37 C.F.R. § 1.36(b), filed December 12, 2008.

The request is **APPROVED**.

A grantable request to withdraw as attorney/agent of record must be signed by every attorney/agent seeking to withdraw or contain a clear indication that one attorney is signing on behalf of another/others. The Office requires the practitioner(s) requesting withdrawal to certify that he, she, or they have: (1) given reasonable notice to the client, prior to the expiration of the response period, that the practitioner(s) intends to withdraw from employment; (2) delivered to the client or a duly authorized representative of the client all papers and property (including funds) to which the client is entitled; and (3) notified the client of any responses that may be due and the time frame within which the client must respond, pursuant 37 CFR 10.40(c).

The request was signed by Dwight Stauffer on behalf of all attorneys of record who are associated with customer No. 69186. All attorneys/agents associated with the Customer Number 69186 have been withdrawn. Applicant is reminded that there is no attorney of record at this time.

All future correspondence will be directed to the first named inventor Hyeokman Kim at the address indicated below.

Telephone inquiries concerning this decision should be directed to Tredelle Jackson at 571-272-2783.

Tredelle D. Jackson
Paralegal Specialist
Office of Petitions

cc: **HYEOKMAN KIM**
HANSHIN APT 114-1401
DONAM-DONG 609-1, PUNDANG-KU
SUNGNAM CITY, KYONGGI, KOREA 463-480

UNITED STATES PATENT AND TRADEMARK OFFICE

Commissioner for Patents
United States Patent and Trademark Office
P.O. Box 1450
Alexandria, VA 22313-1450
www.uspto.gov

BAKER BOTTS L.L.P.
PATENT DEPARTMENT
98 SAN JACINTO BLVD., SUITE 1500
AUSTIN, TX 78701-4039

COPY MAILED

NOV 2 1 2006

OFFICE OF PETITIONS

In re Application of Smit et al. :
Application No. 10/368,307 :
Filing Date: February 17, 2003 :
Attorney Docket No. 068354.1371 :

Decision on Petition

This is a decision on the petition filed August 17, 2006, under 37 CFR 1.181 to withdraw the holding of abandonment of the above-identified application.

The petition is **dismissed.**

Facts:

A Notice of Allowability was mailed February 23, 2006.

The Notice of Allowability required the submission of corrected drawings.

Petitioner believed corrected drawings were not actually necessary and did not reply to the Notice of Allowability.

A Notice of Abandonment was mailed July 26, 2006, based on applicants' failure to respond to the Notice of Allowability.

During an interview with the examiner on August 17, 2006, the examiner informed petitioner the requirement for corrected drawings had been in error and corrected drawings were not necessary.

Discussion:

35 U.S.C. 133 requires that if an action is mailed, and if an applicant fails to respond to such action within 6 months or within any shorter time period set by the Office, the application goes abandoned as a matter of law. The statute does not distinguish "correct" Office actions from "incorrect" Office actions. An Office action in the form of a Notice of Allowability was mailed February 23, 2006. The Notice provided applicants with three months to file a response. Applicant did not file a response to the Notice of Allowability within 3 months. Therefore, as a matter of law, the application is abandoned.

Abandonment is not based on the correctness, in whole or in part, of an Office action. For example, if an applicant fails to respond to a restriction requirement later determined to be untenable as drafted, the application is abandoned. If an Office action is mailed rejecting claims based on anticipation over a reference that was facially not available as prior art against the application, an applicant must still respond to the Office action in order to avoid abandonment.

Petitioner failed to respond to the Notice of Allowability. Such response could have taken the form of a written traversal stating the facts in the instant petition regarding the original drawings. Petitioner could have directly contacted the examiner and taken steps to have the examiner withdraw the requirement in writing prior to the expiration of the time period for response.

For the reasons above, the holding of abandonment will not be withdrawn.

Petitioner may wish to consider filing a petition to revive under 37 CFR 1.137(a). The petition fee is $500 for a large entity. A copy of a blank petition form is enclosed for petitioner's convenience.

Any request for reconsideration must be submitted within TWO (2) MONTHS from the mail date of this decision. Extensions of time under 37 CFR 1.136(a) are NOT permitted.

Further correspondence with respect to this matter should be addressed as follows:

By mail: Mail Stop Petition
Commissioner for Patents
P.O. Box 1450
Alexandria, VA 22313-1450

By facsimile: (571) 273-8300
Attn: Office of Petitions

Telephone inquiries regarding this communication should be directed to Petitions Attorney Steven Brantley at (571) 272-3203.

Charles Steven Brantley
Senior Petitions Attorney
Office of Petitions

Attached: Form PTO/SB/61

UNITED STATES PATENT AND TRADEMARK OFFICE

Commissioner for Patents
United States Patent and Trademark Office
P.O. Box 1450
Alexandria, VA 22313-1450
www.uspto.gov

BAKER BOTTS L.L.P.
PATENT DEPARTMENT
98 SAN JACINTO BLVD., SUITE 1500
AUSTIN, TX 78701-4039

COPY MAILED

APR 2 0 2007

OFFICE OF PETITIONS

In re Application of Smit et al. :
Application No. 10/368,307 :
Filing Date: February 17, 2003 :
Attorney Docket No. 068354.1371 :

Decision on Petition

This is a decision on the petition under 37 CFR 1.137(b), filed December 5, 2006, to revive the above-identified application.

The petition is **granted**.

Facts:

A Notice of Allowability was mailed February 23, 2006.

The Notice of Allowability required the submission of corrected drawings.

Petitioner believed corrected drawings were not actually necessary and did not reply to the Notice of Allowability.

Petitioner failed to file a response to the Notice of Allowability by filing a written traversal stating the facts in the instant petition regarding the original drawings or any other response.

A Notice of Abandonment was mailed July 26, 2006, based on applicants' failure to respond to the Notice of Allowability.

During an interview with the examiner on August 17, 2006, the examiner informed petitioner the requirement for corrected drawings had been in error and the examiner had not intended to require corrected drawings.

Discussion:

The instant petition requests revival of the application.

Petitioner has met the requirements to revive the above-identified application pursuant to 37 CFR 1.137(b). Therefore, the petition is granted and the application is revived.

The Office of Publications will be informed of the instant decision and the application will be issued as a patent in due course.

Telephone inquiries regarding this communication should be directed to Petitions Attorney Steven Brantley at (571) 272-3203.

Charles Steven Brantley
Senior Petitions Attorney
Office of Petitions

UNITED STATES PATENT AND TRADEMARK OFFICE

Commissioner for Patents
United States Patent and Trademark Office
P.O. Box 1450
Alexandria, VA 22313-1450
www.uspto.gov

BRIAN D. VOYCE
8401 STERLING BRIDGE ROAD
CHAPEL HILL, NC 27516

COPY MAILED

APR 28 2005

OFFICE OF PETITIONS

In re Application of	:	
Brad Davin	:	
Application No. 10/368,312	:	ON PETITION
Filed: February 13, 2003	:	
Attorney Docket No. N/A	:	

This is a decision on the petition under 37 CFR 1.137(b), filed April 13, 2005, to revive the above-identified application.

The petition is **GRANTED**.

This application became abandoned for failure to timely file a proper reply to the non-final Office action mailed August 27, 2004. Accordingly, this application became abandoned on November 28, 2004. A Notice of Abandonment was mailed on April 5, 2005.

The file is being forwarded to Technology Center 1700 for review of the amendment, submitted April 13, 2005, *in due course*.

Telephone inquiries concerning this matter may be directed to the undersigned at (571)272-3228.

Edward J. Tannouse
Petitions Attorney
Office of Petitions/Patent
United States Patent and Trademark Office

UNITED STATES PATENT AND TRADEMARK OFFICE

Commissioner for Patents
United States Patent and Trademark Office
P.O. Box 1450
Alexandria, VA 22313-1450
www.uspto.gov

BRIAN D. VOYCE
8401 STERLING BRIDGE ROAD
CHAPEL HILL, NC 27516

COPY MAILED
JUN 3 0 2006
OFFICE OF PETITIONS

In re Application of	:	
Brad Davin	:	
Application No. 10/368,312	:	ON PETITION
Filed: February 13, 2003	:	
Attorney Docket No. N/A	:	

This is a decision on the petition under 37 CFR 1.137(b), filed June 5, 2006, to revive the above-identified application.

The petition is **GRANTED**.

This application became abandoned for failure to timely file a proper reply to the non-final Office action mailed August 27, 2004. A Notice of Non-Compliant Amendment was mailed May 23, 2005 and set a one-month period for response. Accordingly, this application became abandoned on June 24, 2005. A Notice of Abandonment was mailed on June 1, 2006.

The file is being forwarded to Technology Center 1700 for review of the amendment, submitted June 5, 2006, in due course.

Telephone inquiries concerning this matter may be directed to the undersigned at (571) 272-3228.

Edward J. Tannouse
Petitions Attorney
Office of Petitions/Patent
Office of the Deputy Commissioner
for Patent Examination Policy

UNITED STATES PATENT AND TRADEMARK OFFICE

Commissioner for Patents
United States Patent and Trademark Office
P.O. Box 1450
Alexandria, VA 22313-1450
www.uspto.gov

Clark A. Jablon
AKIN GUMP STRAUSS HAUER
& FELD L.L.P.
One Commerce Square
2005 Market Street, Suite 2200
Philadelphia, PA 19103

MAIL

AUG 0 3 2005

DIRECTOR OFFICE
TECHNOLOGY CENTER 2100

In re Application of:	)	
Wilbur H. Highleyman et al.	)	DECISION ON PETITION TO MAKE
Application No.: 10/368,315	)	SPECIAL UNDER 37 C.F.R. §1.102(c)
Filed: February 13, 2003	)	AND MPEP § 708.02 (IV):
For: METHOD OF INCREASING SYSTEM AVAILABILITY BY SPLITTING A SYSTEM	)	APPLICANT'S AGE

This is a decision on the petition, filed July 20, 2005 under 37 C.F.R. §1.102(c) and M.P.E.P. §708.02(IV): Applicant's Age, to make the above-identified application special.

A grantable petition to make special under 37 C.F.R. § 1.102 and in accordance with M.P.E.P. § 708.02, Section IV must include a showing, as by a birth certificate or the applicant's statement, that the applicant is sixty five (65) years of age or more. No fee is required for this petition.

The petition includes declaration by Wilbur H. Highleyman, one of the applicants, asserting that declarant/applicant is sixty five (65) years of age or more.

Accordingly, the petition is **GRANTED.**

The application is being forwarded to the examiner for expedited prosecution and to consider the change of inventorship.

Michelle R. Eason for

Vincent N. Trans
Special Program Examiner
Technology Center 2100
Computer Architecture, Software, and
Information Security
571-272-3613

SCAN! **Please forward case and paper to address shown below.**

SPE RESPONSE FOR CERTIFICATE OF CORRECTION

Paper No.: _____

DATE : 1/30/08

TO SPE OF : ART UNIT 3679 Stodola Daniel

SUBJECT : Request for Certificate of Correction for Appl. No.: 10/368318 Patent No.: 6964435

Please respond to this request for a certificate of correction within 7 days.

Please review the requested changes/corrections as shown in the attached certificate of correction. Please complete this form (see below) and forward it with the file to:

Certificates of Correction Branch (CofC)
South Tower - 9A22
Palm Location 7580

HENRY RANDALL
Certificates of Correction Branch
703-308-9390 ext. _____

Thank You For Your Assistance

The request for issuing the above-identified correction(s) is hereby:

Note your decision on the appropriate box.

- [x] **Approved** — All changes apply.
- [ ] **Approved in Part** — Specify below which changes do not apply.
- [ ] **Denied** — State the reasons for denial below.

Comments: The corrections are approved. However, the correction to Col. 2, line 60, should be properly listed as: "elements" should be changed to --element--.

/Daniel P. Stodola/
SPE

3679
Art Unit

UNITED STATES PATENT AND TRADEMARK OFFICE

COMMISSIONER FOR PATENTS
UNITED STATES PATENT AND TRADEMARK OFFICE
P.O. BOX 1450
ALEXANDRIA, VA 22313-1450
www.uspto.gov

FULWIDER PATTON LLP
200 OCEANGATE, SUITE 1550
LONG BEACH, CA 90802

COPY MAILED

AUG 2 2 2007

OFFICE OF PETITIONS

In re Application of
Shiro Fujiki
Application No. 10/368,326
Filed: February 18, 2003
Attorney Docket No. YAESU.63648

ON PETITION

This is a decision in response to the petition, filed April 16, 2007, to revive the above-identified application under the provisions of 37 CFR 1.137(b).

The petition is **GRANTED**.

The application became abandoned for a failure to reply in a timely manner to a non-final Office action mailed March 6, 2006. A Notice of Abandonment was mailed on December 20, 2006. On April 16, 2007, the present petition was filed.

The petition satisfies the requirements of 37 CFR 1.137(b) in that petitioner has supplied (1) the reply in the form of an amendment; (2) the petition fee of $1500; and (3) an adequate statement of unintentional delay[1].

There is no indication that the person signing the instant petition was ever given a power of attorney or authorization of agent to prosecute the above-identified application. However, in accordance with 37 CFR 1.34(a), the signature of Alexis Saenz appearing on the petition shall constitute a representation to the United States Patent and Trademark Office that he is authorized to represent the particular party on whose behalf he acts.

The application is being referred to Technology Center AU 2617 for consideration of the amendment filed April 16, 2007.

Telephone inquiries concerning this decision should be directed to the undersigned at (571) 272-3204. Inquiries relating to further prosecution should be directed to the Technology Center.

Sherry D. Brinkley
Petitions Examiner
Office of Petitions

[1] 37 CFR 1.137(b)(3) requires a statement that the entire delay in filing the required reply from the due date for the reply until the filing of a grantable petition pursuant to 37 CFR 1.137(b) was unintentional. While the statement is not made by an attorney of record, such statement is being treated as having been made as the result of a reasonable inquiry into the facts and circumstances of such delay. See 37 CFR 10.18(b) and Changes to Patent Practice and Procedure; Final Rule Notice, 62 Fed. Reg. 53131, 53178 (October 10, 1997), 1203 Off. Gaz. Pat. Office 63, 103 (October 21, 1997). In the event that such an inquiry has not been made, petitioner must make such an inquiry. If such inquiry results in the discovery that it is not correct that the entire delay in filing the required reply from the due date for the reply until the filing of a grantable petition pursuant to 37 CFR 1.137(b) was unintentional, petitioner must notify the Office.

UNITED STATES PATENT AND TRADEMARK OFFICE

Commissioner for Patents
United States Patent and Trademark Office
P.O. Box 1450
Alexandria, VA 22313-1450
www.uspto.gov

JJGJR.: 03-06

Paper No:__

J C PATENTS, INC.
4 VENTURE, SUITE 250
IRVINE CA 92618

COPY MAILED

MAR 06 2006

OFFICE OF PETITIONS

In re Application of	:	
Ho, et al.	:	DECISION
Application No. 10/368,337	:	
Filing Date: 18 February, 2003	:	
Attorney Docket No.: JCLA925	:	

This is a decision on the petition filed on 19 April, 2004, and resubmitted on 10 February, 2006, requesting withdrawal of the holding of abandonment under 37 C.F.R. §1.181.

The Office regrets the delay in addressing this matter.

NOTE: **In matters such as this in which Petitioner observes that the Office has not responded to Petitioner's filing(s), Petitioner may find it of particular value and import (to demonstrate or otherwise evidence at a later date Petitioner's diligence in attention to such matters) to calendar a Status Inquiry at six-(6-) month intervals.**

The petition as considered under 37 C.F.R. §1.181 is **GRANTED**.

BACKGROUND

The record reflects that:

- Petitioner failed to reply timely and properly to the non-final Office action mailed on 21

August, 2003, with reply due absent an extension of time on or before 21 November, 2003;

- the application went abandoned after midnight 21 November, 2003;
- the Office mailed the Notice of Abandonment on 25 March, 2004;
- on 19 April, 2004, Petitioner filed a the instant petition, with, *inter alia*, copies of the reply averred to have been submitted on 1 October, 2003, along with an Auto-Reply Facsimile Transmission;
- having received no response to the 19 April, 2004, petition, Petitioner resubmitted the petition on 10 February, 2006;
- further, a review of the Office record indicates that, while the reply averred to have been submitted in October 2003 may not have been matched with the contents of the instant file at the time the Notice of Abandonment was mailed, it has been so matched since, and Office records support Petitioner's averment.

STATUTES, REGULATIONS AND ANALYSIS

Congress has authorized the Commissioner to "revive an application if the delay is shown to the satisfaction of the Commissioner to have been "unavoidable." 35 U.S.C. §133 (1994).[1]

The regulations at 37 C.F.R. §1.137(a) and (b) set forth the requirements for a petitioner to revive a previously unavoidably or unintentionally, respectively, abandoned application under this congressional grant of authority. The language of 35 U.S.C. §133 and 37 C.F.R. §1.137(a) is clear, unambiguous, and without qualification: the delay in tendering the reply to the outstanding Office action, as well as filing the first petition seeking revival, must have been unavoidable for the reply now to be accepted on petition.[2]

---

[1] 35 U.S.C. §133 provides:
35 U.S.C. §133 Time for prosecuting application.
Upon failure of the applicant to prosecute the application within six months after any action therein, of which notice has been given or mailed to the applicant, or within such shorter time, not less than thirty days, as fixed by the Commissioner in such action, the application shall be regarded as abandoned by the parties thereto, unless it be shown to the satisfaction of the Commissioner that such delay was unavoidable.

[2] Therefore, by example, an unavoidable delay in the payment of the Filing Fee might occur if a reply is shipped by the US Postal Service, but due to catastrophic accident, the delivery is not made.

Delays in responding properly raise the question whether delays are unavoidable.[3] Where there is a question whether the delay was unavoidable, Petitioners must meet the burden of establishing that the delay was unavoidable within the meaning of 35 U.S.C. §133 and 37 C.F.R. §1.137(a).[4] And the Petitioner must be diligent in attending to the matter.[5] Failure to do so does not constitute the care required under Pratt, and so cannot satisfy the test for diligence and due care.

(By contrast, unintentional delays are those that do not satisfy the very strict statutory and regulatory requirements of unavoidable delay, and also, by definition, are not intentional.[6]))

Allegations as to the Request to
Withdraw the Holding of Abandonment

The courts have determined the construct for properly supporting a petition seeking withdrawal of a holding of abandonment.

Thus, Office records reflect that Petitioner has satisfied the showing requirements described above.

Petitioner once again is reminded that in matters such as this in which Petitioner observes that the Office has not responded to Petitioner's filing(s), Petitioner may find it of particular value and import (to demonstrate or otherwise evidence at a later date Petitioner's diligence in attention to such matters) to calendar a Status Inquiry at six- (6-) month intervals.

CONCLUSION

The petition as considered under 37 C.F.R. §1.181 hereby is **granted** and fees are waived and were not charged.

The instant file is released to Technology Center 2800 for further processing in due course.

---

[3] See: *Changes to Patent Practice and Procedure; Final Rule Notice*, 62 *Fed. Reg.* at 53158-59 (October 10, 1997), 1203 *Off. Gaz. Pat. Office* at 86-87 (October 21, 1997).

[4] See: In re Application of G, 11 USPQ2d 1378, 1380 (Comm'r Pats. 1989).

[5] See: Diligence in Filing Petitions to Revive and Petitions to Withdraw the Holding of Abandonment, 1124 Off. Gaz. Pat. Office 33 (March 19, 1991). It was and is Petitioner's burden to exercise diligence in seeking either to have the holding of abandonment withdrawn or the application revived. See 1124 Off. Gaz. Pat. Office supra.

[6] Therefore, by example, an unintentional delay in the reply might occur if the reply and transmittal form are to be prepared for shipment by the US Postal Service, but other pressing matters distract one's attention and the mail is not timely deposited for shipment.

Telephone inquiries concerning this decision may be directed to the undersigned at (571) 272-3214.

John J. Gillon, Jr.
Senior Attorney
Office of Petitions

UNITED STATES PATENT AND TRADEMARK OFFICE

Commissioner for Patents
United States Patent and Trademark Office
P.O. Box 1450
Alexandria, VA 22313-1450
www.uspto.gov

GREENBLUM & BERNSTEIN
1950 ROLAND CLARKE PLACE
RESTON VA 20191

COPY MAILED

OCT 1 8 2004

OFFICE OF PETITIONS

In re Application of :
Hiroshi Nomura et al :
Application No. 10/368,342 :
Filed: February 20, 2003 :
Attorney Docket No. P23057.DOC :

ON PETITION

This is a decision on the petition, filed October 15, 2004, under 37 CFR 1.313(c)(2) to withdraw the above-identified application from issue after payment of the issue fee.

The petition is **GRANTED**.

The above-identified application is withdrawn from issue for consideration of a submission under 37 CFR 1.114 (request for continued examination). See 37 CFR 1.313(c)(2).

Petitioner is advised that the issue fee paid on September 23, 2004 in the above-identified application cannot be refunded. If, however, the above-identified application is again allowed, petitioner may request that it be applied towards the issue fee required by the new Notice of Allowance.[1]

Telephone inquiries should be directed to the undersigned at (703) 305-8859.

The examiner of Technology Center AU 2851 will consider the request for continued examination under 37 CFR 1.114.

Karen Creasy

Karen Creasy
Petitions Examiner
Office of Petitions
Office of the Deputy Commissioner
for Patent Examination Policy

---

[1] The request to apply the issue fee to the new Notice may be satisfied by completing and returning the new Issue Fee Transmittal Form PTOL-85(b), which includes the following language thereon: "Commissioner for Patents is requested to apply the Issue Fee and Publication Fee (if any) or re-apply any previously paid issue fee to the application identified above." Petitioner is advised that, whether a fee is indicated as being due or not, the Issue Fee Transmittal Form **must** be completed and timely submitted to avoid abandonment. Note the language in bold text on the first page of the Notice of Allowance and Fee(s) Due (PTOL-85).

SPE RESPONSE FOR CERTIFICATE OF CORRECTION

Paper No.: _____

DATE : 5/18/2007

TO SPE OF : ART UNIT 2800 (2851)

SUBJECT : Request for Certificate of Correction on Patent No.: 6,978,089
Attn: Chris Mahoney

A response is requested with respect to the accompanying request for a certificate of correction.

Please complete this form and return with file *(PFW), within 7 days to:
Certificates of Correction Branch – 2900 South Tower ste.9A43A
Palm location **7580** or forward ***(IFW)** to scanning using document code **COCX**.

***Ok to enter changes to claim 55 as requested in COCIN?**

Ernest C. White, LIE (703) 308-9390x122
Certificates of Correction Branch

Thank You For Your Assistance

The request for issuing the above-identified correction(s) is hereby:
Note your decision on the appropriate box.

- ☐ **Approved** — **All** changes apply.
- ☐ **Approved in Part** — Specify below which changes **do not** apply.
- ☒ **Denied** — State the reasons for denial below.

Comments:

The proposed changes to the claim affect the scope of patent claim 55. Thus the scope ~~and~~ ~~[illegible]~~ of the patent would be affected. See MPEP 1481.

Patrick Assouad

PATRICK ASSOUAD
SUPERVISORY PATENT EXAMINER

2862

SPE — Art Unit

PTOL-306 (REV. 7/03)

U.S. DEPARTMENT OF COMMERCE Patent and Trademark Office

UNITED STATES PATENT AND TRADEMARK OFFICE

Commissioner for Patents
United States Patent and Trademark Office
P.O. Box 1450
Alexandria, VA 22313-1450
www.uspto.gov

COPY MAILED

FEB 07 2007

OFFICE OF PETITIONS

HARNESS, DICKEY & PIERCE, P.L.C.
P.O. BOX 8910
RESTON VA 20195

In re Application of Young-Min Min et al Application No. 10/368,344 Filed: February 20, 2003 Attorney Docket No. 9862-000010/US	DECISION GRANTING PETITION UNDER 37 CFR 1.137(b)

This is a decision on the petition under 37 CFR 1.137(b), filed October 10, 2006, to revive the above-identified application.

The petition is **GRANTED**.

The petition satisfies the conditions for revival pursuant to the provisions of 37 CFR 1.137(b) in that (1) the reply in the form of the issue fee and publication fee; (2) the petition fee; and (3) the required statement of unintentional delay have been received. Accordingly, the reply to the Notice of Allowance of December 16, 2005, is accepted as having been unintentionally delayed.

Telephone inquiries concerning this decision should be directed to the undersigned at (571) 272-3208.

This matter is being referred to Patent Publication.

Karen Creasy

Karen Creasy
Petitions Examiner
Office of Petitions

OIPE
APR 24 2009
PATENT & TRADEMARK OFFICE

cdjc

PATENT

IN THE UNITED STATES PATENT AND TRADEMARK OFFICE

Applicants: Young-Min MIN et al.

Application No.: **10/368,344**

Patent No.: **7,193,369 B2**

Group: 2821

Filed: February 20, 2003

Examiner: Thuy V. Tran

Confirmation No.: 4167

For: METHOD AND APPARATUS FOR GENERATING GAS PLASMA, GAS COMPOSITION FOR GENERATING PLASMA AND METHOD FOR MANUFACTURING SEMICONDUCTOR DEVICE USING THE SAME

Atty. Dkt. No.: 9862-000010/US

Certificate
APR 28 2009
of Correction

Customer Service Window
Randolph Building
401 Dulany Street
Alexandria, VA 22314
Mail Stop **Certificate of Correction Branch**

April 24, 2009

REQUEST FOR CORRECTION OF ASSIGNEE UNDER 37 C.F.R. §1.323 and § 3.81(b)

Dear Sir:

In response to the Patent Office communication dated April 14, 2009 (copy attached), denying Applicants' Request for Certificate of Correction, it is respectfully requested that a Certificate of Correction be issued for the above-identified patent based on the following information.

On February 20, 2003, Applicants filed an assignment assigning the above patent application to "Samsung Electronics Co., Ltd." and "New Power

Plasma Co., Ltd." Applicants submit that the assignment was submitted for recordation under 37 C.F.R. §3.11 before issuance of U.S. Patent No. 7,193,369. However, Applicants inadvertently failed to list the second Assignee on the Recordation Cover Sheet and the Issue Fee Transmittal.

Therefore, on January 9, 2008, Applicants requested a corrected Recordation. Attached is a copy of the corrected Recordation listing Samsung Electronics Co., Ltd., and New Power Plasma Co., Ltd. as assignees, recorded on Reel 020366/0107.

In view of the above, Applicants respectfully request that a Certificate of Correction be issued to add (with the additions in bold and underlined):

(73) Assignee**s**: Samsung Electronics Co., Ltd., Gyeonggi-do (KR); **New Power Plasma Co., Ltd., Seoul (KR)**.

Attached is a Certificate of Correction PTO/SB/44 Form.

The processing fee of $130.00 as set forth in 37 C.F.R. §1.17(i) and the Certificate of Correction fee of $100.00 as set forth in 37 C.F.R. 1.20(a) was paid by check number 02952 on January 9, 2008 (copy attached).

If there are any questions regarding the application, the Examiner is invited to contact the undersigned at the number given below.

If necessary, the Commissioner is hereby authorized in this, concurrent, and future replies to charge payment or credit any overpayment

to Deposit Account No. 08-0750 for any additional fees required under 37 C.F.R. §§ 1.16 or 1.17; particularly, extension of time fees.

Respectfully submitted,

HARNESS, DICKEY & PIERCE, PLC

By_____

Gary D. Yacura, Reg. No. 35,416

P.O. Box 8910
Reston, VA 20195
(703) 668-8000

CDW
GDY/CDW:ljs

Attachments: Copy of check # 02952 for $230.00
Certificate of Correction PTO/SB/44 Form (one (1) sheet)
Corrected Recordation
Copy of Denial of Request for Certificate of Correction

OIPE IAP97
APR 24 2009
PATENT & TRADEMARK OFFICE

THIS DOCUMENT HAS LINEMARK™ LINES IN THE PAPER • HOLD TO LIGHT TO VIEW

HARNESS, DICKEY & PIERCE, P.L.C.
ATTORNEYS AND COUNSELORS
11730 PLAZA AMERICA DRIVE, SUITE 600
RESTON, VA 20190

SUNTRUST BANK ACH RT. 061000104

02952

65-270/550

TWO HUNDRED THIRTY AND 00/100 DOLLARS

AY:

NUMBER	DATE	AMOUNT
2952	01/09/2008	$**********230.00

O THE
RDER

DIRECTOR OF THE U.S. PATENT
AND TRADEMARK OFFICE

VOID AFTER 90 DAYS

8862-0000101/5 (S/N 10/368,344)

SECURITY FEATURES INCLUDED. DETAILS ON BACK.

⑈002952⑈ ⑆055002707⑆ 100004390511 5⑈

PTO/SB/44 (04-04)
Approved for use through 04/30/2007. OMB 0651-0033
U.S. Patent and Trademark Office; U.S. DEPARTMENT OF COMMERCE
Under the Paperwork Reduction Act of 1995, no persons are required to respond to a collection of information unless it displays a valid OMB control number.
(Also Form PTO-1050)

UNITED STATES PATENT AND TRADEMARK OFFICE

CERTIFICATE OF CORRECTION

PATENT NO.:	7,193,369 B2
APPLICATION NO.:	10/368,344
ISSUE DATE:	March 20, 2007
INVENTOR(S) :	Young-Min MIN, Dae-Kyu CHOI, Do-In BAE, Yun-Sik YANG, Wan-Goo HWANG and Jin-Man KIM

It is certified that error appears in the above-identified patent and that said Letters Patent are hereby corrected as shown below:

Assignees: Samsung Electronics Co., Ltd.
Gyeonggi-do (KR)
New Power Plasma Co., Ltd.
Seoul (KR)

MAILING ADDRESS OF SENDER: P.O. Box 8910
Reston, VA 20195

PATENT NO. 7,193,369 B2

No. of additional copies

This collection of information is required by 37 CFR 1.322, 1.323, and 1.324. The information is required to obtain or retain a benefit by the public which is to file (and by the USPTO to process) an application. Confidentiality is governed by 35 U.S.C. 122 and 37 CFR 1.14. This collection is estimated to take 1.0 hour to complete, including gathering, preparing, and submitting the completed application form to the USPTO. Time will vary depending upon the individual case. Any comments on the amount of time you require to complete this form and/or suggestions for reducing this burden, should be sent to the Chief Information Officer, U.S. Patent and Trademark Office, U.S. Department of Commerce, P.O. Box 1450, Alexandria, VA 22313-1450. DO NOT SEND FEES OR COMPLETED FORMS TO THIS ADDRESS. **SEND TO: Attention Certificate of Corrections Branch, Commissioner for Patents, P.O. Box 1450, Alexandria, VA 22313-1450.**

If you need assistance in completing the form, call 1-800-PTO-9199 and select option 2.

7

OIPE IAP97
APR 24 2009
PATENT & TRADEMARK OFFICE

UNITED STATES PATENT AND TRADEMARK OFFICE

UNDER SECRETARY OF COMMERCE FOR INTELLECTUAL PROPERTY AND
DIRECTOR OF THE UNITED STATES PATENT AND TRADEMARK OFFICE

JANUARY 15, 2008

PTAS

103474808A

HARNESS, DICKEY & PIERCE, P.L.C.
P.O. BOX 8910
RESTON, VA 20195

UNITED STATES PATENT AND TRADEMARK OFFICE
NOTICE OF RECORDATION OF ASSIGNMENT DOCUMENT

THE ENCLOSED DOCUMENT HAS BEEN RECORDED BY THE ASSIGNMENT DIVISION OF THE U.S. PATENT AND TRADEMARK OFFICE. A COMPLETE MICROFILM COPY IS AVAILABLE AT THE ASSIGNMENT SEARCH ROOM ON THE REEL AND FRAME NUMBER REFERENCED BELOW.

PLEASE REVIEW ALL INFORMATION CONTAINED ON THIS NOTICE. THE INFORMATION CONTAINED ON THIS RECORDATION NOTICE REFLECTS THE DATA PRESENT IN THE PATENT AND TRADEMARK ASSIGNMENT SYSTEM. IF YOU SHOULD FIND ANY ERRORS OR HAVE QUESTIONS CONCERNING THIS NOTICE, YOU MAY CONTACT THE EMPLOYEE WHOSE NAME APPEARS ON THIS NOTICE AT 571-272-3350. PLEASE SEND REQUEST FOR CORRECTION TO: U.S. PATENT AND TRADEMARK OFFICE, MAIL STOP: ASSIGNMENT SERVICES BRANCH, P.O. BOX 1450, ALEXANDRIA, VA 22313.

RECORDATION DATE: 01/09/2008

REEL/FRAME: 020366/0107
NUMBER OF PAGES: 5

BRIEF: CORRECTIVE ASSIGNMENT TO ADD A SECOND ASSIGNEE TO THE DOCUMENT PREVIOUSLY RECORDED ON REEL 013795, FRAME 0150. ASSIGNORS HEREBY CONFIRM THE ASSIGNMENT OF THE ENTIRE INTEREST.
DOCKET NUMBER: 9862-000010/US

ASSIGNOR:
MIN, YOUNG-MIN — DOC DATE: 01/27/2003

ASSIGNOR:
CHOI, DAE-KYU — DOC DATE: 01/27/2003

JAN 18 2008

ASSIGNOR:
BAE, DO-IN — DOC DATE: 01/27/2003

ASSIGNOR:
YANG, YUN-SIK — DOC DATE: 01/27/2003

ASSIGNOR:
HWANG, WAN-GOO — DOC DATE: 01/27/2003

REVIEWED BY DOCKET
Atty JACKW
DKT Verify
Matter No.

ASSIGNOR:
KIM, JIN-MAN

DOC DATE: 01/27/2003

ASSIGNEE:
SAMSUNG ELECTRONICS CO., LTD.
416, MAETAN-DONG, SUWON-SI
GYEONGGI-DO, REPUBLIC OF KOREA

ASSIGNEE:
NEW POWER PLASMA CO., LTD.
#506-7, AMSA2-DONG, GANGDONG-GU
SEOUL, REPUBLIC OF KOREA

SERIAL NUMBER: 10368344
PATENT NUMBER: 7193369
TITLE: METHOD FOR GENERATING GAS PLASMA

FILING DATE: 02/20/2003
ISSUE DATE: 03/20/2007

JEFFREY OLSEN, EXAMINER
ASSIGNMENT SERVICES BRANCH
PUBLIC RECORDS DIVISION

UNITED STATES PATENT AND TRADEMARK OFFICE

Commissioner for Patents
United States Patent and Trademark Office
P.O. Box 1450
Alexandria, VA 22313-1450
www.uspto.gov

OIPE IAP97
APR 24 2009
PATENT & TRADEMARK OFFICE

RECEIVED
APR 16 2009
HARNESS, DICKEY & PIERCE

April 14, 2009

Patent No. : 7,193,369 B2
Application No : 10/368,344
Inventor(s) : Min, et al.
Issued : March 20, 2007
Title : **METHOD FOR GENERATING GAS PLASMA**

0Re: Request for Certificate of Correction

Consideration has been given your request for the issuance of a certificate of correction for the above-identified patent under the provisions of Rule(s) 1.322 and/or 1.323.

Assignees' names and addresses (assignment data) printed in a patent, are based *solely* on information supplied in the appropriate space for identifying the assignment data, i.e., item 3 of the Issue Fee Transmittal Form PTOL-85B. Granting of a request under 37 CFR 3.81(b) is required to correct applicant's error providing ***incorrect or erroneous*** assignment data, *before* issuance of a Certificate of Correction, under 37 CFR 1.323 *(see Manual of Patent Examining Procedures (M.P.E.P) Chp.1400, sect. 1481).* This procedure is required *at any time after the issue fee is paid*, including after issuance of the patent.

In view of the foregoing, your request is hereby denied.

A request to correct the Assignee under 37 CFR 3.81(b) should include:

A. **the processing fee set forth in 37 CFR 1.117(h) (currently $130);**
B. a statement that the failure to include the correct assignee name on the PTOL-85B was inadvertent; and
C. a copy of the Notice of Recordation of Assignment Document, reflecting the reel and frame number where the assignment(s) is recorded and/or reflecting proof of *the date* the assignment was submitted for recordation.

In the Request, Applicant(s) may request that the file be forwarded to Certificates of Correction Branch, for issuance of a Certificate of Correction, if the Request is granted.

Any request under 37 CFR 3.81(b) should be directed to the following address or facsimile number:

By mail: Mail Stop PETITIONS
Commissioner for Patents
Post Office Box 1450
Alexandria, VA 22313-1450

Matter no. 9862-000010/US
Action Due Date 4/23/09 Final Date
Action File Cert of Corr.
Atty GDY/CPW DKT/Verify KO SHW

By hand: Customer Service Window
Mail Stop Petitions
Randolph Building
401 Dulany Street
Alexandria, VA 22314

By fax: (571) 273-8300
ATTN: Office of Petitions

If a fee (currently $100) was previously submitted for consideration of a Request for Certificate of Correction, under CFR 1.323, to correct assignment data, no additional fee is required.

Valerie Jackson
For Mary F. Diggs
Decisions & Certificates
of Correction Branch
(703) 308-9390 ext. 114

P.O. Box 8910
Reston, VA 20195

vj/MFD

UNITED STATES PATENT AND TRADEMARK OFFICE

Commissioner for Patents
United States Patent and Trademark Office
P.O. Box 1450
Alexandria, VA 22313-1450
www.uspto.gov

dss

Mailed: 1-23-06

In re application of	:	
Yasuki Ohtawa et al.	:	DECISION ON
Serial No. 10/368,374	:	PETITION
Filed: February 20, 2003	:	
For: SOFTENER COMPOSITION	:	

This is a response to the REQUEST TO WITHDRAW HOLDING OF ABANDONMENT, filed October 18, 2005. The request asks that the abandonment, as set forth in the Notice of Abandonment of October 12, 2005, be withdrawn since the applicant did timely file a response with the proper extension of time on October 05, 2005.

DECISION

The instant request has been accepted as a petition to withdraw the holding of abandonment under the provisions of 37 CFR 1.181 (no fee) - no abandonment-in-fact. A review of the USPTO application file reveals that applicant's response, the AMENDMENT and PETITION FOR EXTENSION OF TIME, was properly filed on October 05, 2005 in view of the fact that the originally filed papers having a Patent and Trademark Office date stamp of October 05, 2005, thereon have been located in the USPTO application file. Accordingly, any holding of abandonment is hereby vacated, and the application has been returned to pending status.

The application shall be forwarded to the examiner for processing and consideration of the papers filed October 05, 2005.

The Petition is **GRANTED**.

Jacqueline M. Stone

Jacqueline Stone, Director
Technology Center 1700
Chemical and Materials Engineering

John W. Bailey
Birch, Stewart, Kolasch & Birch, LLP
8110 Gatehouse Rd., Suite 100 East
P.O. Box 747
Falls Church, VA 22040-0747

1036835

SPE RESPONSE FOR CERTIFICATE OF CORRECTION

DATE : 22206

Paper No.: _____

TO SPE OF : ART UNIT 2852

SUBJECT : Request for Certificate of Correction on Patent No.: 6947686B2

A response is requested with respect to the accompanying request for a certificate of correction.

Please complete this form and return with file, within 7 days to:
Palm location **7580, Certificates of Correction Branch – South Tower – 9A22**
If response is for an IFW, **return to employee (named below) via PUBSCofC Team in MADRAS.**
With respect to the change(s) requested, correcting Office and/or Applicant's errors, should the patent read as shown in the certificate of correction (COCIN)? No new matter should be introduced, nor should the scope or meaning of the claims be changed.

Thank You For Your Assistance

ROCHAUN JOHNSON
Certificates of Correction Branch
Tel. No. 703-308-9390 EXT 119

The request for issuing the above-identified correction(s) is hereby:
Note your decision on the appropriate box.

- ☒ **Approved** — All changes apply.
- ☐ **Approved in Part** — Specify below which changes do not apply.
- ☐ **Denied** — State the reasons for denial below.

Comments:

SPE

2852
Art Unit

UNITED STATES PATENT AND TRADEMARK OFFICE

COMMISSIONER FOR PATENTS
UNITED STATES PATENT AND TRADEMARK OFFICE
P.O. BOX 1450
ALEXANDRIA, VA 22313-1450
www.uspto.gov

STEIN, MCEWEN & BUI, LLP
1400 EYE STREET, NW
SUITE 300
WASHINGTON, DC 20005

COPY MAILED
JUN 30 2006
OFFICE OF PETITIONS

In re Application of :
Lee et al. :
Application No. 10/368,385 :
Deposited: February 20, 2003 : ON PETITION
Title of Invention: :
YELLOW ZNS-BASED PHOSPHOR, :
PROCESS OF PREPARING THE SAME :
AND DISPLAY DEVICE USING THE :
PHOSPHOR :

This is a decision on the Petition to Withdraw Holding of Abandonment, filed June 7, 2006. The petition is properly treated under 37 CFR 1.181.

The petition is **granted.**

The above-identified application became abandoned for failure to timely reply to the non-final Office action, mailed October 24, 2005. The Office action set a three (3) month period for reply, and provided for extensions of time under 37 CFR 1.136(a). No reply having been received, the application became abandoned January 25, 2005. A Notice of Abandonment was mailed on June 5, 2006.

Applicant's Assertion

Applicant asserts that a timely reply to the Notice, in the form of an amendment, was timely filed and received in the Office. In support of this assertion, Applicant provides a copy of the amendment and a copy of Applicant's return-receipt postcard acknowledging receipt by this Office of, *inter alia*, an amendment and fee transmittal on January 23, 2006.

Evidence of receipt of any correspondence filed in the Patent and Trademark Office can be obtained by submitting a self-addressed postcard properly itemizing and identifying the paper or papers being filed. Upon receipt of the correspondence, the Patent and Trademark Office will check the listing on the post card against the papers submitted, making sure that all items listed are present and will then stamp the postcard with an Official date stamp and place the postcard in the outgoing mail. "A postcard receipt which itemizes and properly identifies the papers which are being filed serves as *prima facie* evidence of receipt in the PTO of all items listed thereon by the PTO." MPEP § 503.

In view of the above, the holding of abandonment of the above-identified application is hereby withdrawn. The petition fee has been refunded to Applicant's deposit account as authorized in the instant petition[1].

The application is being referred to Technology Center Art Unit 1755 for continued processing in due course.

Telephone inquiries should be directed to the undersigned at (571) 272-3232.

Derek L. Woods
Attorney
Office of Petitions

[1]Applicant is advised that the petition fee has increased to $400.00.

UNITED STATES PATENT AND TRADEMARK OFFICE

Commissioner for Patents
United States Patent and Trademark Office
P.O. Box 1450
Alexandria, VA 22313-1450
www.uspto.gov

MAIL

NOV 2 6 2004

DIRECTOR OFFICE
TECHNOLOGY CENTER 2100

ANTONELLI, TERRY, STOUT & KRAUS, LLP
1300 NORTH SEVENTEENTH STREET
SUITE 1800
ALEXANDRIA, VIRGINIA 22209-9889

In re Application of: Katsuragi, et al.
Application No. 10/368,405
Filed: February 20, 2003
For: DISK ARRAY SYSTEM HAVING AN EXTENDED LOAD BALANCING FUNCTION

DECISION ON PETITION
TO MAKE SPECIAL
(ACCELERATED EXAMINATION)
UNDER M.P.E.P. §708.02 (VIII)

This is a response to the petition filed August 11, 2004, under 37 C.F.R. §1.102(d) and M.P.E.P. §708.02 (VIII): Accelerated Examination, to make the above-identified application special.

The Petition is **DISMISSED**.

M.P.E.P. §708.02, Section VIII which sets out the prerequisites for a grantable petition for Accelerated Examination under 37 C.F.R. §1.102(d) states in relevant part:

A new application (one which has not received any examination by the examiner) may be granted special status provided that applicant (and this term includes applicant's attorney or agent) complies with each of the following items:

(a) Submits a petition to make special accompanied by the fee set forth in **37 CFR 1.17(h)**;

(b) Presents all claims directed to a single invention, or if the Office determines that all the claims presented are not obviously directed to a single invention, will make an election without traverse as a prerequisite to the grant of special status;

(c) Submits a statement(s) that a pre-examination search was made, listing the field of search by class and subclass, publication, Chemical Abstracts, foreign patents, etc. The pre-examination search must be directed to the invention as claimed in the application for which special status is requested. A search made by a foreign patent office satisfies this requirement;

(d) Submits one copy each of the references deemed most closely related to the subject matter encompassed by the claims if said references are not already of record; and

(e) Submits a detailed discussion of the references, which discussion points out, with the particularity required by 37 CFR 1.111 (b) and (c), how the claimed subject matter is patentable over the references.

The petition filed August 11, 2004 fails to adequately meet requirement (e) of the criteria set forth above. With respect to requirement (e), all of the claims do not recite the particularly distinct feature relied upon in applicant's arguments. Specifically, claim 7 does not recite the distinct feature of "monitoring the use frequency of each ECC group and concatenating two or more proper ECC groups such that load balancing capability for the disk drive groups can be improved without lowering reliability of the ECC groups". Petitioner should ensure that the above discussion is directed to how the language of **each of the independent claims** are specifically distinguishable and patentable from the references provided in requirement (d) above.

Further, applicant may wish to consider filing an Information Disclosure Statement (PTO-1449 or PTO-SB08A) to ensure consideration of the references cited in the petition by the assigned examiner.

Petition to Make Special **DISMISSED**.

Petitioner is given one opportunity to perfect the petition. Any request for reconsideration must be filed within TWO MONTHS of the mail date of this decision.

Until the renewed petition is submitted, the application will be returned to the examiner's docket to await treatment on the merits in the normal order of examination.

11/19/04

Brian L. Johnson
Special Program Examiner
Technology Center 2100
Computer Architecture, Software and Information Security
571-272-3595

MBS

UNITED STATES PATENT AND TRADEMARK OFFICE

Commissioner for Patents
United States Patent and Trademark Office
P.O. Box 1450
Alexandria, VA 22313-1450
www.uspto.gov

MAIL

APR 1 8 2005

DIRECTOR OFFICE
TECHNOLOGY CENTER 2100

MATTINGLY, STANGER & MALUR, P.C.
1800 DIAGONAL ROAD
SUITE 370
ALEXANDRIA, VA 22314

In re Application of: KATSURAGI, et al.
Application No. 10/368,405
Filed: February 20, 2003
For: DISK ARRAY SYSTEM HAVING AN EXTENDED LOAD BALANCING FUNCTION

DECISION ON PETITION TO MAKE SPECIAL (ACCELERATED EXAMINATION) UNDER M.P.E.P. §708.02 (VIII)

This is a response to the Request for Reconsideration filed January 27, 2005, on the Petition to make Special under 37 C.F.R. § 102(d) and M.P.E.P. §708.02 (VIII): Accelerated Examination, originally filed on August 11, 2004 and dismissed on November 26, 2004.

The Reconsideration of the Petition is **DENIED**.

M.P.E.P. §708.02, Section VIII, which sets out the prerequisites for a grantable petition for Accelerated Examination under 37 C.F.R. §1.102(d) states in relevant part:

A new application (one which has not received any examination by the examiner) may be granted special status provided that applicant (and this term includes applicant's attorney or agent) complies with each of the following items:

(a) Submits a petition to make special accompanied by the fee set forth in **37 CFR 1.17(h)**;

(b) Presents all claims directed to a single invention, or if the Office determines that all the claims presented are not obviously directed to a single invention, will make an election without traverse as a prerequisite to the grant of special status;

(c) Submits a statement(s) that a pre-examination search was made, listing the field of search by class and subclass, publication, Chemical Abstracts, foreign patents, etc. The pre-examination search must be directed to the invention as claimed in the application for which special status is requested. A search made by a foreign patent office satisfies this requirement;

(d) Submits one copy each of the references deemed most closely related to the subject matter encompassed by the claims if said references are not already of record; and

(e) Submits a detailed discussion of the references, which discussion points out, with the particularity required by 37 CFR 1.111 (b) and (c), how the claimed subject matter is patentable over the references.

The initial decision mailed November 22, 2004, was dismissed on the ground that Petitioner's submission failed to adequately meet requirement (e) of the criteria set forth above. Petitioner's submission was deficient in that it alleged that the prior art of record does not disclose certain features. However, it was noted that the particular distinct feature that was relied upon was not recited in independent claim 7.

In the Request for Reconsideration filed January 27, 2005, Petitioner repeated similar distinct features as recited in the original Petition, which are not taught or suggested by the references. The only difference in the Request for Reconsideration is the use of the term "disk drive group" instead of "ECC group," as recited in the original Petition. However, it is deemed that this Request for Reconsideration still fails to adequately meet requirement (e) of the criteria set forth above.

With respect to requirement (e), a complete detailed discussion of the (aforementioned most closely related) references has not been provided with the necessary specificity required under 37 CFR 1.111 (b) and (c). Specifically, Petitioner should ensure that particular features **in each of the independent claims** as asserted to be distinguishable over the references are recited accordingly in their respective claims. It is noted that at least claims 1 and 7 do not recite the distinct feature of concatenating disk drive groups such that "load balancing capability for the disk drive groups can be improved without lowering reliability of the disk drive groups."

Accordingly, the Reconsideration of Petition is **DENIED**.

The present application will be returned to the examiner's docket to await treatment on the merits in the normal order of examination.

Brian L. Johnson
Special Program Examiner 4/13/05
Technology Center 2100
Computer Architecture, Software and Information Security
571-272-3595

SDL: 04/11/05

SPE RESPONSE FOR CERTIFICATE OF CORRECTION

DATE : 2/5/05

Paper No.: —

TO SPE OF : ART UNIT 1761

SUBJECT : Request for Certificate of Correction on Patent No.: 6827964 B2

A response is requested with respect to the accompanying request for a certificate of correction.

Please complete this form and return with file, within **7** days to:
Certificates of Correction Branch - PK 3-915
Palm location **7580** - Tel. No. 305-8309

With respect to the change(s) requested, correcting Office and/or Applicant's errors, should the patent read as shown in the certificate of correction? No new matter should be introduced, nor should the scope or meaning of the claims be changed.

Virginia Tolbert
Certificates of Correction Branch

Thank You For Your Assistance

The request for issuing the above-identified correction(s) is hereby:
Note your decision on the appropriate box.

- ☒ **Approved** — All changes apply.
- ☐ **Approved in Part** — Specify below which changes **do not** apply.
- ☐ **Denied** — State the reasons for denial below.

Comments:

Carolyn Paden
CAROLYN PADEN 1761
PRIMARY EXAMINER 10-3-05

MILTON I. CANO
SUPERVISORY PATENT EXAMINER
TECHNOLOGY CENTER 1700
SPE

1761
Art Unit

UNITED STATES PATENT AND TRADEMARK OFFICE

COMMISSIONER FOR PATENTS
UNITED STATES PATENT AND TRADEMARK OFFICE
P.O. BOX 1450
ALEXANDRIA, VA 22313-1450
www.uspto.gov

COPY MAILED
NOV 07 2006
OFFICE OF PETITIONS

SUPERVISOR, PATENT PROSECUTION SERVICES
PIPER RUDNICK LLP
1200 NINETEENTH STREET, N.W.
WASHINGTON, DC 20036-2412

In re Application of
Alan N. Howard, et al.
Application No. 10/368,427
Filed: February 20, 2003
Attorney Docket No. 9572-008-57 CIP

ON PETITION

This is a decision on the petition under 37 CFR 1.137(b) to revive the above-identified application, filed August 21, 2006.

The petition is GRANTED.

The application became abandoned for failure to pay the issue fee on or before August 18, 2006. A Notice of Abandonment was mailed on August 29, 2006. Receipt is acknowledged of the requisite issue/publication fee on August 21, 2006.

The application file does not indicate a change of address has been filed in this case, although the address given on the petition differs from the address of record. If appropriate, a change of address should be filed in this case in accordance with MPEP 601.03. A courtesy copy of this decision is being mailed to the address noted on the petition. However, until otherwise instructed, all future correspondence regarding this application will be mailed solely to the address of record.

The application is being forwarded to Publishing Division.

Telephone inquires related to this decision should be directed to the undersigned at (571) 272-3204. Telephone inquiries related to processing at Publishing Division should be directed to (571) 272-4200.

Sherry D. Brinkley
Petitions Examiner
Office of Petitions

cc: Perry Van Over
Manelli, Denison & Selter PLLC
2000 M Street, NW, Suite 700
Washington, DC 20036- 3307

UNITED STATES PATENT AND TRADEMARK OFFICE

Commissioner for Patents
United States Patent and Trademark Office
P.O. Box 1450
Alexandria, VA 22313-1450
www.uspto.gov

BINGHAM MCCUTCHEN LLP
THREE EMBARCADERO CENTER
SAN FRANCISCO CA 94111-4067

COPY MAILED

APR 09 2008

OFFICE OF PETITIONS

In re reissue Application of	:	
Huang, et al.	:	
Application No. 10/368,429	:	DECISION REFUSING STATUS
Filed: February 20, 2003	:	UNDER 37 CFR 1.47(a)
Patent No. 7,019,952	:	
Issued: March 28, 2006	:	

This is in response to the petition under 37 CFR 1.47(a), filed March 14, 2008.

The petition under 37 CFR 1.47(a) is **DISMISSED**.

Rule 47 applicant is given TWO MONTHS from the mailing date of this decision to reply, correcting the below-noted deficiencies. Any reply should be entitled "Request for Reconsideration of Petition Under 37 CFR 1.47(a)," and should only address the deficiencies noted below, except that the reply may include an oath or declaration executed by the non-signing inventor. **Failure to respond will result in abandonment of the application.** Any extensions of time will be governed by 37 CFR 1.136(a).

A grantable petition under 37 CFR 1.47(a) requires: (1) proof that the non-signing inventor cannot be reached after diligent effort or refuses to sign the oath or declaration after having been presented with the application papers (specification, claims, drawings, oath or declaration); (2) an acceptable oath or declaration in compliance with 37 CFR 1.63; (3) the petition fee; and (4) a statement of the last known address of the non-signing inventor. Rule 47 applicant has not met requirement (1) above.

Rule 47 applicant has not demonstrated that the non-signing inventor has refused to sign the declaration. According to petitioner, inventor Li was presented with the reissue application papers on March 10, 2008. Not having received a response from Li, Rule 47 applicant filed the instant petition four days later. However, absent an express refusal to sign, four days is not a long enough period of time to support the conclusion that Li has refused to sign the declaration.

If Li has still not signed the declaration as of the mail date of this decision, Rule 47 applicant can state such for the record.

Further correspondence with respect to this matter should be addressed as follows:

By mail: Mail Stop Petitions
Commissioner for Patents
P.O. Box 1450
Alexandria VA 22313-1450

By FAX: (571)273-8300
Attn: Office of Petitions

Telephone inquiries related to this decision may be directed to the undersigned at (571)272-3207.

Cliff Congo
Petitions Attorney
Office of Petitions

cc: Andrews Kurth LLP
1350 I St, NW, Suite 1100
Washington DC 20005

UNITED STATES PATENT AND TRADEMARK OFFICE

Commissioner for Patents
United States Patent and Trademark Office
P.O. Box 1450
Alexandria, VA 22313-1450
www.uspto.gov

BINGHAM MCCUTCHEN LLP
THREE EMBARCADERO CENTER
SAN FRANCISCO CA 94111-4067

COPY MAILED
JUN 30 2008
OFFICE OF PETITIONS

In re reissue Application of	:	
Huang, et al.	:	
Application No. 10/368,429	:	DECISION NOTING JOINDER
Filed: February 20, 2003	:	OF INVENTOR AND PETITION
Patent No. 7,019,952	:	UNDER 37 CFR 1.47(a) MOOT
Issued: March 28, 2006	:	

This is in response to the petition under 37 CFR 1.47(a), filed June 9, 2008.

The petition under 37 CFR 1.47(a) is **DISMISSED** as moot.

In view of the **joinder** of previously non-singing inventor Li, further consideration under 37 CFR 1.47(a) is not necessary and the petition is considered to be **moot**. This application does not have any Rule 1.47(a) status and no such status should appear on the file wrapper. This application need not be returned to this Office for further consideration under 37 CFR 1.47(a).

The matter is being forwarded to Group Art Unit 2836 for consideration of the reissue application.

Telephone inquiries related to this decision may be directed to the undersigned at (571)272-3207.

Cliff Congo
Petitions Attorney
Office of Petitions

PTO/SB/66 (03-09)
Approved for use through 03/31/2012. OMB 0651-0016
U.S. Patent and Trademark Office: U.S. DEPARTMENT OF COMMERCE
Under the Paperwork Reduction Act of 1995, no persons are required to respond to a collection of information unless it displays valid OMB control number.

PETITION TO ACCEPT UNINTENTIONALLY DELAYED PAYMENT OF MAINTENANCE FEE IN AN EXPIRED PATENT (37 CFR 1.378(c))

Patent Number	Issue Date (YYYY-MM-DD)	Application Number	Filing Date (YYYY-MM-DD)	Docket Number (if applicable)
7019952	2006-03-28	10/368,429	2003-02-20	20020.0006-00

CAUTION: Maintenance fee (and surcharge, if any) payment must correctly identify: (1) the patent number and (2) the application number of the actual U.S. application leading to issuance of that patent to ensure the fee(s) is/are associated with the correct patent. 37 CFR 1.366(c) and (d).

SMALL ENTITY
☐ Patentee claims, or has previously claimed, small entity status. See 37 CFR 1.27.

LOSS OF ENTITLEMENT TO SMALL ENTITY STATUS
☒ Patentee is no longer entitled to small entity status. See 37 CFR 1.27(g)

NOT Small Entity		Small Entity	
Fee	Code	Fee	Code
◉ 3 ½ year	(1551)	○ 3 ½ year	(2551)
○ 7 ½ year	(1552)	○ 7 ½ year	(2552)
○ 11 ½ year	(1553)	○ 11 ½ year	(2553)

SURCHARGE
The surcharge required by 37 CFR 1.20(i)(2) (Fee Code 1558) must be paid as a condition of accepting unintentionally delayed payment of the maintenance fee.

MAINTENANCE FEE (37 CFR 1.20(e)-(g))
The appropriate maintenance fee must be submitted with this petition.

STATEMENT
THE UNDERSIGNED CERTIFIES THAT THE DELAY IN PAYMENT OF THE MAINTENANCE FEE TO THIS PATENT WAS UNINTENTIONAL

PETITIONER(S) REQUEST THAT THE DELAYED PAYMENT OF THE MAINTENANCE FEE BE ACCEPTED AND THE PATENT REINSTATED

THIS PORTION MUST BE COMPLETED BY THE SIGNATORY OR SIGNATORIES

37 CFR 1.378(d) states: "Any petition under this section must be signed by an attorney or agent registered to practice before the Patent and Trademark Office, or by the patentee, the assignee, or other party in interest."

I certify, in accordance with 37 CFR 1.4(d)(4) that I am

◉ An attorney or agent registered to practice before the Patent and Trademark Office

○ A sole patentee

○ A joint patentee; I certify that I am authorized to sign this submission on behalf of all the other patentees.

○ A joint patentee; all of whom are signing this e-petition

○ The assignee of record of the entire interest

Patent Practitioner			
A signature of the applicant or representative is required in accordance with 37 CFR 1.33 and 10.18. Please see 37 CFR 1.4(d) for the form of the signature			
Signature	/Krystyna Colantoni/	Date (YYYY-MM-DD)	2010-05-18
Name	Krystyna Colantoni	Registration Number	60226

This collection of information is required by 37 CFR 1.378(c). The information is required to obtain or retain a benefit by the public which is to file (and by the USPTO to process) an application. Confidentiality is governed by 35 U.S.C. 122 and 37 CFR 1.11 and 1.14. This collection is estimated to take 1 hour to complete, including gathering, preparing, and submitting the completed application form to the USPTO. Time will vary depending upon the individual case. Any comments on the amount of time you require to complete this form and/ or suggestions for reducing this burden, should be sent to the Chief Information Officer, U.S. Patent and Trademark Office, U.S. Department of Commerce, P.O. Box 1450, Alexandria, VA 22313-1450. DO NOT SEND FEES OR COMPLETED FORMS TO THIS ADDRESS. **This form can only be used when in conjunction with EFS-Web. If this form is mailed to the USPTO, it may cause delays in reinstating the patent.**

Privacy Act Statement

The Privacy Act of 1974 (P.L. 93-579) requires that you be given certain information in connection with your submission of the attached form related to a patent application or patent. Accordingly, pursuant to the requirements of the Act, please be advised that: (1) the general authority for the collection of this information is 35 U.S.C. 2(b)(2); (2) furnishing of the information solicited is voluntary; and (3) the principal purpose for which the information is used by the U.S. Patent and Trademark Office is to process and/or examine your submission related to a patent application or patent. If you do not furnish the requested information, the U.S. Patent and Trademark Office may not be able to process and/or examine your submission, which may result in termination of proceedings or abandonment of the application or expiration of the patent.

The information provided by you in this form will be subject to the following routine uses:

1. The information on this form will be treated confidentially to the extent allowed under the Freedom of Information Act (5 U.S.C. 552) and the Privacy Act (5 U.S.C. 552a). Records from this system of records may be disclosed to the Department of Justice to determine whether the Freedom of Information Act requires disclosure of these records.

2. A record from this system of records may be disclosed, as a routine use, in the course of presenting evidence to a court, magistrate, or administrative tribunal, including disclosures to opposing counsel in the course of settlement negotiations.

3. A record in this system of records may be disclosed, as a routine use, to a Member of Congress submitting a request involving an individual, to whom the record pertains, when the individual has requested assistance from the Member with respect to the subject matter of the record.

4. A record in this system of records may be disclosed, as a routine use, to a contractor of the Agency having need for the information in order to perform a contract. Recipients of information shall be required to comply with the requirements of the Privacy Act of 1974, as amended, pursuant to 5 U.S.C. 552a(m).

5. A record related to an International Application filed under the Patent Cooperation Treaty in this system of records may be disclosed, as a routine use, to the International Bureau of the World Intellectual Property Organization, pursuant to the Patent Cooperation Treaty.

6. A record in this system of records may be disclosed, as a routine use, to another federal agency for purposes of National Security review (35 U.S.C. 181) and for review pursuant to the Atomic Energy Act (42 U.S.C. 218(c)).

7. A record from this system of records may be disclosed, as a routine use, to the Administrator, General Services, or his/her designee, during an inspection of records conducted by GSA as part of that agency's responsibility to recommend improvements in records management practices and programs, under authority of 44 U.S.C. 2904 and 2906. Such disclosure shall be made in accordance with the GSA regulations governing inspection of records for this purpose, and any other relevant (i.e., GSA or Commerce) directive. Such disclosure shall not be used to make determinations about individuals.

8. A record from this system of records may be disclosed, as a routine use, to the public after either publication of the application pursuant to 35 U.S.C. 122(b) or issuance of a patent pursuant to 35 U.S.C. 151. Further, a record may be disclosed, subject to the limitations of 37 CFR 1.14, as a routine use, to the public if the record was filed in an application which became abandoned or in which the proceedings were terminated and which application is referenced by either a published application, an application open to public inspections or an issued patent.

9. A record from this system of records may be disclosed, as a routine use, to a Federal, State, or local law enforcement agency, if the USPTO becomes aware of a violation or potential violation of law or regulation.

UNITED STATES PATENT AND TRADEMARK OFFICE

Commissioner for Patents
United States Patent and Trademark Office
P.O. Box 1450
Alexandria, VA 22313-1450
www.uspto.gov

In re Patent No. 7019952
Issue Date: March 28,2006
Application No. 10368429
Filed: February 20,2003
Attorney Docket No. 40806-185795

:DECISION GRANTING PETITION
:UNDER 37 CFR 1.378(c)

This is a decision on the electronic petition, filed May 18,2010 ,under 37 CFR 1.378(c) to accept the unintentionally delayed payment of the 3.5 year maintenance fee for the above-identified patent.

The petition is **GRANTED**.

The maintenance fee is accepted, and the above-identified patent reinstated as of May 18,2010 . This decision also constitutes notice that the fee has been accepted. An electronic copy of the petition and this decision has been created as an entry in the Image File Wrapper. Nevertheless, petitioner should print and retain an independent copy.

Telephone inquiries related to this electronic decision should be directed to the Electronic Business Center at 1-866-217-9197.

UNITED STATES PATENT AND TRADEMARK OFFICE

COMMISSIONER FOR PATENTS
UNITED STATES PATENT AND TRADEMARK OFFICE
P.O. BOX 1450
ALEXANDRIA, VA 22313-1450
www.uspto.gov

DICKSTEIN SHAPIRO MORIN & OSHINSKY LLP
2101 L STREET NW
WASHINGTON DC 20037-1526

COPY MAILED

FEB 03 2004

OFFICE OF PETITIONS

Applicant: Huang et al.
Appl. No.: 10/368,464
Filing Date: February 20, 2003
Title: REFERENCE VOLTAGE STABILIZATION IN CMOS SENSORS
Attorney Docket No.: M4065.0750/P750-A
Pub. No.: US 2003/0128147 A1
Pub. Date: July 10, 2003

This is in response to the request for correction of patent application publication under 37 CFR 1.221(b), which was filed on August 18, 2003.

The request is DISMISSED.

The instant request is that the application be republished deleting the patent assignment documents, which are not part of the application and are included as pages 3-7 of the published application.

37 CFR 1.221(b) is applicable "only when the Office makes a material mistake which is apparent from Office records." A material mistake must affect the public's ability to appreciate the technical disclosure of the patent application publication, to determine the scope of the patent application publication, or to determine the scope of the provisional rights that an applicant may seek to enforce upon issuance of a patent.[1] The instant request does not identify a material mistake in the publication made by the Office:

The inclusion of the assignment documents in the patent application publication is an Office mistake, but it is not a material error, as the information is extra information and does not affect ones understanding of the technical disclosure of the patent application publication. The error is clearly understandable from reading the specification and claims, as words are not read in a vacuum. The mistake does not affect the public's ability to appreciate the technical disclosure of the patent application publication, or determine the scope of the patent application publication or determine the scope of the provisional rights that an applicant may seek to enforce upon issuance of a patent.

The applicant is advised that a "request for republication of an application previously published" may be filed under 37 CFR 1.221(a). Such a request for republication "must include a copy of the application in compliance with the Office's electronic filing system requirements and be accompanied by the publication fee set forth in § 1.18(d) and the processing fee set forth in § 1.17(i)." If the request for republication does not comply with the electronic filing system

[1] Changes to Implement Eighteen-Month Publication of Patent Applications, 65 FR 57023, 57038 (Sept. 20, 2000), 1239 Off. Gaz. Pat. Office Notices 63, 75 (Oct. 10, 2000) (final rule).

requirements, the republication will not take place and the publication fee set forth in § 1.18(d) will be refunded. The processing fee will be retained.

Any request for republication under 37 CFR 1.221(b), should be submitted via the EFS system and questions or request for reconsideration of this decision, should be addressed as follows:

By mail to: Mail Stop PGPUB
Commissioner for Patents
P.O. Box 1450
Alexandria, VA 22313-1450

By facsimile: 703-305-8568

The application is being forwarded to Technology Center 2819 to await further examination in due course.

Inquiries relating to this matter may be directed to Mark Polutta at (703) 308-8122 (voice) or (703) 746-3465 (facsimile).

Mark O. Polutta
Office of Patent Legal Administration
Office of the Deputy Commissioner
for Patent Examination Policy

UNITED STATES PATENT AND TRADEMARK OFFICE

Commissioner for Patents
United States Patent and Trademark Office
P.O. Box 1450
Alexandria, VA 22313-1450
www.uspto.gov

BURNS, DOANE, SWECKER & MATHIS
P.O. BOX 1404
ALEXANDRIA VA 22313-1404

COPY MAILED

AUG 1 6 2004

OFFICE OF PETITIONS

In re Application of :
Carl E. Ward et al :
Application No. 10/368,484 :
Filed: February 20, 2003 :
Attorney Docket No. 005950-800 :

ON PETITION

This is a decision on the petition, filed August 12, 2004, under 37 CFR 1.313(c)(2) to withdraw the above-identified application from issue after payment of the issue fee.

The petition is **GRANTED**.

The above-identified application is withdrawn from issue for consideration of a submission under 37 CFR 1.114 (request for continued examination). See 37 CFR 1.313(c)(2).

Petitioner is advised that the issue fee paid on February 12, 2004 in the above-identified application cannot be refunded. If, however, the above-identified application is again allowed, petitioner may request that it be applied towards the issue fee required by the new Notice of Allowance.[1]

Telephone inquiries should be directed to the undersigned at (703) 305-8859.

The examiner of Technology Center AU 1764 will consider the request for continued examination under 37 CFR 1.114.

Karen Creasy

Karen Creasy
Petitions Examiner
Office of Petitions
Office of the Deputy Commissioner
for Patent Examination Policy

---

[1] The request to apply the issue fee to the new Notice may be satisfied by completing and returning the new Issue Fee Transmittal Form PTOL-85(b), which includes the following language thereon: "Commissioner for Patents is requested to apply the Issue Fee and Publication Fee (if any) or re-apply any previously paid issue fee to the application identified above." Petitioner is advised that, whether a fee is indicated as being due or not, the Issue Fee Transmittal Form **must** be completed and timely submitted to avoid abandonment. Note the language in bold text on the first page of the Notice of Allowance and Fee(s) Due (PTOL-85).

SPE RESPONSE FOR CERTIFICATE OF CORRECTION

Paper No.: _____

DATE : 03-25-09

TO SPE OF : ART UNIT 2624

SUBJECT : Request for Certificate of Correction for Appl. No.: 10/368498 Patent No.: 7209598

Please respond to this request for a certificate of correction within 7 days.

FOR IFW FILES:

Please review the requested changes/corrections as shown in the **COCIN** document(s) in the IFW application image. No new matter should be introduced, nor should the scope or meaning of the claims be changed.

Please complete the response (see below) and forward the completed response to scanning using document code **COCX**.

FOR PAPER FILES:

Please review the requested changes/corrections as shown in the attached certificate of correction. Please complete this form (see below) and forward it with the file to:

Certificates of Correction Branch (CofC)
South Tower - 9A22
Palm Location 7580

Certificates of Correction Branch
703-308-9390 ext. 123

Thank You For Your Assistance

The request for issuing the above-identified correction(s) is hereby:
Note your decision on the appropriate box.

- ☒ **Approved** — **All** changes apply.
- ☐ **Approved in Part** — Specify below which changes **do not** apply.
- ☐ **Denied** — State the reasons for denial below.

Comments: APPROVED AS TO THE MATTERS which do NOT introduce new MATTER And do NOT Require examination.

SA
SPE

2624
Art Unit

PTO/SB/44 (09-07)
Approved for use through 08/31/2010. OMB 0651-0033
U.S. Patent and Trademark Office; U.S. DEPARTMENT OF COMMERCE
Under the Paperwork Reduction Act of 1995, no persons are required to respond to a collection of information unless it displays a valid OMB control number.
(Also Form PTO-1050)

UNITED STATES PATENT AND TRADEMARK OFFICE
CERTIFICATE OF CORRECTION

PATENT NO. : 7,209,598

APPLICATION NO.: 10/368,498

ISSUE DATE : 4/24/2007

INVENTOR(S) : TSENG WEN-CHAO

It is certified that an error appears or errors appear in the above-identified patent and that said Letters Patent is hereby corrected as shown below:

- Claim 9, fourth line should read "level value in response to the document being all-white."
- Claim 10, fourth line should read "level value in response to the document being all-black."
- Claim 13, third line should read "a difference of a minimum gray level value and a maximum."
- Claim 28, first line should read "The apparatus of claim 27 [[26]] further comprising:"
- Claim 29, first line should read "The apparatus of claim 27 [[26]] further comprising:"

MAILING ADDRESS OF SENDER (Please do not use customer number below):
Bryan D. Kirkpatrick of Stolowitz Ford Cowger LLP
621 S.W. Morrison Street, Suite 600
Portland, Oregon 97205

This collection of information is required by 37 CFR 1.322, 1.323, and 1.324. The information is required to obtain or retain a benefit by the public which is to file (and by the USPTO to process) an application. Confidentiality is governed by 35 U.S.C. 122 and 37 CFR 1.14. This collection is estimated to take 1.0 hour to complete, including gathering, preparing, and submitting the completed application form to the USPTO. Time will vary depending upon the individual case. Any comments on the amount of time you require to complete this form and/or suggestions for reducing this burden, should be sent to the Chief Information Officer, U.S. Patent and Trademark Office, U.S. Department of Commerce, P.O. Box 1450, Alexandria, VA 22313-1450. DO NOT SEND FEES OR COMPLETED FORMS TO THIS ADDRESS. **SEND TO: Attention Certificate of Corrections Branch, Commissioner for Patents, P.O. Box 1450, Alexandria, VA 22313-1450.**

If you need assistance in completing the form, call 1-800-PTO-9199 and select option 2.

UNITED STATES PATENT AND TRADEMARK OFFICE

1761

COMMISSIONER FOR PATENTS
UNITED STATES PATENT AND TRADEMARK OFFICE
P.O. BOX 1450
ALEXANDRIA, VA 22313-1450
www.uspto.gov

MICHAEL E. TAKEN
ANDRUS SCEALES STARKE & SAWALL LLP
100 EAST WISCONSIN AVENUE, SUITE 1100
MILWAUKEE, WI 53202

COPY MAILED

JAN 0 9 2004

OFFICE OF PETITIONS

In re Application of
Noel R. Johnson et al
Application No. 10/368,518
Filed: February 18, 2003
Attorney Docket No. 4767-00026

NOTICE

This is a notice regarding your request for acceptance of a fee deficiency submission under 37 CFR 1.28. On September 1, 1998, the Court of Appeals for the Federal Circuit held that 37 CFR 1.28(c) is the sole provision governing the time for correction of the erroneous payment of the issue fee as a small entity. **See DH Technology v. Synergystex International, Inc. 154 F.3d 1333, 47 USPQ2d 1865 (Fed. Cir. Sept. 1, 1998).**

The Office no longer investigates or rejects original or reissue applications under 37 CFR 1.56. **1098 Off. Gaz. Pat. Office 502 (January 3, 1989)**. Therefore, nothing in this Notice is intended to imply that an investigation was done.

Your fee deficiency submission under 37 CFR 1.28 is hereby **ACCEPTED**.

Inquiries related to this communication should be directed to the Office of Petitions Staff at (703) 305-9285.

Further correspondence with respect to this matter should be addressed as follows:

By mail: Mail Stop PETITION
Commissioner for Patents
Post Office Box 1450
Alexandria, VA 22313-1450

Effective December 1, 2003, the Office of Petitions can no longer receive hand-carried correspondence, or facsimile transmissions of correspondence. The centralized location for hand-carried correspondence is the Customer Window located at:

2011 South Clark Place
Crystal Plaza Two, Lobby
Arlington, VA 22202

The centralized facsimile number is **(703) 872-9306.**

This file is being forwarded to Technology Center AU 1761.

Irvin Dingle
Petitions Examiner
Office of Petitions
Office of the Deputy Commissioner
for Patent Examination Policy

Transaction List

Search by

Accounting Date: (MMDDYY) Operator ID:

Find...

Accounting Date Starts: Ends:

Name/Number: 10368518

Attrny Docket No:

Deposit Account No.:

Accounting Date	Operator ID	Seq. No.	Txn Src	Fee Code	St	Amount	Name/Number	Dep Acct
02/24/2003	FFANAEIA	71	SALE	2201	A	84.00	10368518	
02/24/2003	FFANAEIA	70	SALE	2001	A	375.00	10368518	

RECEIVED
DEC 22 2003
OFFICE OF PETITIONS

OK | Adjustment Detail | Authorization Detail | Print Screen

1.28C

Adjustment date: 12/22/2003 SLUANG1
02/24/2003 FFANAEIA 00000030 10368518
01 FC:2001 -375.00 OP
02 FC:2201 -84.00 OP

UNITED STATES PATENT AND TRADEMARK OFFICE

COMMISSIONER FOR PATENTS
UNITED STATES PATENT AND TRADEMARK OFFICE
P.O. BOX 1450
ALEXANDRIA, VA 22313-1450
www.uspto.gov

COPY MAILED

MAR 20 2006

OFFICE OF PETITIONS

VENABLE
P.O. Box 34385
Washington, DC 20043

In re Application of	:
Krohn	: DECISION ON APPLICATION
Application No. 10/368,524	: FOR PATENT TERM ADJUSTMENT
Filed: February 19, 2003	:
Atty. Dkt. No.: 29953-183222	:

This is a decision on the "Request for PTA Calculation Review" filed September 8, 2005. This matter is being properly treated under 37 CFR 1.705(b) as a timely filed application for patent term adjustment.

The application for patent term adjustment ("PTA") under 37 CFR 1.705(b) is hereby **GRANTED**.

Applicant requests that the Determination of Patent Term Adjustment be corrected from 105 days, as indicated on the Determination of Patent Term Adjustment mailed August 8, 2005, to an adjustment of 84 days.

The correct patent term adjustment (PTA) at the time of the allowance is 84 days. The Office will adjust the PAIR screen to reflect that the PTA determination at the time of mailing of the instant letter reflects an adjustment of 84 days. A copy of the updated PAIR screen showing the correct determination is enclosed.

A review of the application history reveals that as of the time of allowance, an adjustment of 115 days can be attributed to the Office in accordance with 37 CFR 1.702(a)(1) and 1.703(a)(1)

The adjustment is properly reduced 31 days, rather than 105 days as previously calculated, in accordance with 37 CFR 1.704(b), as argued by applicants.

In view thereof, at the time of allowance, the application is entitled to an adjustment of 84 days, as argued by applicant.

Receipt is hereby acknowledged of the required application fee of $200.00.

The application file is being forwarded to the Office of Patent Publication for issuance of a patent.

Telephone inquiries specific to this matter should be directed to Petitions Attorney Alesia M. Brown at (571) 272-3205.

Nancy Johnson
Senior Petitions Attorney
Office of Petitions

Enclosure: Copy of Adjustment PAIR Calculation

Day : Friday
Date: 3/17/2006

PALM INTRANET

Time: 15:31:12

PTA Calculations for Application: 10/368524			
Application Filing Date:	02/19/2003	PTO Delay (PTO):	115
Issue Date of Patent:		Three Years:	0
Pre-Issue Petitions:	0	Applicant Delay (APPL):	105
Post-Issue Petitions:	0	Total PTA (days):	84
PTO Delay Adjustment:	74		

File Contents History

Number	Date	Contents Description	PTO	APPL	START
47	03/17/2006	ADJUSTMENT OF PTA CALCULATION BY PTO		31	
46	03/17/2006	ADJUSTMENT OF PTA CALCULATION BY PTO	105		
37	08/08/2005	MAIL NOTICE OF ALLOWANCE			
36	08/05/2005	ISSUE REVISION COMPLETED			
35	08/05/2005	NOTICE OF ALLOWANCE DATA VERIFICATION COMPLETED			
34	08/05/2005	CASE DOCKETED TO EXAMINER IN GAU			
33	08/03/2005	NOTICE OF ALLOWABILITY			
32	08/01/2005	CASE DOCKETED TO EXAMINER IN GAU			
31	07/28/2005	DATE FORWARDED TO EXAMINER			
30	07/25/2005	AMENDMENT AFTER FINAL REJECTION		105	25
29	07/25/2005	REQUEST FOR EXTENSION OF TIME - GRANTED			
28	03/24/2005	MAIL NOTICE OF RESTARTED RESPONSE PERIOD			
27	03/21/2005	LETTER RESTARTING PERIOD FOR RESPONSE (I.E. LETTER RE: REFERENCES)			
26	03/01/2005	CORRESPONDENCE ADDRESS CHANGE			
25	01/11/2005	MAIL FINAL REJECTION (PTOL - 326)			
24	01/07/2005	FINAL REJECTION			
23	10/27/2004	DATE FORWARDED TO EXAMINER			
22	10/18/2004	RESPONSE AFTER NON-FINAL ACTION			
21	10/18/2004	WORKFLOW INCOMING AMENDMENT IFW			
20	08/24/2004	MAIL SUPPLEMENTAL NON-FINAL ACTION			
19	08/24/2004	MAIL EXAMINER INTERVIEW SUMMARY (PTOL - 413)			
18	08/19/2004	EXAMINER INTERVIEW SUMMARY RECORD (PTOL - 413)			

17	08/23/2004	SUPPLEMENTAL NON-FINAL ACTION			
16	08/12/2004	MAIL NON-FINAL REJECTION	115		-1
15	08/09/2004	NON-FINAL REJECTION			
14	07/21/2004	CASE DOCKETED TO EXAMINER IN GAU			
13	01/21/2004	IFW TSS PROCESSING BY TECH CENTER COMPLETE			
12	01/21/2004	REFERENCE CAPTURE ON IDS			
11	01/08/2004	INFORMATION DISCLOSURE STATEMENT (IDS) FILED			
10	12/16/2003	INFORMATION DISCLOSURE STATEMENT (IDS) FILED			
9	12/12/2003	CASE DOCKETED TO EXAMINER IN GAU			
8	05/17/2003	CASE DOCKETED TO EXAMINER IN GAU			
7	02/19/2003	INFORMATION DISCLOSURE STATEMENT (IDS) FILED			
6	02/19/2003	NEW OR ADDITIONAL DRAWING FILED			
5	04/03/2003	APPLICATION DISPATCHED FROM OIPE			
4	04/02/2003	APPLICATION IS NOW COMPLETE			
2	03/04/2003	IFW SCAN & PACR AUTO SECURITY REVIEW			
1	02/19/2003	INITIAL EXAM TEAM NN			

Search Another: Application# [ ] Search

EXPLANATION OF PTA CALCULATION

EXPLANATION OF PTE CALCULATION

To go back use Back button on your browser toolbar.

Back to PALM | ASSIGNMENT | OASIS | Home page

UNITED STATES PATENT AND TRADEMARK OFFICE

COMMISSIONER FOR PATENTS
UNITED STATES PATENT AND TRADEMARK OFFICE
P.O. BOX 1450
ALEXANDRIA, VA 22313-1450
www.uspto.gov

COPY MAILED
JUN 21 2006
OFFICE OF PETITIONS

VENABLE
P.O. Box 34385
Washington, DC 20043

In re Patent No. 7,036,692 :
Issued: May 2, 2006 : DECISION REGARDING PTA and
Application No. 10/368,524 : NOTICE OF INTENT TO ISSUE
Filed: February 19, 2003 : CERTIFICATE OF CORRECTION
Atty. Dkt. No.: 29953-183222 :

This decision is in response to the "Request for PTA Calculation Review under 35 USC § 1.705(d)," filed May 5, 2006.

The request for reconsideration of patent term adjustment under 36 CFR 1.705(d) is **GRANTED**.

The above-identified application matured into U.S. Patent No. 7,036,692 on May 2, 2006. The instant request for reconsideration was timely filed May 5, 2006 in accordance with 37 C.F.R. § 1.705(d). The patent issued with a PTA of 43 days. Patentee argues that the adjustment of 194 days was improperly reduced 120 days in response to the submission of an application for patent term adjustment (PTA) filed September 8, 2005.

A review of the application history reveals that at the time of issuance, the application was entitled to an adjustment of 163 days, as argued by patentee.

An adjustment of 115 days can be attributed to the Office in accordance with 37 CFR 1.702(a)(1) and 1.703(a)(1). A further adjustment of 79 days can be attributed to the Office in accordance with 37 CFR 1.702(a)(4) and 1.703(a)(6).

The adjustment of 163 days is properly reduced 31 days in accordance with 37 CFR 1.704(b).

The adjustment was improperly reduced 120 days connection with the submission of an application for patent term adjustment on March 17, 2006. As submission of an application for patent term adjustment is not deemed a failure to engage in reasonable efforts to conclude prosecution (processing or examination), the 120 day reduction is to be corrected by issuance of a Certificate of Correction.

In view thereof, at the time of issuance, the patent was entitled to an adjustment of 163 days, as argued by patentee.

This application file will be forwarded to the Certificate of Corrections branch for issuance of a certificate of correction to indicate that the term of this patent is extended or adjusted under 35 U.S.C. 154(b) by 163 days.

No fee is due in connection with this matter.

Telephone inquiries specific to this matter should be directed to Petitions Attorney Alesia M. Brown at (571) 272-3205.

Kery A Fries

Kery Fries
Senior Legal Advisor
Office of Patent Legal Administration
Office of Deputy Commissioner
for Patent Examination Policy

CC: Draft Certificate of Correction

UNITED STATES PATENT AND TRADEMARK OFFICE

Commissioner for Patents
United States Patent and Trademark Office
P.O. Box 1450
Alexandria, VA 22313-1450
www.uspto.gov

TROP PRUNER & HU, PC
1616 S. VOSS ROAD, SUITE 750
HOUSTON TX 77057-2631

COPY MAILED
DEC 0 6 2006
OFFICE OF PETITIONS

In re Application of :
Anderson et al. :
Application No. 10/368,539 : DECISION ON PETITION
Filed: February 18, 2003 :
Attorney Docket No. ITL.0899US (P15202) :

This is a decision on the petition filed September 27, 2005, and supplemented on October 19, 2006, to withdraw the holding of abandonment for the above-identified application.

On January 25, 2005, the Office mailed a nonfinal Office Action, which set a three-month shortened statutory period for reply. In the absence of a timely filed response, the application was held abandoned on April 26, 2005.

In the present petition, the practitioner requested that the Office withdraw the holding of abandonment due to non-receipt of the nonfinal Office Action, re-mail the Office action, and restart the period for reply.

PETITION TO WITHDRAW THE HOLDING OF ABANDONMENT

A review of the record indicates no irregularity in the mailing of the nonfinal Office Action, and in the absence of any irregularity in the mailing, there is a strong presumption that the nonfinal Office Action was properly mailed to the address of record. This presumption may be overcome by a showing that the nonfinal Office action was not in fact received. The showing required to establish non-receipt of an Office communication must include a statement from the practitioner, stating that the practitioner did not receive the Office communication and attesting to the fact that a search of the file jacket and docket records indicates that the Office communication was not received. A copy of the docket record where the non-received Office communication would have been entered had it been received and docketed must be attached to and referenced in practitioner's statement. See MPEP 711.03(c)(I)(A). For example, if a three-month period for reply was set in the non-received Office communication, a copy of the docket report showing all replies docketed for a date three months from the mail date of the

non-received Office communication must be submitted as documentary proof of non-receipt of the Office communication. The showing outlined above may not be sufficient if there are circumstances that point to a conclusion that the Office communication may have been lost after receipt rather than a conclusion that the Office communication was lost in the mail (*e.g.* if the practitioner has a history of not receiving Office communications).

After reviewing the documents submitted on petition, the Office concludes that the showing of record is sufficient to warrant withdrawal of the holding of abandonment. The practitioner for applicants submitted copies of docket records where the nonfinal Office Action would have been entered had it been received and docketed. The practitioner attested to the fact that a search of the file jacket and docket records indicated that the nonfinal Office Action was not received. Accordingly, applicants presented the required showing under 37 CFR 1.181.

The petition under 37 CFR 1.181 is **GRANTED**. As no petition fee is required, the Office will refund the $130.00 petition fee to the Deposit Account.

Technology Center Art Unit 2189 has been advised of this decision. The matter is being referred to the Technology Center's technical support staff for mailing of a new nonfinal Office Action. The three (3) month shortened statutory time period for responding to the nonfinal Office Action will be set to run from the mailing date of the new nonfinal Office Action.

Telephone inquiries related to this decision may be directed to the undersigned at (571) 272-3211.

Christina Tartera Donnell

Christina Tartera Donnell
Senior Petitions Attorney
Office of Petitions

UNITED STATES PATENT AND TRADEMARK OFFICE

COMMISSIONER FOR PATENTS
UNITED STATES PATENT AND TRADEMARK OFFICE
P.O. BOX 1450
ALEXANDRIA, VA 22313-1450
WWW.USPTO.GOV

Paper No. None

ARMSTRONG, KRATZ, QUINTOS, HANSON & BROOKS, LLP
1725 K STREET, NW
SUITE 1000
WASHINGTON DC 20006

COPY MAILED

OCT 07 2005

OFFICE OF PETITIONS

In re Application of :
Masateru Chikazawa et al. :
Application No. 10/368,562 :
Filed: February 20, 2003 :
Patent No. 6,866,708 :
Issue Date: March 15, 2005 :
Attorney Docket Number: 030173 :
Title: AQUEOUS RELEASE AGENT :
COMPOSITION FOR MOLDING :
POLYURETHANE FOAM :

DECISION ON PETITION UNDER
37 C.F.R. §3.81(B)

This is a decision on the petition under 37 C.F.R. §1.183, filed August 5, 2005, which is properly treated as a petition pursuant to 37 C.F.R. §3.81(b)[1], to correct the Assignee's information on the Issue Fee Transmittal Form PTOL-85(b).

Petitioner states that a typographical error appears on form PTOL-85(b), and that an assignee's name was not listed properly.

37 CFR 3.81(b), effective June 25, 2004, reads:

(b) After payment of the issue fee: Any request for issuance of an application in the name of the assignee submitted after the date of payment of the issue fee, and any request for a patent to be corrected to state the name of the assignee, must state that the assignment was submitted for recordation as set forth in 3.11 before issuance of the patent, and must include a request for a certificate of correction under 1.323 of this chapter (accompanied by the fee set forth in 1.20(a)) and the processing fee set forth in 1.17(i) of this chapter.

1 See Official Gazette, June 22, 2004.

The present request under 37 CFR 3.81(b) was accompanied by a request for a certificate of correction (and fee) as required by 3.81(b), as well as the processing fee, but Petitioner has not stated that the assignment was submitted for recordation prior to the issuance of this patent, nor has Petitioner provided a copy of the notice of recordation of the assignment document. As petitioner has failed to fully comply with the provisions of this title, the request cannot be granted.

Hence, the petition is **DISMISSED.**

It is not clear if the assignment was submitted for recordation as set forth in 37 C.F.R. §3.11 before the issuance of this patent. Therefore, on renewed petition, Petitioner should submit the reel and frame number for this recordation.

Any reply must be submitted within **TWO (2) MONTHS** from the mail date of this decision. Extensions of time under 37 C.F.R. §1.136(a) are permitted. The reply should include a cover letter entitled "Renewed Petition Under 37 C.F.R. 3.81(b)". This is not a final agency action within the meaning of 5 U.S.C 704.

The renewed petition should indicate in a prominent manner that the attorney handling this matter is Paul Shanoski, and may be submitted by mail[2], hand-delivery[3], or facsimile[4].

Telephone inquiries regarding *this decision* should be directed to the undersigned at (571) 272-3225. Any questions concerning the issuance of a certificate of correction should be directed to the Certificates of Correction Branch at (703) 305-8309.

Paul Shanoski
Senior Attorney
Office of Petitions
United States Patent and Trademark Office

2 Mail Stop Petition, Commissioner for Patents, United States Patent and Trademark Office, P.O. Box 1450, Alexandria, VA, 22313-1450.
3 Customer Window, Randolph Building, 401 Dulaney Street, Alexandria, VA, 22314.
4 (571) 273-8300 - please note this is a central facsimile number.

UNITED STATES PATENT AND TRADEMARK OFFICE

COMMISSIONER FOR PATENTS
UNITED STATES PATENT AND TRADEMARK OFFICE
P.O. BOX 1450
ALEXANDRIA, VA 22313-1450
WWW.USPTO.GOV

Paper No. None

ARMSTRONG, KRATZ, QUINTOS, HANSON & BROOKS, LLP
1725 K STREET, NW
SUITE 1000
WASHINGTON DC 20006

COPY MAILED

FEB 16 2007

OFFICE OF PETITIONS

In re Application of	:	
Masateru Chikazawa et al.	:	
Application No. 10/368,562	:	DECISION ON RENEWED PETITION
Filed: February 20, 2003	:	UNDER 37 C.F.R. §3.81(B)
Patent No. 6,866,708	:	
Issue Date: March 15, 2005	:	
Attorney Docket Number: 030173	:	
Title: AQUEOUS RELEASE AGENT	:	
COMPOSITION FOR MOLDING	:	
POLYURETHANE FOAM	:	

This is a decision on the renewed petition pursuant to 37 C.F.R. §3.81(b)[1], filed October 26, 2005, to correct the Assignee's information on the Issue Fee Transmittal Form PTOL-85(b).

The original petition was filed on August 5, 2005, and was dismissed via the mailing of a decision on October 7, 2005.

The Office regrets the period of delay in issuing this decision.

Petitioner states that a typographical error appears on form PTOL-85(b), and that an assignee's name was not listed properly.

37 CFR §3.81(b), effective June 25, 2004, reads:

(b) After payment of the issue fee: Any request for issuance of an application in the name of the assignee submitted after the date of payment of the issue fee, and any request for a patent to be corrected to state the name of the assignee, must state that the assignment was submitted for recordation as set

1 See Official Gazette, June 22, 2004.

forth in 3.11 before issuance of the patent, and must include a request for a certificate of correction under 1.323 of this chapter (accompanied by the fee set forth in 1.20(a)) and the processing fee set forth in 1.17(i) of this chapter.

Both the evidence of Petitioner's representative and Office records show that the assignment of the above-identified application to this assignee was submitted for recording in the Office on February 8, 2005 (Reel/Frame 015685/0566). This was prior to the issuance of the present patent on March 15, 2005.

The request was accompanied by a certificate of correction (and fee) as required by Rule §3.81(b). Further, Office assignment records reflect that Chukyo Yushi Co., LTD. is the assignee of record. Accordingly, as the request complies with the provisions of Rule §3.81(b), it would be appropriate for a certificate of correction to be processed after issuance of this application into a patent.

Petitioner's representative has submitted duplicate payments of the required $130 processing fee and the required $100 certificate of correction fee. The duplicate payments will be refunded to his Deposit Account, as authorized in the petition.

The renewed petition is GRANTED.

The Certificates of Correction Branch will be notified of this decision so that the requested Certificate of Correction can be issued.

Telephone inquiries regarding this decision should be directed to the undersigned at (571) 272-3225. Any questions concerning the issuance of a certificate of correction should be directed to the Certificates of Correction Branch at (703) 305-8309.

Paul Shanoski

Paul Shanoski
Senior Attorney
Office of Petitions
United States Patent and Trademark Office

UNITED STATES PATENT AND TRADEMARK OFFICE

Commissioner for Patents
United States Patent and Trademark Office
P.O. Box 1450
Alexandria, VA 22313-1450
www.uspto.gov

FITZPATRICK CELLA HARPER & SCINTO
30 ROCKEFELLER PLAZA
NEW YORK NY 10112

COPY MAILED
MAY 19 2006
OFFICE OF PETITIONS

In re Patent No. 6,986,282	:	
Norio Okhuma et al.	:	
Issue Date: January 17, 2006	:	LETTER REGARDING
Application No. 10/368,580	:	PATENT TERM ADJUSTMENT
Filed: February 20, 2003	:	
Atty Docket No. 03500.017027	:	

This is in response to the "Comments on Determination of Patent Term Adjustment" filed March 13,2006, pursuant to patentees' duty of candor and good faith to the Office. Patentee states that the data presently available from the PAIR system indicates an incorrect number of days determined for USPTO delay and/or the Applicant's delay.

The request for reconsideration of the patent term adjustment indicated on the patent is **DISMISSED**.

On January 17, 2006, the application matured into U.S. Patent No. 6,986,282, with a revised patent term adjustment of 153 days.

On March 13, 2006, patentee submitted this letter, advising the Office of his belief that the PTA days accorded were incorrect.

A review of the application history reveals that the patent term adjustment of 188 days indicated on the Issue Notification is correct. However, after the mailing of the notice of allowance, the initial determination of PTA of 188 days was reduced by 80 days for then applicant's filing of a 312 amendment after the mailing of the notice of allowance.

The application was also accorded additional PTA for Office delay in issuance of the Patent four months and 45 days after the payment of the issue fee.

The application history reveals no further bases for adjustment or reduction of the term of the patent issuing from the above-identified application.

In view thereof, it is concluded that the patent correctly issued with a revised patent term adjustment of 153 days.

As this letter was submitted as an advisement to the Office of an error in the Patent Term Adjustment in Patentee's favor, the Office will not assess the $200.00 application fee under 37 CFR 1.705(b). The Office thanks patentee for their good faith and candor in bringing this to the attention of the Office.

Further correspondence with respect to this matter should be addressed as follows:

By mail: Mail Stop Petitions
Commissioner for Patents
P.O. Box 1450
Alexandria VA 22313-1450

By FAX: (571) 273-8300
Attn: Office of Petitions

Telephone inquiries specific to this matter should be directed to Patricia Faison-Ball, Senior Petitions Attorney, at (571) 272-3212.

Nancy Johnson
Senior Petitions Attorney
Office of Petitions

UNITED STATES PATENT AND TRADEMARK OFFICE

COMMISSIONER FOR PATENTS
UNITED STATES PATENT AND TRADEMARK OFFICE
P.O. BOX 1450
ALEXANDRIA, VA 22313-1450
www.uspto.gov

MICHAEL J. DULANEY
510 EAST MAIN STREET
NANTICOKE, PA 18634

COPY MAILED

JUN 27 2005

OFFICE OF PETITIONS

In re Application of :
Bolan et al. :
Application No. 10/368,585 : ON PETITION
Filed: February 20, 2003 :
Title of Invention: :
SHIRT SLEEVE PRESSING MACHINE :
WITH PLEAT PRESSING HEADS :

This is in response to the petition filed to revive the application under 37 CFR 1.137(a), filed May 18, 2005.

The petition is dismissed.

Any further petition to revive the above-identified application (under 37 CFR 1.137(a)), must be submitted within TWO (2) MONTHS from the mail date of this decision. Extensions of time under 37 CFR 1.136(a) are permitted. The reconsideration request should include a cover letter entitled "Request for Reconsideration of Petition under 37 CFR 1.137. This is **not** final agency action within the meaning of 5 U.S.C. § 704.

The above-identified application became abandoned for failure to timely and properly reply to the Notice of Allowance and Issue Fee Due ("Notice"), mailed August 16, 2004. The Notice set a non-extendable three (3) month period for reply. No reply having been received, the application became abandoned November 17, 2004. The mailing of this decision precedes the mailing of a Notice of Abandonment.

Applicant files the instant petition and asserts that the delay was unavoidable due to the unexpected death of Applicant's attorney. The petition is accompanied by the petition fee and $1400.00 for the issue fee.

A grantable petition to revive an abandoned application under 37 CFR 1.137(a) must be accompanied by: (**1**) the required reply (unless previously filed), which may met by the filing of a notice of appeal and the requisite fee; a Request for Continued

Examination; an amendment or request for reconsideration which *prima facie* places the application in condition for allowance, or a first or second submission under 37 CFR 1.129(a) if the application has been pending for at least two years as of June 8, 1995, taking into account any reference made in such application to any earlier filed application under 35 USC 120, 121 and 365(c); (**2**) the petition fee as set forth in 37 CFR 1.17(l); (**3**) a showing to the satisfaction of the Commissioner that the entire delay in filing the required reply from the due date for the reply until the filing of a grantable petition pursuant to 37 CFR 1.137(a) was unavoidable; and (**4**) any terminal disclaimer (and fee as set forth in 37 CFR 1.20(d)) required pursuant to 37 CFR 1.137(c).

Applicant lacks item (**1**) as set forth above.

As to item (**1**), Applicant is advised that the issue fee has increased effective December 8, 2004, to $1500.00. Applicant has failed to file the appropriate issue fee. An additional $100.00 is required.

Further correspondence with respect to this matter should be addressed as follows:

By mail: Commissioner for Patents
PO Box 1450
Alexandria, VA 22313-1450

By FAX: (703) 872-9306
Attn: Office of Petitions

By hand: Customer Service Window
Randolph Building
401 Dulany Street
Alexandria, VA 22314

Telephone inquiries concerning this matter should be directed to the undersigned at (571) 272-3232.

Derek L. Woods
Petitions Attorney
Office of Petitions

UNITED STATES PATENT AND TRADEMARK OFFICE

COMMISSIONER FOR PATENTS
UNITED STATES PATENT AND TRADEMARK OFFICE
P.O. BOX 1450
ALEXANDRIA, VA 22313-1450
www.uspto.gov

MICHAEL J. DULANEY
510 EAST MAIN STREET
NANTICOKE, PA 18634

COPY MAILED
AUG 0 8 2005
OFFICE OF PETITIONS

In re Application of	:
Bolan et al.	:
Application No. 10/368,585	: ON PETITION
Filed: February 20, 2003	:
Title of Invention:	:
SHIRT SLEEVE PRESSING MACHINE	:
WITH PLEAT PRESSING HEADS	:

This is in response to the Request for Reconsideration of Petition filed to revive the application under 37 CFR 1.137(a), filed July 5, 2005.

The petition is granted.

The above-identified application became abandoned for failure to timely and properly reply to the Notice of Allowance and Issue Fee Due ("Notice"), mailed August 16, 2004. The Notice set a non-extendable three (3) month period for reply. No reply having been received, the application became abandoned November 17, 2004. The mailing of this decision precedes the mailing of a Notice of Abandonment.

A petition to revive the application under 37 CFR 1.137(a) was dismissed in a Decision mailed June 27, 2005, for failing to meet the requirements of a grantable petition under 37 CFR 1.137(a)[1].

With the instant petition, Applicant has satisfied the requirements of a grantable petition under 37 CFR 1.137(a). The issue fee is filed with the instant petition. Accordingly, the petition is granted.

This application is being referred to Publishing Division for processing into a patent.

Telephone inquiries concerning this decision should be directed to the undersigned at (571) 272-3232.

Derek L. Woods
Attorney
Office of Petitions

[1] The Decision dismissing the petition incorrectly noted that the issue fee had increased to $1500.00. The Office regrets the error. A refund of $100.00 via treasury check has been scheduled.

SPE RESPONSE FOR CERTIFICATE OF CORRECTION

Paper No.: _____

DATE : April 14, 2008

TO SPE OF : ART UNIT 2618

SUBJECT : Request for Certificate of Correction for Appl. No 10/368592patent no7274491

Please respond to this request for a certificate of correction within 7 days.

Please review the requested changes/corrections as shown in the **COCIN** document(s) in the IFW application image. No new matter should be introduced, nor should the scope or meaning of the claims be changed.

Please complete the response (see below) and forward the completed response to scanning using document code **COCX**.

Magdalene Talley

Certificates of Correction Branch

703-308-9390 ext. 116

Thank You For Your Assistance

The request for issuing the above-identified correction(s) is hereby:

Note your decision on the appropriate box.

- ☐ **Approved** — **All** changes apply.
- ☐ **Approved in Part** — Specify below which changes **do not** apply.
- ☒ **Denied** — State the reasons for denial below.

Comments: Changes to claims possibly affecting scope/meaning

/Edward L.Coles/

SPE

2625

Art Unit

UNITED STATES PATENT AND TRADEMARK OFFICE

Commissioner for Patents
United States Patent and Trademark Office
P.O. Box 1450
Alexandria, VA 22313-1450

Date Mailed : January 21, 2010
Serial No. :10/368592
Patent No. :7,274,491 B2
Patent Issued :January 21, 2009
Title :IMAGE PROCESSING METHOD AND APPARATUS

Re: Request for Certificate of Correction

Consideration has been given your request for the issuance of a certificate of correction for the above-identified patent.

Respecting the alleged error noted in your request changes to claims possibly affecting scope/meaning.

In view of the foregoing your request is hereby denied.

Magdalene Talley
For Mary F. Diggs, Supervisor
Decisions and Certificate
Of Correction Branch
(571)272-0943
FAX 571-270-9942

Fitzpatrick, Cella, Harper & Scinto
30 Rockefeller Plaza
New York, NY 10112-3801

UNITED STATES PATENT AND TRADEMARK OFFICE

OFFICE

GOWLING LAFLEUR HENDERSON, LLP
SUITE 2600
160 ELGIN STREET
OTTAWA, K1P 1C3
CANADA

COPY MAILED

NOV 0 8 2005

Director's Office
Office of Patent Publication

In re Application of
LEE, MICHAEL C., et al. :
Application No. 10/368,596 : **DECISION ON PETITION**
Filed: February 20, 2003 :
Attorney Docket No. 08-896742US :

This is a decision on the Petition To Withdraw Holding Of Abandonment, received in the United States Patent and Trademark Office (USPTO) on October 21, 2005.

The petition is **GRANTED**.

The application was abandoned for failure to timely file a proper reply to the Office letter — Notice Of Drawing Inconsistency With Specifications (Notice) — mailed July 13, 2005.

In absence of any irregularity in the mailing of the Notice, there is a strong presumption that the Office action was properly mailed on July 13, 2005 to practitioner at the address of record. This presumption may be overcome by a showing that the Office action was not in fact received. The showing required to establish the failure to receive an Office action must include a statement from the practitioner stating that the practitioner did not receive the Office action, and attesting to the fact that a search of the file jacket and docket records indicates that the Office action was not received. A copy of the docket record must be attached to and referenced in practitioner's statement. MPEP 711.03(c)II

Petitioner has met the above-stated conditions. Accordingly, the holding of abandonment is hereby withdrawn.

The Notice is being re-mailed concurrently with this decision. The applicant has been given a one-month time period to correct the informalities.

Thomas E Hawkins

Thomas E. Hawkins
Paralegal Specialist
Office of the Director
Office of Patent Publication

UNITED STATES PATENT AND TRADEMARK OFFICE

Commissioner for Patents
United States Patent and Trademark Office
P.O. Box 1450
Alexandria, VA 22313-1450
www.uspto.gov

WK

Mailed: 1-18-06

In re application of	:	
Kazuaki Sakurada.	:	DECISION ON
Serial No. 10/368,607	:	PETITION
Filed: February 20, 2003	:	
For: System and Methods For Manufacturing A Liquid Crystal Device	:	

This is a response to the PETITION UNDER RULE 37 C.F.R. 1.181(a) TO WITHDRAW NOTICE OF ABANDONMENT, filed June 29, 2005. The petition requests that the abandonment, as set forth in the Notice of Abandonment mailed May 18, 2005, be withdrawn since the applicant did respond on September 3, 2004 to the Restriction Requirement.

DECISION

The instant request is accepted as a timely petition under 37 C.F.R. 1.181 (no fee). Applicant has submitted a copy of their response together with a PTO receipt-date stamped coversheet confirming receipt.

The Petition is **GRANTED**. The abandonment is withdrawn, applicant's response of September 3, 2004 will be entered into the file and the application will be forwarded to the examiner for consideration of applicant's response.

Jacqueline M. Stone

Jacqueline Stone, Director
Technology Center 1700
Chemical and Materials Engineering

Christopher Philip Wrist
Oliff & Berridge, PLC
P.O. Box 19928
Alexandria, Virginia 22320

UNITED STATES PATENT AND TRADEMARK OFFICE

Commissi ner for Patents
Unit d States Patent and Trademark Office
P.O. Box 1450
Alexandria, VA 22313-1450
www.uspto.gov

FITZPATRICK CELLA HARPER & SCINTO
30 ROCKEFELLER PLAZA
NEW YORK, NY 10112

COPY MAILED
JUN 2 9 2004
OFFICE OF PETITIONS

In re Application of	:
Masahiro Morisada	:
Application No. 10/368,621	: DECISION GRANTING PETITION
Filed: February 20, 2003	: UNDER 37 CFR 313(c)(2)
Attorney Docket No. 00862.022907	:

This is a decision on the petition, filed June 28, 2004, under 37 CFR 1.313(c)(2) to withdraw the above-identified application from issue after payment of the issue fee.

The petition is **GRANTED**.

The above-identified application is withdrawn from issue for consideration of a submission under 37 CFR 1.114 (request for continued examination). See 37 CFR 1.313(c)(2).

Petitioner is advised that the issue fee paid on March 3, 2004 in the above-identified application cannot be refunded. If, however, the above-identified application is again allowed, petitioner may request that it be applied towards the issue fee required by the new Notice of Allowance.[1]

Telephone inquiries should be directed to the undersigned at (703) 305-8680.

This matter is being referred to Technology Center AU 2851 for processing of the request for continued examination under 37 CFR 1.114 and for consideration of the concurrently filed Information Disclosure Statement.

Frances Hicks
Petitions Examiner
Office of Petitions
Office of the Deputy Commissioner
for Patent Examination Policy

---

[1] The request to apply the issue fee to the new Notice may be satisfied by completing and returning the new Issue Fee Transmittal Form PTOL-85(b), which includes the following language thereon: "Commissioner for Patents is requested to apply the Issue Fee and Publication Fee (if any) or re-apply any previously paid issue fee to the application identified above." Petitioner is advised that, whether a fee is indicated as being due or not, the Issue Fee Transmittal Form **must** be completed and timely submitted to avoid abandonment. Note the language in bold text on the first page of the Notice of Allowance and Fee(s) Due (PTOL-85).

UNITED STATES PATENT AND TRADEMARK OFFICE

COMMISSIONER FOR PATENTS
UNITED STATES PATENT AND TRADEMARK OFFICE
P.O. BOX 1450
ALEXANDRIA, VA 22313-1450
www.uspto.gov

YOUNG & THOMPSON
745 SOUTH 23RD STREET 2ND FLOOR
ARLINGTON VA 22202

COPY MAILED
MAR 0 5 2004
OFFICE OF PETITIONS

Applicant: Fabbroni
Appl. No.: 10/368,633
Filing Date: February 20, 2003
Title: PROCESS FOR MODELING CERAMIC TILES
Attorney Docket No.: 2541-1003
Pub. No.: US 2003/0183989 A1
Pub. Date: October 2, 2003

This is in response to the request for correction of patent application publication under 37 CFR 1.221(b), which was filed on November 19, 2003.

The request is DISMISSED.

The instant request is that the application be republished because the patent application publication contains an error in the title, wherein "Process For Modeling Ceramic Tiles"is misprinted as "Process For Medeling Ceramic Tiles".

37 CFR 1.221(b) is applicable "only when the Office makes a material mistake which is apparent from Office records." A material mistake must affect the public's ability to appreciate the technical disclosure of the patent application publication, to determine the scope of the patent application publication, or to determine the scope of the provisional rights that an applicant may seek to enforce upon issuance of a patent.[1] The instant request does not identify a material mistake in the publication made by the Office:

The instant request identifies a minor typographical error in the title of the invention, wherein "Modeling"is misprinted as "Medeling", which is not a material mistake because the technical disclosure and the claims are understandable, as the phrase is correctly spelled throughout the specification. The typographical error identified by applicant is an Office mistake, but it is not a material mistake as required by 37 CFR 1.221(b).

Requestor's argument that a person looking at the title of the invention would not recognize that the invention is directed to a method of modeling ceramic tiles is not persuasive. The misspelling is a minor typographical error, which is clearly understandable from reading the title and the specification in which the term is used, as words are not read in a vacuum. The error does not affect the public's ability to appreciate the technical disclosure of the patent application publication, or determine the scope of the patent application publication or determine the scope of the provisional rights that an applicant may seek to enforce upon issuance of a patent.

On May 5, 2003, a Filing Receipt (copy enclosed) was mailed listing the title of the invention as a "Process For Medeling Ceramic Tiles". To avoid this type of problem in the future, applicant's representative should make request a corrected filing receipt using the facsimile number (703-746-9195) on the Filing Receipt.

---

[1] Changes to Implement Eighteen-Month Publication of Patent Applications, 65 FR 57023, 57038 (Sept. 20, 2000), 1239 Off. Gaz. Pat. Office Notices 63, 75 (Oct. 10, 2000) (final rule).

Applicant's request for a corrected patent application publication on November 19, 2003, may constitute a "failure to engage in reasonable efforts to conclude processing or examination of the application." See 1.704(c). This determination will be made on or after a mailing of a Notice of Allowance.

The applicant is advised that a "request for republication of an application previously published" may be filed under 37 CFR 1.221(a). Such a request for republication "must include a copy of the application in compliance with the Office's electronic filing system requirements and be accompanied by the publication fee set forth in § 1.18(d) and the processing fee set forth in § 1.17(i)." If the request for republication does not comply with the electronic filing system requirements, the republication will not take place and the publication fee set forth in § 1.18(d) will be refunded. The processing fee will be retained.

Any request for republication under 37 CFR 1.221(b), should be submitted via the EFS system and questions or request for reconsideration of this decision, should be addressed as follows:

By mail to: Mail Stop PGPUB
Commissioner for Patents
P.O. Box 1450
Alexandria, VA 22313-1450

By facsimile: 703-305-8568

The application will be examined in due course.

Inquiries relating to this matter may be directed to Mark Polutta at (703) 308-8122 (voice) or (703) 746-3465 (facsimile).

Mark O. Polutta
Office of Patent Legal Administration
Office of the Deputy Commissioner
for Patent Examination Policy

Enclosure: Copy of previously mailed Filing Receipt
Corrected Filing Receipt

UNITED STATES PATENT AND TRADEMARK OFFICE

Commissioner for Patents
United States Patent and Trademark Office
P.O. Box 1450
Alexandria, VA 22313-1450
www.uspto.gov

MATTINGLY, STANGER,
MALUR & BRUNDIDGE, P.C.
1800 DIAGONAL ROAD
SUITE 370
ALEXANDRIA VA 22314

COPY MAILED
SEP 02 2008

In re Application of	:	
Uemura	:	
Application No. 10/368,644	:	DECISION
Filed: 20 February, 2003	:	
Attorney Docket No. 520.42513X00	:	

This is a decision on the petition filed on 7 May, 2008, considered as a petition under 37 C.F.R. §1.181 (no fee) requesting withdrawal of the holding of abandonment in the above-identified application

The petition under 37 C.F.R. §1.181 is **GRANTED**.

As to the Request to Withdraw
the Holding of Abandonment

A proper showing (for relief under 37 C.F.R. §1.181):

- (as to non-receipt) requires at the very minimum: a statement from practitioner stating that the Office action was not received by the practitioner; a statement from the practitioner attesting to the fact that a search of the file jacket and docket records for the application indicates that the Office action was not received with a copy of those docket records; and a brief statement of the calendaring process and a copy of the due-date (calendar) docket record(s) where the nonreceived Office action would have been scheduled for reply had it been received must be attached to and referenced in the practitioner's statement; alternatively,

- (for a showing of timely and proper reply) requires a statement from practitioner stating that the reply was timely submitted by the practitioner; and copies of all papers submitted as and/or in support of that reply, with/and a copy of the date-stamped receipt card, Office FAX receipt acknowledgement (not simply Petitioner's FAX transmittal), or EFS

receipt acknowledgment from the Office, along with practitioner's attestation as to the correctness/completeness of his/her records.

The showing(s) must include that of the person(s) with first-hand knowledge and an acknowledgment by the Petitioner that he/she has reviewed that information in compliance with his/her duty of candor to the Office.

BACKGROUND

The record reflects as follows:

Petitioner failed to reply to the Notice of Allowance/Allowability and Fees Due (copy enclosed) mailed on 27 December, 2007, with reply due under a non-extendable deadline on or before 27 March, 2008.

The application went abandoned by operation of law after midnight 27 March, 2008.

The Office mailed the Notice of Abandonment on 21 April, 2008.

On 7 May, 2008, Petitioner filed the instant petition averring, *inter alia*, non-receipt of the Notice in question and supporting that averment of the statement of search of files for and non-discovery of the Notice, and further supported by copies of the docket report for the instant application and for the due date of the reply and statement that there was no such reply due on that date. Petitioner further tendered the fees due with the instant petition.

Out of an abundance of caution, Petitioners always are reminded that the filing of a petition under 37 C.F.R. §1.181 does not toll any periods that may be running any action by the Office and a petition seeking relief under the regulation must be filed within two (2) months of the act complained of (*see*: 37 C.F.R. §1.181(f)), and that those registered to practice and all others who make representations before the Office are reminded to inquire into the underlying facts of representations made to the Office and support averments with the appropriate documentation–since all owe to the Office the continuing duty to disclose.[1]

The availability of applications and application papers online to applicants/practitioners who diligently associate their Customer Number with the respective application(s) now provides an applicant/practitioner on-demand information as to events/transactions in an application.

[1] See supplement of 17 June, 1999. The Patent and Trademark Office is relying on Petitioner's duty of candor and good faith and accepting a statement made by Petitioner. See Changes to Patent Practice and Procedure, 62 Fed. Reg. at 53160 and 53178, 1203 Off. Gaz. Pat. Office at 88 and 103 (responses to comments 64 and 109)(applicant obligated under 37 C.F.R. §10.18 to inquire into the underlying facts and circumstances when providing statements to the Patent and Trademark Office).

Allegations as to the Request to
Withdraw the Holding of Abandonment

The courts have determined the construct for properly supporting a petition seeking withdrawal of a holding of abandonment.[2] (*See*, also, the commentary at MPEP §711.03(c)(I)(A) and (B).) And the regulation requires that relief be sought within two (2) months of the act complained of.

Petitioner appears to have satisfied the showing required.

CONCLUSION

Accordingly, The petition under 37 C.F.R. §1.181 is **granted** and the 21 April, 2008, Notice of Abandonment is **vacated**.

The instant application is released to the Publications Branch to be processed into a patent in due course.

Petitioner may find it beneficial to view Private PAIR within a fortnight of the instant decision to ensure that the revival has been acknowledged by the Publications Branch in response to this decision—and it is noted that all inquiries with regard to that change in status should be directed to the Publications Branch where that change of status must be effected.

While telephone inquiries regarding this decision may be directed to the undersigned at (571) 272-3214, it is noted that all practice before the Office is in writing (see: 37 C.F.R. §1.2[3]) and the proper authority for action on any matter in this regard are the statutes (35 U.S.C.), regulations (37 C.F.R.) and the commentary on policy (MPEP). Therefore, no telephone discussion may be controlling or considered authority for Petitioner's action(s).

/John J. Gillon, Jr./
John J. Gillon, Jr.
Senior Attorney
Office of Petitions

---

[2] See: Delgar v. Schulyer, 172 USPQ 513 (D.D.C. 1971).

[3] The regulations at 37 C.F.R. §1.2 provide:

§1.2 Business to be transacted in writing.
All business with the Patent and Trademark Office should be transacted in writing. The personal attendance of applicants or their attorneys or agents at the Patent and Trademark Office is unnecessary. The action of the Patent and Trademark Office will be based exclusively on the written record in the Office. No attention will be paid to any alleged oral promise, stipulation, or understanding in relation to which there is disagreement or doubt.

UNITED STATES PATENT AND TRADEMARK OFFICE

COMMISSIONER FOR PATENTS
UNITED STATES PATENT AND TRADEMARK OFFICE
P.O. BOX 1450
ALEXANDRIA, VA 22313-1450
WWW.USPTO.GOV

Paper No. 4

MICHAEL J DEHAEMER JR
WINSTEAD SECHREST & MINICK
5400 RENAISSANCE TOWER
1201 ELM STREET
DALLAS TX 75270

COPY MAILED

AUG 2 7 2003

OFFICE OF PETITIONS

In re Application of Gubbi, et al. Application No. 10/368,652 Filed: February 18, 2003 Attorney Docket No. 2836-P249p2x1	: : : : :	DECISION ON PETITION

This is a decision on the petition under 37 CFR 1.182 filed June 10, 2003, requesting that Figures 5 and 6 of the drawings be considered as part of the disclosure of the originally filed application, or alternatively, that the figures be incorporated by reference.

The petition is **DISMISSED**.

The application was filed on February 18, 2003. However, on May 6, 2003, the Office mailed a "Notice to File Corrected Application Papers" stating that the application had been accorded a filing date of February 18, 2003, and advising applicants that the drawing of Figures 5 and 6 described in the specification appeared to have been omitted.

In response, the present petition was filed. Petitioners submit that Figures 5 and 6 were filed with the application on February 18, 2003, as evidenced by Box 4 of the transmittal letter, indicating the application was filed with 8 sheets of drawings. Alternatively, petitioners request that Figures 5 and 6 be incorporated into the application based upon the incorporation by reference statement contained in Box 18 of the transmittal letter.

The listing of papers on an application transmittal is not sufficient evidence that a paper so listed was actually filed in the Patent and Trademark Office. The Office has a well established and well publicized practice of providing a receipt for papers filed in the Office to any applicant desiring a

for papers filed in the Office to any applicant desiring a receipt. The practice requires that any paper for which a receipt is desired be filed in the Office with a self-addressed postcard identifying the paper. A postcard receipt which itemizes and properly identifies the papers which are being filed serves as *prima facie* evidence of receipt in the Office of all the items listed thereon on the date stamped thereon by the Office. See MPEP 503. Petitioners have not submitted a return postcard.

Alternatively, petitioners seek to incorporate Figures 5 and 6 into the application. MPEP 201.06(c) states that:

> . . . an applicant may incorporate by reference the prior application by including, in the application-as-filed, a statement that such specifically enumerated prior application or applications are "hereby incorporated herein by reference." The statement may appear in the specification or in the application transmittal letter. The inclusion of this incorporation by reference of the prior application(s) will permit an applicant to amend the continuing application to include any subject matter in such prior application(s), **without the need for a petition** (emphasis added).

Obviously, in view of the incorporation by reference of the prior application, the drawings of Figures 5 and 6 are not new matter if they were a part of the disclosure of the prior application.

The application is being returned to the Office of Initial Patent Examination for further processing with a filing date of February 18, 2003, including an indication in Office records that 6 sheets of drawings were present on filing.

Thereafter, the application will be forwarded to Group Art Unit 2154 for consideration by the examiner of the instant petition as an amendment requesting the entry of Figures 5 and 6.

Telephone inquiries specific to this matter should be directed to Petitions Attorney Cliff Congo at 703-305-0272.

Beverly Flanagan
Supervisory Petitions Examiner
Office of Petitions

UNITED STATES PATENT AND TRADEMARK OFFICE

COMMISSIONER FOR PATENTS
UNITED STATES PATENT AND TRADEMARK OFFICE
P.O. BOX 1450
ALEXANDRIA, VA 22313-1450
www.uspto.gov

David B. Cochran, Esq.
JONES DAY
North Point
901 Lakeside Avenue
Cleveland, OH 44114

COPY MAILED

JUL 0 8 2005

OFFICE OF PETITIONS

In re Application of	:
Watson, et al.	: DECISION GRANTING STATUS
Application No. 10/368,667	: UNDER 37 CFR 1.47(a)
Filed: February 19, 2003	:
Atty. Dkt. No.: 481340010053	:
For: REMOTE PROGRAMMING OF	:
SERIALIZED SEMICONDUCTOR	:
DEVICES USING WEB OR INTERNET	:
PROTOCOLS	:

This decision is in response to the petition under 37 CFR 1.47(a), resubmitted May 14, 2005.

The petition is **GRANTED**.

Petitioner has shown that inventor Francis Zhu cannot be reached or located for presentation of the application papers.

Thus, the above-identified application and papers have been reviewed and found in compliance with 37 CFR 1.47(a). This application is hereby accorded Rule 1.47(a) status.

As provided in Rule 1.47(c), this Office will forward notice of this application's filing to the non-signing inventor at the address given in the petition. Notice of the filing of this application will also be published in the Official Gazette.

After this decision is mailed, the above-identified application will be returned to the Office of Initial Patent Examination for further processing.

Telephone inquiries regarding this decision should be directed to the undersigned at (571) 272-3205.

Alesia M. Brown
Petitions Attorney
Office of Petitions

UNITED STATES PATENT AND TRADEMARK OFFICE

COMMISSIONER FOR PATENTS
UNITED STATES PATENT AND TRADEMARK OFFICE
P.O. BOX 1450
ALEXANDRIA, VA 22313-1450
www.uspto.gov

Francis (Hong Fang) Zhu
1541 Riverside Drive, Apt. 1211
Ottawa, Ontaria
CANADA

COPY MAILED
JUL 0 8 2005
OFFICE OF PETITIONS

In re Application of :
Watson, et al. :
Application No. 10/368,667 : LETTER
Filed: February 19, 2003 :
Atty. Dkt. No.: 481340010053 :
For: REMOTE PROGRAMMING OF :
SERIALIZED SEMICONDUCTOR :
DEVICES USING WEB OR INTERNET :
PROTOCOLS :

Dear Sir:

You are named as an inventor in the above-identified United States patent application filed under the provisions of 35 U.S.C. 116 (United States Code) and 37 C.F.R. § 1.47(a), Rules of Practice in Patent Cases. Should a patent be granted on the application you will be designated therein as a joint inventor.

As a named inventor you are entitled to inspect any paper in the file wrapper of the application, order copies of all or any part thereof (at a prepaid cost as per 37 C.F.R. § 1.19) or make your position of record in the application. Alternatively, you may arrange to do any of the preceding through a registered patent attorney or agent presenting written authorization from you. If you care to join the application, counsel of record (see below) would presumably assist you. Joining in the application would entail the filing of an appropriate oath or declaration by you pursuant to 37 C.F.R. § 1.63.

Telephone inquiries regarding this communication should be directed to the undersigned at (571) 272-3205. Requests for information regarding your application should be directed to the File Information Unit at (703) 308-2733. Information regarding how to pay for and order a copy of the application, or a specific paper in the application, should be directed to Certification Division at (703) 308-9726 or 1-800-972-6382 (outside the Washington D.C. area).

Telephone inquiries regarding this matter should be directed to the undersigned at (571) 272-3205.

Alesia M. Brown
Petitions Attorney
Office of Petitions

SPE RESPONSE FOR CERTIFICATE OF CORRECTION

Paper No.: _____

DATE : February 5, 2008

TO SPE OF : ART UNIT 2800 (2116)

SUBJECT : Request for Certificate of Correction for Appl. No. 10/368669 patent no. 7076673

Please respond to this request for a certificate of correction within 7 days.

Please review the requested changes/corrections as shown in the **COCIN** document(s) in the IFW application image. No new matter should be introduced, nor should the scope or meaning of the claims be changed.

Please complete the response (see below) and forward the completed response to scanning using document code **COCX**.

Magdalene Talley

Certificates of Correction Branch

703-308-9390 ext. 116

Thank You For Your Assistance

The request for issuing the above-identified correction(s) is hereby:

Note your decision on the appropriate box.

- ☑ **Approved** — **All** changes apply.
- ☐ **Approved in Part** — Specify below which changes **do not** apply.
- ☐ **Denied** — State the reasons for denial below.

Comments: _____

/Thomas Lee/

SPE

2116

Art Unit

SPE RESPONSE FOR CERTIFICATE OF CORRECTION

Paper No.: _____

DATE : February 5, 2008

TO SPE OF : ART UNIT 2800 (2116)

SUBJECT : Request for Certificate of Correction for Appl. No. 10/368669 patent no. 7076673

Please respond to this request for a certificate of correction within 7 days.

Please review the requested changes/corrections as shown in the **COCIN** document(s) in the IFW application image. No new matter should be introduced, nor should the scope or meaning of the claims be changed.

Please complete the response (see below) and forward the completed response to scanning using document code **COCX**.

Magdalene Talley

Certificates of Correction Branch

703-308-9390 ext. 116

Thank You For Your Assistance

The request for issuing the above-identified correction(s) is hereby:

Note your decision on the appropriate box.

- ☑ **Approved** — **All** changes apply.
- ☐ **Approved in Part** — Specify below which changes **do not** apply.
- ☐ **Denied** — State the reasons for denial below.

Comments: _____

/Thomas Lee/

SPE

2116

Art Unit

UNITED STATES PATENT AND TRADEMARK OFFICE

Commissioner for Patents
United States Patent and Trademark Office
P.O. Box 1450
Alexandria, VA 22313-1450
www.uspto.gov

HEWLETT PACKARD COMPANY
P O BOX 272400, 3404 E. HARMONY ROAD
INTELLECTUAL PROPERTY ADMINISTRATION
FORT COLLINS CO 80527-2400

COPY MAILED
JUN 17 2008

In re Application of	:	
Joseph D. Wong	:	
Application No. 10/368,692	:	DECISION ON PETITION
Filed: February 19, 2003	:	
Attorney Docket No. 10013276-1	:	

This is a decision on the petition under the unintentional provisions of 37 CFR 1.137(b), filed May 29, 2007, to revive the above-identified application.

The petition is **GRANTED**.

The two-month period for filing an appeal brief under 37 CFR 41.37 (accompanied by the fee required by 37 CFR 41.20(b)(2)), runs from the date of this decision.

This application became abandoned for failure to timely file a reply within the meaning of 37 CFR 1.113 to the final Office action of October 18, 2006. The proposed reply required for consideration of a petition to revive must be a Notice of Appeal (and appeal fee required by 37 CFR 41.20(b)(2)), an amendment that *prima facie* places the application in condition for allowance, a Request for Continued Examination (RCE) and submission (37 CFR 1.114), or the filing of a continuing application under 37 CFR 1.53(b). See MPEP 711.03(c)(III)(A)(2). No extensions of time pursuant to the provisions of 37 CFR 1.136(a) were obtained. Accordingly, the date of abandonment of this application is January 18, 2007. The Notice of Abandonment was mailed May 2, 2008.

The petition satisfies the requirements of 37 CFR 1.137(b) in that petitioner has supplied (1) the reply in the form of a Notice of Appeal; (2) the petition fee of $1,500; and (3) a proper statement of unintentional delay.

It is not apparent whether the person signing the statement of unintentional delay was in a position to have firsthand or direct knowledge of the facts and circumstances of the delay at issue. Nevertheless, such statement is being treated as having been made as the result of a reasonable inquiry into the facts and circumstances of such delay. See 37 CFR 10.18(b) and Changes to Patent Practice and Procedure; Final Rule Notice, 62 Fed. Reg. 53131, 53178

(October 10, 1997), 1203 Off. Gaz. Pat. Office 63, 103 (October 21, 1997). In the event that such an inquiry has not been made, petitioner must make such an inquiry. If such inquiry results in the discovery that it is not correct that the entire delay in filing the required reply from the due date for the reply until the filing of a grantable petition pursuant to 37 CFR 1.137(b) was unintentional, petitioner must notify the Office.

There is no indication that the person signing the petition was ever given a power of attorney to prosecute the application. If the person signing the petition desires to receive future correspondence regarding this application, the appropriate power of attorney document must be submitted. While a courtesy copy of this decision is being mailed to the person signing the petition, all future correspondence will be directed to the address currently of record until appropriate instructions are received.

In regard to the petition for refund of the petition to revive fees, the request for this refund is improper and the fee will not be refunded. The payment of revival fee is statutory. 35 USC 41(a)(7). In a properly abandoned application, the fee for revival must be paid and cannot be refunded. The requirement for this fee is further established in the governing regulation, 37 CFR 1.137(b). Also, successful prosecution within the period for response is the responsibility of the applicant. 35 USC 133. Action or inaction by the examiner during the period for response does not relieve applicant of this responsibility under the statute. Furthermore, failure to timely receive the advisory action is immaterial here since abandonment occurs at least at the end of the six month period for reply regardless of the considerations of the examiner after final. 37 CFR 1.135(b). Moreover, section 714.12 of the MPEP explains that applicant no longer has any right to unrestricted further prosecution after the final rejection is entered. Accordingly, the fee for the petition to revive will not be refunded.

An extension of time under 37 CFR 1.136 must be filed prior to the expiration of the maximum extendable period for reply. See In re Application of S., 8 USPQ2d 1630, 1631 (Comm'r Pats. 1988). Since the $120 extension of time fee submitted with the petition on May 29, 2007 was subsequent to the maximum extendable period for reply, this fee is unnecessary and will be credited to petitioner's deposit account.

Telephone inquiries concerning this decision should be directed to Terri Williams at (571) 272-2991.

This application is being referred to Technology Center AU 2135 to await the filing of an appeal brief or for such other appropriate reply as may be submitted to continue prosecution of the application.

Chris Bottorff
Petitions Examiner
Office of Petitions

cc: **Scott A. Horstemeyer**
100 Galleria Parkway, Suite 1750
Atlanta, GA 30339

HEWLETT-PACKARD COMPANY
Intellectual Property Administration
P.O. Box 272400
Fort Collins, Colorado 80527-2400

PATENT APPLICATION

ATTORNEY DOCKET NO. 10013276-1

IN THE UNITED STATES PATENT AND TRADEMARK OFFICE

Inventor(s): Joseph D. Wong

Confirmation No.: 3145

Application No.: 10/368,692

Examiner: Pan, Joseph T.

Filing Date: February 19, 2003

Group Art Unit: 2135

Title: Apparatus and Method for Proving Authenticity with Personal Characteristics

Commissioner For Patents
PO Box 1450
Alexandria, VA 22313-1450

PETITION FOR EXTENSION OF TIME

In an Office Action mailed on 2007-05-01, on the above-identified U.S. Patent application, a shortened statutory period of 3 months was set for response. In accordance with 37 CFR 1.136(a), applicant(s) hereby request(s) a:

☒ one month ☐ two month ☐ three month ☐ four month

time extension so that the period to the Office Action expires on 2007-06-01.

Authorization to charge the fee required by 37 CFR 1.17 to Deposit Account 08-2025 appears in the enclosed transmittal letter. At any time during the pendency of this application, please charge any fees required or credit any over payment to Deposit Account 08-2025 pursuant to 37 CFR 1.25. Additionally please charge any fees to Deposit Account 08-2025 under 37 CFR 1.16 through 1.21 inclusive, and any other sections in Title 37 of the Code of Federal Regulations that may regulate fees.

Adjustment date: 06/16/2008 CKHLOK
06/05/2007 SBRYCE 00000002 082025 10368692
02 FC:1251 120.00 CR

Respectfully submitted,

Joseph D. Wong

By: Scott A. Horstemeyer

Attorney/Agent for Applicant(s)

Reg No.: 34,183

Date: May 29, 2007

Telephone: 770-933-9500

I hereby certify that this document is being transmitted to the Patent and Trademark Office via eletronic filing.

Date of Transmission: May 29, 2007

UNITED STATES PATENT & TRADEMARK OFFICE
Washington, D.C. 20231

REQUEST FOR PATENT FEE REFUND

1 Date of Request: 06/13/08

2 Serial/Patent # 10/368,692

	3 Please refund the following fee(s):	4 PAPER NUMBER	5 DATE FILED	6 AMOUNT
	Filing			$
	Amendment			$
X	Extension of Time		05/29/07	$ 120.00
	Notice of Appeal/Appeal			$
	Petition			$
	Issue			$
	Cert of Correction/Terminal Disc.			$
	Maintenance			$
	Assignment			$
	Other			$

7 TOTAL AMOUNT OF REFUND $ 120.00

8 TO BE REFUNDED BY:

	Treasury Check
X	Credit Deposit A/C #:

9 0 8 -- 2 0 2 5

10 REASON:

	Overpayment
	Duplicate Payment
X	No Fee Due (Explanation):

Extension of time unnecessary.

11 REFUND REQUESTED BY:

TYPED/PRINTED NAME: Terri Williams TITLE: Paralegal Specialist

SIGNATURE: [signature] for Terri Williams PHONE: (571) 272-2991

OFFICE: Office of Petitions

****

THIS SPACE RESERVED FOR FINANCE USE ONLY:

APPROVED: [signature] DATE: 6/16/08

Instructions for completion of this form appear on the back. After completion, attach white and yellow copies to the official file and mail or hand-carry to:

Office of Finance
Refund Branch
Crystal Park One, Room 802B

FORM PTO 1577
(01/90)

PTO/SB/66 (03-09)
Approved for use through 03/31/2012. OMB 0651-0016
U.S. Patent and Trademark Office: U.S. DEPARTMENT OF COMMERCE
Under the Paperwork Reduction Act of 1995, no persons are required to respond to a collection of information unless it displays valid OMB control number.

PETITION TO ACCEPT UNINTENTIONALLY DELAYED PAYMENT OF MAINTENANCE FEE IN AN EXPIRED PATENT (37 CFR 1.378(c))

Patent Number	Issue Date (YYYY-MM-DD)	Application Number	Filing Date (YYYY-MM-DD)	Docket Number (if applicable)
6901028	2005-05-31	10368699	2003-02-18	IO-1074US

CAUTION: Maintenance fee (and surcharge, if any) payment must correctly identify: (1) the patent number and (2) the application number of the actual U.S. application leading to issuance of that patent to ensure the fee(s) is/are associated with the correct patent. 37 CFR 1.366(c) and (d).

SMALL ENTITY
☐ Patentee claims, or has previously claimed, small entity status. See 37 CFR 1.27.

LOSS OF ENTITLEMENT TO SMALL ENTITY STATUS
☐ Patentee is no longer entitled to small entity status. See 37 CFR 1.27(g)

NOT Small Entity		Small Entity	
Fee	Code	Fee	Code
◉ 3 ½ year	(1551)	○ 3 ½ year	(2551)
○ 7 ½ year	(1552)	○ 7 ½ year	(2552)
○ 11 ½ year	(1553)	○ 11 ½ year	(2553)

SURCHARGE
The surcharge required by 37 CFR 1.20(i)(2) (Fee Code 1558) must be paid as a condition of accepting unintentionally delayed payment of the maintenance fee.

MAINTENANCE FEE (37 CFR 1.20(e)-(g))
The appropriate maintenance fee must be submitted with this petition.

STATEMENT
THE UNDERSIGNED CERTIFIES THAT THE DELAY IN PAYMENT OF THE MAINTENANCE FEE TO THIS PATENT WAS UNINTENTIONAL

PETITIONER(S) REQUEST THAT THE DELAYED PAYMENT OF THE MAINTENANCE FEE BE ACCEPTED AND THE PATENT REINSTATED

THIS PORTION MUST BE COMPLETED BY THE SIGNATORY OR SIGNATORIES

37 CFR 1.378(d) states: "Any petition under this section must be signed by an attorney or agent registered to practice before the Patent and Trademark Office, or by the patentee, the assignee, or other party in interest."

I certify, in accordance with 37 CFR 1.4(d)(4) that I am

◉ An attorney or agent registered to practice before the Patent and Trademark Office

○ A sole patentee

○ A joint patentee; I certify that I am authorized to sign this submission on behalf of all the other patentees.

○ A joint patentee; all of whom are signing this e-petition

○ The assignee of record of the entire interest

Patent Practitioner			
A signature of the applicant or representative is required in accordance with 37 CFR 1.33 and 10.18. Please see 37 CFR 1.4(d) for the form of the signature			
Signature	/PAUL S. MADAN/	Date (YYYY-MM-DD)	2009-07-22
Name	Paul S. Madan	Registration Number	33011

This collection of information is required by 37 CFR 1.378(c). The information is required to obtain or retain a benefit by the public which is to file (and by the USPTO to process) an application. Confidentiality is governed by 35 U.S.C. 122 and 37 CFR 1.11 and 1.14. This collection is estimated to take 1 hour to complete, including gathering, preparing, and submitting the completed application form to the USPTO. Time will vary depending upon the individual case. Any comments on the amount of time you require to complete this form and/ or suggestions for reducing this burden, should be sent to the Chief Information Officer, U.S. Patent and Trademark Office, U.S. Department of Commerce, P.O. Box 1450, Alexandria, VA 22313-1450. DO NOT SEND FEES OR COMPLETED FORMS TO THIS ADDRESS. **This form can only be used when in conjunction with EFS-Web. If this form is mailed to the USPTO, it may cause delays in reinstating the patent.**

Privacy Act Statement

The Privacy Act of 1974 (P.L. 93-579) requires that you be given certain information in connection with your submission of the attached form related to a patent application or patent. Accordingly, pursuant to the requirements of the Act, please be advised that: (1) the general authority for the collection of this information is 35 U.S.C. 2(b)(2); (2) furnishing of the information solicited is voluntary; and (3) the principal purpose for which the information is used by the U.S. Patent and Trademark Office is to process and/or examine your submission related to a patent application or patent. If you do not furnish the requested information, the U.S. Patent and Trademark Office may not be able to process and/or examine your submission, which may result in termination of proceedings or abandonment of the application or expiration of the patent.

The information provided by you in this form will be subject to the following routine uses:

1. The information on this form will be treated confidentially to the extent allowed under the Freedom of Information Act (5 U.S.C. 552) and the Privacy Act (5 U.S.C. 552a). Records from this system of records may be disclosed to the Department of Justice to determine whether the Freedom of Information Act requires disclosure of these records.

2. A record from this system of records may be disclosed, as a routine use, in the course of presenting evidence to a court, magistrate, or administrative tribunal, including disclosures to opposing counsel in the course of settlement negotiations.

3. A record in this system of records may be disclosed, as a routine use, to a Member of Congress submitting a request involving an individual, to whom the record pertains, when the individual has requested assistance from the Member with respect to the subject matter of the record.

4. A record in this system of records may be disclosed, as a routine use, to a contractor of the Agency having need for the information in order to perform a contract. Recipients of information shall be required to comply with the requirements of the Privacy Act of 1974, as amended, pursuant to 5 U.S.C. 552a(m).

5. A record related to an International Application filed under the Patent Cooperation Treaty in this system of records may be disclosed, as a routine use, to the International Bureau of the World Intellectual Property Organization, pursuant to the Patent Cooperation Treaty.

6. A record in this system of records may be disclosed, as a routine use, to another federal agency for purposes of National Security review (35 U.S.C. 181) and for review pursuant to the Atomic Energy Act (42 U.S.C. 218(c)).

7. A record from this system of records may be disclosed, as a routine use, to the Administrator, General Services, or his/her designee, during an inspection of records conducted by GSA as part of that agency's responsibility to recommend improvements in records management practices and programs, under authority of 44 U.S.C. 2904 and 2906. Such disclosure shall be made in accordance with the GSA regulations governing inspection of records for this purpose, and any other relevant (i.e., GSA or Commerce) directive. Such disclosure shall not be used to make determinations about individuals.

8. A record from this system of records may be disclosed, as a routine use, to the public after either publication of the application pursuant to 35 U.S.C. 122(b) or issuance of a patent pursuant to 35 U.S.C. 151. Further, a record may be disclosed, subject to the limitations of 37 CFR 1.14, as a routine use, to the public if the record was filed in an application which became abandoned or in which the proceedings were terminated and which application is referenced by either a published application, an application open to public inspections or an issued patent.

9. A record from this system of records may be disclosed, as a routine use, to a Federal, State, or local law enforcement agency, if the USPTO becomes aware of a violation or potential violation of law or regulation.

UNITED STATES PATENT AND TRADEMARK OFFICE

Commissioner for Patents
United States Patent and Trademark Office
P.O. Box 1450
Alexandria, VA 22313-1450
www.uspto.gov

In re Patent No. 6901028
Issue Date: May 31,2005
Application No. 10368699
Filed: February 18,2003
Attorney Docket No. IO-1074US

:
:DECISION GRANTING PETITION
:UNDER 37 CFR 1.378(c)
:

This is a decision on the electronic petition, filed July 22,2009 ,under 37 CFR 1.378(c) to accept the unintentionally delayed payment of the 3.5 year maintenance fee for the above-identified patent.

The petition is **GRANTED**.

The maintenance fee is accepted, and the above-identified patent reinstated as of July 22,2009 .
This decision also constitutes notice that the fee has been accepted. An electronic copy of the petition and this decision has been created as an entry in the Image File Wrapper. Nevertheless, petitioner should print and retain an independent copy.

Telephone inquiries related to this electronic decision should be directed to the Electronic Business Center at 1-866-217-9197.

SPE RESPONSE FOR CERTIFICATE OF CORRECTION

Paper No.: _____

DATE : 4-25-06

TO SPE OF : ART UNIT 2821

SUBJECT : Request for Certificate of Correction for Appl. No.: 10/368702 Patent No.: 6806669

Please respond to this request for a certificate of correction within 7 days.

Please review the requested changes/corrections as shown in the **COCIN** document(s) in the IFW application image. No new matter should be introduced, nor should the scope or meaning of the claims be changed.

Please check and Reviewt (drawings)

Please complete the response (see below) and forward the completed response to scanning using document code **COCX**.

E Yung

Certificates of Correction Branch

703-308-9390 ext. _____

Thank You For Your Assistance

The request for issuing the above-identified correction(s) is hereby:

Note your decision on the appropriate box.

- [x] **Approved** — All changes apply.
- [ ] **Approved in Part** — Specify below which changes **do not** apply.
- [ ] **Denied** — State the reasons for denial below.

Comments: _____

SPE

2821

Art Unit

O I P E IAP52
MAR 3 1 2006
PATENT & TRADEMARK OFFICE

IPPG-031a

IN THE UNITED STATES PATENT AND TRADEMARK OFFICE

Patent No. : 6,806,649
Issued : October 19, 2004
Inventor(s) : Scott A. Mollema; David W. Baarman; and Roy W. Kuennen

ATTN CERTIFICATE OF CORRECTIONS BRANCH
Commissioner for Patents
P.O. Box 1450
Alexandria, VA 22313-1450

A request is being made for a Certificate of Correction in the above identified patent which issued with the following errors identified by page and line from the application file.

On Figure 1, reference number "52" should be --12--.
On Figure 5, reference number "18" should be --180--.

Enclosed is the Certificate of Correction Form PTO/SB/44.

Respectfully submitted,

SCOTT A. MOLLEMA ET AL

By: Warner, Norcross & Judd LLP

J. Ray Wood
Registration No. 36,062
900 Fifth Third Center
111 Lyon Street, N.W.
Grand Rapids, MI 49503-2487
(616) 752-2167

1238250

PTO/SB/44 (04-05)
Approved for use through 04/30/2007. OMB 0651-0033
U.S. Patent and Trademark Office; U.S. DEPARTMENT OF COMMERCE
Under the Paperwork Reduction Act of 1995, no persons are required to respond to a collection of information unless it displays a valid OMB control number.
(Also Form PTO-1050)

UNITED STATES PATENT AND TRADEMARK OFFICE
CERTIFICATE OF CORRECTION

PATENT NO. : 6,806,649

APPLICATION NO.: 10/368,702

ISSUE DATE : October 19, 2004

INVENTOR(S) : Scott A. Molema; David W. Baarman; and Roy W. Kuennen

It is certified that an error appears or errors appear in the above-identified patent and that said Letters Patent is hereby corrected as shown below:

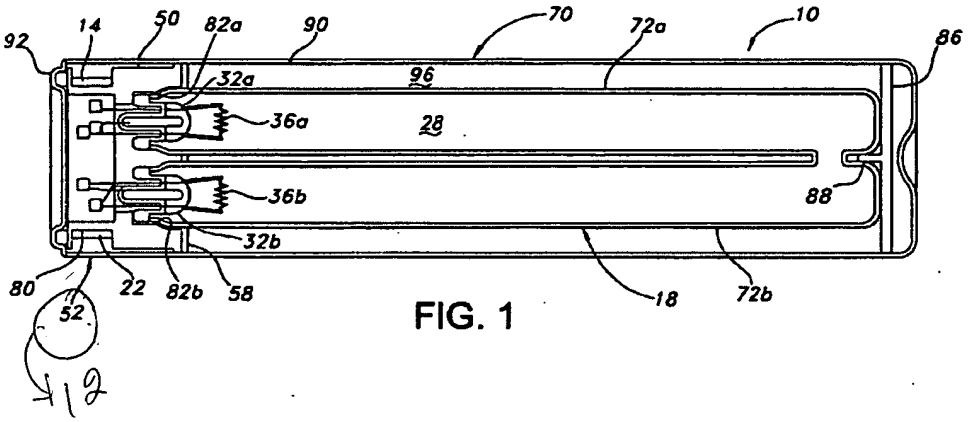

FIG. 1

MAILING ADDRESS OF SENDER (Please do not use customer number below):

WARNER NORCROSS & JUDD LLP
111 Lyon, Suite 900
Grand Rapids, MI 49503

This collection of information is required by 37 CFR 1.322, 1.323, and 1.324. The information is required to obtain or retain a benefit by the public which is to file (and by the USPTO to process) an application. Confidentiality is governed by 35 U.S.C. 122 and 37 CFR 1.14. This collection is estimated to take 1.0 hour to complete, including gathering, preparing, and submitting the completed application form to the USPTO. Time will vary depending upon the individual case. Any comments on the amount of time you require to complete this form and/or suggestions for reducing this burden, should be sent to the Chief Information Officer, U.S. Patent and Trademark Office, U.S. Department of Commerce, P.O. Box 1450, Alexandria, VA 22313-1450. DO NOT SEND FEES OR COMPLETED FORMS TO THIS ADDRESS. SEND TO: Attention Certificate of Corrections Branch, Commissioner for Patents, P.O. Box 1450, Alexandria, VA 22313-1450.

If you need assistance in completing the form, call 1-800-PTO-9199 and select option 2.

OIPE JC10
APR 0 5 2004
PATENT & TRADEMARK OFFICE

STARTER ASSEMBLY FOR A GAS DISCHARGE LAMP
Mollema, et al
10/368,702
AM1133.2

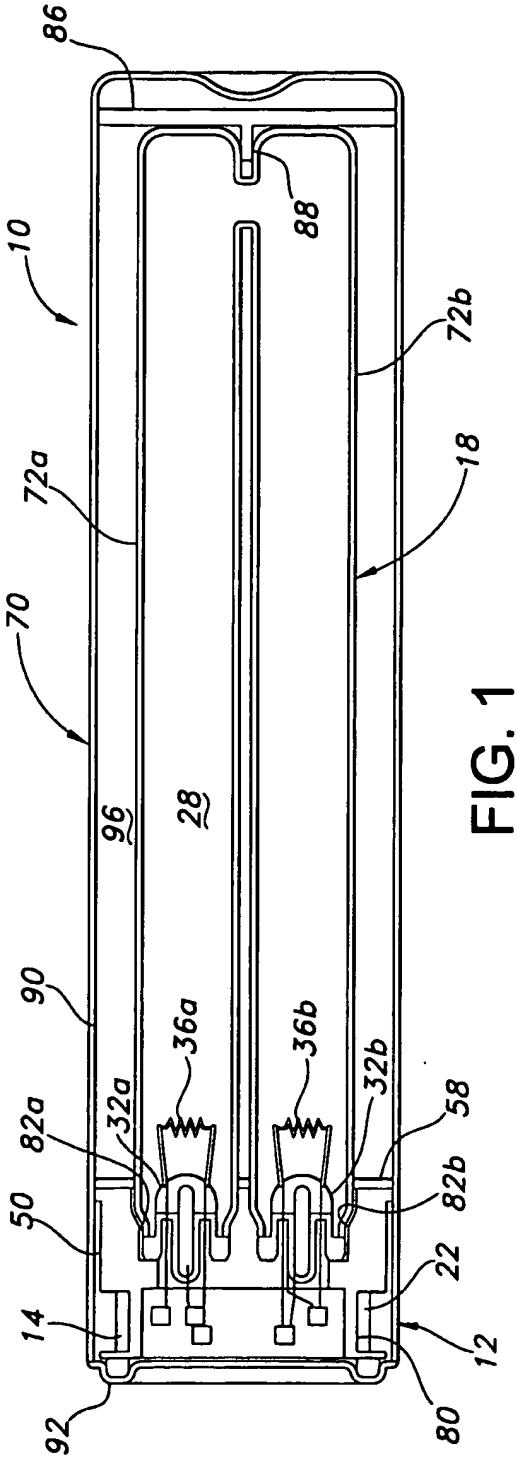

FIG. 1

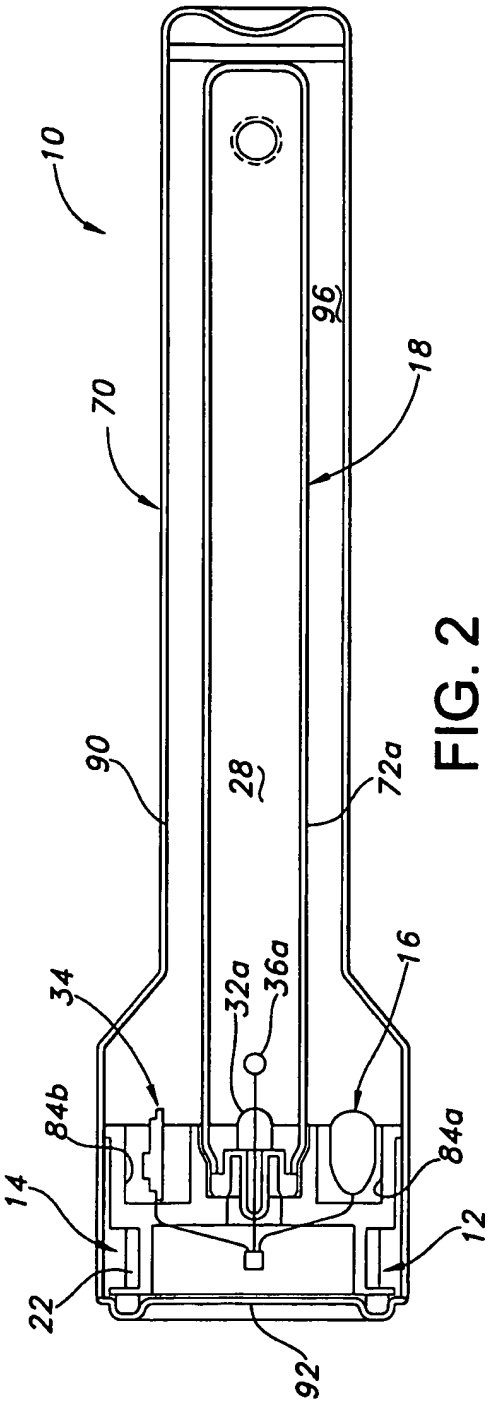

FIG. 2

PTO/SB/44 (04-05)
Approved for use through 04/30/2007. OMB 0651-0033
U.S. Patent and Trademark Office; U.S. DEPARTMENT OF COMMERCE
Under the Paperwork Reduction Act of 1995, no persons are required to respond to a collection of information unless it displays a valid OMB control number.
(Also Form PTO-1050)

UNITED STATES PATENT AND TRADEMARK OFFICE
CERTIFICATE OF CORRECTION

PATENT NO. : 6,806,649

APPLICATION NO.: 10/368,702

ISSUE DATE : October 19, 2004

INVENTOR(S) : Scott A. Molema; David W. Baarman; and Roy W. Kuennen

It is certified that an error appears or errors appear in the above-identified patent and that said Letters Patent is hereby corrected as shown below:

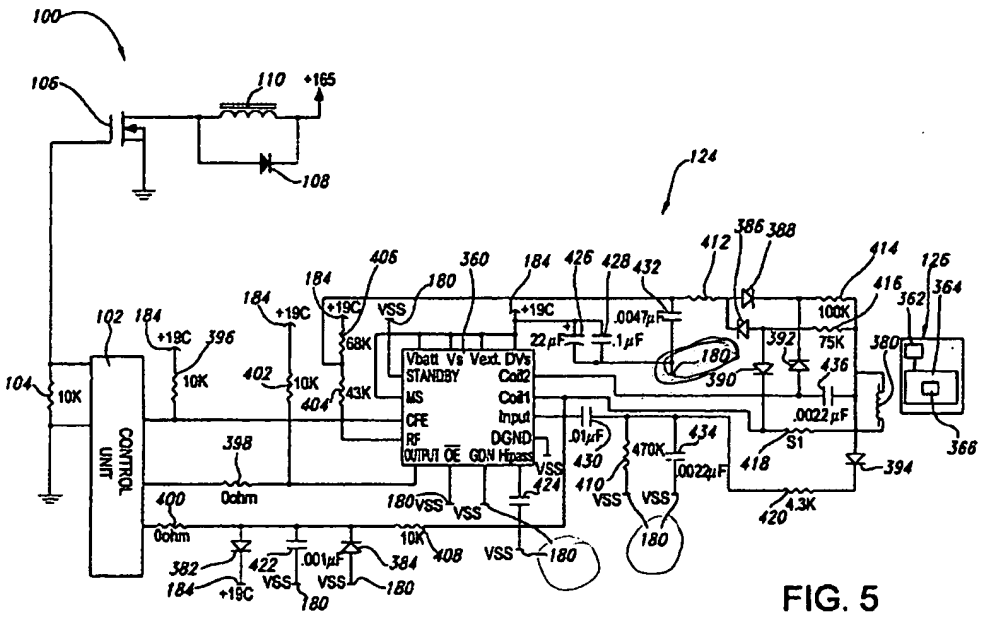

FIG. 5

MAILING ADDRESS OF SENDER (Please do not use customer number below):

WARNER NORCROSS & JUDD
111 Lyon, Suite 900
Grand Rapids, Michigan 49503

This collection of information is required by 37 CFR 1.322, 1.323, and 1.324. The information is required to obtain or retain a benefit by the public which is to file (and by the USPTO to process) an application. Confidentiality is governed by 35 U.S.C. 122 and 37 CFR 1.14. This collection is estimated to take 1.0 hour to complete, including gathering, preparing, and submitting the completed application form to the USPTO. Time will vary depending upon the individual case. Any comments on the amount of time you require to complete this form and/or suggestions for reducing this burden, should be sent to the Chief Information Officer, U.S. Patent and Trademark Office, U.S. Department of Commerce, P.O. Box 1450, Alexandria, VA 22313-1450. DO NOT SEND FEES OR COMPLETED FORMS TO THIS ADDRESS. SEND TO: Attention Certificate of Corrections Branch, Commissioner for Patents, P.O. Box 1450, Alexandria, VA 22313-1450.

If you need assistance in completing the form, call 1-800-PTO-9199 and select option 2.

OIPE JC10
APR 0 5 2004
PATENT & TRADEMARK OFFICE

STARTER ASSEMBLY FOR A GAS DISCHARGE LAMP
Mollema, et al
10/368,702
AM1133.2

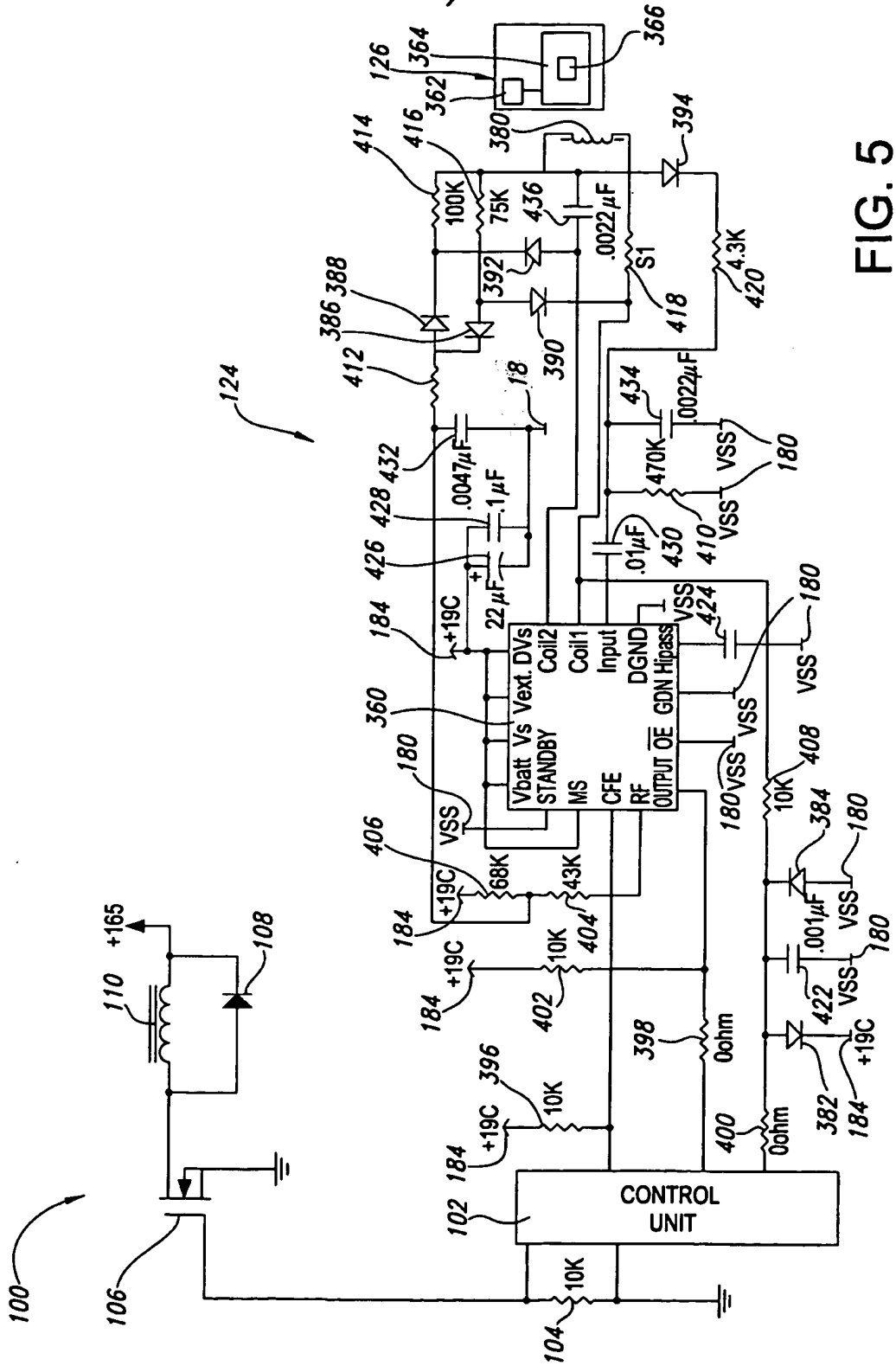

FIG. 5

UNITED STATES PATENT AND TRADEMARK OFFICE

Commissioner for Patents
United States Patent and Trademark Office
P.O. Box 1450
Alexandria, VA 22313-1450
www.uspto.gov

WELSH & KATZ, LTD
120 S RIVERSIDE PLAZA
22ND FLOOR
CHICAGO IL 60606

COPY MAILED

DEC 0 2 2004

OFFICE OF PETITIONS

In re Application of
Wickman et al.
Patent : 6,793,709
Application No. 10/368,707
Filed: February 19, 2003
Issued: September 21, 2004
Attorney Docket Number: 7385-89357

: NOTICE

This is a notice regarding your request filed on November 12, 2004, for acceptance of a fee deficiency submission under 37 CFR 1.28 (c).

37 CFR 1.28 (c) states: "The deficiency is based on the amount of the fee, for other than a small entity, in effect at the time the deficiency is paid in full." Accordingly, the fee deficiency submission under 37 CFR 1.28 is hereby accepted.

The change in status to a large entity has been entered and made of record.

Charlema R. Grant
Petitions Attorney
Office of Petitions

SPE RESPONSE FOR CERTIFICATE OF CORRECTION

Paper No.: _____

DATE : March 15, 2007

TO SPE OF : ART UNIT 2825

SUBJECT : Request for Certificate of Correction for Appl. No. 10/368711 patent No.: 7082581

Please respond to this request for a certificate of correction within 7 days.

Please review the requested changes/corrections as shown in the **COCIN** document(s) in the IFW application image. No new matter should be introduced, nor should the scope or meaning of the claims be changed.

Please complete the response (see below) and forward the completed response to scanning using document code **COCX**.

Magdalene Talley

Certificates of Correction Branch

703-308-9390 ext. 116

Thank You For Your Assistance

The request for issuing the above-identified correction(s) is hereby:

Note your decision on the appropriate box.

- ☒ **Approved** — **All** changes apply.
- ☐ **Approved in Part** — Specify below which changes **do not** apply.
- ☐ **Denied** — State the reasons for denial below.

Comments: Certificate of Correction filed 2/22/07 has been approved.

JACK CHIANG
SUPERVISORY PATENT EXAMINER

SPE

2825
Art Unit

UNITED STATES PATENT AND TRADEMARK OFFICE

Commissioner for Patents
United States Patent and Trademark Office
P.O. Box 1450
Alexandria, VA 22313-1450
www.uspto.gov

MARIO D. THERIAULT
812 HWY. 101 NASONWORTH
FREDERICTON NB E3C 2B5 CA
CANADA

COPY MAILED

FEB 0 2 2006

OFFICE OF PETITIONS

In re Patent No. 6,933,023 :
Issue Date: August 23, 2005 :
Application No. 10/368,741 : ON PETITION
Filed: February 20, 2003 :
Attorney Docket No. 23029 :

This is a decision on the petition filed September 1, 2005, under 37 CFR 1.183, which is being treated as a petition under 37 CFR 3.81(b)[1] to correct the assignee on the front page of the above-identified patent by way of a Certificate of Correction.

The petition is granted.

Telephone inquiries concerning this matter may be directed to the undersigned at (571) 272-3208. Any questions concerning the issuance of the Certificate of Correction should be directed to the Certificates of Correction Branch at (703) 305-8309.

This matter is being referred to the Certificates of Correction Branch for issuance of the requested Certificate of Correction.

Karen Creasy

Karen Creasy
Petitions Examiner
Office of Petitions
Office of the Deputy Commissioner
for Patent Examination Policy

[1]See Official Gazette of June 22, 2004

UNITED STATES PATENT AND TRADEMARK OFFICE

COMMISSIONER FOR PATENTS
UNITED STATES PATENT AND TRADEMARK OFFICE
P.O. BOX 1450
ALEXANDRIA, VA 22313-1450
WWW.USPTO.GOV

Paper No. 5

Robert N. O'Brien
2614 Queenswood Dr.
Victoria BC V8N 1X5 CA CANADA

COPY MAILED
MAR 12 2004
OFFICE OF PETITIONS

In re Application of
Robert N. O'Brien
Application No. 10/368,747
Filed: February 20, 2003
Title: MELT-PROCESSED POWDER CONTAINING PARTICLES' REPULSION AGENT, EVAPORATION RETARDANT, AND MEANS FOR BENEFIT TO PLANT CULTIVATION AND/OR ANIMAL HUSBANDRY

DECISION ON PETITION

This is a decision on the petition filed February 23, 2004 under 37 C.F.R. §1.137(b), which is properly treated as a petition to withdraw the holding of abandonment, pursuant to 37 C.F.R. §1.181(a).

The above-identified application became abandoned for failure to reply to the Notice to File Corrected Application Papers (Notice), mailed April 21, 2003, which indicated that replacement claims, a replacement abstract, and additional claim fees would be required. The Notice set a shortened statutory period for reply of two (2) months. No reply, and no extensions of time pursuant to 37 CFR 1.136 were received. Accordingly, the above-identified application became abandoned on June 22, 2003. A Notice of Abandonment was mailed February 6, 2004.

In response, Applicant filed the present petition. Petitioner states that no Notice was ever received.

The showing in the instant petition is not sufficient to withdraw the holding of abandonment.

The relevant portion of the MPEP:

MPEP 711.03(c) states, in part:

PETITION TO WITHDRAW HOLDING OF ABANDONMENT BASED ON FAILURE TO RECEIVE OFFICE ACTION

In Delgar v. Schulyer, 172 USPQ 513 (D.D.C. 1971), the court decided that the Office should mail a new Notice of Allowance in view of the evidence presented in support of the contention that the applicant's representative did not receive the original Notice of Allowance. Under the reasoning of Delgar, an allegation that an Office action was never received may be considered in a petition to withdraw the holding of abandonment. If adequately supported, the Office may grant the petition to withdraw the holding of abandonment and remail the Office action. That is, the reasoning of Delgar is applicable regardless of whether an application is held abandoned for failure to timely pay the issue fee (35 U.S.C. 151) or for failure to prosecute (35 U.S.C. 133).

To minimize costs and burdens to practitioners and the Office, the Office has modified the showing required to establish nonreceipt of an Office action. The showing required to establish nonreceipt of an Office communication must include a statement from the practitioner stating that the Office communication was not received by the practitioner and attesting to the fact that a search of the file jacket and docket records indicates that the Office communication was not received. A copy of the docket record where the nonreceived Office communication would have been entered had it been received and docketed must be attached to and referenced in practitioner's statement. For example, if a three month period for reply was set in the nonreceived Office action, a copy of the docket report showing all replies docketed for a date three months from the mail date of the nonreceived Office action must be submitted as documentary proof of nonreceipt of the Office action. See Notice entitled "Withdrawing the Holding of Abandonment When Office Actions Are Not Received," 1156 O.G. 53 (November 16, 1993).

The showing outlined above may not be sufficient if there are circumstances that point to a conclusion that the Office action may have been lost after receipt rather than a conclusion that the Office action was lost in the mail (e.g., if the practitioner has a history of not receiving Office actions).

Evidence of nonreceipt of an Office communication or action (e.g., Notice of Abandonment or an advisory action) other than that action to which reply was required to avoid abandonment would not warrant withdrawal of the holding of abandonment. Abandonment takes place by operation of law for failure to reply to an Office action or timely pay the issue fee, not by operation of the mailing of a Notice of Abandonment. See Lorenz v. Finkl, 333 F.2d 885, 889-90, 142 USPQ 26, 29-30 (CCPA 1964); Krahn v. Commissioner, 15 USPQ2d 1823, 1824 (E.D. Va 1990); In re Application of Fischer, 6 USPQ2d 1573, 1574 (Comm'r Pat. 1988).

Two additional procedures are available for reviving an application that has become abandoned due to a failure to reply to an Office Action: (1) a petition under 37 CFR 1.137(a) based upon unavoidable delay; and (2) a petition under 37 CFR 1.137(b) based on unintentional delay.

See also 1156 O.G. 53 (October 25, 1993), which may be viewed at http://www.uspto.gov/web/offices/com/sol/og/con/files/cons074.htm.

Petitioner must state that the Office communication was not received and that he searched the place where he normally would keep such communications and could not find it. Petitioner must explain his system for keeping track of patent matters – where he keeps the correspondence[1]; where he writes down due dates[2]; how he knows replies are due, etc. In essence, Petitioner must explain how he reminds himself of response due dates and show that the Notice was not entered into that system. The Office would like to see documentary evidence and records as may exist which would substantiate that Petitioner exercised due diligence with respect to his most important business.

As such, this petition is **DISMISSED**.

---

1 Does the Petitioner have a file/some means of organization where he keeps correspondence pertaining to this application?

2 This need not be a log. This may be in the form of a calendar or date book.

Any request for reconsideration of this decision must be submitted within **TWO (2) MONTHS** from the mail date of this decision. Extensions of time under 37 CFR 1.136(a) are permitted. The reconsideration request should include a cover letter entitled "Renewed Petition under 37 C.F.R. §1.181(a)."

Since Petitioner has stated that he did not receive the Notice of April 21, 2003, a copy is enclosed.

The reply to this letter may be submitted by mail[3], hand-delivery[4], or facsimile[5].

The reply should display "Please deliver to Paul Shanoski, c/o Office of Petitions" in a prominent manner. The Petitioner may wish to consider telephoning the undersigned at the number provided below to confirm that the documents were delivered to the undersigned. Please note that the delivery process within the PTO can take as much as three weeks.

The application file will be retained in the Office of Petitions for two (2) months.

Telephone inquiries regarding *this decision* should be directed to the undersigned at (703) 305-0011.

Paul Shanoski
Attorney
Office of Petitions
United States Patent and Trademark Office

Encl. Notice of April 21, 2003

3 Mail Stop Petition, Commissioner for Patents, United States Patent and Trademark Office, P.O. Box 1450, Alexandria, VA, 22313-1450.
4 Customer Window, Mail Stop Petition, Crystal Plaza Two, Lobby, Room 1B03, Arlington, Virginia 22202.
5 (703) 872-9306 - please note this is a central facsimile number, and as such, there will be a delay in the delivery of the facsimile to the undersigned.

UNITED STATES PATENT AND TRADEMARK OFFICE

COMMISSIONER FOR PATENTS
UNITED STATES PATENT AND TRADEMARK OFFICE
P.O. BOX 1450
ALEXANDRIA, VA 22313-1450
WWW.USPTO.GOV

Paper No. 7

Robert N. O'Brien
2614 Queenswood Dr.
Victoria BC V8N 1X5 CA CANADA

COPY MAILED
APR 16 2004
OFFICE OF PETITIONS

In re Application of
Robert N. O'Brien
Application No. 10/368,747
Filed: February 20, 2003
Title: MELT-PROCESSED POWDER CONTAINING PARTICLES' REPULSION AGENT, EVAPORATION RETARDANT, AND MEANS FOR BENEFIT TO PLANT CULTIVATION AND/OR ANIMAL HUSBANDRY

DECISION ON RENEWED PETITION

This is a decision on the renewed petition filed pursuant to 37 C.F.R. §1.181(a), filed March 30, 2004, to withdraw the holding of abandonment.

The above-identified application became abandoned for failure to reply to the Notice to File Corrected Application Papers (Notice), mailed April 21, 2003, which indicated that replacement claims, a replacement abstract, and additional claim fees would be required. The Notice set a shortened statutory period for reply of two (2) months. No reply, and no extensions of time pursuant to 37 CFR 1.136 were received. Accordingly, the above-identified application became abandoned on June 22, 2003. A Notice of Abandonment was mailed February 6, 2004.

In response, Applicant filed the original petition on February 23, 2004, which was dismissed via the mailing of a decision on March 12, 2004, for failure to establish that the notice was ever received.

The statement Petitioner has submitted on renewed petition has been considered, and the renewed petition under 37 CFR §1.181(a) is hereby **GRANTED**. The holding of abandonment is hereby **WITHDRAWN**.

The application is being forwarded to the Technology Center 1600, for consideration of the replacement claims and the replacement abstract submitted with this renewed petition.

Telephone inquiries regarding *this decision* should be directed to the undersigned at (703) 305-0011.

Paul Shanoski
Senior Attorney
Office of Petitions
United States Patent and Trademark Office

UNITED STATES PATENT AND TRADEMARK OFFICE

Commissioner for Patents
United States Patent and Trademark Office
P.O. Box 1450
Alexandria, VA 22313-1450
www.uspto.gov

Robert N. O'Brien
2614 Queenswood Dr.
Victoria BC V8N 1X5
CANADA

COPY MAILED
JUN 1 3 2006
OFFICE OF PETITIONS

COPY MAILED
JUN 2 2 2006
OFFICE OF PETITIONS

In re Application of
Robert O'Brien
Application No. 10/368,747
Filed: February 20, 2003
Title: Melt-Processed Powder Containing Particles' Repulsion Agent, Evaporation Retardant, and Means for Benefit to Plant Cultivation and/or Animal Husbandry

ON PETITION

This is a decision on the petition under 37 CFR 1.137(b), filed October 7, 2004. This petition is being treated under 37 CFR 1.181.

It is not apparent why a petition was filed on October 7, 2004. A review of the record shows that a Notice to File Corrected Papers was mailed on April 21, 2003 setting an extendable two month period of reply. A Notice of Abandonment was mailed on February 6, 2004. A petition under 37 CFR 1.137(b) was filed on February 23, 2004. A petition decision dismissing the petition was mailed on March 12, 2004. A request for reconsideration was submitted on March 25, 2004 and on March 30, 2004. A petition decision withdrawing the holding of abandonment was mailed on April 16, 2004. A Notice of withdrawal of the abandonment was mailed on July 8, 2004.

As such on October 7, 2004 the application was not abandoned. Accordingly, this petition is being **dismissed** as inappropriate.

However, it is noted the application is currently abandoned. A non-final Office Action was mailed December 22, 2004 setting an extendable three month period of reply. No extensions of time were obtained under the provisions of 37 CFR 1.136(a). Accordingly, this application became abandoned on March 22, 2005.

A grantable petition under 37 CFR 1.137(b) must be accompanied by: (1) the required reply, unless previously filed; (2) the petition fee as set forth in 37 CFR 1.17(m)(currently $1500 other than small entity/$750 small entity) ; (3) a statement that "the entire delay in filing the required reply from the due date for the reply until the filing of a grantable petition pursuant to 37 CFR 1.137(b) was unintentional"; and (4) any terminal disclaimer (and fee as set forth in 37 CFR 1.20(d)) required by 37 CFR 1.137(c). Where there is a question as to whether either the abandonment or the delay

in filing a petition under 37 CFR 1.137 was unintentional, the Director may require additional information. See MPEP 711.03 (c)(III)(c) and (D).

If petitioner contends the non-final Office Action was never received a petition under 37 CFR 1.181 may be appropriate. The showing required to establish the failure to receive an Office communication must include a statement from the practitioner stating that the Office communication was not received by the practitioner and attesting to the fact that a search of the file jacket and docket records indicates that the Office communication was not received. A copy of the docket record where the non-received Office communication would have been entered had it been received and docketed must be attached to and referenced in practitioner's statement. For example, if a three month period for reply was set in the nonreceived Office action, a copy of the docket report showing all replies docketed for a date three months from the mail date of the nonreceived Office action must be submitted as documentary proof of non-receipt of the Office action. The showing outlined above may not be sufficient if there are circumstances that point to a conclusion that the Office Communication may have been lost after receipt rather than a conclusion that the Office Communication was lost in the mail.

For petitioner's convenience a copy of the non-final Office Action and Notice of Abandonment is being provided.

Further correspondence with respect to this matter should be addressed as follows:

By mail:	Mail Stop Petition Commissioner for Patents P.O. Box 1450 Alexandria, VA 22313-1450
By facsimile:	(571) 273-8300
By delivery service: (FedEx, UPS, DHL, etc.)	U.S. Patent and Trademark Office Customer Window, Mail Stop Petition Randolph Building 401 Dulany Street Alexandria, VA 22314

Telephone inquiries concerning this matter should be directed to the undersigned at (571) 272-3215.

Charlema R. Grant

Charlema R. Grant
Petitions Attorney
Office of Petitions

enclosures

UNITED STATES PATENT AND TRADEMARK OFFICE

Commissioner for Patents
United States Patent and Trademark Office
P.O. Box 1450
Alexandria, VA 22313-1450
www.uspto.gov

ROBERT N. O'BRIEN
2614 QUEENSWOOD DR.
VICTORIA, BC V8N 1X5 CA CANADA

COPY MAILED

JUN 29 2006

OFFICE OF PETITIONS

In re Application of :
O'Brien, Robert N. :
Application No. 10/368,747 :
Filed: February 20, 2003 :
Title: Melt-Processed Powder Containing :
Particles' Repulsion Agent, Evaporation
Retardant, And Means For Benefit To Plant
Cultivation And/Or Animal Husbandry

ON PETITION

This is a decision on the petition under 37 CFR 1.102(c)(1), filed October 7, 2004, to make the above-identified application special based on applicant's age as set forth in M.P.E.P. § 708.02, Section IV.

The petition is **GRANTED**.

A grantable petition to make an application special under 37 CFR 1.102(c)(1) and MPEP § 708.02, Section IV: Applicant's Age must be accompanied by evidence showing that at least one of the applicants is 65 years of age, or more, such as a birth certificate or a statement by applicant. No fee is required.

The instant petition includes copies of the applicant's driver's license and birth certificate. Accordingly, the above-identified application has been accorded "special" status.

Telephone inquiries concerning this decision should be directed to the undersigned at 571-272-3206. All other inquiries concerning either the examination or status of the application should be directed to the Technology Center.

This matter is being referred to the Technology Center Art Unit 1615 for action on the merits commensurate with this decision.

Liana Chase
Petitions Examiner
Office of Petitions

PTO/SB/66 (03-09)
Approved for use through 03/31/2012. OMB 0651-0016
U.S. Patent and Trademark Office: U.S. DEPARTMENT OF COMMERCE
Under the Paperwork Reduction Act of 1995, no persons are required to respond to a collection of information unless it displays valid OMB control number.

PETITION TO ACCEPT UNINTENTIONALLY DELAYED PAYMENT OF MAINTENANCE FEE IN AN EXPIRED PATENT (37 CFR 1.378(c))

Patent Number	Issue Date (YYYY-MM-DD)	Application Number	Filing Date (YYYY-MM-DD)	Docket Number (if applicable)
7008704	2006-03-07	10368749	2003-02-18	ID 024910

CAUTION: Maintenance fee (and surcharge, if any) payment must correctly identify: (1) the patent number and (2) the application number of the actual U.S. application leading to issuance of that patent to ensure the fee(s) is/are associated with the correct patent. 37 CFR 1.366(c) and (d).

SMALL ENTITY
☐ Patentee claims, or has previously claimed, small entity status. See 37 CFR 1.27.

LOSS OF ENTITLEMENT TO SMALL ENTITY STATUS
☐ Patentee is no longer entitled to small entity status. See 37 CFR 1.27(g)

NOT Small Entity		Small Entity	
Fee	Code	Fee	Code
◉ 3 ½ year	(1551)	○ 3 ½ year	(2551)
○ 7 ½ year	(1552)	○ 7 ½ year	(2552)
○ 11 ½ year	(1553)	○ 11 ½ year	(2553)

SURCHARGE
The surcharge required by 37 CFR 1.20(i)(2) (Fee Code 1558) must be paid as a condition of accepting unintentionally delayed payment of the maintenance fee.

MAINTENANCE FEE (37 CFR 1.20(e)-(g))
The appropriate maintenance fee must be submitted with this petition.

STATEMENT
THE UNDERSIGNED CERTIFIES THAT THE DELAY IN PAYMENT OF THE MAINTENANCE FEE TO THIS PATENT WAS UNINTENTIONAL

PETITIONER(S) REQUEST THAT THE DELAYED PAYMENT OF THE MAINTENANCE FEE BE ACCEPTED AND THE PATENT REINSTATED

THIS PORTION MUST BE COMPLETED BY THE SIGNATORY OR SIGNATORIES

37 CFR 1.378(d) states: "Any petition under this section must be signed by an attorney or agent registered to practice before the Patent and Trademark Office, or by the patentee, the assignee, or other party in interest."

I certify, in accordance with 37 CFR 1.4(d)(4) that I am

◉ An attorney or agent registered to practice before the Patent and Trademark Office

○ A sole patentee

○ A joint patentee; I certify that I am authorized to sign this submission on behalf of all the other patentees.

○ A joint patentee; all of whom are signing this e-petition

○ The assignee of record of the entire interest

Patent Practitioner			
A signature of the applicant or representative is required in accordance with 37 CFR 1.33 and 10.18. Please see 37 CFR 1.4(d) for the form of the signature			
Signature	/DJCushing/	Date (YYYY-MM-DD)	2010-07-06
Name	David J. Cushing	Registration Number	28703

This collection of information is required by 37 CFR 1.378(c). The information is required to obtain or retain a benefit by the public which is to file (and by the USPTO to process) an application. Confidentiality is governed by 35 U.S.C. 122 and 37 CFR 1.11 and 1.14. This collection is estimated to take 1 hour to complete, including gathering, preparing, and submitting the completed application form to the USPTO. Time will vary depending upon the individual case. Any comments on the amount of time you require to complete this form and/ or suggestions for reducing this burden, should be sent to the Chief Information Officer, U.S. Patent and Trademark Office, U.S. Department of Commerce, P.O. Box 1450, Alexandria, VA 22313-1450. DO NOT SEND FEES OR COMPLETED FORMS TO THIS ADDRESS. **This form can only be used when in conjunction with EFS-Web. If this form is mailed to the USPTO, it may cause delays in reinstating the patent.**

Privacy Act Statement

The Privacy Act of 1974 (P.L. 93-579) requires that you be given certain information in connection with your submission of the attached form related to a patent application or patent. Accordingly, pursuant to the requirements of the Act, please be advised that: (1) the general authority for the collection of this information is 35 U.S.C. 2(b)(2); (2) furnishing of the information solicited is voluntary; and (3) the principal purpose for which the information is used by the U.S. Patent and Trademark Office is to process and/or examine your submission related to a patent application or patent. If you do not furnish the requested information, the U.S. Patent and Trademark Office may not be able to process and/or examine your submission, which may result in termination of proceedings or abandonment of the application or expiration of the patent.

The information provided by you in this form will be subject to the following routine uses:

1. The information on this form will be treated confidentially to the extent allowed under the Freedom of Information Act (5 U.S.C. 552) and the Privacy Act (5 U.S.C. 552a). Records from this system of records may be disclosed to the Department of Justice to determine whether the Freedom of Information Act requires disclosure of these records.

2. A record from this system of records may be disclosed, as a routine use, in the course of presenting evidence to a court, magistrate, or administrative tribunal, including disclosures to opposing counsel in the course of settlement negotiations.

3. A record in this system of records may be disclosed, as a routine use, to a Member of Congress submitting a request involving an individual, to whom the record pertains, when the individual has requested assistance from the Member with respect to the subject matter of the record.

4. A record in this system of records may be disclosed, as a routine use, to a contractor of the Agency having need for the information in order to perform a contract. Recipients of information shall be required to comply with the requirements of the Privacy Act of 1974, as amended, pursuant to 5 U.S.C. 552a(m).

5. A record related to an International Application filed under the Patent Cooperation Treaty in this system of records may be disclosed, as a routine use, to the International Bureau of the World Intellectual Property Organization, pursuant to the Patent Cooperation Treaty.

6. A record in this system of records may be disclosed, as a routine use, to another federal agency for purposes of National Security review (35 U.S.C. 181) and for review pursuant to the Atomic Energy Act (42 U.S.C. 218(c)).

7. A record from this system of records may be disclosed, as a routine use, to the Administrator, General Services, or his/her designee, during an inspection of records conducted by GSA as part of that agency's responsibility to recommend improvements in records management practices and programs, under authority of 44 U.S.C. 2904 and 2906. Such disclosure shall be made in accordance with the GSA regulations governing inspection of records for this purpose, and any other relevant (i.e., GSA or Commerce) directive. Such disclosure shall not be used to make determinations about individuals.

8. A record from this system of records may be disclosed, as a routine use, to the public after either publication of the application pursuant to 35 U.S.C. 122(b) or issuance of a patent pursuant to 35 U.S.C. 151. Further, a record may be disclosed, subject to the limitations of 37 CFR 1.14, as a routine use, to the public if the record was filed in an application which became abandoned or in which the proceedings were terminated and which application is referenced by either a published application, an application open to public inspections or an issued patent.

9. A record from this system of records may be disclosed, as a routine use, to a Federal, State, or local law enforcement agency, if the USPTO becomes aware of a violation or potential violation of law or regulation.

UNITED STATES PATENT AND TRADEMARK OFFICE

Commissioner for Patents
United States Patent and Trademark Office
P.O. Box 1450
Alexandria, VA 22313-1450
www.uspto.gov

In re Patent No. 7008704
Issue Date: March 7,2006
Application No. 10368749
Filed: February 18,2003
Attorney Docket No. 2309.67377

:DECISION GRANTING PETITION
:UNDER 37 CFR 1.378(c)

This is a decision on the electronic petition, filed July 6,2010 ,under 37 CFR 1.378(c) to accept the unintentionally delayed payment of the 3.5 year maintenance fee for the above-identified patent.

The petition is **GRANTED**.

The maintenance fee is accepted, and the above-identified patent reinstated as of July 6,2010 .
This decision also constitutes notice that the fee has been accepted. An electronic copy of the petition and this decision has been created as an entry in the Image File Wrapper. Nevertheless, petitioner should print and retain an independent copy.

Telephone inquiries related to this electronic decision should be directed to the Electronic Business Center at 1-866-217-9197.

UNITED STATES PATENT AND TRADEMARK OFFICE

Commissioner for Patents
United States Patent and Trademark Office
P.O. Box 1450
Alexandria, VA 22313-1450
www.uspto.gov

SCHWEGMAN, LUNDBERG, WOESSNER & KLUTH, P.A.
P.O. BOX 2938
MINNEAPOLIS, MN 55402

COPY MAILED
NOV 22 2006
OFFICE OF PETITIONS

In re Application of	:	
BONTRAGER, et al.	:	
Application No. 10/368,757	:	DECISION ON PETITION
Filed: February 18, 2003	:	TO WITHDRAW
Attorney Docket No. H0002483	:	FROM RECORD
	:	

This is a decision on the Request to Withdraw as attorney or agent under 37 C.F.R. § 1.36(b) or 37 C.F.R. § 10.40 filed August 30, 2006.

The request is **NOT APPROVED**.

A review of the file record indicates that SCHWEGMAN, LUNDBERG, WOESSNER & KLUTH, P.A. does not have power of attorney in this patent application nor is there any statement or evidence of record of employment in or otherwise being engaged in the proceedings in this patent application. Accordingly, the request to withdraw under 37 C.F.R. § 1.36(b) is not applicable.

All future communications from the Office will continue to be directed to the below-listed address until otherwise properly notified by the applicant.

Telephone inquires concerning this decision should be directed to the undersigned at 571-272-6825.

P Volpe

Patricia Volpe
Petitions Examiner
Office of Petitions

cc: **HONEYWELL INTERNATIONAL INC.**
101 COLUMBIA ROAD
P.O. BOX 2245
MORRISTOWN, NJ 07962-2245

UNITED STATES PATENT AND TRADEMARK OFFICE

COMMISSIONER FOR PATENTS
UNITED STATES PATENT AND TRADEMARK OFFICE
P.O. BOX 1450
ALEXANDRIA, VA 22313-1450
WWW.USPTO.GOV

Paper No. 6

MOORE, HANSEN & SUMNER
2900 WELLS FARGO CENTER
90 SOUTH SEVENTH STREET
MINNEAPOLIS, MN 55402

COPY MAILED

SEP 12 2003

OFFICE OF PETITIONS

In re Application of
Roger A. Hansen
Application No. 10/368,772
Filed: December 8, 2000
Attorney Docket No. F5-006-04-US

DECISION GRANTING PETITION

This is a decision on the petition filed July 31, 2003, requesting that the above-identified application be accorded a filing date of December 8, 2000.

On December 8, 2000, the above-identified application was filed. On April 24, 2003, the Office of Initial Patent Examination mailed a "Notice to File Corrected Application Papers" stating that an abstract was required and allowing a two month period for reply. A response was filed on May 6, 2003. On June 5, 2003, a "Notice of Incomplete Nonprovisional Application" (the "Notice"), stating that the application had not been accorded a filing date as the application was deposited without drawings and that the filing date would be the date the of receipt of the omitted drawings. A communication titled "Withdrawal of Previously Sent Notice" was also mailed on June 5, 2003, indicating that the notice of April 24, 2003, was sent in error and is withdrawn.

In response, on July 31, 2003, applicants filed the present petition, four (4) sheet of drawings, the "Utility Patent Application Transmittal" that accompanied the application as originally filed, and other evidentiary documents. The petition is also accompanied by a copy of the applicants' postcard receipt acknowledging receipt of four (4) sheets of drawings in the United States Patent and Trademark Office (Office) on December 8, 2000. Applicants request that the application, including the four (4) sheets of drawings, be accorded a filing date of December 8, 2000.

Upon review of the record, the four (4) sheets of drawings, deposited December 8, 2000, have not been located among the application papers. However, the evidence is convincing that the application papers deposited December 8, 2000, included four (4) sheets of drawings, which were subsequently misplaced by the Office. Therefore, the application, including the four (4) sheets of drawings, were complete on filing and entitled to a filing date of December 8, 2000.

Accordingly, the petition is granted.

Applicant is advised that the Notice of Incomplete Nonprovisional Application was sent in error and is vacated. Therefore, no petition fee is necessary and the fee of $130.00 will be refunded, in due course.

The application file is being returned to the Office of Initial Patent Examination for further processing with a filing date of December 8, 2000, using the four (4) sheets of drawings submitted on December 8, 2000, and indicating in the Office records that four (4) sheets of drawings were included on the filing date.

Any inquiries related to this decision should be directed to the undersigned at (703)305-0010

Kenya A. McLaughlin

Kenya A. McLaughlin
Petitions Attorney
Office of Petitions

UNITED STATES PATENT AND TRADEMARK OFFICE

Commissioner for Patents
United States Patent and Trademark Office
P.O. Box 1450
Alexandria, VA 22313-1450
www.uspto.gov

James L. Katz
BRINKS HOFER GILSON & LIONE
P.O. BOX 10395
CHICAGO, IL 60610

COPY MAILED
MAR 2 0 2007
OFFICE OF PETITIONS

In re Application of

Dreschel, et al.

Application No. 10/368,774

Filed: February 18, 2003

Attorney Docket No. 98P82216US04

DECISION ON PETITION

This is a decision on the petition under 37 CFR 1.137(b), filed August 23, 2006, and in supplement on August 25, 2006, to revive the above-identified application.

The petition is **GRANTED**.

The above-cited application became abandoned for failure to reply in a timely manner to the non-final Office action mailed August 11, 2005, which set a shortened statutory period for reply of three (3) months. No extensions of time were obtained within the allowable period. Accordingly, the application became abandoned on November 12, 2005. A Notice of Abandonment was mailed on August 10, 2006.

The amendment filed August 23, 2006, is noted and made of record.

It is not apparent whether the person signing the statement of unintentional delay was in a position to have firsthand or direct knowledge of the facts and circumstances of the delay at issue. Nevertheless, such statement is being treated as having been made as the result of a reasonable inquiry into the facts and circumstances of such delay. See 37 CFR 10.18(b) and Changes to Patent Practice and Procedure; Final Rule Notice, 62 Fed. Reg. 53131, 53178 (October 10, 1997), 1203 Off. Gaz. Pat. Office 63, 103 (October 21, 1997). In the event that such an inquiry has not been made, petitioner must make such an inquiry. If such inquiry results in the discovery that it is not correct that the entire delay in filing the required reply from the due date for the reply until the filing of a grantable petition pursuant to 37 CFR 1.137(b) was unintentional, petitioner must notify the Office.

There is no indication that the person signing the instant petition was ever given a power of attorney or authorization of agent to prosecute the above-identified application[1]. If the person signing the instant petition desires to receive future correspondence regarding this application,

[1] The request to change the correspondence address of record filed August 23, 2006, is noted but cannot be entered as the request is signed by an attorney that is not of record in this application according to USPTO records.

the appropriate power of attorney or authorization of agent must be submitted. While a courtesy copy of this decision is being mailed to the person signing the instant petition, all future correspondence will be directed to the address of currently of record until such time as appropriate instructions are received to the contrary.

The application is being forwarded to Technology Center 3700, GAU 3768 for further processing.

Telephone inquiries concerning this decision should be directed to the undersigned at (571) 272-3222.

Kenya A. McLaughlin
Petitions Attorney
Office of Petitions

Cc:
Rosa S. Kim
Siemens Corporation
Attn: Elsa Keller, Legal Administrator
170 Wood Avenue South
Iselin, NJ 08830

UNITED STATES PATENT AND TRADEMARK OFFICE

Commissioner for Patents
United States Patent and Trademark Office
P.O. Box 1450
Alexandria, VA 22313-1450
www.uspto.gov

SIEMENS CORPORATION
INTELLECTUAL PROPERTY DEPARTMENT
170 WOOD AVENUE SOUTH
ISELIN NJ 08830

COPY MAILED

AUG 1 1 2008

In re Application of	:	
William R. DRESCHEL et al.	:	
Application No. 10/368,774	:	ON PETITION
Filed: February 18, 2003	:	
Attorney Docket No. 98P82216US04	:	

This is a decision on the petition under the unintentional provisions of 37 CFR 1.137(b), filed February 4, 2008, to revive the above-identified application.

The petition is **DISMISSED**.

Any request for reconsideration of this decision must be submitted within TWO (2) MONTHS from the mail date of this decision. Extensions of time under 37 CFR 1.136(a) are permitted. The reconsideration request should include a cover letter entitled "Renewed Petition under 37 CFR 1.137(b)." This is not a final agency action within the meaning of 5 U.S.C. § 704.

The application became abandoned for failure to timely pay the required issue fee and publication fee on or before January 7, 2008, as required by the Notice of allowance and Fee(s) Due, mailed October 5, 2007, which set a statutory period for reply of three (3) months. Accordingly, the date of abandonment of this application is January 8, 2008.

A grantable petition under 37 CFR 1.137(b) must be accompanied by: (1) the required reply, unless previously filed; (2) the petition fee as set forth in 37 CFR 1.17(m); (3) a statement that the entire delay in filing the required reply from the due date for the reply until the filing of a grantable petition pursuant to 37 CFR 1.137(b) was unintentional; and (4) any terminal disclaimer (and fee as set forth in 37 CFR 1.20(d)) required by 37 CFR 1.137(c). Where there is a question as to whether either the abandonment or the delay in filing a petition under 37 CFR 1.137 was unintentional, the Commissioner may require additional information. See MPEP 711.03(c)(II)(C) and (D). The instant petition lacks item (1) above.

The application became abandoned for failure to timely pay the issue fee and publication fee. In an application or patent abandoned or lapsed for failure to pay the issue fee and publication fee, or any portion thereof, the required reply must be the payment of the issue fee and publication fee, or any outstanding balance thereof. See MPEP 711.03(c)(III)(A)(1). Therefore, the filling of a Request for Continued Examination without payment of the issue fee and publication fee is not a proper reply under 37 CFR 1.137(a)(1) or (b)(1). Also, there is no indication that petitioner has submitted a Part B-Fee(s) Transmittal form (PTOL-85). Accordingly, if petitioner desires to have the information normally found thereon printed on the patent, the Fee(s) Transmittal form provided with the Notice of Allowance and Fee(s) Due should be completed and returned with the payment of the fees.

Further correspondence with respect to this matter should be addressed as follows:

By Mail: Mail Stop PETITION
Commissioner for Patents
P. O. Box 1450
Alexandria, VA 22313-1450

By hand: U. S. Patent and Trademark Office
Customer Service Window, Mail Stop Petitions
Randolph Building
401 Dulany Street
Alexandria, VA 22314

The centralized facsimile number is **(571) 273-8300.**

Telephone inquiries concerning this decision should be directed to Phyllis Spivack at 571-272-6051 or in her absence, to the undersigned at (571) 272-7099.

Christopher Bottorff

for David Bucci
Petitions Examiner
Office of Petitions

UNITED STATES PATENT AND TRADEMARK OFFICE

Commissioner for Patents
United States Patent and Trademark Office
P.O. Box 1450
Alexandria, VA 22313-1450
www.uspto.gov

SIEMENS CORPORATION
INTELLECTUAL PROPERTY DEPARTMENT
170 WOOD AVENUE SOUTH
ISELIN, NJ 08830

COPY MAILED

OCT 08 2008

OFFICE OF PETITIONS

In re Application of	:	
DRESCHEL, et al.	:	DECISION GRANTING PETITIONS
Application No. 10/368,774	:	UNDER 37 CFR 1.137(b) AND
Filed: February 18, 2003	:	37 CFR 1.313(c)(2)
Attorney Docket No. 98P82216US04	:	

This is a decision on the renewed petition filed October 2, 2008, under 37 CFR 1.137(b), to revive the above-identified unintentionally abandoned application and on the petition under 37 CFR 1.313(c)(2) to withdraw the above-identified application from issue.

The petitions are GRANTED.

As to the petition under 37 CFR 1.137(b):

This application became abandoned for failure to timely pay the issue fee on or before January 7, 2008, as required by the Notice of Allowance and Fee(s) Due mailed October 5, 2007. Accordingly, the date of abandonment of this application is January 8, 2008.

The petition satisfies the conditions for revival pursuant to the provisions of 37 CFR 1.137(b) in that petitioner has supplied (1) the reply in the form of payment of the issue fee of $1510, (2) the petition fee of $1620, and (3) an adequate statement of unintentional delay.

As to the petition under 37 CFR 1.313(c)(2):

Petitioner requests withdrawal of this application from issue for consideration of a submission under 37 CFR 1.114.

The petition satisfies the requirements of 37 CFR 1.313(c)(2). Accordingly, this application is withdrawn from issue for consideration of a submission under 37 CFR 1.114 (RCE).

Petitioner is advised that the issue fee paid in this application cannot be refunded. If, however, this application is again allowed, petitioner may request that it be applied towards the issue fee required by the new Notice of Allowance.[1]

Telephone inquiries concerning this decision should be directed to the undersigned at (571) 272-7253.

This matter is being referred to Technology Center AU 3768 for processing of the RCE and for consideration of the Information Disclosure Statement submitted on October 2, 2008.

Monica A. Graves
Petitions Examiner
Office of Petitions

[1] *The request to apply the issue fee to the new Notice may be satisfied by completing and returning the new Part B – Fee(s) Transmittal Form (along with any balance due at the time of submission). Petitioner is advised that the Issue Fee Transmittal Form must be completed and timely submitted to avoid abandonment of the application.*

UNITED STATES PATENT AND TRADEMARK OFFICE

UNITED STATES DEPARTMENT OF COMMERCE
United States Patent and Trademark Office
Address: COMMISSIONER FOR PATENTS
P.O. Box 1450
Alexandria, Virginia 22313-1450
www.uspto.gov

Michael L. Goldman
NIXON PEABODY LLP
1100 Clinton Square
Rochester, NY 14604

Mail Date: 04/21/2010

Applicant	: Steven A. Goldman	: DECISION ON REQUEST FOR
Patent Number	: 7576065	: RECALCULATION of PATENT
Issue Date	: 08/18/2009	: TERM ADJUSTMENT IN VIEW
Appliction No	: 10/368,809	: OF WYETH AND NOTICE OF INTENT TO
Filed	: 02/14/2003	: ISSUE CERTIFICATE OF CORRECTION
		:

The Request for Recalculation is **GRANTED** to the extent indicated.

The patent term adjustment has been determined to be **315** days. The USPTO will *sua sponte* issue a certificate of correction reflecting the amount of PTA days determined by the recalculation.

Prior to the issuance of the certificate of correction, the USPTO will afford patentee an opportunity to be heard and request reconsideration. Accordingly, patentee has **one month or thirty (30) days**, whichever is longer, to file a request for reconsideration of this patent term adjustment calculation. See 35 U.S.C. 154(b)(3)(B)(ii) and 37 CFR 1.322(a)(4). No extensions of time will be granted under 37 CFR 1.136.

Patentee should use document code PET.OP if electronically filing a request for reconsideration of this patent term adjustment calculation. The patentee must also include the information required by 37 CFR 1.705(b)(2) and the fee required by 37 CFR 1.18(e). If patentee does not file a timely request for reconsideration of this patent term adjustment calculation including the information required by 37 CFR 1.705(b)(2) and the fee required by 37 CFR 1.18(e), the USPTO will issue a certificate of correction reflecting the PTA determination noted above.

Patentee should be aware that in order to preserve the right to review in the United States District Court for the District of Columbia of the USPTO patent term adjustment determination, patentee must ensure that he or she also take the steps required under 35 U.S.C. 154(b)(4)(A) in a timely manner. Nothing in the request for recalculation should be construed as providing an alternative time frame for commencing a civil action under 35 U.S.C. 154(b)(4)(A).

Any questions concerning this decision should be directed to the Office of Patent Legal Administration at 571-272-7702.

UNITED STATES PATENT AND TRADEMARK OFFICE

COMMISSIONER FOR PATENTS
UNITED STATES PATENT AND TRADEMARK OFFICE
P.O. BOX 1450
ALEXANDRIA, VA 22313-1450
www.uspto.gov

Paper No. 5

AKIN GUMP STRAUSS HAUER & FELD L.L.P.
ONE COMMERCE SQUARE
2005 MARKET STREET, SUITE 2200
PHILADELPHIA, PA 19103-7013

COPY MAILED

JAN 29 2004

OFFICE OF PETITIONS

In re Application of	:	
Pelissier, et al.	:	
Filed: February 19, 2003	:	ON PETITION
Application No. 10/368,822	:	
Attorney Docket No.: 10658-5US	:	

This is a decision on the petition under 37 CFR 1.182, filed January 14, 2004, to change the order of inventors in the above-identified application.

The current Office procedure for changing the order of inventors named in an application involves submitting a petition under 37 CFR 1.182 signed by either the attorney or agent of record or all of the applicants designating the desired changed.

The instant petition has met the criteria for changing the order of named inventors. Accordingly, the petition is **GRANTED**.

The order of inventors will be changed as follows:

1. Pelissier, L.
2. Fattah, E.
3. Dickie, K.

This application is being forwarded to the Office of Initial Patent Examination for correction of the file wrapper label and the PALM database regarding the order of inventorship thereafter the application will be forwarded to Technology Center 3700 for further processing.

Telephone inquiries pertaining to this decision should be directed to the undersigned at (703) 305-0310.

Alesia M. Brown
Senior Petitions Attorney
Office of Petitions

UNITED STATES PATENT AND TRADEMARK OFFICE

Commissioner for Patents
United States Patent and Trademark Office
P.O. Box 1450
Alexandria, VA 22313-1450
www.uspto.gov

HEWLETT-PACKARD COMPANY
INTELLECTUAL PROPERTY ADMISTRATION
P.O. BOX 272400
FORT COLLINS, CO 80527-2400

COPY MAILED

DEC 1 0 2004

OFFICE OF PETITIONS

In re Application of :
Frank et al. :
Application No. 10/368,837 :
Filed: February 18, 2003 :
Attorney Docket No. 200205298-1 :

ON PETITION

This is a decision on the petition filed October 12, 2004, requesting that the above-identified application be accorded a filing date of February 19, 2004, rather than the presently accorded date of February 18, 2004. The petition is properly treated as a petition under 37 CFR 1.10(d).

Applicant requests the earlier filing date on the basis that the application was purportedly deposited with the U. S. Postal Service (USPS) as Express Mail on February 19, 2004 pursuant to 37 CFR 1.10. In support, applicant has submitted a copy of Express Mail label No. EL927872876US showing a handwritten "date-in" of "February 18, 2004." The same Express Mail receipt number appears on the original "Patent Application Transmittal Letter," which includes the Express Mail label number. The Express Mail label number appears on the Certificate of Mailing by "Express Mail" and includes a statement of express mailing dated February 19, 2004 on the cover page for the application papers. Additionally, applicant has submitted copy of the Track & Confirm record showing that the package in question was accepted on February 19, 2003, at 5:49 p.m. in Kansas City, MO.

Therefore, in view of all the evidence, it is concluded that the application was deposited in Express Mail service on February 19, 2004. Accordingly, the instant application is entitled to a filing date of February 19, 2004, and has been so accorded.

The petition is **GRANTED**.

A petition under 37 CFR 1.10(d) does not require payment of a petition fee. Accordingly, the $130.00 submitted with the instant petition will be credited to petitioner's deposit account as authorized.

This application file is being forwarded to the Office of Initial Patent Examination Division for further **processing with a filing date of February 19, 2004, along with a corrected filing receipt.** Thereafter, the application file will be forwarded to Technology Center 2825 to await a response to the non-final office action mailed on October 7, 2004.

Telephone inquiries concerning this matter may be directed Paralegal Liana Chase at (571) 272-3282.

Charles Steven Brantley
Petitions Attorney
Office of Petitions

UNITED STATES PATENT AND TRADEMARK OFFICE

Commissioner for Patents
United States Patent and Trademark Office
P.O. Box 1450
Alexandria, VA 22313-1450
www.uspto.gov

HEWLETT-PACKARD COMPANY
Intellectual Property Administration
P.O. Box 272400
Fort Collins CO 80527-2400

COPY MAILED

JUL 0 5 2006

OFFICE OF PETITIONS

In re Application of :
Frank, et al. :
Application No. 10/368,837 :
Filed: February 19, 2003 :
Attorney Docket No. 200205298-1 :
For: SYSTEM AND METHOD FOR EVALUATING SIGNAL COUPLING BETWEEN DIFFERENTIAL TRACES IN A PACKAGE DESIGN

ON PETITION

This is a decision on the petition filed April 4, 2006 under 37 CFR 1.10(d), requesting that the above-identified application be accorded a filing date of February 19, 2003, rather than the presently accorded filing date of February 18, 2003.

The petition under 37 CFR 1.10(d) is **GRANTED**.

Petitioners request the later filing date on the basis that the application was deposited in Express Mail service on February 19, 2003, pursuant to the requirements of 37 CFR 1.10. The petition is accompanied by a printout of the United States Postal Service Track/Confirm for the package associated with Express Mail label EL927872876US that shows the package was accepted by the USPS on February 19, 2003. The same Express Mail label number is found on the original application transmittal letter. It is noted the "date-in" on the Express Mail label in question is "2 18 03".

Paragraph (d) of 37 CFR 1.10 states that:

> Any person filing correspondence under this section that was received by the Office and delivered by the "Express Mail Post Office to Addressee" service of the USPS, who can show that the "date-in" on the "Express Mail" mailing label or other official notation entered by the USPS was incorrectly entered or omitted by the USPS, may petition the Director to accord the correspondence a filing date as of the date the correspondence is shown to have been deposited with the USPS, provided that:
>
> (1) The petition is filed promptly after the person becomes aware that the Office has accorded, or will accord, a filing date based upon an incorrect entry by the USPS;

(2) The number of the "Express Mail" mailing label was placed on the paper(s) or fee(s) that constitute the correspondence prior to the original mailing by "Express Mail"; and

(3) The petition includes a showing, which establishes to the satisfaction of the Director, that the requested filing date was the date the correspondence was deposited in "Express Mail Post Office to Addressee" service prior to the last scheduled pickup for that day. Any showing pursuant to this paragraph must be corroborated by evidence from the USPS or that came into being after deposit and within one business day of the deposit of the correspondence in the "Express Mail Post Office to Addressee" service of the USPS.

A grantable petition under 37 CFR 1.10(d) must include "a showing which establishes, to the satisfaction of the Director, that the requested filing date was the date the correspondence was deposited in "Express Mail Post Office to Addressee" service prior to the last scheduled pick-up for that day." In addition, the showing "must be corroborated by evidence from the USPS or that came into being after deposit and within one business day of the deposit of the correspondence in the 'Express Mail Post Office to Addressee' service of the USPS."

The petition is accompanied by the corroborating evidence required by the rule. Accordingly, the petition is granted.

The application is being returned to the Office of Initial Patent Examination for correction of the filing date to **February 19, 2003** and the mailing of a corrected filing receipt.

Any inquiries related to this decision should be directed to the undersigned at (571) 272-3230.

Shirene Willis Brantley

Shirene Willis Brantley
Senior Petitions Attorney
Office of Petitions

UNITED STATES PATENT AND TRADEMARK OFFICE

Commissioner for Patents
United States Patent and Trademark Office
P.O. Box 1450
Alexandria, VA 22313-1450
www.uspto.gov

MOTOROLA, INC.
LAW DEPARTMENT
1303 EAST ALGONQUIN ROAD
3RD FLOOR
SCHAUMBURG IL 60196

COPY MAILED
FEB 06 2008
OFFICE OF PETITIONS

In re Application of	:	
Robert C. Booth	:	
Application No. 10/368,845	:	DECISION GRANTING PETITION
Filed: February 19, 2003	:	UNDER 37 CFR 1.137(b)
Attorney Docket No. D02879	:	

This is a decision on the petition under 37 CFR 1.137(b), filed July 23, 2007, to revive the above-identified application.

The petition is **GRANTED**.

The petition satisfies the conditions for revival pursuant to the provisions of 37 CFR 1.137(b) in that (1) the reply in the form of an amendment; (2) the petition fee; and (3) the required statement of unintentional delay have been received. Accordingly, the reply to the Nonfinal Rejection of October 19, 2006, is accepted as having been unintentionally delayed.

Telephone inquiries concerning this decision should be directed to the undersigned at (571) 272-3208.

This matter is being referred to Technology Center AU 3694 to consider the amendment submitted on July 23, 2007.

Karen Creasy

Karen Creasy
Petitions Examiner
Office of Petitions

UNITED STATES PATENT AND TRADEMARK OFFICE

Commissioner for Patents
United States Patent and Trademark Office
P.O. Box 1450
Alexandria, VA 22313-1450
www.uspto.gov

WOLF GREENFIELD & SACKS, PC
FEDERAL RESERVE PLAZA
600 ATLANTIC AVENUE
BOSTON MA 02210-2206

COPY MAILED

MAR 23 2007

OFFICE OF PETITIONS

In re Application of	:	
Nishikant Sonwalkar	:	
Application No. 10/368,848	:	DECISION GRANTING PETITION
Filed: February 19, 2003	:	UNDER 37 CFR 1.137(b)
Attorney Docket No. 100320.70001	:	

This is a decision on the petition under 37 CFR 1.137(b), filed November 16, 2006, to revive the above-identified application.

The petition is **GRANTED**.

The petition satisfies the conditions for revival pursuant to the provisions of 37 CFR 1.137(b) in that (1) the reply in the form of an RCE, amendment and affidavits; (2) the petition fee; and (3) the required statement of unintentional delay have been received. Accordingly, the reply to the Final Rejection of August 18, 2005, is accepted as having been unintentionally delayed.

Telephone inquiries concerning this decision should be directed to the undersigned at (571) 272-3208.

This matter is being referred to Technology Center AU 3714.

Karen Creasy

Karen Creasy
Petitions Examiner
Office of Petitions

UNITED STATES PATENT AND TRADEMARK OFFICE

COMMISSIONER FOR PATENTS
UNITED STATES PATENT AND TRADEMARK OFFICE
P.O. BOX 1450
ALEXANDRIA, VA 22313-1450
www.uspto.gov

Paper No. 4

FROMMER LAWRENCE & HAUG
745 FIFTH AVENUE - 10TH FL.
NEW YORK, NY 10151

COPY MAILED

OCT 2 8 2003

OFFICE OF PETITIONS

In re Application of	:	
Poulet, et al.	:	
Application No. 10/368,861	:	ON PETITION
Filed: February 18, 2003	:	
Attorney Docket No. 454313-3152.2	:	

This is a decision on the petition under 37 CFR 1.53, filed on May 12, 2003, requesting that the above-identified application be accorded a filing date of February 18, 2003, including the specification, declaration and drawings.

The application was filed on February 18, 2003 as a divisional of prior application number 09/616,781. The Utility Patent Application Transmittal states the prior application is incorporated by reference. However, on April 25, 2003, the Office of Initial Patent Examination (OIPE) mailed a "Notice of Incomplete Nonprovisional Application" that stated the application had not been accorded a filing date, and that the specification and declaration were missing, and that the application was deposited without drawings.

In response, on August 22, 2003, the instant petition and copies of the specification, declaration and drawings from prior application 09/616,781 were submitted. Petitioner contends the entire disclosure of prior application 09/616,781 was incorporated by reference.

Based on petitioner's representation that the specification, declaration and drawings supplied with the petition are part of the disclosure of prior application number 09/616,781 and that the entire disclosure of application number 09/616,781 was specifically incorporated by reference in the present application on February 18, 2003, it appears that the specification, drawings and declaration were present in the Office on February 18, 2003,

albeit in the file of another application, i.e., application no. 09/616,781. Therefore, on petition, the application may be accorded the requested filing date.

The petition is granted.

However, the petition fee will not be refunded, since the petition was required to accord the application the requested filing date.

Please note, the $130.00 surcharge set forth in 37 CFR 1.16(e) is required, since the application was filed on February 18, 2003, without an oath or declaration in compliance with 37 CFR 1.63. The $130.00 surcharge will be charged to deposit account no. 50-0320, as authorized in the instant petition filed May 12, 2003.

This application will be returned to OIPE for further processing with a filing date of February 18, 2003, using the specification, declaration and drawings, supplied on May 12, 2003.

Telephone inquiries concerning this matter may be directed to the undersigned at (703) 306-9200.

Edward J. Tannouse
Petitions Attorney
Office of Petitions
United States Patent and Trademark Office

UNITED STATES PATENT AND TRADEMARK OFFICE

Commissioner for Patents
United States Patent and Trademark Office
P. O. Box 1450
Alexandria, VA 22313-1450
www. uspto. gov

BAKER BOTTS L.L.P.
2001 ROSS AVENUE
SUITE 600
DALLAS, TX 75201-2980

COPY MAILED

MAR 2 4 2005

OFFICE OF PETITIONS

ON PETITION

In re Application of	:	
Michael W. Powers et al	:	
Application No. 10/368,898	:	
Filed: February 17, 2003	:	
Attorney Docket No. 074026.0104	:	

This is a decision on the petition under 37 CFR 1.313(c)(2), filed October 18, 2004, to withdraw the above-identified application from issue after payment of the issue fee. See 1233 *Official Gazette* 54 (April 11, 2000).

The petition is **DISMISSED as moot.**

Unfortunately, the petition did not reach the appropriate official for a decision until after the above-identified application issued as U.S. Patent No. 6,859,172. Any inconvenience caused petitioners is regretted.

The Request for Continued Examination (RCE) deposited on March 21, 2005, is considered an improper submission under 37 CFR 1.114 and will not be further processed. The RCE filing fee will not be charge to counsel's deposit account.

The information disclosure statement (IDS) has been placed in the file of the above-identified application without further consideration. See 37 CFR 1.97(i).

Telephone inquiries should be directed to Irvin Dingle at (571) 272-3210.

Irvin Dingle
Petitions Examiner
Office of Petitions
Office of the Deputy Commissioner
for Patent Examination Policy

UNITED STATES PATENT AND TRADEMARK OFFICE

COMMISSIONER FOR PATENTS
UNITED STATES PATENT AND TRADEMARK OFFICE
P.O. BOX 1450
ALEXANDRIA, VA 22313-1450
www.uspto.gov

Paper No. 6

BELLSOUTH CORPORATION
P.O. BOX 2903
MINNEAPOLIS MN 55402-0903

COPY MAILED
APR 29 2004
OFFICE OF PETITIONS

In re Application of :
Silver, et al. :
Application No. 10/368,903 : ON PETITION
Filed: February 18, 2003 :
Dkt. No.: 60027.0302US01/BS02357 :

This decision is in response to the petition under 37 C.F.R. § 1.137(b) filed April 22, 2004.

The petition is GRANTED.

This application became abandoned June 3, 2003 for failure to timely reply to the Notice to File Missing Parts of Nonprovisional Application mailed April 2, 2003. The Notice set a two month shortened statutory period of time for reply. No petition for an extension so time in accordance with 37 C.F.R. § 1.136 was timely submitted. Notice of Abandonment was mailed January 30, 2004.

A grantable petition pursuant to 37 C.F.R. § 1.137(b) must be accompanied by: (1) the required reply to the outstanding Office action or notice, unless previously filed; (2) the petition fee as set forth in 37 C.F.R. § 1.17(m); (3) a statement that the entire delay in filing the required reply from the due date for the reply until the filing of a grantable petition pursuant to 37 C.F.R. § 1.137(b) was unintentional; and (4)any terminal disclaimer (and fee set forth in 37 C.F.R. § 1.20(d)) required pursuant to 37 C.F.R. § 1.137(c).

The instant petition has been reviewed and found in compliance with the provisions of 37 CFR 1.137(b). Accordingly, the failure to timely reply to the Notice is accepted as having been unintentionally delayed.

This application will be forwarded to the Office of Initial Patent Examination for further processing.

Telephone inquiries regarding this decision should be directed to the undersigned at (703) 305-0310.

Alesia M. Brown
Senior Petitions Attorney
Office of Petitions

UNITED STATES PATENT AND TRADEMARK OFFICE

COMMISSIONER FOR PATENTS
UNITED STATES PATENT AND TRADEMARK OFFICE
P.O. BOX 1450
ALEXANDRIA, VA 22313-1450
www.uspto.gov

QUALCOMM INCORPORATED
5775 MOREHOUSE DR.
SAN DIEGO, CA 92121

COPY MAILED

AUG 10 2007

OFFICE OF PETITIONS

In re Application of
WEI et al
Application No.: 10/368,920
Filing Date: February 18, 2003
Attorney Docket No.: 030037

DECISION ON PETITION
UNDER 37 CFR 1.137(B)

This is a decision on the petition under 37 CFR 1.137(b), filed May 1, 2007, to revive the above-identified application.

The petition is **GRANTED.**

The above-identified application became abandoned for failure to submit the issue fee and publication fee in a timely manner in reply to the Notice of Allowance mailed December 29, 2006, which set a statutory period for reply of three (3) months. Accordingly, by operation of law, the above-identified application became abandoned on March 30, 2007.

The petition satisfies the conditions for revival pursuant to the provisions of 37 CFR 1.137(b) in that (1) the reply in the form of payment of the issue fee and publication fee; (2) the petition fee; and (3) the required statement of unintentional delay have been received. Accordingly, the payment of the issue fee and publication fee is accepted as having been unintentionally delayed.

With further regard to the statement in the petition that "[t]he delay in payment of the issue fee was unintentional", this statement is interpreted as a statement that the entire delay in filing the required reply from the due date for the reply until the filing of a grantable petition under 37 CFR 1.137(b) was unintentional. If this is an incorrect interpretation in view of the rules, petitioner is required to provide a statement to that effect.

This application is being referred to the Office of Publications.

Telephone inquiries concerning this decision should be directed to the undersigned at (571) 272-3303.

BryanLin

Bryan Lin
Legal Examiner
Office of the Deputy Commissioner
for Patent Examination Policy

UNITED STATES PATENT AND TRADEMARK OFFICE

COMMISSIONER FOR PATENTS
UNITED STATES PATENT AND TRADEMARK OFFICE
P.O. BOX 1450
ALEXANDRIA, VA 22313-1450
www.uspto.gov

Paper No. 7

THE PROCTER & GAMBLE COMPANY
INTELLECTUAL PROPERTY DIVISION
WINTON HILL TECHNICAL CENTER - BOX 161
6110 CENTER HILL AVENUE
CINCINNATI, OH 45224

COPY MAILED

MAR 2 2 2004

OFFICE OF PETITIONS

In re Application of
Chappell, et al.
Application No.: 10/368,932
Filed: February 19, 2003
Attorney Docket No: 8873

ON PETITION

This is in response to the petition under 37 CFR 1.137(b) filed February 10, 2004.

The petition under 37 CFR 1.137(b) is **granted**.

On April 9, 2003, a "Notice to File Missing Parts of Nonprovisional Application" (the "Notice") was mailed by the Office allowing a two-month period for reply. Extension of time were available pursuant to 37 CFR 1.136(a). The Notice required the filing of an executed oath or declaration and $130.00 surcharge. A proper response was not received within the allowable period, and the application became abandoned on June 10, 2003. A Notice of Abandonment was mailed on February 2, 2004.

The declaration filed February 10, 2004, is noted and made of record.

Deposit account 16-2480 will be charged $130.00 for the surcharge for the late filing of a proper declaration.

This application is being forwarded to the Office of Initial Patent Examination for further processing.

Telephone inquiries regarding this decision should be directed to the undersigned at (703) 305-0010.

Kenya A. McLaughlin

Kenya A. McLaughlin
Petitions Attorney
Office of Petitions

UNITED STATES PATENT AND TRADEMARK OFFICE

Commissioner for Patents
United States Patent and Trademark Office
P.O. Box 1450
Alexandria, VA 22313-1450
www.uspto.gov

CHRISTENSEN, O'CONNOR, JOHNSON, KINDNESS, PLLC
1420 FIFTH AVENUE
SUITE 2800
SEATTLE WA 98101-2347

COPY MAILED

MAY 09 2007

OFFICE OF PETITIONS

In re Application of	:	
Garwood, Anthony J.M.	:	
Application No. 10/368,933	:	ON PETITION
Filed: February 14, 2003	:	
Attorney Docket No. CRSL120265	:	

This is a decision on the petition under 37 C.F.R. § 1.137(b), filed March 5, 2007, to revive the above-identified application.

The petition is **GRANTED.**

The petition satisfies the conditions for revival pursuant to the provisions of 37 CFR 1.137(b) in that (1) the reply in the form of an Appeal Brief; (2) the petition fee; and (3) the required statement of unintentional delay have been received. Accordingly, the response has been accepted as having been unintentionally delayed.

This matter is being referred to Technology Center 1700 for further processing.

Telephone inquiries regarding this decision should be directed to the undersigned at (571) 272-3206.

Liana Walsh
Petitions Examiner
Office of Petitions

UNITED STATES PATENT AND TRADEMARK OFFICE

JAN - 4 2005

Commissioner for Patents
United States Patent and Trademark Office
P.O. Box 1450
Alexandria, VA 22313-1450
www.uspto.gov

Shannon E. McGarrah
Amin Law, LLC
217 N. Jefferson St.
Ste. 500
Chicago IL 60661

In re Application of:
Oslick et al.
Serial No.: 10/368,942
Filed: February 18, 2003
Attorney Docket No.: BET1940P0010US

DECISION ON PETITION TO WITHDRAW THE HOLDING OF ABANDONMENT

This is in response to applicants' petition under 37 CFR § 1.181 filed on November 22, 2004, requesting withdrawal of the holding of abandonment based on non-receipt of an Office action and to restore the application to a pending status.

A review of the file history shows that the Office mailed a Notice of Allowability and a Notice of Allowance and Issue Fee Due, setting a three-month statutory period for reply to applicants on June 1, 2004. On October 27, 2004, a Notice of Abandonment was mailed indicating that the issue fee had not been paid.

Applicant states that the Office action of June 1, 2004 was never received and provides as evidence thereof Affidavits attesting to this fact. Based on the evidence presented, it is concluded that applicant never received the Office action. In view thereof, the Notice of Abandonment mailed October 27, 2004, is vacated and the application is restored to pending status with the mailing date of this decision.

Applicants' petition is **GRANTED**. The application will be forwarded to the examiner for prompt mailing of a new Notice of Allowance and Issue Fee Due and the Notice of Allowability.

Should there be any questions about this decision, please contact Marianne C. Seidel by letter addressed to Director, TC 1600, at the address listed above, or by telephone at 571-272-0584 or by facsimile at 703-872-9306.

Marianne C. Seidel

Bruce Kisliuk
Director, Technology Center 1600

UNITED STATES PATENT AND TRADEMARK OFFICE

UNITED STATES DEPARTMENT OF COMMERCE
United States Patent and Trademark Office
Address: COMMISSIONER FOR PATENTS
P.O. Box 1450
Alexandria, Virginia 22313-1450
www.uspto.gov

APPLICATION NO.	FILING DATE	FIRST NAMED INVENTOR	ATTORNEY DOCKET NO.	CONFIRMATION NO.
10/368,951	02/18/2003	Frederick H. Miller	3304.2.2	4210

28049 7590 05/06/2005

PATE PIERCE & BAIRD
215 SOUTH STATE STREET, SUITE 550
PARKSIDE TOWER
SALT LAKE CITY, UT 84111

EXAMINER
TRAN, SUSAN T

ART UNIT	PAPER NUMBER
1615	

DATE MAILED: 05/06/2005

Please find below and/or attached an Office communication concerning this application or proceeding.

The request for deferral/suspension of action under 37 CFR 1.103 has been approved.

UNITED STATES PATENT AND TRADEMARK OFFICE

Commissioner for Patents
United States Patent and Trademark Office
P.O. Box 1450
Alexandria, VA 22313-1450
www.uspto.gov

MAY - 6 2005

STEPHEN A. BENT
FOLEY & LARDNER, LLP
3000 K STREET, NW
SUITE 500
WASHINGTON, DC 20007-5101

In re Application of	:
Fred H. MIller	:
Serial No.: 10/368,951	: DEFERRAL OF EXAMINIATION
Filed: February 18, 2003	:
Attorney Docket No.: 027668-0101	:

This is in reply to the petition under 37 CFR 1.103(d) to defer action on this application at applicant's request, filed March 24, 2005.

A review of the file history shows that this is an as yet unexamined patent application. Applicants request that action on this application be suspended in accordance with 37 CFR 1.103(d).

§ 1.103 Suspension of action by the Office.

(d) *Deferral of examination.* On request of the applicant, the Office may grant a deferral of examination under the conditions specified in this paragraph for a period not extending beyond three years from the earliest filing date for which a benefit is claimed under title 35, United States Code. A request for deferral of examination under this paragraph must include the publication fee set forth in § 1.18(d) and the processing fee set forth in § 1.17(i). A request for deferral of examination under this paragraph will not be granted unless:
(1) The application is an original utility or plant application filed under § 1.53(b) or resulting from entry of an international application into the national stage after compliance with § 1.495;
(2) The applicant has not filed a nonpublication request under § 1.213(a), or has filed a request under § 1.213(b) to rescind a previously filed nonpublication request;
(3) The application is in condition for publication as provided in § 1.211(c); and
(4) The Office has not issued either an Office action under 35 U.S.C. 132 or a notice of allowance under 35 U.S.C. 151.

Applicants meet all the criteria set forth above.

The petition is **GRANTED**. Action on this application is deferred until February 18, 2006, unless applicant requests earlier examination.

Should there be any questions with respect to this action, please contact the examiner or William R. Dixon, Jr., by mail addressed to: Director, Technology Center 1600, P. O. BOX 1450, ALEXANDRIA, VA 22313-1450, or by telephone at 571-272-0519 or by facsimile transmission at Office general facsimile number, 571-273-8300.

Bruce M. Kisliuk
Director, Technology Center 1600

SPE RESPONSE FOR CERTIFICATE OF CORRECTION

Paper No.: _____

DATE : August 20, 2007

TO SPE OF : ART UNIT 2826

SUBJECT : Request for Certificate of Correction for Appl. No./10/368964 patent no.6770906

Please respond to this request for a certificate of correction within 7 days.

Please review the requested changes/corrections as shown in the **COCIN** document(s) in the IFW application image. No new matter should be introduced, nor should the scope or meaning of the claims be changed.

Please complete the response (see below) and forward the completed response to scanning using document code **COCX**.

Magdalene Talley

Certificates of Correction Branch

703-308-9390 ext. 116

Thank You For Your Assistance

The request for issuing the above-identified correction(s) is hereby:

Note your decision on the appropriate box.

- [X] **Approved** — **All** changes apply.
- [ ] **Approved in Part** — Specify below which changes **do not** apply.
- [ ] **Denied** — State the reasons for denial below.

Comments: _____

SUE PURVIS — **SPE**

2826 — **Art Unit**

UNITED STATES PATENT AND TRADEMARK OFFICE

Commissioner for Patents
United States Patent and Trademark Office
P.O. Box 1450
Alexandria, VA 22313-1450
www.uspto.gov

COPY MAILED

JUN 29 2007

OFFICE OF PETITIONS

MORRISON & FOERSTER LLP
1650 TYSON BOULEVARD
SUITE 400
MCLEAN, VA 22102

In re Application of	:	
Selena CHAN, et al	:	
Application No. 10/368,976	:	DECISION ON PETITION
Filed: February 18, 2003	:	TO WITHDRAW
Attorney Docket No. 070702010300	:	FROM RECORD
	:	

This is a decision on the Request to Withdraw as attorney or agent of record under 37 C.F.R. § 1.36(b), filed April 6, 2007.

The request is **APPROVED**.

A grantable request to withdraw as attorney/agent of record must be signed by every attorney/agent seeking to withdraw or contain a clear indication that one attorney is signing on behalf of another/others. A request to withdraw will not be approved unless at least 30 (thirty) days would remain between the date of approval and the later of the expiration date of a time to file a response or the expiration date of the maximum time period which can be extended under 37 C.F.R. § 1.136(a).

The request was signed by Peter J. Davis on behalf of all attorneys of record who associated with customer No. 25227.

All attorneys/agents associated with Customer Number 25227 have been withdrawn.

Applicant is reminded that there is no attorney of record at this time.

The request to change the correspondence of record is not acceptable as the requested correspondence address is not that of: (1) the first named signing inventor; or (2) an intervening assignee of the entire interest under 37 C.F.R 3.71. All future communications from the Office will be directed to the assignee of the entire interest at the first copied address below until otherwise properly notified by the applicant.

There is an outstanding Office action mailed May 14, 2007 that requires a reply by the applicant.

Telephone inquiries concerning this decision should be directed to Diane Goodwyn at 571-272-6735.

April Wise
Petitions Examiner
Office of Petitions

cc: INTEL CORPORATION
2200 MISSION COLLEGE BLVD.
SANTA CLARA, CA 95052

cc: RAJ S. DAVE, PH.D.
DARBY & DARBY P.C.
1500 K STREET, N.W.
SUITE 250
WASHINGTON, D.C. 20005-1714

UNITED STATES PATENT AND TRADEMARK OFFICE

UNITED STATES DEPARTMENT OF COMMERCE
United States Patent and Trademark Office
Address: COMMISSIONER FOR PATENTS
P.O. Box 1450
Alexandria, Virginia 22313-1450
www.uspto.gov

APPLICATION NUMBER	FILING OR 371 (c) DATE	FIRST NAMED APPLICANT	ATTY. DOCKET NO./TITLE
10/368,976	02/18/2003	Selena Chan	070702010300

CONFIRMATION NO. 4755

OC000000024084372

25227
MORRISON & FOERSTER LLP
1650 TYSONS BOULEVARD
SUITE 400
MCLEAN, VA 22102

Date Mailed: 05/29/2007

NOTICE REGARDING CHANGE OF POWER OF ATTORNEY

This is in response to the Power of Attorney filed 04/06/2007.

- The withdrawal as attorney in this application has been accepted. Future correspondence will be mailed to the new address of record. 37 CFR 1.33.

Office of Initial Patent Examination (571) 272-4000, or 1-800-PTO-9199
FORMER ATTORNEY/AGENT COPY

UNITED STATES PATENT AND TRADEMARK OFFICE

Commissioner for Patents
United States Patent and Trademark Office
P.O. Box 1450
Alexandria, VA 22313-1450
www.uspto.gov

PAUL S MADAN
MADAN, MOSSMAN & SRIRAM, PC
2603 AUGUSTA, SUITE 700
HOUSTON TX 77057-1130

COPY MAILED
DEC 19 2006
OFFICE OF PETITIONS

In re Application of	:	
John Hendrik	:	
Application No. 10/369,007	:	DECISION ON PETITION
Filed: February 19, 2003	:	
Attorney Docket No. 564-29135-US	:	

This is a decision on the petition under 37 CFR §1.137(b), filed October 27, 2006.

This above-identified application became abandoned for failure to timely file a proper response to a final Office Action which was mailed on June 14, 2005. The final Office Action set a three (3) month shortened statutory period for reply. An amendment and three month extension of time were submitted on December 14, 2005. In response to the amendment an Advisory Action was mailed on January 20, 2006 indicating the amendment submitted on December 14, 2005 did not place the application in condition for allowance. No additional extensions of time were obtained under the provisions of 37 CFR §1.136(a). Accordingly, this application became abandoned on December 15, 2005. A Notice of Abandonment was mailed June 2, 2006.

The requirements for a grantable petition under 37 CFR §1.137(b) have been met. This petition is hereby **Granted**.

The application will be forwarded to Technology Center 3700 for further processing.

Telephone inquiries concerning this matter should be directed to the undersigned at (571) 272-3215.

Charlema R. Grant

Charlema R. Grant
Petitions Attorney
Office of Petitions

UNITED STATES PATENT AND TRADEMARK OFFICE

COMMISSIONER FOR PATENTS
UNITED STATES PATENT AND TRADEMARK OFFICE
P.O. BOX 1450
ALEXANDRIA, VA 22313-1450
WWW.USPTO.GOV

Paper No. 7

Christopher L. Holt
WESTMAN CHAMPLIN & KELLY
Suite 1600 - International Centre
900 South Second Avenue
Minneapolis, MN 55402-3319

COPY MAILED

JUL 16 2003

OFFICE OF PETITIONS

In re Application of Gerberding et al. Application No. 10/369,015 Filed: February 19, 2003 Attorney Docket No. S13.12-0131 Title: METHODS AND DEVICES FOR THE TREATMENT OF ANEURYSMS	DECISION REFUSING STATUS UNDER 37 C.F.R. § 1.47(a)

This is a decision on the "Petition to Make Application for Patent on Behalf of Joint Inventors Who Refuse to Sign (37 CFR 1.47(B)," filed June 25, 2003. This petition is properly treated under § 1.47(a)[1].

The petition is **DISMISSED**.

Rule 47 applicants are given **TWO MONTHS** from the mailing date of this decision to reply, correcting the below-noted deficiencies. Any reply should be entitled "Request for Reconsideration of Petition Under 37 C.F.R. § 1.47(a)," and should only address the deficiencies noted below, except that the reply may include an oath or declaration executed by the non-signing inventor. **Failure to respond will result in abandonment of the application.** Any extensions of time will be governed by 37 C.F.R. § 1.136(a).

The above-identified application was filed on February 19, 2003, with an unexecuted declaration. Brent Gerberding, Stephen Griffin, Yem Chin, Jennifer McCrory, Anthony Tremaglio, Jr., Lee Guterman, and Alyssa Dassa were named as joint inventors. Accordingly, on March 26, 2003, applicants were mailed a "Notice to File Missing Parts of Nonprovisional Application - Filing Date Granted (Notice)," requiring an executed oath or declaration and a surcharge for its late filing. In addition, the Notice required applicants to submit replacement drawings in compliance

[1] Filing under 37 CFR 1.47(b) and 35 U.S.C. 118 is permitted only when no inventor is available to make application. Where at least one joint inventor is available, filing is appropriate under 37 CFR 1.47(a). 37 CFR 1.47(a) and 35 U.S.C. 116, second paragraph, requires all available joint inventors to file an application "on behalf of" themselves and on behalf of a joint inventor who "cannot be found or reached after diligent effort" or who refuses to "join in an application." See MPEP 409.03(a) and (b).

with 37 CFR 1.84 and 37 CFR 1.121. This Notice set a two-month period for reply with extensions of time obtainable under § 1.136(a).

In response to the Notice, applicants filed four (4) declarations executed, in combination, by joint inventors Gerberding, Griffin, Chin, and Dassa on behalf of themselves and on behalf of non-signing inventors McCrory, Tremaglio, Jr., and Guterman; the surcharge under § 1.16(e); and the instant petition under §1.47(a)[2]. This response was made timely by an accompanying petition for extension of time within the first month. Applicants assert that status under § 1.47(a) is proper because inventors McCrory and Tremaglio can not be found or reached to join in the application and inventor Guterman refuses to join in the application. In support thereof, applicants submitted a declaration of facts of patent legal secretary Brenda House.

A grantable petition under 37 C.F.R. § 1.47(a) requires: (1) proof that the non-signing inventor cannot be reached or found, after diligent effort, or refuses to sign the oath or declaration after having been presented with the application papers (specification, claims and drawings); (2) an acceptable oath or declaration in compliance with 35 U.S.C. §§115 and 116; (3) the petition fee; and (4) a statement of the last known address of the non-signing inventor. As to inventors McCrory and Tremaglio[3], the instant petition does not satisfy requirement (1).

In her statement, patent legal secretary House detailed attempting to contact inventors McCrory and Tremaglio by sending the application papers via FedEx delivery to a last known address for each inventor. These attempts were not successful as the packages were returned undeliverable by FedEx with no forwarding address provided. The attempts shown to locate inventors McCrory and Tremaglio are not sufficient to show diligent effort. There is no indication that Rule 47 applicants attempted to determine the inventors' forwarding addresses from the postal service or through public records, and to send the application papers to those addresses for consideration by the inventors. See MPEP 409.03(d).

If further attempts to obtain a forwarding address or to locate the non-signing inventors by other means such as through E-mail, telephone, or the Internet continue to fail, then applicants will have provided the necessary proof required under 37 C.F.R. § 1.47 that the inventor cannot be reached. Details of the efforts to locate the non-signing inventors should be set forth in an affidavit or declaration of facts by a person with first hand knowledge of the details. Applicants should submit documentary

---

[2] Receipt is acknowledged of the replacement drawings filed June 25, 2003. After applicants have met the requirements under § 1.47(a), the drawings will be forwarded to the Office of Initial Patent Examination (OIPE) to determine whether they constitute a proper reply.

[3] The petition does include adequate proof of inventor Guterman having refused to join in the application after having been presented with the application papers.

evidence such as the results of any E-mail or Internet searches.

Of course, if the inventors are located, then a showing of presentation to them of the entire application package, including specification, claims and drawings, and their subsequent refusal is required for status under § 1.47(a).

Further correspondence with respect to this matter should be addressed as follows:

By mail: Mail Stop Petition
Commissioner for Patents
P.O. Box 1450
Alexandria, VA 22313-1450
ATTN: Nancy Johnson

By FAX: (703)308-6916
Attn: Office of Petitions

By hand: Office of Petitions
2201 South Clark Place
Crystal Plaza 4, Suite 3C23
Arlington, VA
ATTN: Nancy Johnson

Telephone inquiries related to this decision should be directed to the undersigned at (703) 305-0309.

Nancy Johnson
Petitions Attorney
Office of Petitions

UNITED STATES PATENT AND TRADEMARK OFFICE

COMMISSIONER FOR PATENTS
UNITED STATES PATENT AND TRADEMARK OFFICE
P.O. BOX 1450
ALEXANDRIA, VA 22313-1450
www.uspto.gov

Paper No. 12

Christopher L. Holt
WESTMAN CHAMPLIN & KELLY
Suite 1600 - International Centre
900 South Second Avenue
Minneapolis, MN 55402-3319

COPY MAILED

NOV 0 6 2003

OFFICE OF PETITIONS

In re Application of
Gerberding et al.
Application No. 10/369,015
Filed: February 19, 2003
Attorney Docket No. S13.12-0131
Title: METHODS AND DEVICES FOR THE TREATMENT OF ANEURYSMS

LETTER

This is in response to the "REQUEST FOR RECONSIDERATION OF PETITION UNDER 37 C.F.R. § 1.47(a)," filed October 16, 2003.

A decision on the petition is being held in abeyance pending the submission of a petition under § 1.182 to correct inventor name or other appropriate action.

A **TWO (2) MONTH** period from the mailing date of this letter is set for reply. Extensions of time under § 1.136(a) are not permitted. Failure to timely respond may result in a decision being rendered without consideration of such a petition under § 1.182 or other appropriate action.

The above-identified application was filed on February 19, 2003, with an unexecuted declaration. Brent Gerberding, Stephen Griffin, Yem Chin, Jennifer McCrory, Anthony Tremaglio, Jr., Lee Guterman, and Alyssa Dassa were named as joint inventors. Accordingly, on March 26, 2003, applicants were mailed a "Notice to File Missing Parts of Nonprovisional Application - Filing Date Granted (Notice)," requiring an executed oath or declaration and a surcharge for its late filing.

By decision mailed July 16, 2003, the initial petition under § 1.47(a), filed June 25, 2003, was dismissed for failure to provide adequate proof of the unavailability of inventors McCrory and Tremaglio (It was concluded that the evidence was sufficient to show that inventor Guterman had by his conduct refused to join in the application).

The instant renewed petition was made timely by an accompanying petition for a one-month extension of time. Accompanying the petition were declarations executed by previously non-signing inventors McCrory (now Jandak) and Tremaglio.

The declarations executed by all of the joint inventors, except inventor McCrory, identify her as inventor Jennifer McCrory. The declaration signed by inventor McCrory identifies her as inventor Jennifer Jandak. It has been determined that acceptance of such declarations with different given names for inventor McCrory requires the filing of a petition under § 1.182, as provided for in MPEP 605.04(c).

MPEP 605.04(c) provides that:

> In cases where an inventor's name has been changed after the application has been filed and the inventor desires to change his or her name on the application, he or she must submit a petition under 37 CFR 1.182. The petition should be directed to the attention of the Office of Petitions. The petition must include an appropriate petition fee and an affidavit signed with both names and setting forth the procedure whereby the change of name was effected, or a certified copy of the court order.

Further correspondence with respect to this matter should be addressed as follows:

By mail: Mail Stop Petition
Commissioner for Patents
P.O. Box 1450
Alexandria, VA 22313-1450

By facsimile: (703) 308-6916
Attn: Office of Petitions

By hand: Office of Petitions
2201 South Clark Place
Crystal Plaza 4, Suite 3C23
Arlington, VA 22202

Telephone inquiries concerning this communication should be directed to the undersigned at (703) 305-0309.

Nancy Johnson
Senior Petitions Attorney
Office of Petitions

UNITED STATES PATENT AND TRADEMARK OFFICE

COMMISSIONER FOR PATENTS
UNITED STATES PATENT AND TRADEMARK OFFICE
P.O. BOX 1450
ALEXANDRIA, VA 22313-1450
www.uspto.gov

Paper No. 14

Christopher L. Holt
WESTMAN CHAMPLIN & KELLY
Suite 1600 - International Centre
900 South Second Avenue
Minneapolis, MN 55402-3319

COPY MAILED

JAN 1 3 2004

OFFICE OF PETITIONS

In re Application of :
Gerberding et al. :
Application No. 10/369,015 :
Filed: February 19, 2003 :
Attorney Docket No. S13.12-0131 :
Title: METHODS AND DEVICES FOR THE :
TREATMENT OF ANEURYSMS :

DECISION ON PETITION

This is a decision on the "PETITION UNDER 37 CFR 1.182" filed January 6, 2004, to correct the name of an inventor.

The above-identified application was filed on February 19, 2003, with an unexecuted declaration. Brent Gerberding, Stephen Griffin, Yem Chin, Jennifer McCrory, Anthony Tremaglio, Jr., Lee Guterman, and Alyssa Dassa were named as joint inventors. Applicants have filed a petition under § 1.47, including a declaration signed by inventor McCrory using the name "Jennifer Jandak. In a decision mailed November 6, 2003, applicants were advised that a petition under 1.182 was necessary to accept the declaration with inventor McCrory identified as Jennifer Jandak.

Petitioner has supplied a statement by the inventor that her name has been legally changed from Jennifer McCrory to Jennifer Jandak following divorce. Moreover, petitioner has submitted the petition fee for the change.

However, MPEP §605.04(c) provides that:

> In cases where an inventor's name has been changed after the application has been filed and the inventor desires to change his or her name on the application, he or she must submit a petition under 37 CFR 1.182. ... The petition must include an appropriate petition fee and an affidavit signed with both names and setting forth the procedure whereby the change of name was effected, or a certified copy of the court order.

Petitioner has not satisfied the requirements for changing the name of the inventor on the application. The petition does not include a proper affidavit. The statement of inventor McCrory is not sworn to by the declarant before an officer authorized to administer oaths. Alternatively, petitioner has not provided a certified copy of any court order effectuating the change of name.

Accordingly, the petition is **DISMISSED** without prejudice to reconsideration upon the filing of a proper affidavit. Any request for reconsideration not filed **WITHIN TWO MONTHS** of the mailing date of this decision may be dismissed as untimely. This two-month period is not extendable. See 37 CFR 1.181(f).

A decision on the petition under § 1.47 continues to be held in abeyance pending the submission of a **grantable** petition under § 1.182 to correct inventor name or other appropriate action.

Further correspondence with respect to this matter should be addressed as follows:

By mail: Mail Stop Petition
Commissioner for Patents
P.O. Box 1450
Alexandria, VA 22313-1450

By FAX: (703) 872-9306
ATTN: NANCY JOHNSON
SENIOR PETITIONS ATTORNEY

By hand: CUSTOMER SERVICE WINDOW
2011 South Clark Place
Crystal Plaza Two Lobby
Arlington, VA 22202

Telephone inquiries related to this decision may be directed to the undersigned at (703) 305-0309.

Nancy Johnson
Senior Petitions Attorney
Office of Petitions

UNITED STATES PATENT AND TRADEMARK OFFICE

COMMISSIONER FOR PATENTS
UNITED STATES PATENT AND TRADEMARK OFFICE
P.O. BOX 1450
ALEXANDRIA, VA 22313-1450
www.uspto.gov

Paper No. 16

Christopher L. Holt
WESTMAN CHAMPLIN & KELLY
Suite 1600 - International Centre
900 South Second Avenue
Minneapolis, MN 55402-3319

COPY MAILED

FEB 2 0 2004

OFFICE OF PETITIONS

In re Application of Gerberding et al. Application No. 10/369,015 Filed: February 19, 2003 Attorney Docket No. S13.12-0131 Title: METHODS AND DEVICES FOR THE TREATMENT OF ANEURYSMS	DECISION ON PETITION UNDER 37 CFR 1.182 and DECISION ACCORDING STATUS UNDER 37 CFR 1.47(a)

This is a decision on the "PETITION UNDER 37 CFR 1.182" filed February 12, 2004, to correct the name of an inventor. This decision also responds to the "PETITION TO MAKE APPLICATION FOR PATENT ON BEHALF OF JOINT INVENTORS WHO REFUSE TO SIGN (37 C.F.R. § 1.47(B))," filed June 25, 2003.

The petition under § 1.182 is **GRANTED**.

The petition under § 1.47(a) is **GRANTED**.

The above-identified application was filed on February 19, 2003, with an unexecuted declaration. Brent Gerberding, Stephen Griffin, Yem Chin, Jennifer McCrory, Anthony Tremaglio, Jr., Lee Guterman, and Alyssa Dassa were named as joint inventors. Applicants filed the petition under § 1.47, including a declaration signed by inventor McCrory using the name "Jennifer Jandak. In a decision mailed November 6, 2003, applicants were advised that a petition under 1.182 was necessary to accept the declarations with inventor McCrory identified as Jennifer Jandak.

DECISION ON PETITION UNDER § 1.182

On petition under § 1.182, filed January 6, 2004, petitioner supplied a statement by the inventor that her name had been legally changed from Jennifer McCrory to Jennifer Jandak following divorce. Moreover, petitioner submitted the petition fee for the change. However, the petition was dismissed pursuant to MPEP § 605.04(c), on the basis that the petition did not include a proper affidavit of the relevant facts. Petitioner did not provide a certified copy of any court order effectuating the change of name.

On instant petition, petitioner provided a Statement in Support of Petition under 37 CFR 1.182; and more importantly, copies of both the Findings and Order of the Massachusetts' court and the

inventor's Judgment of Divorce, dated April 30, 1998 and June 1, 1998, respectively. In view thereof, the petition is granted.

DECISION ON PETITION UNDER § 1.47(b)

By decision mailed July 16, 2003, the initial petition under § 1.47(a), filed June 25, 2003, was dismissed for failure to provide adequate proof of the unavailability of inventors McCrory and Tremaglio (It was concluded that the evidence was sufficient to show that inventor Guterman had by his conduct refused to join in the application[1]).

A renewed petition was timely filed on October 16, 2003. However, the declarations executed by previously non-signing inventors McCrory (now Jandak) and Tremaglio were not acceptable as filed. (Inventor Guterman continued to refuse to sign). There was an inconsistency in the identification of inventor McCrory. The declarations executed by all of the signing joint inventors, except inventor McCrory, identify her as inventor Jennifer McCrory. The declaration signed by inventor McCrory identifies her as inventor Jennifer Jandak. It was determined that acceptance of such declarations with different given names for inventor McCrory required the filing of a petition under § 1.182, as provided for in MPEP 605.04(c). A decision on the petition under § 1.47 was held in abeyance. As stated above, the petition under § 1.182 has now been granted.

The declarations filed June 25, 2003 and the declarations filed October 16, 2003 joining inventors Jandak and Tremaglio, have been reviewed and found in compliance with 37 CFR 1.47(a).

This application is hereby accorded Rule 1.47(a) status.

As provided in new Rule 1.47(c), this Office will forward notice of this application's filing to non-signing inventor Guterman at the address given in the petition. Notice of the filing of this application will also be published in the Official Gazette.

The application file is being forwarded to the Office of Initial Patent Examination for completion of pre-examination processing.

Telephone inquiries regarding this decision should be directed to the undersigned at (703) 305-0309.

Nancy Johnson
Senior Petitions Attorney
Office of Petitions

---

[1] See declaration of facts of Patent Legal Secretary Brenda House dated October 16, 2003.

UNITED STATES PATENT AND TRADEMARK OFFICE

Commissioner for Patents
United States Patent and Trademark Office
P.O. Box 1450
Alexandria, VA 22313-1450
www.uspto.gov

AFS / ANGIODYNAMICS
666 THIRD AVENUE
FLOOR 10
NEW YORK NY 10017

COPY MAILED
NOV 0 5 2008

In re Application of	:
Chomenky et al.	:
Application No. 10/369020	: DECISION ON PETITION
Filing or 371(c) Date: 02/19/2003	: UNDER 37 CFR 1.78(a)(6)
Pat. Num. 6795728	:
Issue Date: 09/21/2004	
Title of Invention: APPARATUS AND METHOD FOR REDUCING SUBCUTANEOUS FAT DEPOSITS BY ELECTROPORATION	

This is a decision on the Petition Under 37 C.F.R. § 1.78(a)(6) to Accept Unintentionally Delayed Claim for Benefit Under 35 U.S.C. 119(e)," filed September 23, 2008, to accept an unintentionally delayed claim for the benefit of priority to a prior-filed provisional application.

The petition is **DISMISSED.**

A petition under 37 CFR 1.78(a)(6) is only applicable to those applications filed on or after November 29, 2000. Further, the petition is appropriate only after expiration of the period specified in 37 CFR 1.78(a)(5)(ii) and <u>must be filed during the pendency of the nonprovisional application</u>. In addition, the petition must be accompanied by:

(1) the reference required by 35 U.S.C. § 119(e) and 37 CFR 1.78(a)(5)(i) to the prior-filed application, unless previously submitted;
(2) the surcharge set forth in § 1.17(t); and
(3) a statement that the entire delay between the date the claim was due under 37 CFR 1.78(a)(5)(ii) and the date the claim was filed was unintentional. The Director may require additional information where there is a question whether the delay was unintentional.

This petition fails to satisfy item (1) above. In this regard, 37 CR 1.78(a)(5)(ii) requires that a claim for benefit of priority to a prior-filed provisional application must be submitted during the pendency of the application. Further to this, the MPEP 201.11(E) provides: If the later-filed application is a utility or plant application filed on or after November 29, 2000, the reference to the prior-filed application must be submitted within the time period set forth in 37 CFR 1.78(a) (e.g., <u>during</u>

the pendency of the later-filed application and within the later of 4 months from the actual filing date of the later-filed application or 16 months from the filing date of the prior-filed application) for a benefit claim under 35 U.S.C. 120, 121, or 365(c), and also for benefit claim under 35 U.S.C. 119(e). (Emphasis supplied).

As such, a Certificate of Correction is not a valid mechanism for adding or correcting a priority claim under 35 U.S.C. § 119(e) after a patent has been granted on an application filed on or after November 29, 2000. *See* MPEP 1481.03. Therefore, as this application matured into Patent No. 6,697,670 on February 24, 2004, a claim for benefit of priority to the above-noted provisional application cannot now be added by way of a Certificate of Correction.

Applicant may attempt to add the benefit claim by way of reissue. The MPEP 1481.03 provides:

> Where the application, which became the patent to be reissued, was filed on or after November 29, 2000, reissue may be employed to correct an applicant's mistake by adding or correcting a benefit claim under 35 U.S.C. 119(e). A petition under 37 CFR 1.78(a)(6) for an unintentionally delayed claim under 35 U.S.C. 119(e) would not be required in addition to filing a reissue application.
> Section 4503 of the American Inventors Protection Act of 1999 (AIPA) amended 35 U.S.C. 119(e)(1) to state that:
>
> > No application shall be entitled to the benefit of an earlier filed provisional application under this subsection unless an amendment containing the specific reference to the earlier filed provisional application is submitted at such time during the pendency of the application as required by the Director. The Director may consider the failure to submit such an amendment within that time period as a waiver of any benefit under this subsection. The Director may establish procedures, including the payment of a surcharge, to accept an unintentionally delayed submission of an amendment under this section ***during the pendency of the application***. (Emphasis added.)
>
> The court in Fontijn held that 35 U.S.C. 251 was sufficiently broad to correct a patent where the applicant failed to assert or failed to perfect a claim for foreign priority during the prosecution of the original application even though 35 U.S.C. 119(b) at that time required a claim and a certified copy of the foreign application to be filed before the patent is granted. Similarly, the Office may grant a reissue for adding or correcting a benefit claim under 35 U.S.C.119(e) that requires the benefit claim to a provisional application be submitted during the pendency of the application. (Emphasis supplied).

Further correspondence with respect to this matter should be addressed as follows:

By mail: Mail Stop PETITIONS
Director for Patents
Post Office Box 1450
Alexandria, VA 22313-1450

By hand: Customer Service Window
Mail Stop Petitions
Randolph Building
401 Dulany Street
Alexandria, VA 22314

By fax: (571) 273-8300
ATTN: Office of Petitions

Any questions concerning this matter may be directed to Derek Woods at (571) 272-3232.

Anthony Knight
Supervisor
Office of Petitions

UNITED STATES PATENT AND TRADEMARK OFFICE

Commissioner for Patents
United States Patent and Trademark Office
P.O. Box 1450
Alexandria, VA 22313-1450
www.uspto.gov

SHELL OIL COMPANY
P O BOX 2463
HOUSTON, TX 77252-2463

COPY MAILED

JUN 0 6 2005

OFFICE OF PETITIONS

In re Application of :
Kailash Dangayach, et al. :
Application No. 10/369,023 : ON PETITION
Filed: February 19, 2003 :
Attorney Docket No. TH1929 (US) :

This is a decision on the petition filed October 12, 2004, which is being treated under 37 CFR 1.78(a)(6) to accept an unintentionally delayed claim under 35 U.S.C.§ 119(e) for the benefit of prior-filed provisional Application No. 60/358,179, filed February 20, 2002 set forth in the concurrently filed amendment.

The petition is **DISMISSED AS MOOT**.

This application was filed on April 10, 2001, and was pending at the time of filing of the instant petition. While a reference to the prior-filed provisional application was not included in an ADS or in the first sentence of the specification following the title, reference nevertheless was made in the transmittal letter and the declaration filed with the above-identified application.

The current procedure where a claim for priority under 37 CFR 1.78(a)(6) is not included in the first sentence of the specification or in an ADS but does appear either in the oath or declaration or a transmittal letter filed with the application and the Office notes the claim for priority, no petition will be required to accept a late claim for priority. This is because the application would have been scheduled for publication on the basis of the information concerning the claim submitted elsewhere in the application within the time period set forth in 37 CFR 1.78(a)(5). However, on the other hand, if the USPTO does not note the claim for priority to the provisional application in the oath or declaration or transmittal letter submitted with the application, a petition will be required to accept a late claim for priority under 37 CFR 1.78(a)(6).[1] In this case, the Office noted the claim for priority of provisional Application No. 60/358,179 in the transmittal letter and the declaration filed with the application, as shown by its inclusion on the filing receipt.

In view of the above, no petition under 37 CFR 1.78(a)(6) or fee therefor is required.

---

[1] Note 66 Federal Register 67087 at 67089 (Dec. 28, 2001), effective December 28, 2001.

Any questions concerning this decision on petition may be directed to Sherry Brinkley at (571) 272-3204. All other inquiries concerning either the examination procedures or status of the application should be directed to the Technology Center.

This application is being referred to Technology Center AU 1732 for further consideration.

Sherry D. Brinkley
Petitions Examiner
Office of Petitions
Office of the Deputy Commissioner
for Patent Examination Policy

Frances M. Hicks
Lead Petitions Examiner
Office of Petitions
Office of the Deputy Commissioner
for Patent Examination Policy

UNITED STATES PATENT AND TRADEMARK OFFICE

Commissioner for Patents
United States Patent and Trademark Office
P.O. Box 1450
Alexandria, VA 22313-1450
www.uspto.gov

CHARLES R. SUTTON
8990 E. FLAPJACK RD.
PRESCOTTVALLEY, AZ 86314

COPY MAILED

JAN 3 1 2007

OFFICE OF PETITIONS

ON PETITION

In re Application of	:	
Lloyd, Robert Edward	:	
Application No. 10/369,035	:	
Filed: February 18, 2003	:	
Title: AQUARIUM ORNAMENTATINO SYSTEM	:	

This is a decision on the petition under 37 C.F.R. § 1.137(b), filed December 12, 2006, to revive the above-identified application.

The petition is **GRANTED.**

The petition satisfies the conditions for revival pursuant to the provisions of 37 CFR 1.137(b) in that (1) the reply in the form of the Issue Fee Transmittal with payment of the issue and publication fees; (2) the petition fee; and (3) the required statement of unintentional delay have been received. Accordingly, the response has been accepted as having been unintentionally delayed.

This matter is being referred to the Publishing Division for processing into a patent.

Telephone inquiries regarding this decision should be directed to the undersigned at (571) 272-3206.

Liana Walsh
Petitions Examiner
Office of Petitions

SPE RESPONSE FOR CERTIFICATE OF CORRECTION

DATE : 12-4-07

Paper No.: ____

TO SPE OF : ART UNIT 2891

SUBJECT : Request for Certificate of Correction on Patent No.: 6835604

A response is requested with respect to the accompanying request for a certificate of correction.

Please complete this form and return with file, within 7 days to:
Palm location **7580, Certificates of Correction Branch – South Tower – 9A22**
If response is for an IFW, **return to employee (named below) via PUBSCofC Team in MADRAS.**
With respect to the change(s) requested, correcting Office and/or Applicant's errors, should the patent read as shown in the certificate of correction (COCIN)? No new matter should be introduced, nor should the scope or meaning of the claims be changed.

Valerie Jackson

Thank You For Your Assistance

Certificates of Correction Branch
Tel. No. 703-308-9390 ext. 114

The request for issuing the above-identified correction(s) is hereby:
Note your decision on the appropriate box.

- ☒ **Approved** — All changes apply.
- ☐ **Approved in Part** — Specify below which changes **do not** apply.
- ☐ **Denied** — State the reasons for denial below.

Comments:

B. WILLIAM BAUMEISTER
SUPERVISORY PATENT EXAMINER
TECHNOLOGY CENTER 2800

SPE

2891
Art Unit

UNITED STATES PATENT AND TRADEMARK OFFICE

Commissioner for Patents
United States Patent and Trademark Office
P. O. Box 1450
Alexandria, VA 22313-1450
www. uspto. gov

JHK LAW
P.O. BOX 1078
LA CANADA, CA 91012-1078

COPY MAILED
SEP 27 2006
OFFICE OF PETITIONS

In re Application of	:	
Il-Hoan	:	
Application No. 10/369,053	:	ON PETITION
Filed: February 18, 2003	:	
Attorney Docket No. 12070-02USA	:	

This is a decision on the petition filed, June 2, 2006 under 37 CFR 1.137(b), to revive the above-identified application.

The petition is **GRANTED.**

The above-identified application became abandoned for failure to reply in a timely manner to the final Office action mailed October 3, 2005, which set a shortened statutory period for reply of three (3) months. No extension of time under the provisions of 37 CFR 1.136(a) were obtained. Accordingly, the above-identified application became abandoned on January 4, 2006.

The above-identified application is being revived solely for purposes of continuity with a Request For Continued Examination (RCE) filed on June 2, 2006.

An extension of time under 37 CFR 1.136 must be filed prior to the expiration of the maximum extendable period for reply. See In re Application of S., 8 USPQ2d 1630, 1631 (Comm'r Pats. 1988). Accordingly, since the $510 extension of time submitted with the petition on June 2, 2006 was subsequent to the maximum extendable period for reply, this fee is unnecessary and will be credited to petitioner's deposit account.

Telephone inquiries concerning this decision should be directed to Irvin Dingle at (571) 272-3210.

This matters is being referred to Technology Center AU 1647 for further processing.

Irvin Dingle
Petitions Examiner
Office of Petitions

UNITED STATES PATENT AND TRADEMARK OFFICE

Commissioner for Patents
United States Patent and Trademark Office
P.O. Box 1450
Alexandria, VA 22313-1450
www.uspto.gov

HARNESS DICKEY & PIERCE, P.L.C.
7700 BONHOMME, SUITE 400
CLAYTON, MO 63105

COPY MAILED

JUN 29 2005

OFFICE OF PETITIONS

In re Application of :
Michael L. Vazquez et al :
Application No. 10/369,055 :
Filed: February 18, 2003 :
Attorney Docket No. 18438/09030 :

ON PETITION

This is a decision on the petition under 37 CFR 1.137(b), filed May 18, 2005, to revive the above-identified application.

The petition is **GRANTED**.

The above-identified application became abandoned for failure to reply in a timely manner to the Office action mailed August 9, 2004, which set a shortened statutory period for reply of one (1) month or thirty (30) days (whichever is later). No extensions of time under the provisions of 37 CFR 1.136(a) were obtained. Accordingly, the above-identified application became abandoned on September 10, 2004.

An extension of time under 37 CFR 1.136 must be filed prior to the expiration of the maximum extendable period for reply. See In re Application of S., 8 USPQ2d 1630, 1631 (Comm'r Pats. 1988). Accordingly, since the $1020 extension of time submitted with the petition on May 18, 2005 was subsequent to the maximum extendable period for reply, this fee is unnecessary and will be credited to petitioner's deposit account.

Telephone inquiries concerning this decision should be directed to Irvin Dingle at (571) 272-3210.

The matter is being referred to Technology Center AU 1626 for further processing.

Irvin Dingle
Petitions Examiner
Office of Petitions
Office of the Deputy Commissioner
for Patent Examination Policy

UNITED STATES PATENT AND TRADEMARK OFFICE

Commissioner for Patents
United States Patent and Trademark Office
P.O. Box 1450
Alexandria, VA 22313-1450
www.uspto.gov

Paper No. 8

MELVIN A. HUNN
HILL & HUNN
SUITE 1440
201 MAIN STREET
FORT WORTH, TX 76102

COPY MAILED

JUL 21 2005

OFFICE OF PETITIONS

In re Application of	:	
Frederick Herz et al	:	
Application No. 10/369,057	:	ON PETITION
Filed: February 17, 2003	:	
Attorney Docket No. 0635MH-40905C	:	

This is a decision on the petition under 37 CFR 1.137(b), filed April 29, 2005, to revive the above-identified application.

The petition is **GRANTED**.

The above-identified application became abandoned for failure to reply in a timely manner to the Notice to File Missing Parts of Nonprovisional Application (Notice) mailed March 28, 2003. The Notice set a period for reply of two (2) months from the mail date of the Notice. No extensions of time under the provisions of 37 CFR 1.136(a) were obtained. Accordingly, the above-identified application became abandoned on May 29, 2003.

37 CFR 1.137(b)(3) requires a statement that the entire delay in filing the required reply from the due date for the reply until the filing of a grantable petition pursuant to 37 CFR 1.137(b) was unintentional. If the statement contained in the instant petition varies from the language required by 37 CFR 1.137(b)(3), the statement contained in the instant petition is being construed as the statement required by 37 CFR 1.137(b)(3) and petitioner must notify the Office if this is **not** a correct interpretation of the statement contained in the instant petition.

Telephone inquiries concerning this decision should be directed to Wan Laymon at (571) 272-3220.

The application file is being forwarded to the Office of Initial Patent Examination.

Wan Laymon
Petitions Examiner
Office of Petitions
Office of the Deputy Commissioner
for Patent Examination Policy

UNITED STATES PATENT AND TRADEMARK OFFICE

COMMISSIONER FOR PATENTS
UNITED STATES PATENT AND TRADEMARK OFFICE
P.O. BOX 1450
ALEXANDRIA, VA 22313-1450
www.uspto.gov

Paper No.

Brinks Hofer Gilson & Lione
P.O. Box 10395
Chicago IL 60610

COPY MAILED

JUN 25 2007

OFFICE OF PETITIONS

In re Patent No. 7,102,858 :
Takahashi et al. :
Issue Date: September 5, 2006: LETTER REGARDING
Application No. 10/369,058 : PATENT TERM ADJUSTMENT
Filed: February 18, 2003 :
Atty Docket No. 9281-4465 :

This is in response to the REQUEST FOR REVIEW OF PATENT TERM ADJUSTMENT filed October 2, 2006, pursuant to patentee's duty of good faith and candor. Patentees disclose that the patent term adjustment indicated on the patent may be incorrect.

The request for correction of the patent term adjustment indicated in the patent is **DISMISSED**.

Patentees are given **TWO MONTHS** to respond to this decision. No extensions of time will be granted under 37 C.F.R. § 1.136.

On September 5, 2006, the above-identified application matured into U.S. Patent No. 7,102,858, with a revised Patent Term Adjustment of 428 days. Patentees state no basis for their assertion that this calculation may be incorrect.

Patentees' attempt at candor is appreciated. However, the PTA calculation is correct. A period of adjustment of 548 days was properly entered pursuant to 37 CFR §§ 1.702(a)(1) and 1.703(a)(1) for the mailing of a restriction requirement on August 26, 2004, which is more than 14 months from the filing date and 1.703(a)(6) for the issuance of this patent on September 5, 2006, which is more than four months from the payment of the issue fee on March 14, 2005. This period was

properly reduced by the lesser period of 120 days pursuant to 37 CFR 1.704(c)(10) for the filing of an information disclosure statement on March 31, 2005, subsequent to the submission of the mailing of the notice of allowance.

In view thereof, the patent properly issued with a revised patent term adjustment of 428 days.

To the extent that this letter was submitted as an advisement to the Office of an error in Patentees' favor, the Office will not assess the $200.00 fee under 37 CFR 1.18(e). The Office thanks patentees for their good faith and candor in bringing this to the attention of the Office.

Petitioner is reminded that all registered practitioners are under a general obligation of candor and good faith in practice before the Office. It follows that if a practitioner is aware of an error in the calculation of the Patent Term Adjustment that has not been discovered by the Office, the mere filing of a letter without an additional and specific disclosure of this error will not serve to discharge practitioner's duty of candor and good faith.

Telephone inquiries specific to this matter should be directed to Senior Attorney Paul Shanoski at (571) 272-3225.

Nancy Johnson
Senior Petitions Attorney
Office of Petitions

UNITED STATES PATENT AND TRADEMARK OFFICE

COMMISSIONER FOR PATENTS
UNITED STATES PATENT AND TRADEMARK OFFICE
P.O. BOX 1450
ALEXANDRIA, VA 22313-1450
www.uspto.gov

MAILED

APR 1 7 2004

Office of the Director
Group 3600

CHRISTIE, PARKER & HALE, LLP
P.O. BOX 7068
PASADENA CA 91109-7068

In re application of
Rex E. Duhn et al.
Application No. 10/369,070
Filed: February 19, 2003
For: WELLHEAD ISOLATION TOOL

DECISION ON PETITION TO MAKE SPECIAL (INFRINGEMENT)

This is a decision on the petition under 37 C.F.R § 1.102(d) filed May 19, 2003 to make the above-identified application special under the procedure set forth in M.P.E.P. § 708.02, item II: Infringement. The delay in deciding this petition is regretted.

MPEP 708.02 states that a Petition to Make Special based on Infringement must have the following: (1) the appropriate petition fee under 37 CFR 1.17(i); (2) a statement by the assignee, applicant, or attorney alleging: (A) that there is an infringing device or product actually on the market or method in use; (B) that a rigid comparison of the alleged infringing device, product or method with the claims of the application has been made, and that, in his or her opinion, some of the claims are unquestionably infringed; and (C) that he or she has made a careful and thorough search of the prior art, or has good knowledge of the prior art, and has sent a copy of the references deemed most closely related to the subject matter encompassed by the claims.

The petition filed May 19, 2003 meets all of the requirements above and, therefore, the petition is **GRANTED**.

The examiner is directed (1) to make an interference search for possible interfering applications; (2) to promptly examine this application out of turn; and (3) if any interfering application is discovered, to examine such application simultaneously and state in the first official letter of such application that it is being taken out of turn because of a possible interference.

Petitioner is advised that this application will continue to be special, throughout its entire prosecution and pendency, including interference and appeal, if any, only if petitioner makes a prompt *bona fide* effort, in response to each Office action, to place the application in condition for allowance, even if it is necessary to conduct an interview with the examiner to accomplish this purpose.

SUMMARY: Petition to Make Special **GRANTED**.

Steven N. Meyers
Special Programs Examiner
Technology Center 3600
(703) 308-3868

SNM/mjz: 4/9/04

UNITED STATES PATENT AND TRADEMARK OFFICE

Commissioner for Patents
United States Patent and Trademark Office
P.O. Box 1450
Alexandria, VA 22313-1450
www.uspto.gov

ANDREW D. STOVER
BRINKS HOFER GILSON & LIONE
P O BOX 10395
CHICAGO, IL 60610

COPY MAILED

FEB 2 4 2005

OFFICE OF PETITIONS

In re Application of	:
Richard Blacker et al	:
Application No. 10/369,091	: DECISION GRANTING PETITION
Filed: February 18, 2003	: UNDER 37 CFR 1.313(c)(2)
Attorney Docket No. 6298-425	:

This is a decision on the petition, filed February 23, 2005, under 37 CFR 1.313(c)(2) to withdraw the above-identified application from issue after payment of the issue fee.

The petition is **GRANTED**.

The above-identified application is withdrawn from issue for consideration of a submission under 37 CFR 1.114 (request for continued examination). See 37 CFR 1.313(c)(2).

Petitioner is advised that the issue fee paid on September 23, 2004 in the above-identified application cannot be refunded. If, however, the above-identified application is again allowed, petitioner may request that it be applied towards the issue fee required by the new Notice of Allowance.[1]

Telephone inquiries should be directed to the undersigned at (571) 272-3218.

This matter is being referred to Technology Center AU 3754 for processing of the request for continued examination under 37 CFR 1.114 and for consideration of the concurrently filed Information Disclosure Statement.

Frances Hicks
Petitions Examiner
Office of Petitions
Office of the Deputy Commissioner
for Patent Examination Policy

---

[1] *The request to apply the issue fee to the new Notice may be satisfied by completing and returning the new Issue Fee Transmittal Form PTOL-85(b), which includes the following language thereon: "Commissioner for Patents is requested to apply the Issue Fee and Publication Fee (if any) or re-apply any previously paid issue fee to the application identified above." Petitioner is advised that, whether a fee is indicated as being due or not, the Issue Fee Transmittal Form* **must** *be completed and timely submitted to avoid abandonment. Note the language in bold text on the first page of the Notice of Allowance and Fee(s) Due (PTOL-85).*

UNITED STATES PATENT AND TRADEMARK OFFICE

COMMISSIONER FOR PATENTS
UNITED STATES PATENT AND TRADEMARK OFFICE
P.O. BOX 1450
ALEXANDRIA, VA 22313-1450
www.uspto.gov

Andrew D. Stover
BRINKS HOFER GILSON & LIONE
P.O. Box 10395
Chicago, IL 60610

COPY MAILED

APR 18 2005

OFFICE OF PETITIONS

In re Application of	:	
Blacker et al.	:	
Application No. 10/369,091	:	DECISION ON APPLICATION
Filed: February 18, 2003	:	FOR
Attorney Docket No. 6298-425	:	PATENT TERM ADJUSTMENT
	:	

This is a decision on the "REQUEST FOR RECONSIDERATION OF PATENT TERM ADJUSTMENT PURSUANT TO 37 C.F.R. § 1.705(b)," filed September 23, 2004. Applicants request that the initial determination of patent term adjustment under 35 U.S.C. 154(b) be corrected from eleven (11) days to thirty-four (34) days.

The application for patent term adjustment is **GRANTED**.

The Office has updated the PAIR screen to reflect that the correct Patent Term Adjustment (PTA) determination at the time of the mailing of the Notice of Allowance is **34** days. A copy of the updated PAIR screen, showing the correct determination, is enclosed.

On, the Office mailed the Determination of Patent Term Adjustment under 35 U.S.C. 154(b) in the above-identified application. The Notice stated that the patent term adjustment (PTA) to date is 11 days. On September 23, 2004, applicants timely[1] submitted an application for patent term adjustment. Applicants dispute the reduction of 57 days attributed to their delay in responding to the Notice to File Missing Parts of Application mailed March 26, 2003. Applicants state that their

[1] PALM records indicate that the Issue Fee was also received in the Office on September 23, 2004.

response was received in the Office on July 30, 2003, and thus, the period of reduction should have been 34 days.

Applicants specifically state that the patent issuing from the application is not subject to a terminal disclaimer.

Applicants are correct. Their response to the Notice to File Missing Parts of Application mailed March 26, 2003, is of record in the application with a date of receipt by the Office of July 30, 2003. Furthermore, the response has been accepted as a complete reply to the Notice. Thus, the Office should not have assessed applicants a delay of 57 days. The response was filed outside the three-month period under 37 CFR 1.704(b), but only by 34 days. Thus, the period of adjustment of 68 days entered for Office delay in mailing a first notice of allowance later than fourteen months after the filing date of the application should have been reduced by 34 days for applicant delay in replying to the Notice to File Missing Parts of Application.

In view thereof, the correct determination of patent term adjustment at the time of the mailing of the Notice of Allowance is thirty-four (34) days.

The Office acknowledges submission of the $200.00 fee set forth in 37 CFR 1.18(e). No additional fees are required.

The application is being forwarded to the Office of Patent Publication for processing into a patent.

Telephone inquiries specific to this matter should be directed to Nancy Johnson, Senior Petitions Attorney, at (571) 272-3219.

Karin Ferriter
Senior Legal Advisor
Office of Patent Legal Administration
Office of Deputy Commissioner
for Patent Examination Policy

Enclosure: Copy of Revised PAIR Screen

UNITED STATES PATENT AND TRADEMARK OFFICE

Commissioner for Patents
United States Patent and Trademark Office
P.O. Box 1450
Alexandria, VA 22313-1450
www.uspto.gov

STEVEN PATRICK STARK
713 WEST RIVER ROAD
CHAMPLIN, MN 55316

COPY MAILED
JAN 14 2008
OFFICE OF PETITIONS

In re Application of	:	
Steven Patrick Stark	:	
Application No. 10/369,099	:	DECISION ON PETITION
Filed: February 15, 2003	:	
Attorney Docket No.	:	

This is a decision on the petition under the unintentional provisions of 37 CFR 1.137(b), filed August 29, 2007, to revive the above-identified application.

The petition is **GRANTED**.

This application became abandoned for failure to timely file a reply within the meaning of 37 CFR 1.113 to the final Office action of October 19, 2007. The proposed reply required for consideration of a petition to revive must be a Notice of Appeal (and appeal fee required by 37 CFR 41.20(b)(2)), an amendment that *prima facie* places the application in condition for allowance, a Request for Continued Examination (RCE) and submission (37 CFR 1.114), or the filing of a continuing application under 37 CFR 1.53(b). See MPEP 711.03(c)(III)(A)(2). No extensions of time pursuant to the provisions of 37 CFR 1.136(a) were obtained. Accordingly, the date of abandonment of this application is .

The petition satisfies the requirements of 37 CFR 1.137(b) in that petitioner has supplied (1) the reply in the form of a Notice of Appeal; (2) the petition fee of $750; and (3) a proper statement of unintentional delay.

The two-month period for filing an appeal brief under 37 CFR 41.37 (accompanied by the fee required by 37 CFR 41.20(b)(2)), runs from the date of this decision.

37 CFR 1.137(c) requires a terminal disclaimer dedicating to the public a terminal part of the term of any patent granted on the above-identified application or any patent granted on any continuing application that contains a specific reference under 35 U.S.C. 120, 121, or 365(c) to the above-identified application. Since the application is not a utility or plant application filed on

or before June 8, 1995, a terminal disclaimer is not required. Accordingly, the terminal disclaimer and $65 fee filed with the instant petition is unnecessary.

The petitioner may request a refund of this fee by writing to the following address: Mail Stop 16, Commissioner for Patents, P. O. Box 1450, Alexandria, VA 22313-1450. A copy of this decision should accompany petitioner's request.

Telephone inquiries concerning this decision should be directed to undersigned at (571) 272-1642.

This application is being referred to Technology Center AU 3725 to await the filing of an appeal brief or for such other appropriate reply as may be submitted to continue prosecution of the application.

April M. Wise
Petitions Examiner
Office of Petitions

UNITED STATES PATENT AND TRADEMARK OFFICE

COMMISSIONER FOR PATENTS
UNITED STATES PATENT AND TRADEMARK OFFICE
P.O. BOX 1450
ALEXANDRIA, VA 22313-1450
www.uspto.gov

Paper No. 7

HAMILTON, BROOK, SMITH & REYNOLDS, P.C.
530 VIRGINIA ROAD
P.O. BOX 9133
CONCORD MA 01742-9133

COPY MAILED

NOV 26 2003

OFFICE OF PETITIONS

In re Application of
Raymond J. Dattwyler et al.
Reissue Application No. 10/369,100
Filed: February 18, 2003
Attorney Docket No. 2631.1001-011

DECISION ACCORDING STATUS
UNDER 37 CFR 1.47(a)

This is in response to the petition under 37 CFR 1.47(a), filed September 30, 2003 (certificate of mail date).

The petition is GRANTED.

The above-identified application was filed on February 18, 2003, without an executed oath or declaration and naming Raymond J. Dattwyler, Maria J.C. Gomes-Solecki, Benjamin J. Luft and John J. Dunn as co-inventors.

Accordingly, on April 30, 2003, a "Notice To File Missing Parts of Application" was mailed, requiring filing fees, an executed oath or declaration and a surcharge for their late filing. A two month period for reply was set.

In response, on September 30, 2003, the instant petition under 37 CFR 1.47(a), a declaration executed only by co-inventors Dattwyler, Gomes-Solecki and Dunn, and petition for three month extension of time was filed claiming that co-inventor Benjamin J. Luft refused to execute the declaration. Co-inventor Luft's last known address and the required fees were also submitted. The petition bears proof that the application papers were sent on two separate occasions to Mr. Luft and that by way of a registered mail return receipt, proves that the application papers had been delivered/received by the offices of Mr. Luft.

A grantable petition under 37 CFR 1.47(a) requires: (1) proof that the non-signing inventor cannot be reached or refuses to sign the oath or declaration after having been presented with the application papers (specification, claims and drawings); (2) an acceptable oath or declaration in compliance with 35 U.S.C. §§ 115 and 116; (3) the petition fee; and (4) a statement of the last known address of the non-signing inventor.

The above-identified application and papers have been reviewed and found in compliance with 37 CFR 1.47(a). In view thereof, this application is hereby accorded Rule 1.47(a) status.

Thus, as provided in Rule 1.47(c), this Office will forward notice of this application's filing to the non-signing inventor at the address given in the petition. Notice of the filing

of this application will also be published in the Official Gazette.

The application is being forwarded to the Office of Initial Patent Examination for further processing.

Telephone inquiries related to this decision should be directed to the undersigned Petitions Attorney at (703) 305-4497.

Patricia Faison-Ball
Senior Petitions Attorney
Office of Petitions

UNITED STATES PATENT AND TRADEMARK OFFICE

COMMISSIONER FOR PATENTS
UNITED STATES PATENT AND TRADEMARK OFFICE
P.O. BOX 1450
ALEXANDRIA, VA 22313-1450
www.uspto.gov

Paper No. 8

BENJAMIN J. LUFT, M.D.
DIVISION OF INFECTIOUS DISEASE
DEPARTMENT OF MEDICINE
HEALTH SCIENCES CENTER
LEVEL 16, ROOM 020
S.U.N.Y. AT STONY BROOK
STONY BROOK, NY 11794-8160

COPY MAILED

NOV 26 2003

OFFICE OF PETITIONS

In re Application of
Raymond J. Dattwyler et al.
Application No. 10/369,100
Filed: February 18, 2003
For: RECOMBINANT CONSTRUCTS OF BORRELIA BURGDORFERI

Dear Mr. Luft:

You are named as a joint inventor in the above identified United States patent application, filed under the provisions of 35 U.S.C. 116 (United States Code), and 37 CFR 1.47(a), Rules of Practice in Patent Cases. Should a patent be granted on the application you will be designated therein as a joint inventor.

As a named inventor you are entitled to inspect any paper in the file wrapper of the application, order copies of all or any part thereof (at a prepaid cost per 37 CFR 1.19) or make your position of record in the application. Alternatively, you may arrange to do any of the preceding through a registered patent attorney or agent presenting written authorization from you. If you care to join the application, counsel of record (see below) would presumably assist you. Joining in the application would entail the filing of an appropriate oath or declaration by you pursuant to 37 CFR 1.63.

Telephone inquiries regarding this communication should be directed to the undersigned Petitions Attorney at (703) 305-4497. Requests for information regarding your application should be directed to the File Information Unit at 703/308-2733. Information regarding how to pay for and order a copy of the application, or a specific paper in the application, should be directed to Certification Division at 703/308-9726 or 1-800-972-6382 (outside the Washington D.C. area).

Patricia Faison-Ball

Patricia Faison-Ball
Senior Petitions Attorney
Office of Petitions

cc:
HAMILTON, BROOK, SMITH & REYNOLDS, P.C.
530 VIRGINIA ROAD
P.O. BOX 9133
CONCORD MA 01742-9133

UNITED STATES PATENT AND TRADEMARK OFFICE

Commissioner for Patents
United States Patent and Trademark Office
P.O. Box 1450
Alexandria, VA 22313-1450
www.uspto.gov

May 10, 2006

Doreen M. Hogle
HAMILTON, BROOK, SMITH & REYNOLDS, P.C.
530 Virginia Road, P. O. Box 9133
Concord, MA 01742-9133

Patent No.: 7,008,625 B2
Application No.: 10/369100
Inventor(s): Raymond J. Dattwyler, et al.
Issued: Mar. 7, 2006
Title: RECOMBINANT CONSTRUCTS OF ***BORRELIA BURGDORFERI***

Re: Request for Certificate of Correction

Consideration has been given your request for the issuance of a certificate of correction for the above-identified patent under the provisions of Rule(s) 1.322 and/or 1.323.

Assignees' names and addresses (assignment data) printed in a patent, are based *solely* on information supplied in the appropriate space for identifying the assignment data, i.e., item 3 of the Issue Fee Transmittal Form PTOL-85B. Granting of a request under 37 CFR 3.81(b) is required to correct applicant's error providing ***incorrect or erroneous*** assignment data, *before* issuance of a Certificate of Correction, under 37 CFR 1.323 *(see Manual of Patent Examining Procedures (M.P.E.P) Chp.1400, sect. 1481).* This procedure is required *at any time after the issue fee is paid*, including after issuance of the patent.

In view of the foregoing, your request, in this mater, is hereby denied.

A request to correct the Assignee under 37 CFR 3.81(b) should include:

A. **the processing fee set forth in 37 CFR 1.117(h) (currently $130);**
B. a statement that the failure to include the correct assignee name on the PTOL-85B was inadvertent; and
C. a copy of the Notice of Recordation of Assignment Document, reflecting the reel and frame number where the assignment(s) is recorded and/or reflecting proof of *the date* the assignment was submitted for recordation.

In the Request, Applicant(s) may request that the file be forwarded to Certificates of Correction Branch, for issuance of a Certificate of Correction, if the Request is granted.

Any request under 37 CFR 3.81(b) should be directed to the following address or facsimile number:

By mail:	Mail Stop PETITIONS Commissioner for Patents Post Office Box 1450 Alexandria, VA 22313-1450
By hand:	Customer Service Window Mail Stop Petitions Randolph Building 401 Dulany Street Alexandria, VA 22314
By fax:	(703) 872-9306 ATTN: Office of Petitions

If a fee (currently $100) was previously submitted for consideration of a Request for Certificate of Correction, under CFR 1.323, to correct assignment data, no additional fee is required.

Virginia Tolbert
For Cecelia Newman
Decisions & Certificate of Correction Branch
(703) 305-8309 or (703) **308-9390 ext 113**

vt

UNITED STATES PATENT AND TRADEMARK OFFICE

Commissioner for Patents
United States Patent and Trademark Office
P.O. Box 1450
Alexandria, VA 22313-1450
www.uspto.gov

HAMILTON, BROOK, SMITH & REYNOLDS, P.C.
530 VIRGINIA ROAD
P.O. BOX 9133
CONCORD MA 01742-9133

COPY MAILED

NOV 09 2006

OFFICE OF PETITIONS

ON PETITION

In re Patent No. 7,008,625 :
Issued March 7, 2006 :
Application No. 10/369,100 :
Filed: February 18, 2003 :
Attorney Docket Number: 2631.1001-011 :

This is a decision on the request for certificate of correction filed April 25, 2006, to correct the assignee's name on the front of the Patent, which is being treated as a request under 37 CFR 3.81(b)[1].

The petition is **DISMISSED**.

The petition claims that assignment data was included in the PTOL-85B filed July 13, 2005 and on a continuation sheet but that the patent issued only in the name of the first assignee and not the second assignee. Accordingly, petitioner requests that a certificate of correction be issued to include the name of the second assignee and that because the information was timely provided, in accordance with the assignment recorded October 2, 2003, no fees for the petition of the certificate of correction should be required.

37 CFR 3.81(b), effective June 25, 2004, reads:

> *After payment of the issue fee:* Any request for issuance of an application in the name of the assignee submitted after the date of payment of the issue fee, and any request for a patent to be corrected to state the name of the assignee, must state that the assignment was submitted for recordation as set forth in § 3.11 before issuance of the patent, and must include a request for a certificate of correction under § 1.323 of this chapter (accompanied by the fee set forth in § 1.20(a) and the processing fee set forth in § 1.17(i) of this chapter.

The petition however, is not accompanied by the petition fee or the certificate of correction fee as required by 37 CFR §§ 1.323 and 3.81(b) and thus is not grantable. Only one assignee was included on the Issue Fee(s) Transmittal form PTOL-85(b) at

---

[1] *See* Official Gazette of June 22, 2004

the time of payment of the issue fee on July 13, 2005 however, the requirement is for assignee data to appear in box 3 of the Issue Fee Transmittal, not on a continuation sheet.

In view thereof, the failure to include the second assignee on the face of the patent was not an error caused by the United State Patent and Trademark Office.

If petitioner would like to have a certificate of correction issued with the name of the second assignee, a renewed petition under 37 CFR 3.81 and the appropriate fees as required by 37 CFR §§ 1.323 and 3.81(b) will be required.

Any request for reconsideration should be filed within **TWO MONTHS** of the date of this decision in order to be considered timely. This time period may not be extended pursuant to 37 CFR 1.136.

Further correspondence with respect to this matter should be addressed as follows:

By mail: Mail Stop Petitions
Commissioner for Patents
P.O. Box 1450
Alexandria, VA 22313-1450

By FAX: (571) 273-8300
Office of Petitions

Telephone inquiries regarding this decision should be directed to the undersigned Petitions Attorney at (571) 272-3212.

Patricia Faison-Ball

Patricia Faison-Ball
Senior Petitions Attorney
Office of Petitions

UNITED STATES PATENT AND TRADEMARK OFFICE

Commissioner for Patents
United States Patent and Trademark Office
P.O. Box 1450
Alexandria, VA 22313-1450
www.uspto.gov

HAMILTON, BROOK, SMITH & REYNOLDS, P.C.
530 VIRGINIA ROAD
P.O. BOX 9133
CONCORD MA 01742-9133

COPY MAILED

OCT 12 2007

OFFICE OF PETITIONS

In re Patent No. 7,008,625 :
Issued March 7, 2006 :
Application No. 10/369,100 : ON PETITION
Filed: February 18, 2003 :
Attorney Docket Number: 2631.1001-011 :

This is a decision on the request for reconsideration filed December 7, 2006 and resubmitted April 23, 2007, to issue the patent in the name of the assignees. The petition is treated under 37 CFR 3.81 (b)[1].

The petition is **GRANTED**.

Petitioner states that the failure to include the correct name of both assignees on the Fee(s) Transmittal form PTOL-85(b) was inadvertent. Accordingly, petitioner requests that a certificate of correction be issued to reflect the correct name of the assignee on the front page of the Letters Patent.

37 CFR 3.81(b), effective June 25, 2004, reads:

> *After payment of the issue fee:* Any request for issuance of an application in the name of the assignee submitted after the date of payment of the issue fee, and any request for a patent to be corrected to state the name of the assignee, must state that the assignment was submitted for recordation as set forth in § 3.11 before issuance of the patent, and must include a request for a certificate of correction under § 1.323 of this chapter (accompanied by the fee set forth in § 1.20(a) and the processing fee set forth in § 1.17(i) of this chapter.

---

[1]Any request for issuance of an application in the name of the assignee submitted after the date of the payment of the issue fee, and any request that a patent be corrected to state the name of assignee must:

(A) state the assignment was submitted for recordation as set forth in 37 CFR §3.11 before issuance of the patent;
(B) provide a request for a certificate of correction §1.323;
(C) provide the fee set forth in 37 CFR §1.20 (a) and
(D) provide the processing fee set forth in 37 CFR §1.17(i)

A petition was filed April 25, 2006 and was dismissed in a decision mailed November 9, 2006 since the request was not accompanied by a certificate of correction or the processing fee.

Office assignment records however, reflect that Brookhaven Sciences Associates, LLC is also an assignee of record. Accordingly, as the request complies with the provisions of 37 CFR 3.81(b), it would be appropriate for a certificate of correction to issue.

The fee for the certificate of correction and the processing fee have been applied.

Inquiries concerning this decision should be directed to the undersigned at (571) 272-3212. Any questions concerning the issuance of a certificate of correction should be directed to the Certificates of Correction Branch at (703) 305-8309.

This file is being referred to the Certificates of Correction Branch for issuance of a certificate of correction.

Patricia Faison-Ball

Patricia Faison-Ball
Senior Petitions Attorney
Office of Petitions

UNITED STATES PATENT AND TRADEMARK OFFICE

Commissioner for Patents
United States Patent and Trademark Office
P.O. Box 1450
Alexandria, VA 22313-1450
www.uspto.gov

Paper No.

STERNE, KESSLER, GOLDSTEIN & FOX PLLC
1100 NEW YORK AVENUE, N.W.
WASHINGTON DC 20005

COPY MAILED
NOV 14 2006
OFFICE OF PETITIONS

In re Application of :
Del Puerto et al. : DECISION ON PETITION
Application No. 10/369,108 :
Filed: February 20, 2003 :
Atty Docket No. 1857.0810003 :

This is a decision on the "Petition to Request Unpaid Extension of Time to be Charged to Our Account under 37 C.F.R. § 1.182, or in the alternative, Petition for Revival of an Application for Patent Unintentionally Abandoned under 37 C.F.R. § 1.137" filed September 8, 2006. The Petition to Request Unpaid Extension of Time to be Charged is being treated under 37 C.F.R. § 1.181 (non-fee petition).

The petition under § 1.181 is **GRANTED**.

The petition under § 1.137 is **DISMISSED AS MOOT**.

Applicants disclose to the Office that required extension of times have not been charged to their Deposit Account. Applicants' disclosure has been considered, and it is concluded that:

- Applicants' response filed November 23, 2005 was submitted within the three-month shortened statutory period set in the Office action mailed August 23, 2005. Accordingly, no extension of time was required or charged.

- Applicants' response filed September 27, 2006 was submitted within the three-month shortened statutory period set in the Office action mailed June 30, 2006. (This Office action modified the Office action mailed June 7, 2006). Accordingly, no extension of time was required or charged.

- However, entry of a one-month extension of time is necessary. The Office mailed a final Office action on January 19, 2006, which set a three-month shortened statutory period for response with extensions of time obtainable under 1.136(a). On April 19, 2006, applicants filed a request for continued examination (RCE) and Information Disclosure Statement (IDS). This response was proper to the extent that an IDS satisfies the submission requirements pursuant to § 1.114. However, a complete and proper response in compliance with § 1.113(c) was not filed until an amendment was filed on April 21, 2006. Accordingly, an extension of time within the first month was required to make this response timely. Moreover, a review of the response confirms that as filed it included an authorization to charge any required fees to a Deposit Account. Pursuant to this authorization, this fee is now being charged to petitioners' Deposit Account.

Given the timely requests for extension of time where necessary, petitioners' responses are properly considered timely filed. To date, this application is not considered abandoned for failure to timely file a response to an Office action.

As such, consideration of the petition to revive is unnecessary. No petition fee is required and none has been charged.

The Office thanks applicants for their good faith and candor in bringing this to the attention of the Office.

This application will continue to be examined.

Telephone inquiries specific to this decision should be directed to the undersigned at (571) 272-3219.

Nancy Johnson
Senior Petitions Attorney
Office of Petitions

UNITED STATES PATENT AND TRADEMARK OFFICE

Commissioner for Patents
United States Patent and Trademark Office
P.O. Box 1450
Alexandria, VA 22313-1450
www.uspto.gov

GOODWIN PROCTER LLP
PATENT ADMINISTRATOR
53 STATE STREET
EXCHANGE PLACE
BOSTON MA 02109-2881

COPY MAILED
NOV 03 2008
OFFICE OF PETITIONS

In re Application of	:	
Shuber et al.	:	
Application No.: 10/369123	:	DECISION ON
Filing or 371(c) Date: 02/18/2003	:	PETITION
Attorney Docket Number: EXT-059	:	

This is a decision in response to the Petition Under 37 CFR 1.137(a) for Revival of an Application for Patent Abandoned Unavoidably, filed September 23, 2008.

This Petition is hereby **dismissed**.

Any further petition must be submitted within TWO (2) MONTHS from the mail date of this decision. Extensions of time under 37 CFR 1.136(a) are permitted. The reconsideration request should include a cover letter entitled "Renewed Petition under [insert the applicable code section]." This is **not** final agency action within the meaning of 5 U.S.C. § 704.

The above-identified application became abandoned for failure to timely reply to the non-final Office action, mailed January 23, 2008. The Office action set a three (3) period for reply. Extensions of time under 37 CFR 1.136(a) were available. No reply having been received, the application became abandoned on April 24, 2008. A Notice of Abandonment was mailed September 22, 2008.

Applicant files the present petition and asserts that the delay was unavoidable because the Office Action was not received at the correspondence address of record. Applicant provides that the Office action, a copy of which is available on the Patent Application Information and Retrieval (PAIR) system, was properly addressed. Applicant also files a copy of the PAIR record for this application which indicate that the Office action was returned to this Office as undelivered by the United States Postal Service (USPS).

A Grantable Petition Under 37 CFR 1.137(a)

A grantable petition to revive an abandoned application under 37 CFR 1.137(a) must be accompanied by: (1) the required reply (unless previously filed), which may met by the filing of a notice of appeal and the requisite fee; a continuing application; an amendment or request for reconsideration which *prima facie* places the application in condition for allowance, or a first or

second submission under 37 CFR 1.129(a) if the application has been pending for at least two years as of June 8, 1995, taking into account any reference made in such application to any earlier filed application under 35 USC 120, 121 and 365(c); (**2**) the petition fee as set forth in 37 CFR 1.17(l); (**3**) a showing to the satisfaction of the Director that the entire delay in filing the required reply from the due date for the reply until the filing of a grantable petition pursuant to 37 CFR 1.137(a) was unavoidable; and (**4**) any terminal disclaimer (and fee as set forth in 37 CFR 1.20(d)) required pursuant to 37 CFR 1.137(c).

Applicant lacks item (**3**) as set forth above.

As to item (**3**), a showing of non-receipt of an Office communication may form the basis for revival of an application based upon unavoidable delay.

Applicable Law, Rules and MPEP

The MPEP 711.03(c)A, provides in relevant part:

> The showing required to establish nonreceipt of an Office communication must include
>
> (1) a statement from the practitioner stating that the Office communication was not received by the practitioner at the correspondence address of record. The statement should establish that the docketing system is sufficiently reliable. It is expected that the record would include, but not be limited to, the application number, attorney docket number, the mail date of the Office action and the due date for the response.
>
> (2) a statement from the practitioner attesting to the fact that a search of the file jacket and docket records indicates that the Office communication was not received.
>
> (3) a copy of the docket record where the nonreceived Office communication would have been entered had it been received and docketed must be attached to and referenced in practitioner's statement. A copy of the practitioner's record(s) required to show non-receipt of the Office action should include the master docket for the firm. That is, if a three month period for reply was set in the nonreceived Office action, a copy of the master docket report showing all replies docketed for a date three months from the mail date of the nonreceived Office action must be submitted as documentary proof of nonreceipt of the Office action. If no such master docket exists, the practitioner should so state and provide other evidence such as, but not limited to, the following: the application file jacket; incoming mail log; calendar; reminder system; or the individual docket record for the application in question.
>
> The showing outlined above may not be sufficient if there are circumstances that point to a conclusion that the Office action may have been lost after receipt rather than a conclusion that the Office action was lost in the mail (e.g., if the practitioner has a history of not receiving Office actions).

MPEP 711.03(c)

The MPEP states that "[w]here an attorney or agent of record (or applicant, if he or she is prosecuting the application pro se) changes his or her correspondence address, he or she is responsible for promptly notifying the U.S. Patent and Trademark Office of the new correspondence address (including ZIP Code). See 37 CFR 11.11. The notification should also include his or her telephone number. MPEP 601.03

Review of Office Records

A review of Office records reveal that Applicant filed a Power of Attorney on October 3, 2007, which included a change of correspondence address to customer number 51414.

Thereafter, on November 7, 2007, this Office mailed a Notice of Acceptance of Power of Attorney stating that correspondence in this application would be mailed to the following correspondence address:

GOODWIN PROCTER LLP
PATENT ADMINISTRATOR
EXCHANGE PLACE
BOSTON MA 02109-2881

Applicant subsequently re-filed the Power of Attorney on November 27, 2007, which again included a change of correspondence address to customer number 51414.

On January 23, 2008, the Office action was mailed to the correspondence address of record. The Office action was returned as undeliverable to this Office on January 28, 2008.

Applicant retrieved a copy of the PAIR record for this application which indicate that the Office action was returned to this Office as undelivered by the United States Postal Service (USPS).

The correspondence address of record in the present application has been changed to the following:

GOODWIN PROCTER LLP
PATENT ADMINISTRATOR
53 STATE STREET
EXCHANGE PLACE
BOSTON MA 02109-2881

A review of the correspondence address appearing on the petition reveals that the address thereon is incomplete in that it does not include 53 STATE STREET.

Analysis

Office records reveal that the correspondence address was changed to add "53 State Street." Applicant does not explain this change in the petition, nor does Applicant explain why the Power of Attorney, including the change of correspondence address, was re-filed after this Office

mailed a Notice of Acceptance of Power of Attorney, noting acceptance of the Power of Attorney and acknowledging the correspondence address associated with customer number 51414. Moreover, the petition also does not include "53 State Street" in the correspondence address, but instead mirrors the correspondence address as shown on the Notice of Acceptance of Power of Attorney. The failure to include "53 State Street" in the correspondence address on the petition militates towards a finding that an incorrect/incomplete correspondence address was included in the Power of Attorney filed October 3, 2007, and re-filed on November 27, 2007.

Conclusion

The petition is dismissed without prejudice. Applicant should file a Request for Reconsideration of Petition and

1) state whether the correspondence address of record should include 53 State Street;

2) state whether the customer number address for customer number 51414, filed in the change of correspondence address filed on October 3, 2007, included 53 State Street;

3) state whether the address associated with customer number 51414 has been updated to include 53 State Street, and if so, when;

4) explain why the Power of Attorney was re-filed on November 27, 2007, after this Office mailed the Notice of Acceptance of Power of Attorney stating that correspondence in this application was as follows:

GOODWIN PROCTER LLP
PATENT ADMINISTRATOR
EXCHANGE PLACE
BOSTON MA 02109-2881

Said address did not include 53 State Street.

Alternate venue

Alternatively, Applicant may file a petition stating that the delay was unintentional. Public Law 97-247, § 3, 96 Stat. 317 (1982), which revised patent and trademark fees, amended 35 U.S.C. § 41(a)(7) to provide for the revival of an "unintentionally" abandoned application without a showing that the delay in was "unavoidable." An "unintentional" petition under 37 CFR 1.137(b) must be accompanied by the required fee.

The filing of a petition under 37 CFR 1.137(b) cannot be intentionally delayed and therefore must be filed promptly. A person seeking revival due to unintentional delay can not make a statement that the delay was unintentional unless the entire delay, including the delay from the date it was discovered that the application was abandoned until the filing of the petition to revive under 37 CFR 1.137(b), was unintentional. A statement that the delay was unintentional is not

appropriate if petitioner intentionally delayed the filing of a petition for revive under 37 CFR 1.137(b).

Further correspondence with respect to this matter should be addressed as follows:

By mail:	Director for Patents PO Box 1450 Alexandria, VA 22313-1450
By FAX:	(571) 273-8300 Attn: Office of Petitions
By hand:	Customer Service Window Randolph Building 401 Dulany Street Alexandria, VA 22314

Telephone inquiries concerning this matter should be directed to the undersigned at (571) 272-3232.

/Derek L. Woods/
Derek L. Woods
Attorney
Office of Petitions

UNITED STATES PATENT AND TRADEMARK OFFICE

Commissioner for Patents
United States Patent and Trademark Office
P.O. Box 1450
Alexandria, VA 22313-1450
www.uspto.gov

GOODWIN PROCTER LLP
PATENT ADMINISTRATOR
53 STATE STREET
EXCHANGE PLACE
BOSTON MA 02109-2881

COPY MAILED
JAN 09 2009

In re Application of	:	
Shuber et al.	:	
Application No.: 10/369123	:	DECISION ON
Filing or 371(c) Date: 02/18/2003	:	PETITION
Attorney Docket Number: EXT-059	:	

This is a decision on the Petition for Revival of an Application for Patent Abandoned Unintentionally Under 37 C.F.R. § 1.137(b), filed November 24, 2008.

This Petition is hereby **granted**.

The above-identified application became abandoned for failure to timely reply to the non-final Office action, mailed January 23, 2008. The Office action set a three (3) period for reply. Extensions of time under 37 CFR 1.136(a) were available. No reply having been received, the application became abandoned on April 24, 2008. A Notice of Abandonment was mailed September 22, 2008.

Applicant files the present petition and includes an Amendment in response to the Office action. The petition satisfies the conditions for revival pursuant to the provisions of 37 CFR 1.137(b) in that (1) the reply in the form of an Amendment is filed with the present petition; (2) the petition fee; and (3) the required statement of unintentional delay. Accordingly, the reply is accepted as having been unintentionally delayed.

This application is being referred to Technology Center Art Unit 1637 for processing of the Amendment filed with the petition in due course.

Telephone inquiries concerning this decision should be directed to the undersigned at (571) 272-3232.

/Derek L. Woods/
Derek L. Woods
Attorney
Office of Petitions

SPE RESPONSE FOR CERTIFICATE OF CORRECTION

Paper No.: ——

DATE : 1/26/05

TO SPE OF : ART UNIT 3681

SUBJECT : Request for Certificate of Correction on Patent No.: 6814683 B2

A response is requested with respect to the accompanying request for a certificate of correction.

Please complete this form and return with file, within **7** days to:
Certificates of Correction Branch - PK 3-915
Palm location **7580** - Tel. No. 305-8309

With respect to the change(s) requested, correcting Office and/or Applicant's errors, should the patent read as shown in the certificate of correction? No new matter should be introduced, nor should the scope or meaning of the claims be changed.

Virginia Tolbert

Thank You For Your Assistance

Certificates of Correction Branch

The request for issuing the above-identified correction(s) is hereby:
Note your decision on the appropriate box.

- ☒ **Approved** — All changes apply.
- ☐ **Approved in Part** — Specify below which changes **do not** apply.
- ☐ **Denied** — State the reasons for denial below.

Comments:

All changes OK

DIRK WRIGHT
PRIMARY EXAMINER
ART UNIT 352
3601

C Morris — **SPE**

3681 — **Art Unit**

OIPE IAP15
NOV 2 1 2005
PATENT & TRADEMARK OFFICE

11/10/05
11/10/05

UNITED STATES PATENT AND TRADEMARK OFFICE

COMMISSIONER FOR PATENTS
UNITED STATES PATENT AND TRADEMARK OFFICE
P.O. BOX 1450
ALEXANDRIA, VA 22313-1450
WWW.USPTO.GOV

MAILED
NOV 0 7 2005
TECHNOLOGY CENTER 2100

Paper No. 13

Shayne Short
Garlick Harrison & Markison, L.L.P.
P.O. Box 160727
Austin, TX 78716-0727

In re Application of: Shen, et al.
Application No. 10/369,168
Attorney Docket No. BP 2559
Filed: February 19, 2003
For: LOW DENSITY PARITY CHECK (LDPC) CODE DECODER USING MIN*, MIN**, MAX*, OR MAX** AND THEIR RESPECITIVE INVERSES

DECISION ON PETITION TO WITHDRAW HOLDING OF ABANDONMENT UNDER 37 CFR §1.181

This is a decision on the petition filed August 25, 2005 under 37 CFR §1.181, requesting the Withdrawal of the Holding of Abandonment of the above-identified application. This application was held abandoned for failure to timely pay the issue fee due within the statutory period of three months from the mailing date of the Notice of Allowance and Fee(s) Due (PTOL-85), mailed March 28, 2005. A Notice of Abandonment was mailed on August 16, 2005 (Paper No. 9).

RECENT PROSECUTION HISTORY

1) A (first) Notice of Allowability (PTOL-37) and a (first) Notice of Allowance and Issue Fee(s) Due (PTOL-85) was mailed on July 2, 2004 (Paper No. 6).

2) The issue fee was processed on August 3, 2004 (Issue Fee - $1,330.00, publication fee $300.00, and two patent copies - $6.00).

3) On December 8, 2004, the application was withdrawn from issue under 37 CFR §1.313(b) to determine patentability.

4) On January 5, 2005, an Examiner's amendment, interview summary and a (second) Notice of Allowability were mailed.

5) On March 28, 2005, a (second) Notice of Allowance and Issue Fee(s) Due (PTOL-85) was mailed to Applicant. Note, the indicated Issue Fee Due on this notice is an additional $70.00.

6) On August 16, 2005, a Notice of Abandonment (PTOL-1432) was mailed to Applicant, for failure to timely pay the required issue fee indicated (PTOL-85, mailed March 28, 2005).

(7) On August 25, 2005, the instant petition, change of address and evidence was filed.

In support of the petition, applicants' representative provides a statement that the Notice of Allowance was not received.

According to the MPEP §711.03(c), the showing required to establish **nonreceipt** of an Office action includes the following:

> *1) a statement from practitioner that the Office action was not received;*
> ***2) a statement from practitioner that the file jacket and docket records were searched;***
> ***3) a copy of the docket record at the address of record;*** *and*
> ***4) a reference to the docket record in the practitioner's statement.***
> [Emphasis added.]

The petition fails to fully comply with requirements 2-4 set forth above. The evidence submitted has not overcome the presumption of receipt.

A statement from the practitioner that the file jacket and docket records were searched has not been provided. In addition, a copy of the docket record where the non-received Office communication would have been entered had it been received and docketed, ***must be attached to and referenced in*** practitioner's statement. The docket record identified above is also required to be a docket record showing all actions due by the entire firm at and around the due date for response, not counting any possible extensions of time. The attorney must also have been at the address of record at the time the action was mailed or have filed a timely change of correspondence address.

A change of correspondence address was filed with the USPTO on August 25, 2005 and has been entered into the file (Paper No. 12). Further, the additional evidence in the form of copies of PTOL-85 part B transmittals, post card receipt mailing dated August 2, 2004, and transmittal forms filed with the petition as additional evidence, are acknowledged. Note, the change of address, filed on August 25, 2005, has no bearing on the disposition of this decision.

The (second) Notice of Allowance and Issue Fee(s) Due, mailed March 28, 2005, indicates an additional Issue Fee due in the amount of $70.00 (due to an increase in Issue Fee(s) to $1,400.00 on December 8, 2004, which is after the original date of allowance of July 2, 2004). As a result, the additional (issue fee) amount indicated must be paid prior to issuance of the instant application in addition to completion of the section on form PTOL-85 authorizing the Director of the USPTO to "re-apply any previously paid issue fee to the (instant) application identified above". Upon submission of a renewed petition and subsequent granting of Withdrawal of the holding of Abandonment, the Notice of Allowance and Issue Fee(s) Due, originally mailed March 28, 2005, will be redated and remailed to Applicant.

The petition is **DISMISSED**.

If petitioner desires further review of this decision, petitioner should file a Request for Reconsideration within two (2) months of the mailing date of this decision. Telephone inquiries should be directed to the undersigned at (703) 308-0885.

Brian E. Johnson
Special Programs Examiner
Technology Center 2100
Computer Architecture, Software, and Information Security

UNITED STATES PATENT AND TRADEMARK OFFICE

COMMISSIONER FOR PATENT
UNITED STATES PATENT AND TRADEMARK OFFIC
WASHINGTON, D.C. 20231
www.uspto.go

Paper No. 4

Garlick Harrison & Markison LLP
P.O. Box 160727
Austin, Texas 78716-0727

MAILED

MAY 17 2004

Technology Center 2100

In re Application of: Shen Ba-Zhong et al.	)	
Application No. 10/369,168	)	
Filed: February 19, 2003	)	DECISION ON PETITION TO
For: LOW DENSITY PARITY CHECK	)	MAKE SPECIAL UNDER
(LDPC) CODE DETECTOR USING	)	M.P.E.P. §708.02(II):
MIN*, MIN**, MAX* OR MAX**	)	INFRINGEMENT
AND THEIR RESPECTIVE	)	
INVERSES	)	

This is a decision on the petition, filed April 22, 2004, requesting to make the above-identified application special under 37 C.F.R. §1.102(d) and M.P.E.P. §708.02(II): Infringement.

A grantable petition under 37 C.F.R. §1.102(d), and M.P.E.P. §708.02, Section II, must be accompanied by payment of the fee under 37 C.F.R.§1.117(h) and a statement under 37 C.F.R. §1.102 by the applicant or assignee or statements by an attorney/agent registered to practice before the Patent and Trademark Office that (A) there is an infringing device or product actually on the market or method in use; (B) a rigid comparison of the alleged infringing device, product, or method with the claims of the application has been made, and that, in his or her opinion, some of the claims are unquestionably infringed: and (C) he or she has made or caused to be made a careful and thorough search of the prior art or has a good knowledge of the prior art. Applicant must provide one copy of each of the references deemed most closely related to the subject matter encompassed by the claims.

Applicants' submission meets all the criteria set out above, accordingly, the Petition is **GRANTED**.

The application file is being forwarded to the Examiner of Record for expedited examination.

Pinchus M. Laufer
Special Programs Examiner
Technology Center 2100
Computer Architecture, Software, and Information Security
(703) 306-4160

The Examiner is invited to contact the undersigned by telephone or facsimile if the Examiner believes that such a communication would advance the prosecution of the present patent application.

RESPECTFULLY SUBMITTED,

By: SXShort

Shayne X. Short, Ph.D.
Reg. No. 45,105
Direct Phone: (512) 825-1145
Direct Fax No. (512) 394-0054

GARLICK HARRISON & MARKISON LLP
ATTORNEYS AT LAW
USPTO CN 34399
P.O. BOX 160727
AUSTIN, TEXAS 78716-0727
TELEPHONE (512) 825-1145 / FACSIMILE1 (512) 394-0054 / FACSIMILE2 (512) 264-3735

UNITED STATES PATENT AND TRADEMARK OFFICE

COMMISSIONER FOR PATENTS
UNITED STATES PATENT AND TRADEMARK OFFICE
P.O. BOX 1450
ALEXANDRIA, VA 22313-1450
www.uspto.gov

Paper No. 13

RECEIVED
NOV 07 2005
Technology Center 2100

Shayne Short
Garlick Harrison & Markison, L.L.P.
P.O. Box 160727
Austin, TX 78716-0727

In re Application of: Shen, et al.
Application No. 10/369,168
Attorney Docket No. BP 2559
Filed: February 19, 2003
For: LOW DENSITY PARITY CHECK (LDPC) CODE DECODER USING MIN*, MIN**, MAX*, OR MAX** AND THEIR RESPECITIVE INVERSES

DECISION ON PETITION TO WITHDRAW HOLDING OF ABANDONMENT UNDER 37 CFR §1.181

This is a decision on the petition filed August 25, 2005 under 37 CFR §1.181, requesting the Withdrawal of the Holding of Abandonment of the above-identified application. This application was held abandoned for failure to timely pay the issue fee due within the statutory period of three months from the mailing date of the Notice of Allowance and Fee(s) Due (PTOL-85), mailed March 28, 2005. A Notice of Abandonment was mailed on August 16, 2005 (Paper No. 9).

RECENT PROSECUTION HISTORY

1) A (first) Notice of Allowability (PTOL-37) and a (first) Notice of Allowance and Issue Fee(s) Due (PTOL-85) was mailed on July 2, 2004 (Paper No. 6).

2) The issue fee was processed on August 3, 2004 (Issue Fee - $1,330.00, publication fee $300.00, and two patent copies - $6.00).

3) On December 8, 2004, the application was withdrawn from issue under 37 CFR §1.313(b) to determine patentability.

4) On January 5, 2005, an Examiner's amendment, interview summary and a (second) Notice of Allowability were mailed.

5) On March 28, 2005, a (second) Notice of Allowance and Issue Fee(s) Due (PTOL-85) was mailed to Applicant. Note, the indicated Issue Fee Due on this notice is an additional $70.00.

6) On August 16, 2005, a Notice of Abandonment (PTOL-1432) was mailed to Applicant, for failure to timely pay the required issue fee indicated (PTOL-85, mailed March 28, 2005).

(7) On August 25, 2005, the instant petition, change of address and evidence was filed.

In support of the petition, applicants' representative provides a statement that the Notice of Allowance was not received.

According to the MPEP §711.03(c), the showing required to establish **nonreceipt** of an Office action includes the following:

> *1) a statement from practitioner that the Office action was not received;*
> ***2) a statement from practitioner that the file jacket and docket records were searched;***
> ***3) a copy of the docket record at the address of record;*** *and*
> ***4) a reference to the docket record in the practitioner's statement.***
> [Emphasis added.]

The petition fails to fully comply with requirements 2-4 set forth above. The evidence submitted has not overcome the presumption of receipt.

A statement from the practitioner that the file jacket and docket records were searched has not been provided. In addition, a copy of the docket record where the non-received Office communication would have been entered had it been received and docketed, ***must be attached to and referenced in*** practitioner's statement. The docket record identified above is also required to be a docket record showing all actions due by the entire firm at and around the due date for response, not counting any possible extensions of time. The attorney must also have been at the address of record at the time the action was mailed or have filed a timely change of correspondence address.

A change of correspondence address was filed with the USPTO on August 25, 2005 and has been entered into the file (Paper No. 12). Further, the additional evidence in the form of copies of PTOL-85 part B transmittals, post card receipt mailing dated August 2, 2004, and transmittal forms filed with the petition as additional evidence, are acknowledged. Note, the change of address, filed on August 25, 2005, has no bearing on the disposition of this decision.

The (second) Notice of Allowance and Issue Fee(s) Due, mailed March 28, 2005, indicates an additional Issue Fee due in the amount of $70.00 (due to an increase in Issue Fee(s) to $1,400.00 on December 8, 2004, which is after the original date of allowance of July 2, 2004). As a result, the additional (issue fee) amount indicated must be paid prior to issuance of the instant application in addition to completion of the section on form PTOL-85 authorizing the Director of the USPTO to "re-apply any previously paid issue fee to the (instant) application identified above". Upon submission of a renewed petition and subsequent granting of Withdrawal of the holding of Abandonment, the Notice of Allowance and Issue Fee(s) Due, originally mailed March 28, 2005, will be redated and remailed to Applicant.

The petition is **DISMISSED**.

If petitioner desires further review of this decision, petitioner should file a Request for Reconsideration within two (2) months of the mailing date of this decision. Telephone inquiries should be directed to the undersigned at (703) 308-0885.

Brian L. Johnson
Special Programs Examiner
Technology Center 2100
Computer Architecture, Software, and Information Security

UNITED STATES PATENT AND TRADEMARK OFFICE

OFFICE

Paper No. 14

COPY MAILED

DEC 0 5 2005

Director's Office
Office of Patent Publication

GARLICK HARRISON & MARKISON LLP
P.O. BOX 160727
AUSTIN, TX 78716-0727

In re Application of :
SHEN, BA-ZHONG , et al. :
Application No. 10/369,168 :
Filed: February 19, 2003 :
Attorney's Docket No. BP 2559 :

The Notice Of Rescinded Abandonment mailed November 2, 2005, rescinding the Notice of Abandonment mailed August 16, 2005 is **VACATED.**

The Petition Under 37 C.F.R. §1.181(a) To Withdraw Holding Of Abandonment, received in the USPTO on August 25, 2005 and again submitted via facsimile transmission of October 18, 2005 should have been decided by the deciding official in Art Unit 2133, Technology Center 2100, since it argues non-receipt of an Office action — Notice of Allowance.

A proper decision on petition by the Special Programs Examiner in Technology Center 2100 will be forthcoming.

Thomas E. Hawkins

Thomas E. Hawkins
Paralegal Specialist
Office of the Director
Office of Patent Publications

UNITED STATES PATENT AND TRADEMARK OFFICE

COMMISSIONER FOR PATENTS
UNITED STATES PATENT AND TRADEMARK OFFICE
P.O. BOX 1450
ALEXANDRIA, VA 22313-1450
www.uspto.gov

Paper No. 16

MAILED

JAN 27 2006

TECHNOLOGY CENTER 2100

Shayne Short
Garlick Harrison & Markison, L.L.P.
P.O. Box 160727
Austin, TX 78716-0727

In re Application of: Shen, et al.
Application No. 10/369,168
Attorney Docket No. BP 2559
Filed: February 19, 2003
For: LOW DENSITY PARITY CHECK (LDPC) CODE DECODER USING MIN*, MIN**, MAX*, OR MAX** AND THEIR RESPECTIVE INVERSES

DECISION ON PETITION TO WITHDRAW HOLDING OF ABANDONMENT UNDER 37 CFR §1.181

This is a decision on the renewed petition filed November 21, 2005 under 37 CFR §1.181, requesting the Withdrawal of the Holding of Abandonment of the above-identified application. This application was held abandoned for failure to timely pay the issue fee due within the statutory period of three months from the mailing date of the Notice of Allowance and Fee(s) Due (PTOL-85), mailed March 28, 2005. A Notice of Abandonment was mailed on August 16, 2005 (Paper No. 9). A decision dismissing the original petition to Withdraw the Holding of Abandonment, filed on August 25, 2005, was mailed on November 7, 2005.

According to the MPEP §711.03(c), the showing required to establish nonreceipt of an Office action includes the following:

1) a statement from practitioner that the Office action was not received;
2) a statement from practitioner that the file jacket and docket records were searched;
3) a copy of the docket record at the address of record; and
4) a reference to the docket record in the practitioner's statement.

In support of the renewed petition, Petitioner provides both a statement that the Notice of Allowance was not received, as well as a statement that the file jacket and docket records were searched. Petitioner includes a copy of the docket record at the address of record and references the docket record in the petition.

Accordingly, the petition is **GRANTED**.

Note, the (second) Notice of Allowance and Issue Fee(s) Due, mailed March 28, 2005, indicates an additional Issue Fee due in the amount of $70.00 (due to an increase in Issue Fee(s) to $1,400.00 on December 8, 2004, which is after the original date of allowance of July 2, 2004).

As a result, the additional (issue fee) amount indicated must be paid prior to issuance of the instant application in addition to completion of the section on form PTOL-85 authorizing the Director of the USPTO to "re-apply any previously paid issue fee to the (instant) application identified above".

The application is being forwarded to the Supervisory Legal Instruments Examiner with instructions to **WITHDRAW** the holding of abandonment, restore the instant application to pending status and to **REDATE** and **REMAIL** the Notice of Allowance and Issue Fee(s) Due (PTOL-85), originally mailed March 28, 2005 to Applicant.

Any questions regarding this decision should be directed to Brian Johnson at (571) 272-3595.

Brian L. Johnson
Special Programs Examiner
Technology Center 2100
Computer Architecture, Software, and Information Security

UNITED STATES PATENT AND TRADEMARK OFFICE

COMMISSIONER FOR PATENTS
UNITED STATES PATENT AND TRADEMARK OFFICE
P.O. BOX 1450
ALEXANDRIA, VA 22313-1450
www.uspto.gov

TRASK BRITT
P.O. BOX 2550
SALT LAKE CITY UT 84110

COPY MAILED

MAR 2 0 2007

OFFICE OF PETITIONS

In re Application of	:	
ADAMS	:	
Application No.: 10/369,181	:	DECISION ON PETITION
Filing Date: February 19, 2003	:	UNDER 37 CFR 1.137(B)
Attorney Docket No.: 3000-5234.1US	:	

This is a decision on the petition under 37 CFR 1.137(b), filed December 15, 2006, to revive the above-identified application.

The petition is **GRANTED.**

The above-identified application became abandoned for failure to submit the issue fee and publication fee in a timely manner in reply to the Notice of Allowance mailed September 12, 2006, which set a statutory period for reply of three (3) months. Accordingly, by operation of law, the above-identified application became abandoned on December 12, 2006.

The petition satisfies the conditions for revival pursuant to the provisions of 37 CFR 1.137(b) in that (1) the reply in the form of payment of the issue fee and publication fee; (2) the petition fee; and (3) the required statement of unintentional delay have been received. Accordingly, the payment of the issue fee and publication fee is accepted as having been unintentionally delayed.

This application is being referred to Technology Center AU 2628 for appropriate action, if any, on the amendment pursuant to 37 CFR 1.312(a) filed December 15, 2006.

Telephone inquiries concerning this decision should be directed to the undersigned at (571) 272-3301.

Daniel Stemmer
Legal Examiner
Office of the Deputy Commissioner
for Patent Examination Policy

UNITED STATES PATENT AND TRADEMARK OFFICE

COMMISSIONER FOR PATENTS
UNITED STATES PATENT AND TRADEMARK OFFICE
P.O. BOX 1450
ALEXANDRIA, VA 22313-1450
www.uspto.gov

Paper No. 6

MADSON & METCALF
GATEWAY TOWER WEST
SUITE 900
15 WEST SOUTH TEMPLE
SALT LAKE CITY, UT 84101

COPY MAILED

APR 29 2004

OFFICE OF PETITIONS

In re Application of	:	
Rade et al.	:	GRANT OF PETITION
Application No. 10/369,208	:	UNDER 37 CFR 1.78(a)(3)
Filed: February 19, 2003	:	
Attorney Docket No. 3389.2.3	:	

This is a decision on the petition under 37 CFR 1.78(a)(3), filed September 22, 2003, to accept an unintentionally delayed claim for the benefit of priority based on the prior-filed application set forth in the concurrently filed amendment.

The petition is **granted**.

When an application is filed on or after November 29, 2000, benefit claims under 35 U.S.C. 119(e), 120, 121 and 365(c) must be made during the pendency of the application and within the later of four months from the actual filing date of the application or sixteen months from the filing date of the prior application. For the instant application, the above period of time ended on June 19, 2003. The priority claim at issue was not made by this date. However, petitioner has submitted a petition under 37 CFR 1.78(a)(3).

37 CFR 1.78(a)(3) states,

If the reference required by 35 U.S.C. 120 and paragraph (a)(2) of this section is presented in a nonprovisional application after the time period provided by paragraph (a)(2)(ii) of this section, the claim under 35 U.S.C. 120, 121, or 365(c) for the benefit of a prior-filed copending nonprovisional application or international application designating the United States of America may be accepted if the reference identifying the prior-filed application by application number or international application number and international filing date was unintentionally delayed. A petition to accept an unintentionally delayed claim under 35 U.S.C. 120, 121, or 365(c) for the benefit of a prior-filed application must be accompanied by:

(i) The reference required by 35 U.S.C. 120 and paragraph (a)(2) of this section to the prior-filed application, unless previously submitted;
(ii) The surcharge set forth in § 1.17(t); and
(iii) A statement that the entire delay between the date the claim was due under paragraph (a)(2)(ii) of this section and the date the claim was filed was unintentional. The Commissioner may require additional information where there is a question whether the delay was unintentional.

Petitioner has satisfied the above requirements for relief under 37 CFR 1.78(a)(3).

The granting of this petition is not a determination that petitioner is actually entitled to the benefit of the filing date of the prior-filed application, but is only a determination that the Office will allow petitioner to file an untimely claim for priority. The examiner will, in due course,

consider any priority claims and determine the extent to which the application is entitled to an earlier filing date.

A corrected Filing Receipt, which includes the priority claims, accompanies this decision on petition.

This application is being forwarded to Technology Center Art Unit 3616 for appropriate action on the amendment submitted September 22, 2004, including consideration by the examiner of the claims for priority based on the PCT application and the German application. **The examiner should consider the priority claims and determine the extent to which the application is entitled to an earlier filing date based on the prior-filed applications.**

Telephone inquiries should be directed to Petitions Attorney Steven Brantley at (703) 306-5683.

Charles Pearson
Director
Office of Petitions

Attached: Corrected Filing Receipt

UNITED STATES PATENT AND TRADEMARK OFFICE

Commissioner for Patents
United States Patent and Trademark Office
P.O. Box 1450
Alexandria, VA 22313-1450
www.uspto.gov

CARY TOPE MCKAY
23852 PACIFIC COAST HIGHWAY #311
MALIBU CA 90265

COPY MAILED

NOV 30 2007

OFFICE OF PETITIONS

In re Application of	:	
Michael D. Howard	:	
Application No. 10/369,218	:	DECISION ON
Filed: February 15, 2003	:	PETITION
Attorney Docket No. HRL110	:	

This is in response to the petition to revive under 37 CFR 1.137(b), filed February 20, 2007.

The petition under 37 CFR 1.137(b) is **GRANTED**.

The above application became abandoned for failure to timely submit corrected drawings as required by the Notice of Drawing Inconsistency mailed on October 5, 2006. This Notice set a non extendable period for reply of one month from the mailing date of the Notice, or from the period remaining as set forth in the Notice of Allowability, whichever was longer. As the Notice of Allowability was mailed on August 31, 2006, an no corrected drawings were received, the application became abandoned on December 1, 2006. A Notice of Abandonment was mailed on January 9, 2007.

With the instant petition, petition paid the petition fee, submitted corrected drawings, and made the proper statement of delay.

The application file is being forwarded to the Office of Patent Publication for processing into a patent.

Telephone inquiries related to this decision should be directed to the undersigned at 571-272-3207.

Cliff Congo
Petitions Attorney
Office of Petitions

UNITED STATES PATENT AND TRADEMARK OFFICE

Commissioner for Patents
United States Patent and Trademark Office
P.O. Box 1450
Alexandria, VA 22313-1450
www.uspto.gov

SEED INTELLECTUAL PROPERTY LAW GROUP PLLC
701 FIFTH AVENUE, SUITE 6300
SEATTLE, WA 98104-7092

COPY MAILED

NOV 10 2005

OFFICE OF PETITIONS

In re Application of :
Orest W. Blaschuk et al :
Application No. 10/369,226 :
Filed: February 13, 2003 :
Attorney Docket No. 100086.406C3

ON PETITION

This is a decision on the petition, filed November 4, 2005 under 37 CFR 1.313(c)(2) to withdraw the above-identified application from issue after payment of the issue fee.

The petition is **GRANTED**.

The above-identified application is withdrawn from issue for consideration of a submission under 37 CFR 1.114 (request for continued examination). See 37 CFR 1.313(c)(2).

Petitioner is advised that the issue fee paid on October 13, 2005 in the above-identified application cannot be refunded. If, however, the above-identified application is again allowed, petitioner may request that it be applied towards the issue fee required by the new Notice of Allowance.[1]

Telephone inquiries should be directed to Irvin Dingle at (571) 272-3210.

This matter is being referred to Technology Center AU 1654 for processing of the request for continued examination under 37 CFR 1.114 and for consideration of the concurrently filed Information Disclosure Statement.

Irvin Dingle
Petitions Examiner
Office of Petitions

---

[1] The request to apply the issue fee to the new Notice may be satisfied by completing and returning the new Issue Fee Transmittal Form PTOL-85(b), which includes the following language thereon: Commissioner for Patents is requested to apply the Issue Fee and Publication Fee (if any) or re-apply any previously paid issue fee to the application identified above. Petitioner is advised that, whether a fee is indicated as being due or not, the Issue Fee Transmittal Form **must** be completed and timely submitted to avoid abandonment. Note the language in bold text on the first page of the Notice of Allowance and Fee(s) Due (PTOL-85).

UNITED STATES PATENT AND TRADEMARK OFFICE

Commissioner for Patents
United States Patent and Trademark Office
P.O. Box 1450
Alexandria, VA 22313-1450
www.uspto.gov

Sidney Liberfarb
554 Cesar Ct.
Walnut Creek CA 94598

COPY MAILED

AUG 08 2006

OFFICE OF PETITIONS

In re Application of
Sidney Liberfarb
Application No. 10/369,231
Filed: February 20, 2003
Title: Hoopball

DECISION ON PETITION

This is a decision on the petition filed June 5, 2006, to withdraw the holding of abandonment.

On July 1, 2005, the Office mailed a final Office action, which set a three-month shortened statutory period to reply. On September 24, 2005, petitioner submitted an amendment in response to the final Office action. On October 11, 2005, the examiner mailed an Advisory Action, indicating that the amendment filed on September 24, 2005, did not place the application in condition for allowance. Furthermore, the Advisory Action stated that petitioner could extend the three month shortened statutory period for reply to the final Office action by obtaining an extension of time pursuant to 37 CFR 136(a). On November 4, 2005, petitioner mailed a second reply to the final Office action; however, petitioner did NOT obtain any extensions of time to respond. On April 7, 2006, the Office mailed a Notice of Abandonment, which stated that the application was abandoned because petitioner failed to file a timely and proper reply to the final Office action of July 1, 2005. Additionally, the Notice indicated that the proposed reply received on November 4, 2005, did not constitute a proper reply under 37 CFR 1.113(a) to a final Office rejection. On June 5, 2006, petitioner filed the present petition to withdraw the holding of abandonment in the above-identified application.

In the petition, petitioner argued that his faxed response on November 4, 2005, was a timely and proper reply under 37 CFR 1.113(a) in the form of an amendment that placed the application in condition for allowance.

DISCUSSION

Initially, the Office notes that the reply of November 4, 2005, was not a timely response to the outstanding Office action. Specifically, the final Office action set forth a three month shortened statutory period for reply from the mailing date of July 1, 2005. Petitioner was required to submit a reply on or before October 1, 2005, without any extensions of time. On the other hand, petitioner

could have filed a request to extend the period for response for an additional three months (i.e., to submit a reply on or before January 2, 2006) with the payment of the appropriate extension of time fees. Unfortunately, the record reveals that petitioner submitted his second reply outside of the three-month statutory period for response and did NOT obtain any extensions of that time period. Accordingly, the reply of November 4, 2005, was not timely filed. Moreover, the examiner indicated that the reply of November 4, 2005, was not a proper reply under 37 CFR 1.113(a) to a final Office rejection. For the reasons stated, the reply was not a timely and proper response that placed the application in condition for allowance.

Furthermore, a response to a final Office action may be entered if it places the application in condition for allowance. However, the admission or refusal to admit an amendment after a final rejection will not operate to relieve the application from its condition. Further, the entry of an amendment after a final rejection is not a matter of right.

CONCLUSION

Accordingly, the petition is **dismissed.** The application will remain in its abandoned state until petitioner files a petition to revive the application (accompanied by the appropriate petition fee).

The Office strongly encourages petitioner to file a petition under 37 CFR 1.137(b) on the basis of unintentional delay. The appropriate form (PTOL/SB/64) is enclosed for petitioner's convenience.

A grantable petition under 37 CFR 1.137(b) **must be accompanied by**:

> (1) The required reply to the outstanding final Office action in the form of a notice of appeal (and fee), a request for continued examination (RCE) under §1.114, or the filing of a continuing application.
>
> (2) The petition fee as set forth in 1.17(m) ($750.00 for a small entity);
>
> (3) A statement that the entire delay in filing the required reply from the due date for the reply until the filing of a grantable petition was unintentional.

Petitioner may wish to contact the Inventors Assistance Center (IAC) with any questions regarding the examination process or for further assistance at 800-786-9199 or 571-272-1000 from 8:30 AM to 5:30 PM (EST), Monday through Friday. The IAC provides patent information and services to the public. The IAC is staffed by former Supervisory Patent Examiners and experienced Primary Examiners who answer general questions concerning patent examining policy and procedure.

Further correspondence with respect to this matter should be addressed as follows:

By mail: Mail Stop Petition
Commissioner for Patents
P.O. Box 1450
Alexandria, VA 22313-1450

By FAX: (571) 273-8300
Attn: Office of Petitions

By hand: Customer Service Window
Randolph Building
401 Dulany Street
Alexandria, VA 22314

Telephone inquiries related to this decision should be directed to the undersigned at (571) 272-3211.

C. T. Donnell

Christina Tartera Donnell
Senior Petitions Attorney
Office of Petitions

Enclosure: Form PTOL/SB/64

UNITED STATES PATENT AND TRADEMARK OFFICE

Commissioner for Patents
United States Patent and Trademark Office
P.O. Box 1450
Alexandria, VA 22313-1450
www.uspto.gov

Sidney Liberfarb
554 Cesar Ct.
Walnut Creek CA 94598

COPY MAILED

FEB 2 6 2007

OFFICE OF PETITIONS

In re Application of
Sidney Liberfarb
Application No. 10/369,231
Filed: February 20, 2003
Title: Hoopball

DECISION ON PETITION

This is a decision on the petition under 37 CFR 1.137(b), filed September 5, 2006, to revive the above-identified application.

The petition is **dismissed**.

Any request for reconsideration of this decision must be submitted within TWO (2) MONTHS from the mail date of this decision. Extensions of time under 37 CFR 1.136(a) are permitted. The reconsideration request should include a cover letter entitled "Renewed Petition under 37 CFR 1.137(b)." No additional petition fee is necessary.

On July 1, 2005, the Office mailed a final Office action, which set a three-month shortened statutory period to reply. On September 24, 2005, petitioner submitted an amendment in response to the final Office action. On October 11, 2005, the examiner mailed an Advisory Action, indicating that the amendment filed on September 24, 2005, did not place the application in condition for allowance. Furthermore, the Advisory Action stated that petitioner could extend the three month shortened statutory period for reply to the final Office action by obtaining an extension of time pursuant to 37 CFR 136(a). On November 4, 2005, petitioner mailed a second reply to the final Office action; however, petitioner did NOT obtain any extensions of time to respond. On April 7, 2006, the Office mailed a Notice of Abandonment, which stated that the application was abandoned because petitioner failed to file a timely and proper reply to the final Office action of July 1, 2005. Additionally, the Notice indicated that the proposed reply received on November 4, 2005, did not constitute a proper reply under 37 CFR 1.113(a) to a final Office rejection. On June 5, 2006, petitioner filed a petition to withdraw the holding of abandonment in the above-identified application, which was dismissed by the decision of August 8, 2006.

A grantable petition under 37 CFR 1.137(b) must be accompanied by:

(1) The required reply to the outstanding final Office action in the form of a notice of appeal (and fee), a request for continued examination (RCE) under § 1.114, or the filing of a continuing application.

(2) The petition fee as set forth in 1.17(m) ($750.00 for a small entity);

(3) A statement that the entire delay in filing the required reply from the due date for the reply until the filing of a grantable petition was unintentional.

The present petition lacks item (1).

The Office has not located a reply to the final Office action with the present petition. **Petitioner must submit an appropriate reply with any renewed petition.** In a nonprovisional application abandoned for failure to reply to a final action, the reply required for consideration of a petition to revive must be:

(1) A Notice of Appeal and appeal fee;

(2) An amendment under 37 CFR 1.116 that cancels all the rejected claims or otherwise *prima facie* places the application in condition for allowance;

(3) The filing of an RCE (accompanied by a submission that meets the reply requirements of 37 CFR 1.111 and the requisite fee) under 37 CFR 1.114 for utility or plant applications filed on or after June 8, 1995; or

(4) The filing of a continuing application under 37 CFR 1.53(b).

Petitioner may wish to contact the Inventors Assistance Center (IAC) with any questions regarding the examination process or for further assistance at 800-786-9199 or 571-272-1000 from 8:30 AM to 5:30 PM (EST), Monday through Friday. The IAC provides patent information and services to the public. The IAC is staffed by former Supervisory Patent Examiners and experienced Primary Examiners who answer general questions concerning patent examining policy and procedure.

Further correspondence with respect to this matter should be addressed as follows:

By mail: Mail Stop Petition
Commissioner for Patents
P.O. Box 1450
Alexandria, VA 22313-1450

By FAX: (571) 273-8300
Attn: Office of Petitions

By hand: Customer Service Window
Randolph Building
401 Dulany Street
Alexandria, VA 22314

Telephone inquiries related to this decision should be directed to the undersigned at (571) 272-3211.

C. T. Donnell

Christina Tartera Donnell
Senior Petitions Attorney
Office of Petitions

UNITED STATES PATENT AND TRADEMARK OFFICE

UNITED STATES DEPARTMENT OF COMMERCE
United States Patent and Trademark Office
Address: COMMISSIONER FOR PATENTS
P.O. Box 1450
Alexandria, Virginia 22313-1450
www.uspto.gov

APPLICATION NO.	FILING DATE	FIRST NAMED INVENTOR	ATTORNEY DOCKET NO.	CONFIRMATION NO.
10/369,244	02/18/2003	Frederick H. Miller	3304.2.3	5694

7590 05/06/2005

Frederick H. Miller
2609 West Tyson Street
Tampa, FL 33611

EXAMINER
TRAN, SUSAN T

ART UNIT	PAPER NUMBER
1615	

DATE MAILED: 05/06/2005

Please find below and/or attached an Office communication concerning this application or proceeding.

The request for deferral/suspension of action under 37 CFR 1.103 has been approved.

UNITED STATES PATENT AND TRADEMARK OFFICE

Commissioner for Patents
United States Patent and Trademark Office
P.O. Box 1450
Alexandria, VA 22313-1450
www.uspto.gov

MAY - 5 2005

STEPHEN A. BENT
FOLEY & LARDNER, LLP
3000 K STREET, NW
SUITE 500
WASHINGTON, DC 20007-5101

In re Application of	:
Fred H. MIller	:
Serial No.: 10/369,244	: DEFERRAL OF EXAMINATION
Filed: February 18, 2003	:
Attorney Docket No.: 027668-0101	:

This is in reply to the petition under 37 CFR 1.103(d) to defer action on this application at applicant's request, filed March 24, 2005.

A review of the file history shows that this is an as yet unexamined patent application. Applicants request that action on this application be suspended in accordance with 37 CFR 1.103(d).

> **§ 1.103 Suspension of action by the Office.**
>
> (d) *Deferral of examination.* On request of the applicant, the Office may grant a deferral of examination under the conditions specified in this paragraph for a period not extending beyond three years from the earliest filing date for which a benefit is claimed under title 35, United States Code. A request for deferral of examination under this paragraph must include the publication fee set forth in § 1.18(d) and the processing fee set forth in § 1.17(i). A request for deferral of examination under this paragraph will not be granted unless:
> (1) The application is an original utility or plant application filed under § 1.53(b) or resulting from entry of an international application into the national stage after compliance with § 1.495;
> (2) The applicant has not filed a nonpublication request under § 1.213(a), or has filed a request under § 1.213(b) to rescind a previously filed nonpublication request;
> (3) The application is in condition for publication as provided in § 1.211(c); and
> (4) The Office has not issued either an Office action under 35 U.S.C. 132 or a notice of allowance under 35 U.S.C. 151.

Applicants meet all the criteria set forth above.

The petition is **GRANTED**. Action on this application is deferred until February 18, 2006, unless applicant requests earlier examination.

Should there be any questions with respect to this action, please contact the examiner or William R. Dixon, Jr., by mail addressed to: Director, Technology Center 1600, P. O. BOX 1450, ALEXANDRIA, VA 22313-1450, or by telephone at 571-272-0519 or by facsimile transmission at Office general facsimile number, 571-273-8300.

Bruce M. Kisliuk
Director, Technology Center 1600

UNITED STATES PATENT AND TRADEMARK OFFICE

Commissioner for Patents
United States Patent and Trademark Office
P.O. Box 1450
Alexandria, VA 22313-1450
www.uspto.gov

APR 20 2005

STEPHEN A. BENT
FOLEY & LARDNER, LLP
3000 K STREET, NW
SUITE 500
WASHINGTON, DC 20007-5101

In re Application of	:
Fred H. MIller	:
Serial No.: 10/369,247	: DEFERRAL OF EXAMINATION
Filed: February 18, 2003	:
Attorney Docket No.: 027668-0101	:

This is in reply to the petition under 37 CFR 1.103(d) to defer action on this application at applicant's request, filed March 24, 2005.

A review of the file history shows that this is an as yet unexamined patent application. Applicants request that action on this application be suspended in accordance with 37 CFR 1.103(d).

> **§ 1.103 Suspension of action by the Office.**
>
> (d) *Deferral of examination*. On request of the applicant, the Office may grant a deferral of examination under the conditions specified in this paragraph for a period not extending beyond three years from the earliest filing date for which a benefit is claimed under title 35, United States Code. A request for deferral of examination under this paragraph must include the publication fee set forth in § 1.18(d) and the processing fee set forth in § 1.17(i). A request for deferral of examination under this paragraph will not be granted unless:
> (1) The application is an original utility or plant application filed under § 1.53(b) or resulting from entry of an international application into the national stage after compliance with § 1.495;
> (2) The applicant has not filed a nonpublication request under § 1.213(a), or has filed a request under § 1.213(b) to rescind a previously filed nonpublication request;
> (3) The application is in condition for publication as provided in § 1.211(c); and
> (4) The Office has not issued either an Office action under 35 U.S.C. 132 or a notice of allowance under 35 U.S.C. 151.

Applicants meet all the criteria set forth above.

The petition is **GRANTED**. Action on this application is deferred until February 18, 2006, unless applicant requests earlier examination.

Should there be any questions with respect to this action, please contact the examiner or William R. Dixon, Jr., by mail addressed to: Director, Technology Center 1600, P. O. BOX 1450, ALEXANDRIA, VA 22313-1450, or by telephone at 571-272-0519 or by facsimile transmission at Office general facsimile number, 571-273-8300.

Bruce M. Kisliuk
Director, Technology Center 1600

UNITED STATES PATENT AND TRADEMARK OFFICE

Commissioner for Patents
United States Patent and Trademark Office
P.O. Box 1450
Alexandria, VA 22313-1450
www.uspto.gov
DIW Jan-06

NEIL A. STEINBERG
2665 MARINE WAY, SUITE 1150
MOUNTAIN VIEW CA 94043

COPY MAILED

FEB 13 2006

OFFICE OF PETITIONS

In re Application of	:	
Franklin et al.	:	
Application No. 10/369,257	:	DECISION ON PETITION
Filed: 18 February, 2003	:	
Atty Docket No. JADO-002/05US	:	

This is a decision on the petition filed on 15 September, 2005, under 37 CFR 1.182, requesting acceptance of a power of attorney made on behalf of less than all the named inventors.

The petition is **granted**.

A declaration was filed under 37 CFR 1.63 on 6 November, 2003, naming Jerrold E. Franklin, Eric S. Mettler, Muralidharan P. Arikara, and Lawrence Bawden, Jr. as joint inventors.

On 6 June, 2005, a paper entitled "Power of Attorney by Applicants Arikara and Bawden" granting power of attorney to Neil A. Steinberg, Reg. No. 34,735, and signed by joint inventors Arikara and Bawden was filed. The paper listed the correspondence address for Arikara and Bawden as Neil A. Steinberg, 2665 Marine Way, Suite 1150, Mountain View, CA 94043.

The present petition, signed by registered patent attorneys Steinberg and John P. O'Banion, Reg. No. 33,201, respectively, asserts that a dispute has arisen between the inventors. Petitioners request that powers of attorney to different representatives from inventors Arikara and Bowden and inventors Franklin and Mettler be accepted. Petitioners further state that this application is a "divisional application" of Application No. 09/834,389, in which a petition to accept a power of attorney made on behalf of less than all the named inventors was granted.

At the outset, it is noted that this application is a continuation of Application No. PCT/US01/24105, filed 31 July, 2001, which is a continuation-in-part, rather than a division, of Application No. 09/834,389. Nevertheless, based on the showing of record, the petition may be favorably considered.

In accordance with MPEP 402.10, to assure that all interests are properly and effectively represented, all further correspondence to the U.S. Patent and Trademark Office (USPTO) must be signed by petitioners' representative (Steinberg) as named in the power of attorney filed on 6 June, 2005, and likewise signed by attorney O'Banion on behalf of joint inventors Franklin and Mettler, or any other representative they appoint. Each attorney signing subsequent papers must indicate whom he or she presents.

In view of applicant's request that papers be sent to Steinberg, Steinberg will continue to be listed as the correspondence address. **All parties are reminded that dual correspondence is not permitted and will not be undertaken by the USPTO.**

It is noted that, notwithstanding this decision, the inventors may still **jointly** appoint or revoke a power of attorney.

The petition fee required under 37 CFR 1.182 will be assessed to Deposit Account No. 50-0763 as authorized in the fee transmittal filed with the amendment on 23 September, 2005, signed by attorney Steinberg.

It is further noted that petitioners have not supplied an oath or declaration in compliance with 37 CFR 1.63, as required by the Notice of Informal Application mailed on 9 December, 2003.

The application is being forwarded to Technology Center 1700 for further processing.

Telephone inquiries concerning this matter may be directed to the undersigned at (571) 272-3231.

D Wood

Douglas I. Wood
Senior Petitions Attorney
Office of Petitions

UNITED STATES PATENT AND TRADEMARK OFFICE

Commissioner for Patents
United States Patent and Trademark Office
P.O. Box 1450
Alexandria, VA 22313-1450
www.uspto.gov
DW Feb-06

NEIL A. STEINBERG
2665 MARINE WAY, SUITE 1150
MOUNTAIN VIEW CA 94043

COPY MAILED

FEB 1 3 2006

OFFICE OF PETITIONS

In re Application of	:	
Franklin et al.	:	
Application No. 10/369,257	:	DECISION ON PETITION
Filed: 18 February, 2003	:	
Atty Docket No. JADO-002/05US	:	

This is a decision on the petition filed on 15 September, 2005, under 37 CFR 1.182, requesting acceptance of a power of attorney made on behalf of less than all the named inventors.

The petition is **granted**.

A declaration was filed under 37 CFR 1.63 on 6 November, 2003, naming Jerrold E. Franklin, Eric S. Mettler, Muralidharan P. Arikara, and Lawrence Bawden, Jr. as joint inventors.

On 6 June, 2005, a paper entitled "Power of Attorney by Applicants Arikara and Bawden" granting power of attorney to Neil A. Steinberg, Reg. No. 34,735, and signed by joint inventors Arikara and Bawden was filed. The paper listed the correspondence address for Arikara and Bawden as Neil A. Steinberg, 2665 Marine Way, Suite 1150, Mountain View, CA 94043.

The present petition, signed by registered patent attorneys Steinberg and John P. O'Banion, Reg. No. 33,201, respectively, asserts that a dispute has arisen between the inventors. Petitioners request that powers of attorney to different representatives from inventors Arikara and Bowden and inventors Franklin and Mettler be accepted. Petitioners further state that this application is a "divisional application" of Application No. 09/834,389, in which a petition to accept a power of attorney made on behalf of less than all the named inventors was granted.

At the outset, it is noted that this application is a continuation of Application No. PCT/US01/24105, filed 31 July, 2001, which is a continuation-in-part, rather than a division, of Application No. 09/834,389. Nevertheless, based on the showing of record, the petition may be favorably considered.

In accordance with MPEP 402.10, to assure that all interests are properly and effectively represented, all further correspondence to the U.S. Patent and Trademark Office (USPTO) must be signed by petitioners' representative (Steinberg) as named in the power of attorney filed on 6 June, 2005, and likewise signed by attorney O'Banion on behalf of joint inventors Franklin and Mettler, or any other representative they appoint. Each attorney signing subsequent papers must indicate whom he or she presents.

In view of applicant's request that papers be sent to Steinberg, Steinberg will continue to be listed as the correspondence address. **All parties are reminded that dual correspondence is not permitted and will not be undertaken by the USPTO.**

It is noted that, notwithstanding this decision, the inventors may still **jointly** appoint or revoke a power of attorney.

The petition fee required under 37 CFR 1.182 will be assessed to Deposit Account No. 50-0763 as authorized in the fee transmittal filed with the amendment on 23 September, 2005, signed by attorney Steinberg.

It is further noted that petitioners have not supplied an oath or declaration in compliance with 37 CFR 1.63, as required by the Notice of Informal Application mailed on 9 December, 2003.

The application is being forwarded to Technology Center 1700 for further processing.

Telephone inquiries concerning this matter may be directed to the undersigned at (571) 272-3231.

D Wood

Douglas I. Wood
Senior Petitions Attorney
Office of Petitions

UNITED STATES PATENT AND TRADEMARK OFFICE

COMMISSIONER FOR PATENTS
UNITED STATES PATENT AND TRADEMARK OFFICE
P.O. BOX 1450
ALEXANDRIA, VA 22313-1450
www.uspto.gov

Paper No. 5

KOLISCH HARTWELL, P.C.
520 S.W. YAMHILL STREET
SUITE 200
PORTLAND, OR 97204

COPY MAILED
FEB 26 2004
OFFICE OF PETITIONS

In re Application of	:
Pandya, et al.	: DECISION GRANTING
Application No. 10/369,259	: STATUS UNDER 37 CFR 1.47(a)
Filed: February 18, 2003	:
Atty. Dkt. No.: Cen 302	:
For: SOFTWARE, SYSTEMS AND	:
METHODS FOR MANAGING A	:
DISTRIBUTED NETWORK	:

This is a decision in response to a petition under 37 CFR 1.47(a) filed August 25, 2003.

The petition is **GRANTED**.

Petitioner has shown that inventor Varad Joshi has refused to execute the declaration for the above-identified application after having been presented with the application papers.

The above-identified application and papers have been reviewed and found in compliance with 37 CFR 1.47(a). This application is hereby accorded Rule 1.47(a) status.

As provided in Rule 1.47(c), this Office will forward notice of this application's filing to the non-signing inventors at the addresses given in the petition. Notice of the filing of this application will also be published in the Official Gazette.

After this decision is mailed, the above-identified application will be returned to the Office of Initial Patent Examination for further processing.

Telephone inquiries regarding this decision should be directed to the undersigned at (703) 305-0310.

Alesia M. Brown
Senior Petitions Attorney
Office of Petitions

UNITED STATES PATENT AND TRADEMARK OFFICE

COMMISSIONER FOR PATENTS
UNITED STATES PATENT AND TRADEMARK OFFICE
P.O. BOX 1450
ALEXANDRIA, VA 22313-1450
www.uspto.gov

VARAD JOSHI
13730 S.W. NORTHVIEW DRIVE
TIGARD, OREGON 97223

COPY MAILED
FEB 26 2004
OFFICE OF PETITIONS

In re Application of	:	
Pandya, et al.	:	
Application No.: 10/369,259	:	LETTER
Filed: February 18, 2003	:	
Atty. Dkt. No.: CEN 302	:	
For: SOFTWARE, SYSTEMS AND	:	
METHODS FOR MANAGING A	:	
DISTRIBUTED NETWORK	:	

Dear Sir:

You are named as an inventor in the above-identified United States patent application filed under the provisions of 35 U.S.C. 116 (United States Code) and 37 C.F.R. § 1.47(a), Rules of Practice in Patent Cases. Should a patent be granted on the application you will be designated therein as a joint inventor.

As a named inventor you are entitled to inspect any paper in the file wrapper of the application, order copies of all or any part thereof (at a prepaid cost as per 37 C.F.R. § 1.19) or make your position of record in the application. Alternatively, you may arrange to do any of the preceding through a registered patent attorney or agent presenting written authorization from you. If you care to join the application, counsel of record (see below) would presumably assist you. Joining in the application would entail the filing of an appropriate oath or declaration by you pursuant to 37 C.F.R. § 1.63.

Telephone inquiries regarding this communication should be directed to the undersigned at (703) 305-0310. Requests for information regarding your application should be directed to the File Information Unit at (703) 308-2733. Information regarding how to pay for and order a copy of the application, or a specific paper in the application, should be directed to Certification Division at (703) 308-9726 or 1-800-972-6382 (outside the Washington D.C. area).

Telephone inquiries regarding this matter should be directed to the undersigned at (703) 305-0310.

Alesia M. Brown
Senior Petitions Attorney
Office of Petitions

UNITED STATES PATENT AND TRADEMARK OFFICE

Commissioner for Patents
United States Patent and Trademark Office
P.O. Box 1450
Alexandria, VA 22313-1450
www.uspto.gov

DANIEL R. GROPPER, P.C.
9908 DALE RIDGE CT.
VIENNA, VA 22181

COPY MAILED

NOV 1 0 2008

OFFICE OF PETITIONS

In re Application of	:	
Sandland et al.	:	
Application No. 10/369,268	:	DECISION ON PETITION
Filed: February 14, 2003	:	
Attorney Docket No. None	:	

This is a decision on the petition under the unintentional provisions of 37 CFR 1.137(b), filed September 30, 2008, to revive the above-identified application.

There is no indication that the petition is signed by a registered patent attorney or patent agent of record. However, in accordance with 37 CFR 1.34, the signature of Mr. James E. Ledbetter appearing on the correspondence shall constitute a representation to the United States Patent and Trademark Office that he is authorized to represent the particular party in whose behalf he acts. If, Mr. Ledbetter desires to receive correspondence regarding this file, the appropriate power of attorney documents must be submitted. A courtesy copy of this decision is being mailed to Mr. Ledbetter, the petitioner herein. However, until otherwise instructed, all future correspondence regarding this application file will be directed solely to the above-noted correspondence address of record.

The petition is **GRANTED**.

The application became abandoned for failure to reply in a timely manner to the non-final Office action mailed, September 6, 2007, which set a shortened statutory period for reply of three (3) months. No extensions of time under the provisions of 37 CFR 1.136(a) were obtained. Accordingly, the application became abandoned on December 7, 2007. A Notice of Abandonment was mailed August 21, 2008.

It is not apparent whether the statement of unintentional delay was signed by a person who would have been in a position of knowing that the entire delay in filing the required reply from the due date for the reply until the filing of a grantable petition pursuant to 37 CFR 1.137(b) was unintentional. Nevertheless, in accordance with 37 CFR 10.18, the statement is accepted as constituting a certification of unintentional delay. However, in the event that petitioner has no knowledge that the delay was unintentional, petitioner must make such an inquiry to ascertain that, in fact, the delay was unintentional. If petitioner discovers that the delay was intentional, petitioner must notify the Office.

The petition satisfies the requirements of 37 CFR 1.137(b) in that petitioner has supplied (1) the reply in the form of an amendment, (2) the petition fee of $770, and (3) an adequate statement of unintentional delay.

Telephone inquiries concerning this decision should be directed to Alicia Kelley at (571)272-6059.

This application is being referred to Technology Center 2194 for further examination on the merits.

/SDB/

Sherry D. Brinkley
Petitions Examiner
Office of Petitions

cc: JAMES LEDBETTER
DICKINSON WRIGHT PLLC
1901 L STREET, NW
SUITE 800
WASHINGTON, DC 20036-3506

UNITED STATES PATENT AND TRADEMARK OFFICE

Commissioner for Patents
United States Patent and Trademark Office
P.O. Box 1450
Alexandria, VA 22313-1450
www.uspto.gov

JOHN S. PRATT, ESQ
KILPATRICK STOCKTON, LLP
1100 PEACHTREE STREET
ATLANTA, GA 30309

COPY MAILED

MAR 2 9 2007

OFFICE OF PETITIONS

In re Application of	:	
Charles Roland Wolf, et. al.	:	
Application No. 10/369,289	:	DECISION ON PETITION
Filed: February 18, 2003	:	UNDER 37 CFR 1.55(c)
Attorney Docket No. 57544-334487	:	

This is a decision on the petition under 37 CFR 1.55(c), filed by facsimile transmission on January 11, 2007, to accept an unintentionally delayed claim under 35 U.S.C. § 119(a)-(d) for the benefit of priority to foreign Great Britain Application No. 9615032.1, filed July 17, 1996.

The petition is **GRANTED**.

This pending nonprovisional application was filed after November 29, 2000, and did not include a reference to the foreign application, for which benefit is now sought, within the later of four months from the actual filing date of the application or sixteen months from the filing date of the prior foreign application. Since the claim for priority is submitted after the period specified in 37 CFR 1.55(a)(1)(i), this is an appropriate petition under the provisions of 37 CFR 1.55(c).

A petition under 37 CFR 1.55(c) to accept an unintentionally delayed claim for priority requires:

(1) The nonprovisional application claiming the benefit of an earlier filing date must be filed on or after November 29, 2000;

(2) the claim submitted with the petition must identify the prior foreign application for which priority is claimed, as well as any foreign application for the same subject matter and having a filing date before that of the application for which priority is claimed, by the application number, country, and the filing date and be included either in an oath or declaration (37 CFR 1.63(c)(2)) or in an Application Data Sheet (37 CFR 1.76(b)(6);

(3) the surcharge as set forth in 37 CFR 1.17(t);

(4) a statement that the entire delay between the date the claim was due under 37 CFR 1.55(a)(1) and the date the claim was filed was unintentional (the Director may require additional information where there is a question whether the delay was unintentional); and

(5) the above-identified nonprovisional application must be filed within 12 months of the filing date of the foreign application.

All of the above requirements having been satisfied, the late claim for priority under 35 U.S.C. § 119(a)-(d) is accepted as being unintentionally delayed.

The granting of the petition to accept the delayed benefit claim to the prior-filed application under 37 CFR 1.55(c) should not be construed as meaning that this application is entitled to the benefit of the prior-filed application. In order for this application to be entitled to the benefit of the prior-filed application, all other requirements under 35 U.S.C. § 119(a)-(d) and 37 CFR 1.55(a)(1) must be met. Similarly, the fact that the corrected Filing Receipt accompanying this decision on petition includes the prior-filed application should not be construed as meaning that applicant is entitled to the claim for benefit of priority to the prior-filed application noted thereon. Accordingly, the examiner will, in due course, consider this benefit claim and determine whether this application is entitled to the benefit of the earlier filing date.

A corrected Filing Receipt, which includes the priority claim to the prior-filed foreign application, accompanies this decision on petition.

This application is being referred to Technology Center AU 1652, for examination in due course and for consideration by the examiner of record of the foreign priority claim under 35 U.S.C. § 119(a)-(d).

Any inquiries directly pertaining to this matter may be directed to Andrea Smith at (571) 272-3226.

Frances Hicks

Frances Hicks
Petitions Examiner
Office of Petitions

ATTACHMENT: Corrected Filing Receipt

UNITED STATES PATENT AND TRADEMARK OFFICE

UNITED STATES DEPARTMENT OF COMMERCE
United States Patent and Trademark Office
Address: COMMISSIONER FOR PATENTS
P.O. Box 1450
Alexandria, Virginia 22313-1450
www.uspto.gov

APPL NO.	FILING OR 371(c) DATE	ART UNIT	FIL FEE REC'D	ATTY.DOCKET NO	TOT CLMS	IND CLMS
10/369,289	02/18/2003	1652	475	57544-334487	12	2

CONFIRMATION NO. 6943

CORRECTED FILING RECEIPT

OC000000023138930

23370
JOHN S. PRATT, ESQ
KILPATRICK STOCKTON, LLP
1100 PEACHTREE STREET
ATLANTA, GA 30309

Date Mailed: 03/28/2007

Receipt is acknowledged of this regular Patent Application. It will be considered in its order and you will be notified as to the results of the examination. Be sure to provide the U.S. APPLICATION NUMBER, FILING DATE, NAME OF APPLICANT, and TITLE OF INVENTION when inquiring about this application. Fees transmitted by check or draft are subject to collection. Please verify the accuracy of the data presented on this receipt. **If an error is noted on this Filing Receipt, please mail to the Commissioner for Patents P.O. Box 1450 Alexandria Va 22313-1450. Please provide a copy of this Filing Receipt with the changes noted thereon. If you received a "Notice to File Missing Parts" for this application, please submit any corrections to this Filing Receipt with your reply to the Notice. When the USPTO processes the reply to the Notice, the USPTO will generate another Filing Receipt incorporating the requested corrections (if appropriate).**

Applicant(s)

Charles Roland Wolf, Perth, UNITED KINGDOM;
Thomas Herbert Friedberg, Blairgowrie, UNITED KINGDOM;
Michael Patrick Pritchard, Dundee, UNITED KINGDOM;

Power of Attorney:

Mary Merchant--39771

Domestic Priority data as claimed by applicant

This application is a DIV of 09/230,233 05/17/1999 PAT 6,566,108
which is a 371 of PCT/GB97/01917 07/17/1997

Foreign Applications

UNITED KINGDOM 9615032.1 07/17/1996

If Required, Foreign Filing License Granted: 04/24/2003

The country code and number of your priority application, to be used for filing abroad under the Paris Convention, is US10/369,289

Projected Publication Date: Not Applicable

Non-Publication Request: No

Early Publication Request: No

** SMALL ENTITY **

Title

EXPRESSION OF FUNCTIONAL CYTOCHOROME P450 MONOOXYGENASE SYSTEM IN ENTEROBACTERIA

Preliminary Class

435

PROTECTING YOUR INVENTION OUTSIDE THE UNITED STATES

Since the rights granted by a U.S. patent extend only throughout the territory of the United States and have no effect in a foreign country, an inventor who wishes patent protection in another country must apply for a patent in a specific country or in regional patent offices. Applicants may wish to consider the filing of an international application under the Patent Cooperation Treaty (PCT). An international (PCT) application generally has the same effect as a regular national patent application in each PCT-member country. The PCT process **simplifies** the filing of patent applications on the same invention in member countries, but **does not result** in a grant of "an international patent" and does not eliminate the need of applicants to file additional documents and fees in countries where patent protection is desired.

Almost every country has its own patent law, and a person desiring a patent in a particular country must make an application for patent in that country in accordance with its particular laws. Since the laws of many countries differ in various respects from the patent law of the United States, applicants are advised to seek guidance from specific foreign countries to ensure that patent rights are not lost prematurely.

Applicants also are advised that in the case of inventions made in the United States, the Director of the USPTO must issue a license before applicants can apply for a patent in a foreign country. The filing of a U.S. patent application serves as a request for a foreign filing license. The application's filing receipt contains further information and guidance as to the status of applicant's license for foreign filing.

Applicants may wish to consult the USPTO booklet, "General Information Concerning Patents" (specifically, the section entitled "Treaties and Foreign Patents") for more information on timeframes and deadlines for filing foreign patent applications. The guide is available either by contacting the USPTO Contact Center at 800-786-9199, or it can be viewed on the USPTO website at http://www.uspto.gov/web/offices/pac/doc/general/index.html.

For information on preventing theft of your intellectual property (patents, trademarks and copyrights), you may wish to consult the U.S. Government website, http://www.stopfakes.gov. Part of a Department of Commerce initiative, this website includes self-help "toolkits" giving innovators guidance on how to protect intellectual property in specific countries such as China, Korea and Mexico. For questions regarding patent enforcement issues, applicants may call the U.S. Government hotline at 1-866-999-HALT (1-866-999-4158).

LICENSE FOR FOREIGN FILING UNDER
Title 35, United States Code, Section 184
Title 37, Code of Federal Regulations, 5.11 & 5.15

GRANTED

The applicant has been granted a license under 35 U.S.C. 184, if the phrase "IF REQUIRED, FOREIGN FILING LICENSE GRANTED" followed by a date appears on this form. Such licenses are issued in all applications where the conditions for issuance of a license have been met, regardless of whether or not a license may be required as set forth in 37 CFR 5.15. The scope and limitations of this license are set forth in 37 CFR 5.15(a) unless an earlier license has been issued under 37 CFR 5.15(b). The license is subject to revocation upon written notification. The date indicated is the effective date of the license, unless an earlier license of similar scope has been granted under 37 CFR 5.13 or 5.14.

This license is to be retained by the licensee and may be used at any time on or after the effective date thereof unless it is revoked. This license is automatically transferred to any related applications(s) filed under 37 CFR 1.53(d). This license is not retroactive.

The grant of a license does not in any way lessen the responsibility of a licensee for the security of the subject matter as imposed by any Government contract or the provisions of existing laws relating to espionage and the national security or the export of technical data. Licensees should apprise themselves of current regulations especially with respect to certain countries, of other agencies, particularly the Office of Defense Trade Controls, Department of State (with respect to Arms, Munitions and Implements of War (22 CFR 121-128)); the Bureau of Industry and Security, Department of Commerce (15 CFR parts 730-774); the Office of Foreign Assets Control, Department of Treasury (31 CFR Parts 500+) and the Department of Energy.

NOT GRANTED

No license under 35 U.S.C. 184 has been granted at this time, if the phrase "IF REQUIRED, FOREIGN FILING LICENSE GRANTED" DOES NOT appear on this form. Applicant may still petition for a license under 37 CFR 5.12, if a license is desired before the expiration of 6 months from the filing date of the application. If 6 months has lapsed from the filing date of this application and the licensee has not received any indication of a secrecy order under 35 U.S.C. 181, the licensee may foreign file the application pursuant to 37 CFR 5.15(b).

UNITED STATES PATENT AND TRADEMARK OFFICE

Commissioner for Patents
United States Patent and Trademark Office
P.O. Box 1450
Alexandria, VA22313-1450
www.uspto.gov

FOLEY AND LARDNER LLP
SUITE 500
3000 K STREET NW
WASHINGTON DC 20007

COPY MAILED

NOV 2 3 2007

OFFICE OF PETITIONS

In re Application of
Kenneth Tucker et al.
Application No. 10/369,299
Filed: February 19, 2003
Atty. Dkt. No.: 069748-0205

: DECISION ON APPLICATION FOR
: PATENT TERM ADJUSTMENT

This is a decision on the "REQUEST FOR RECONSIDERATION OF PATENT TERM ADJUSTMENT", filed January 18, 2007. Applicants request that the initial determination of patent term adjustment under 35 U.S.C. 154(b) be corrected from nine (9) days to fourteen (14) days.

The request for correction of the initial determination of patent term adjustment (PTA) is GRANTED. The determination of PTA at the time of the mailing of the Notice of Allowance is fourteen (14) days.

The Office has updated the PAIR screen to reflect that the correct Patent Term Adjustment determination at the time of the mailing of the Notice of Allowance is fourteen (14) days. A copy of the updated PAIR screen, showing the correct determination, is enclosed.

On November 1, 2006, the Office mailed the Determination of Patent Term Adjustment under 35 U.S.C. §154(b) in the above-identified application. The Notice stated that the patent term adjustment to date is nine (9) days.

The Office initially determined a patent term adjustment of nine (9) days based on an adjustment for PTO delay of two hundred twenty-eight (228) days, pursuant to 35 U.S.C. 154(b)(1)(A)(I) and 37 CFR §§1.702(a)(1) and 1.703(a)(1) and reduced by two hundred nineteen days (219) days of applicant delay pursuant to 37 C.F.R. §1.704(b).

Applicant argues that they are eligible for five additional days of Patent Term Adjustment for Office delay in mailing a response within four months of applicant's response filed November 9, 2005 pursuant to 37 CFR §§ 1.702(a)(2) and 1.703(a)(2).

The record supports a conclusion that the patent issuing from this application is not subject to a terminal disclaimer.

Applicant is correct. 37 CFR § 1.702(a)(2) provides:

Grounds for adjustment of patent term due to examination delay under the Patent Term Guarantee Act of 1999 (original applications, other than designs, filed on or after May 29, 2000).
(a) Failure to take certain actions within specified time frames . Subject to the provisions of 35 U.S.C. 154(b) and this subpart, the term of an original patent shall be adjusted if the issuance of the patent was delayed due to the failure of the Office to:
...

(2) Respond to a reply under 35 U.S.C. 132 or to an appeal taken under 35 U.S.C. 134 not later than four months after the date on which the reply was filed or the appeal was taken;

The Office mailed a Notice of Informal or Non-Responsive Amendment on March 14, 2006, five days over the four month period for response which was March 9, 2005.

In view thereof, the correct determination of PTA at the time of the mailing of the Notice of Allowance is fourteen (14) days (233 (228 + 5) days of PTO delay, reduced by 219 (127 + 92) days of Applicant delay).

The Office acknowledges submission of the $200.00 fee set forth in 37 CFR 1.18(e). No additional fees are required.

The application file is being forwarded to the Office of Patent Publication for processing into a patent.

Telephone inquiries specific to this letter should be directed to Senior Petitions Attorney Patricia Faison-Ball at (571) 272-3212.

Kery Fries
for

Nancy Johnson
Senior Petitions Attorney
Office of Petitions

Enclosure: Copy of adjusted PAIR calculation

Day : Wednesday

Date: 11/21/2007

Time: 13:02:24

PALM INTRANET

PTA Calculations for Application: 10/369299			
Application Filing Date:	02/19/2003	PTO Delay (PTO):	228
Issue Date of Patent:		Three Years:	0
Pre-Issue Petitions:	0	Applicant Delay (APPL):	219
Post-Issue Petitions:	0	Total PTA (days):	14
PTO Delay Adjustment:	5		

File Contents History

Number	Date	Contents Description	PTO	APPL	START
68	11/21/2007	ADJUSTMENT OF PTA CALCULATION BY PTO	5		
56	11/01/2006	MAIL NOTICE OF ALLOWANCE			
55	10/30/2006	NOTICE OF ALLOWANCE DATA VERIFICATION COMPLETED			
54	10/27/2006	NOTICE OF ALLOWABILITY			
53	09/22/2006	DATE FORWARDED TO EXAMINER			
52	09/15/2006	AMENDMENT AFTER FINAL REJECTION			
51	08/11/2006	CORRESPONDENCE ADDRESS CHANGE			
50	08/11/2006	CHANGE IN POWER OF ATTORNEY (MAY INCLUDE ASSOCIATE POA)			
49	06/15/2006	MAIL FINAL REJECTION (PTOL - 326)			
48	06/12/2006	FINAL REJECTION			
47	03/23/2006	DATE FORWARDED TO EXAMINER			
46	03/16/2006	RESPONSE AFTER NON-FINAL ACTION		127	43
45	03/14/2006	MAIL NOTICE OF INFORMAL OR NON-RESPONSIVE AMENDMENT			
44	01/17/2006	DATE FORWARDED TO EXAMINER			
43.1	11/09/2005	INFORMAL OR NON-RESPONSIVE AMENDMENT AFTER EXAMINER ACTION			
43	11/09/2005	RESPONSE AFTER NON-FINAL ACTION		92	38
42	11/09/2005	REQUEST FOR EXTENSION OF TIME - GRANTED			
41	12/02/2005	IFW TSS PROCESSING BY TECH CENTER COMPLETE			
40	10/19/2005	CORRESPONDENCE ADDRESS CHANGE			
39	10/19/2005	CHANGE IN POWER OF ATTORNEY (MAY INCLUDE ASSOCIATE POA)			

38	05/09/2005	MAIL NON-FINAL REJECTION			
37	05/03/2005	NON-FINAL REJECTION			
36	02/15/2005	DATE FORWARDED TO EXAMINER			
35	01/24/2005	RESPONSE TO ELECTION / RESTRICTION FILED			
34	01/24/2005	REQUEST FOR EXTENSION OF TIME - GRANTED			
33	02/19/2003	REFERENCE CAPTURE ON IDS			
32	12/03/2004	MAIL RESTRICTION REQUIREMENT	228		-1
31	11/29/2004	REQUIREMENT FOR RESTRICTION / ELECTION			
30	07/16/2004	CORRESPONDENCE ADDRESS CHANGE			
29	07/16/2004	CHANGE IN POWER OF ATTORNEY (MAY INCLUDE ASSOCIATE POA)			
27	12/29/2003	CASE DOCKETED TO EXAMINER IN GAU			
26	02/19/2003	INFORMATION DISCLOSURE STATEMENT (IDS) FILED			
25	02/19/2003	PRELIMINARY AMENDMENT			
24	02/19/2003	PRELIMINARY AMENDMENT			
23	09/15/2003	APPLICATION RETURN FROM OIPE			
22	09/15/2003	APPLICATION IS NOW COMPLETE			
21	09/15/2003	PRE-EXAM OFFICE ACTION WITHDRAWN			
20	09/15/2003	APPLICATION RETURN TO OIPE			
19	09/12/2003	APPLICATION RETURN FROM OIPE			
18	09/15/2003	APPLICATION IS NOW COMPLETE			
17	09/12/2003	APPLICATION RETURN TO OIPE			
16	09/12/2003	APPLICATION DISPATCHED FROM OIPE			
15	09/15/2003	APPLICATION IS NOW COMPLETE			
14	02/19/2003	CLAIM PRELIMINARY AMENDMENT			
13	02/19/2003	DRAWING PRELIMINARY AMENDMENT			
12	02/19/2003	A DOCUMENT THAT CONTAINS, AT LEAST IN PART, A WRITTEN DESCRIPTION OF AN INVENTION, AND OF THE MANNE			
11	07/08/2003	ADDITIONAL APPLICATION FILING FEES			
10	07/08/2003	APPLICANT HAS SUBMITTED NEW DRAWINGS TO CORRECT CORRECTED PAPERS PROBLEMS			
9	04/30/2003	CORRECTED PAPER			
6	04/15/2003	CLEARED BY L&R (LARS)			
5	04/12/2003	IFW SCAN & PACR AUTO SECURITY REVIEW			
4	03/06/2003	IFW SCAN & PACR AUTO SECURITY REVIEW			
3	03/03/2003	CRF IS GOOD TECHNICALLY / ENTERED INTO			

		DATABASE			
2	02/19/2003	CRF DISK HAS BEEN RECEIVED BY PREEXAM / GROUP / PCT			
1	02/19/2003	INITIAL EXAM TEAM NN			

Search Another: Application# [ ] Search

EXPLANATION OF PTA CALCULATION

EXPLANATION OF PTE CALCULATION

To go back use Back button on your browser toolbar.

Back to PALM | ASSIGNMENT | OASIS | Home page

#3

CERTIFICATION OF FACSIMILE TRANSMISSION UNDER 37 C.F.R. 1.8(a)

I hereby certify that this paper is being filed with the United States Patent and Trademark Office by facsimile transmission on Jun 10, 2003 to facsimile telephone number 703-746-7239

Robert Gingher 45,755
(Reg. No.)

IN THE UNITED STATES PATENT AND TRADEMARK OFFICE

Official

Application of:	Oesterreicher et al.	Confirmation No.:	5568
Serial No.:	10/369,305	Art Unit:	2152
Filed:	February 19, 2003	Examiner:	TBA
For:	Hybrid Streaming Platform	Attorney Docket No:	11055-005

RECEIVED 6-10-03

RESCISSION OF NON-PUBLICATION REQUEST AND PETITION UNDER RULE 181

Commissioner for Patents
P.O. Box 1450
Alexandria, VA 22313-1450

Sir:

Applicants hereby rescind their non-publication request made at the time of filing the above-identified application. A copy of the filing receipt for the above-identified application acknowledging applicants' request for non-publication is attached as Exhibit A.

On April 14, 2003, applicants filed a PCT application (serial No. PCT/US03/11576) that corresponds to the above-identified application. Pursuant to 35 U.S.C. §122, applicants were required to rescind their non-publication request for the above-identified case within forty-five days of filing, i.e., May 29, 2003. Unfortunately, because the PCT application was filed almost two months after filing the above-identified application, applicants' representative did not remember that a non-publication request had been made in the U.S. case before this deadline expired. In reviewing the file today, applicants' representative recognized that a non-publication request had been made in the above-identified application, and that the deadline had passed. It is respectfully submitted that, pursuant to 35 U.S.C. §122, the present application should not be regarded as abandoned if "it is shown to the satisfaction of the Director that the delay in submitting the notice was

09/15/2003 AKELLEY 00000054 161150 10369305
01 FC:1453 1300.00 DA

RECEIVED
AUG 0 7 2003
OFFICE OF PETITIONS

NY2: 1438119.1

Received from < 212 869 9741 > at 6/10/03 8:27:28 PM [Eastern Daylight Time]

unintentional."

Accordingly, pursuant to 37 C.F.R. §1.181, which permits a petition to the Director "in cases in which a statute or the rules specify that the matter is to be determined directly by or reviewed by the [Director]," applicants respectfully petition the Director to accept applicants' rescission of non-publication after the statutory period since applicants' failure to file the rescission before that period expired was unintentional.

The fee for this petition is estimated to be $130. Please charge the required fee to Pennie & Edmonds LLP Deposit Account No. 16-1150. A copy of this sheet is enclosed.

Respectfully submitted,

Date: June 10, 2003

H.C. L. 36,196

Henry C. Lebowitz (Reg. No.)
PENNIE & EDMONDS LLP
1155 Avenue of the Americas
New York, New York 10036-2711
(212) 790-9090

Received from < 212 869 9741 > at 6/10/03 8:27:28 PM [Eastern Daylight Time]

Exhibit A

Received from < 212 869 9741 > at 6/10/03 8:27:28 PM [Eastern Daylight Time]

UNITED STATES PATENT AND TRADEMARK OFFICE

Commissioner for Patents
Washington, DC 20231
www.uspto.gov

APPLICATION NUMBER	FILING DATE	GRP ART UNIT	FIL FEE REC'D	ATTY.DOCKET.NO	DRAWINGS	TOT CLAIMS	IND CLAIMS
10/369,305	02/19/2003	2152	750	11055-005	4	9	3

CONFIRMATION NO. 5568

20583
PENNIE AND EDMONDS
1155 AVENUE OF THE AMERICAS
NEW YORK, NY 100362711

FILING RECEIPT

OC000000009790421

Date Mailed: 04/07/2003

Receipt is acknowledged of this regular Patent Application. It will be considered in its order and you will be notified as to the results of the examination. Be sure to provide the U.S. APPLICATION NUMBER, FILING DATE, NAME OF APPLICANT, and TITLE OF INVENTION when inquiring about this application. Fees transmitted by check or draft are subject to collection. Please verify the accuracy of the data presented on this receipt. **If an error is noted on this Filing Receipt, please write to the Office of Initial Patent Examination's Filing Receipt Corrections, facsimile number 703-746-9195. Please provide a copy of this Filing Receipt with the changes noted thereon. If you received a "Notice to File Missing Parts" for this application, please submit any corrections to this Filing Receipt with your reply to the Notice. When the USPTO processes the reply to the Notice, the USPTO will generate another Filing Receipt incorporating the requested corrections (if appropriate).**

Applicant(s)

Richard T. Oesterreicher, Naples, FL;
Craig Murphy, Kirkland, WA;
George Wright, Duvall, WA;
Greg Ansley, Alpharetta, GA;

Domestic Priority data as claimed by applicant

This appln claims benefit of 60/374,086 04/19/2002
and claims benefit of 60/374,090 04/19/2002
and claims benefit of 60/373,991 04/19/2002
and claims benefit of 60/374,037 04/19/2002

Foreign Applications

If Required, Foreign Filing License Granted: 04/07/2003

Projected Publication Date: Request for Non-Publication Acknowledged

Non-Publication Request: Yes

Early Publication Request: No

Title

R. Gingher
APR 2003

1813
Disclosure due 5/19/03

RECEIVED
AUG 07 2003
OFFICE OF PETITIONS

Hybrid streaming platform

Preliminary Class
709

LICENSE FOR FOREIGN FILING UNDER
Title 35, United States Code, Section 184
Title 37, Code of Federal Regulations, 5.11 & 5.15

GRANTED

The applicant has been granted a license under 35 U.S.C. 184, if the phrase "IF REQUIRED, FOREIGN FILING LICENSE GRANTED" followed by a date appears on this form. Such licenses are issued in all applications where the conditions for issuance of a license have been met, regardless of whether or not a license may be required as set forth in 37 CFR 5.15. The scope and limitations of this license are set forth in 37 CFR 5.15(a) unless an earlier license has been issued under 37 CFR 5.15(b). The license is subject to revocation upon written notification. The date indicated is the effective date of the license, unless an earlier license of similar scope has been granted under 37 CFR 5.13 or 5.14.

This license is to be retained by the licensee and may be used at any time on or after the effective date thereof unless it is revoked. This license is automatically transferred to any related applications(s) filed under 37 CFR 1.53(d). This license is not retroactive.

The grant of a license does not in any way lessen the responsibility of a licensee for the security of the subject matter as imposed by any Government contract or the provisions of existing laws relating to espionage and the national security or the export of technical data. Licensees should apprise themselves of current regulations especially with respect to certain countries, of other agencies, particularly the Office of Defense Trade Controls, Department of State (with respect to Arms, Munitions and Implements of War (22 CFR 121-128)); the Office of Export Administration, Department of Commerce (15 CFR 370.10 (j)); the Office of Foreign Assets Control, Department of Treasury (31 CFR Parts 500+) and the Department of Energy.

NOT GRANTED

No license under 35 U.S.C. 184 has been granted at this time, if the phrase "IF REQUIRED, FOREIGN FILING LICENSE GRANTED" DOES NOT appear on this form. Applicant may still petition for a license under 37 CFR 5.12, if a license is desired before the expiration of 6 months from the filing date of the application. If 6 months has lapsed from the filing date of this application and the licensee has not received any indication of a secrecy order under 35 U.S.C. 181, the licensee may foreign file the application pursuant to 37 CFR 5.15(b).

RECEIVED
AUG 0 7 2003
OFFICE OF PETITIONS

Pennie & Edmonds LLP
ATTORNEYS-AT-LAW

Facsimile Transmission

New York, N.Y.
1155 Avenu of the Americas
New York, N.Y. 10036
(212) 790-9090
Facsimile: (212) 869-8864/9741

July 3, 2003

WRITER'S DIRECT DIAL:
(212) 790-2961
INTERNET ADDRESS:
RGG@PENNIE.COM
DIRECT FAX NUMBER:
(212) 699-0305

Sender: Robert Gingher

Pages (including this page): 9

Our Ref.: 011055-0005-999

Recipient:	Company:	Fax Number:
Office of Petitions	USPTO	703-308-6916

Confirmation copy will not follow.

Re: U.S. Patent Application No 10/369,305
Filed: February 19, 2003
By: Oesterreicher et al.
Titled: Hybrid Streaming Platform

FAX RECEIVED
JUL 0 3 2003
PETITIONS OFFICE

Message

Attached please find a copy of a facsimile transmission and receipt sent June 10, 2003. Please advise us of the status of the above-identified application.

If you have any problems regarding this transmission, please contact Robert Gingher at (212) 790-2961.

The information contained in this facsimile message is information protected by attorney-client and/or the attorney work product privilege. It is intended only for the use of the individual named above and the privileges are not waived by virtue of this having been sent by facsimile. If the person actually receiving this facsimile or any other reader of the facsimile is not the named recipient or the employee or agent responsible to deliver it to the named recipient, any use, dissemination, distribution, or copying of the communication is strictly prohibited. If you have received this communication in error, please immediately notify us by telephone and return the original message to us.

Pennie & Edmonds LLP
ATTORNEYS-AT-LAW

Facsimile Transmission

New Y rk, N.Y.
1155 Avenue of the Americas
N w York, N.Y. 10036
(212) 790-9090
Facsimile: (212) 869-8864/9741

June 10, 2003

WRITER'S DIRECT DIAL:
(212) 790-2961
INTERNET ADDRESS:
RGG@PENNIE.COM
DIRECT FAX NUMBER:
(212) 699-0305

Official

Sender: Robert Gingher

Pages (including this page): 6

Our Ref.: 011055-0005-999

Recipient:	Company:	Fax Number:
Art Unit 2152	USPTO	703-746-7239

Confirmation copy will not follow.

Re: U.S. Patent Application No. 10/369,305
Filed: February 19, 2003
By: Oesterreicher et al.
Titled: Hybrid Streaming Platform

Message

Attached, please find:

- A Rescission of Non-publication Request and Rule 181 Petition; and
- A copy of the Filing Receipt

RECEIVED
AUG 0 7 2003
OFFICE OF PETITIONS

If you have any problems regarding this transmission, please contact Robert Gingher at (212) 790-2961.

The information contained in this facsimile message is information protected by attorney-client and/or the attorney work product privilege. It is intended only for the use of the individual named above and the privileges are not waived by virtue of this having been sent by facsimile. If the person actually receiving this facsimile or any other reader of the facsimile is not the named recipient or the employee or agent responsible to deliver it to the named recipient, any use, dissemination, distribution, or copying of the communication is strictly prohibited. If you have received this communication in error, please immediately notify us by telephone and return the original message to us.

NY2: 1438219.1

TO:Auto-reply fax to 212 869 9741 COMPANY:

Auto-Reply Facsimile Transmission

UNITED STATES PATENT AND TRADEMARK OFFICE

TO:	Fax Sender at 212 869 9741
Fax Information	
Date Received:	6/10/03 8:27:28 PM [Eastern Daylight Time]
Total Pages:	6 (including cover page)

ADVISORY: This is an automatically generated return receipt confirmation of the facsimile transmission received by the Office. Please check to make sure that the number of pages listed as received in Total Pages above matches what was intended to be sent. Applicants are advised to retain this receipt in the unlikely event that proof of this facsimile transmission is necessary. Applicants are also advised to use the certificate of facsimile transmission procedures set forth in 37 CFR 1.8(a) and (b), 37 CFR 1.6(f). Trademark Applicants, also see the Trademark Manual of Examining Procedure (TMEP) section 306 et seq.

Received Cover Page =======>

JUN 10 2003 20:30 FR PENNIE & EDMONDS LLP 212 869 9741 TO 17037487239 P.01/06

Pennie & Edmonds LLP
ATTORNEYS-AT-LAW

Facsimile Transmission

June 10, 2003

New York, N.Y.
1100 Avenue of the Americas
New York, N.Y. 10036
(212) 790-9090
Facsimile: (212) 869-8804/9741

WRITER'S DIRECT DIAL:
(212) 790-9091
INTERNET ADDRESS:
[illegible]
DIRECT FAX NUMBER:
(212) 869-9305

Sender: Robert Gingher

Pages (including this page): 6

Our Ref.: 011055-0005-099

Recipient:	Company:	Fax Number:
An Unit 2152	USPTO	703-748-7239

Confirmation copy will not follow.

Re: U.S. Patent Application No. 10/369,305
Filed: February 19, 2003
By: Oestermeicher et al.
Titled: Hybrid Streaming Platform

Message

Attached, please find:

- A Rescission of Non-publication Request and Rule 181 Petition; and
- A copy of the Filing Receipt

If you have any problems regarding this transmission, please contact Robert Gingher at (212) 790-9091.

The information contained in this facsimile message is intended (indicated by instructions) and/or the attorney-work-product [illegible]

Received from < 212 869 9741 > at 6/10/03 8:27:28 PM [Eastern Daylight Time]

PENNIE & EDMONDS
RECEIVED
JUN 11 2003
REFERRED TO M
O.K. FOR FILING

JUL = 7 27

** TX STATUS REPORT ** AS OF JUN 10 2003 20:39 PAGE.01

PENNIE & EDMONDS LLP

	DATE	TIME	TO/FROM	MODE	MIN/SEC	PGS	JOB#	STATUS
29	06/10	20:37	USPTO	EC--S	01'52"	006	005	OK

Pennie & Edmonds LLP
ATTORNEYS·AT·LAW

Facsimile Transmission

New York, N.Y.
1155 Avenue of the Americas
New York, N.Y. 10036
(212) 790-9090
Facsimile: (212) 869-8864/9741

June 10, 2003

WRITER'S DIRECT DIAL:
(212) 790-2981
INTERNET ADDRESS:
RGG@PENNIE.COM
DIRECT FAX NUMBER:
(212) 689-0305

Sender: Robert Gingher

Pages (including this page): 6

Our Ref.: 011055-0005-999

Recipient:	Company:	Fax Number:
Art Unit 2152	USPTO	703-746-7239

Confirmation copy will not follow.

Re: U.S. Patent Application No. 10/369,305
Filed: February 19, 2003
By: Oesterreicher et al.
Titled: Hybrid Streaming Platform

FAX RECEIVED
JUL 0 3 2003
PETITIONS OFFICE

Message

Attached, please find:

- A Rescission of Non-publication Request and Rule 181 Petition; and
- A copy of the Filing Receipt

If you have any problems regarding this transmission, please contact Robert Gingher at (212) 790-2981.

The information contained in this facsimile message is information protected by attorney-client and/or the attorney work product privilege. It is intended only for the use of the individual named above and the privileges are not waived by virtue of this having been sent by facsimile. If the person actually receiving this facsimile or any other reader of the facsimile is not the named recipient or the employee or agent responsible to deliver it to the named recipient, any use, dissemination, distribution, or copying of the communication is strictly prohibited. If you have received this communication in error, please immediately notify us by telephone and return the original message to us.

NY2: 1438219.1

Pennie & Edmonds LLP
ATTORNEYS·AT·LAW

Facsimile Transmission

June 10, 2003

New York, N.Y.
1155 Avenue of the Americas
New York, N.Y. 10036
(212) 790-9090
Facsimile: (212) 869-8864/9741

WRITER'S DIRECT DIAL:
(212) 790-2961
INTERNET ADDRESS:
RGG@PENNIE.COM
DIRECT FAX NUMBER:
(212) 699-0305

Sender: Robert Gingher

Pages (including this page): 6

Our Ref.: 011055-0005-999

Recipient:	Company:	Fax Number:
Art Unit 2152	USPTO	703-746-7239

Confirmation copy will not follow.

Re: U.S. Patent Application No. 10/369,305
Filed: February 19, 2003
By: Oesterreicher et al.
Titled: Hybrid Streaming Platform

FAX RECEIVED
JUL 0 3 2003
PETITIONS OFFICE

Message

Attached, please find:

- A Rescission of Non-publication Request and Rule 181 Petition; and
- A copy of the Filing Receipt

If you have any problems regarding this transmission, please contact Robert Gingher at (212) 790-2961.

The information contained in this facsimile message is information protected by attorney-client and/or the attorney work product privilege. It is intended only for the use of the individual named above and the privileges are not waived by virtue of this having been sent by facsimile. If the person actually receiving this facsimile or any other reader of the facsimile is not the named recipient or the employee or agent responsible to deliver it to the named recipient, any use, dissemination, distribution, or copying of the communication is strictly prohibited. If you have received this communication in error, please immediately notify us by telephone and return the original message to us.

UNITED STATES PATENT AND TRADEMARK OFFICE

Commissioner for Patents
United States Patent and Trademark Office
P. O. Box 1450
Alexandria, VA 22313-1450
www.uspto.gov

Paper No. 7

PENNIE AND EDMONDS
1155 AVENUE OF THE AMERICAS
NEW YORK, NY 10036-2711

COPY MAILED

SEP 15 2003

OFFICE OF PETITIONS

In re Application of
Richard T. Oesterreicher et al
Application No. 10/369,305
Filed: February 19, 2003
Attorney Docket No. 11055-005

DECISION GRANTING PETITION
UNDER 37 CFR 1.137(b)

This is a decision on the petition under 37 CFR 1.181, filed June 10, 2003, and supplemented July 3, 2003, which is being treated as a petition under 37 CFR 1.137(b) to revive the instant nonprovisional application for failure to timely notify the U.S. Patent and Trademark (USPTO) of the filing of an application in a foreign country, or under a multinational treaty that requires publication of applications eighteen months after filing. *See* 37 CFR 1.137(f).

The petition is **GRANTED**.

Petitioner states that the instant nonprovisional application is the subject of an application filed in an eighteen month publication country on April 14, 2003. However, the USPTO was unintentionally not notified of this filing within 45 days subsequent to the filing of the subject application in an eighteen month publication country.

In view of the above, this application became abandoned pursuant to 35 U.S.C. § 122(b)(2)(B)(iii) and 37 CFR 1.213(c) for failure to timely notify the Office of the filing of an application in a foreign country or under a multilateral international agreement that requires publication of applications 18 months after filing.

A petition to revive an application abandoned pursuant to 35 U.S.C. 122(b)(2)(B)(iii) for failure to notify the USPTO of a foreign filing must be accompanied by:

(1) the required reply which is met by the notification of such filing in a foreign country or under a multinational treaty;
(2) the petition fee as set forth in 37 CFR 1.17(m);

and
(3) a statement that the entire delay in filing the required reply from the due date of the reply until the filing of a grantable petition was unintentional.

The instant petition has been found in compliance with 37 CFR 1.137(b). However, while the statement of unintentional delay does not comply with the rule, the statement presented will be construed as meaning that "the entire delay in filing the required reply [notification of foreign filing under 35 U.S.C. § 122(b)(2)(B)(iii)] until the filing of a grantable petition was unintentional." Accordingly, the failure to timely notify the Office of a foreign or international filing within 45 days as provided by 35 U.S.C. § 122(b)(2)(B)(iii) is accepted as having been unintentionally delayed.

Pursuant to petitioner's authorization, Deposit Account No. 16-1150 was charged $1,300.00 for the petition to revive an unintentionally abandoned application (37 CFR 1.137(f)).

Any inquiries concerning this decision may be directed to Wan Laymon at (703) 306-5685.

The application is being forwarded to the Office of Initial Patent Examination for issuance of the Notice Regarding Rescission of Nonpublication Request projected publication date.

Frances Hicks

Frances Hicks
Lead Petitions Examiner
Office of Petitions
Office of the Deputy Commissioner
for Patent Examination Policy

UNITED STATES PATENT AND TRADEMARK OFFICE

Commissioner for Patents
United States Patent and Trademark Office
P. O. Box 1450
Alexandria, VA 22313-1450
www.uspto.gov

PENNIE AND EDMONDS
1155 AVENUE OF THE AMERICAS
NEW YORK, NY 10036-2711

COPY MAILED

SEP 15 2003

OFFICE OF PETITIONS

In re Application of	:	
Richard T. Oesterreicher et al	:	
Application No. 10/369,306	:	DECISION GRANTING PETITION
Filed: February 19, 2003	:	UNDER 37 CFR 1.137(b)
Attorney Docket No. 11055-006	:	

This is a decision on the petition under 37 CFR 1.181, filed by facsimile transmission on July 3, 2003, which is being treated as a petition under 37 CFR 1.137(b) to revive the instant nonprovisional application for failure to timely notify the U.S. Patent and Trademark (USPTO) of the filing of an application in a foreign country, or under a multinational treaty that requires publication of applications eighteen months after filing. *See* 37 CFR 1.137(f).

The petition is **GRANTED**.

Petitioner states that the instant nonprovisional application is the subject of an application filed in an eighteen month publication country on April 14, 2003. However, the USPTO was unintentionally not notified of this filing within 45 days subsequent to the filing of the subject application in an eighteen month publication country.

In view of the above, this application became abandoned pursuant to 35 U.S.C. § 122(b)(2)(B)(iii) and 37 CFR 1.213(c) for failure to timely notify the Office of the filing of an application in a foreign country or under a multilateral international agreement that requires publication of applications 18 months after filing.

A petition to revive an application abandoned pursuant to 35 U.S.C. 122(b)(2)(B)(iii) for failure to notify the USPTO of a foreign filing must be accompanied by:

(1) the required reply which is met by the notification of such filing in a foreign country or under a multinational treaty;
(2) the petition fee as set forth in 37 CFR 1.17(m); and

and
(3) a statement that the entire delay in filing the required reply from the due date of the reply until the filing of a grantable petition was unintentional.

The instant petition has been found in compliance with 37 CFR 1.137(b). However, while the statement of unintentional delay does not comply with the rule, the statement presented will be construed as meaning that "the entire delay in filing the required reply [notification of foreign filing under 35 U.S.C. § 122(b)(2)(B)(iii)] until the filing of a grantable petition was unintentional." Accordingly, the failure to timely notify the Office of a foreign or international filing within 45 days as provided by 35 U.S.C. § 122(b)(2)(B)(iii) is accepted as having been unintentionally delayed.

Pursuant to petitioner's authorization, Deposit Account No. 16-1150 was charged $1,300.00 for the petition to revive an unintentionally abandoned application (37 CFR 1.137(f)).

Any inquiries concerning this decision may be directed to Wan Laymon at (703) 306-5685.

Frances Hicks

Frances Hicks
Lead Petitions Examiner
Office of Petitions
Office of the Deputy Commissioner
for Patent Examination Policy

UNITED STATES PATENT AND TRADEMARK OFFICE

Commissioner for Patents
United States Patent and Trademark Office
P. O. Box 1450
Alexandria, VA 22313-1450
www.uspto.gov

Paper No. 7

PENNIE AND EDMONDS
1155 AVENUE OF THE AMERICAS
NEW YORK, NY 10036-2711

COPY MAILED

SEP 1 5 2003

OFFICE OF PETITIONS

In re Application of Richard T. Oesterreicher et al Application No. 10/369,307 Filed: February 19, 2003 Attorney Docket No. 11055-011	DECISION GRANTING PETITION UNDER 37 CFR 1.137(b)

This is a decision on the petition under 37 CFR 1.181, filed June 10, 2003, and supplemented July 3, 2003, which is being treated as a petition under 37 CFR 1.137(b) to revive the instant nonprovisional application for failure to timely notify the U.S. Patent and Trademark (USPTO) of the filing of an application in a foreign country, or under a multinational treaty that requires publication of applications eighteen months after filing. *See* 37 CFR 1.137(f).

The petition is **GRANTED**.

Petitioner states that the instant nonprovisional application is the subject of an application filed in an eighteen month publication country on April 14, 2003. However, the USPTO was unintentionally not notified of this filing within 45 days subsequent to the filing of the subject application in an eighteen month publication country.

In view of the above, this application became abandoned pursuant to 35 U.S.C. § 122(b)(2)(B)(iii) and 37 CFR 1.213(c) for failure to timely notify the Office of the filing of an application in a foreign country or under a multilateral international agreement that requires publication of applications 18 months after filing.

A petition to revive an application abandoned pursuant to 35 U.S.C. 122(b)(2)(B)(iii) for failure to notify the USPTO of a foreign filing must be accompanied by:

(1) the required reply which is met by the notification of such filing in a foreign country or under a multinational treaty;
(2) the petition fee as set forth in 37 CFR 1.17(m);

and
(3) a statement that the entire delay in filing the required reply from the due date of the reply until the filing of a grantable petition was unintentional.

The instant petition has been found in compliance with 37 CFR 1.137(b). However, while the statement of unintentional delay does not comply with the rule, the statement presented will be construed as meaning that "the entire delay in filing the required reply [notification of foreign filing under 35 U.S.C. § 122(b)(2)(B)(iii)] until the filing of a grantable petition was unintentional." Accordingly, the failure to timely notify the Office of a foreign or international filing within 45 days as provided by 35 U.S.C. § 122(b)(2)(B)(iii) is accepted as having been unintentionally delayed.

Pursuant to petitioner's authorization, Deposit Account No. 16-1150 was charged $1,300.00 for the petition to revive an unintentionally abandoned application (37 CFR 1.137(f)).

Any inquiries concerning this decision may be directed to Wan Laymon at (703) 306-5685.

The application is being forwarded to the Office of Initial Patent Examination for issuance of the Notice Regarding Rescission of Nonpublication Request projected publication date.

Frances Hicks

Frances Hicks
Lead Petitions Examiner
Office of Petitions
Office of the Deputy Commissioner
for Patent Examination Policy

UNITED STATES PATENT AND TRADEMARK OFFICE

Commissioner for Patents
United States Patent and Trademark Office
P.O. Box 1450
Alexandria, VA 22313-1450
www.uspto.gov

STERNE KESSLER GOLDSTEIN & FOX PLLC
1100 NEW YORK AVENUE, NW
WASHINGTON, DC 20005

COPY MAILED

NOV 19 2004

OFFICE OF PETITIONS

In re Application of	:
Santiago del Puerto et al	:
Application No. 10/369,323	: DECISION GRANTING PETITION
Filed: February 20, 2003	: UNDER 37 CFR 1.313(c)(2)
Attorney Docket No. 1857.0810004	:

This is a decision on the petition, filed November 18, 2004, under 37 CFR 1.313(c)(2) to withdraw the above-identified application from issue after payment of the issue fee.

The petition is **GRANTED**.

The above-identified application is withdrawn from issue for consideration of a submission under 37 CFR 1.114 (request for continued examination). See 37 CFR 1.313(c)(2).

Petitioner is advised that the issue fee paid on September 23, 2004 in the above-identified application cannot be refunded. If, however, the above-identified application is again allowed, petitioner may request that it be applied towards the issue fee required by the new Notice of Allowance.[1]

Telephone inquiries should be directed to the undersigned at (571) 272-3218.

This matter is being referred to Technology Center AU 2851 for processing of the request for continued examination under 37 CFR 1.114 and for consideration of the concurrently filed Information Disclosure Statement.

Frances Hicks
Petitions Examiner
Office of Petitions
Office of the Deputy Commissioner
for Patent Examination Policy

---

[1] *The request to apply the issue fee to the new Notice may be satisfied by completing and returning the new Issue Fee Transmittal Form PTOL-85(b), which includes the following language thereon: "Commissioner for Patents is requested to apply the Issue Fee and Publication Fee (if any) or re-apply any previously paid issue fee to the application identified above." Petitioner is advised that, whether a fee is indicated as being due or not, the Issue Fee Transmittal Form* ***must*** *be completed and timely submitted to avoid abandonment. Note the language in bold text on the first page of the Notice of Allowance and Fee(s) Due (PTOL-85).*

UNITED STATES PATENT AND TRADEMARK OFFICE

Commissioner for Patents
United States Patent and Trademark Office
P.O. Box 1450
Alexandria, VA 22313-1450
www.uspto.gov

FISH & RICHARDSON P.C.
CITIGROUP CENTER
52ND FLOOR
153 EAST 53RD STREET
NEW YORK NY 10022-4611

COPY MAILED

DEC 0 2 2009

OFFICE OF PETITIONS

In re Patent No. 6958227	:	
Issue Date: 10/25/2005	:	
Application No. 10/369327	:	ON PETITION
Filed: 02/14/2003	:	
Attorney Docket No. 13758-002002	:	

This is a decision on the petition filed on May 5, 2009, which is being treated as a petition under 37 CFR 3.81(b) to correct the name of the assignee on the front page of the above-identified patent by way of a certificate of correction.

The request is **GRANTED**.

Telephone inquiries concerning this decision may be directed to the undersigned at (571) 272-3231. Inquiries regarding the issuance of a certificate of correction should be directed to the Certificate of Correction Branch at (571) 272-4200.

The Certificates of Correction Branch will be notified of this decision granting the petition under 37 CFR 3.81(b) and directing issuance of the requested Certificate of Correction.

D Wood

Douglas I. Wood
Attorney
Office of Petitions

UNITED STATES PATENT AND TRADEMARK OFFICE

Commissioner for Patents
United States Patent and Trademark Office
P.O. Box 1450
Alexandria, VA 22313-1450
www.uspto.gov

FRANK L. KUBLER
13261 S.W. 54TH COURT
MIRAMAR, FL 33027

COPY MAILED

MAR 12 2007

OFFICE OF PETITIONS

In re Application of	:	
Wallace D. Sanger	:	
Application No. 10/369,351	:	ON PETITION
Filed: February 18, 2003	:	
Attorney Docket No.	:	

This is a decision on the petition under 37 CFR 1.137(b), filed December 29, 2006, to revive the above-identified application.

The petition is **GRANTED**.

The two-month period for filing an appeal brief in triplicate (accompanied by the fee required by 37 CFR 1.17(c)), runs from the date of this decision.

The above-identified application became abandoned for failure to reply in a timely manner to the final Office action mailed February 24, 2005, which set a shortened statutory period for reply of three (3) months. No extensions of time under the provisions of 37 CFR 1.136(a) were obtained. Accordingly, the above-identified application became abandoned on May 25, 2005.

Telephone inquiries concerning this decision should be directed to Irvin Dingle at (571) 272-3210.

This matter is being forwarded to Technology Center AU 3673 for further processing.

Irvin Dingle
Petitions Examiner
Office of Petitions

UNITED STATES PATENT AND TRADEMARK OFFICE

COMMISSIONER FOR PATENTS
UNITED STATES PATENT AND TRADEMARK OFFICE
P.O. BOX 1450
ALEXANDRIA, VA 22313-1450
www.uspto.gov

Paper No.

FULWIDER PATTON LEE & UTECHT, LLP
HOWARD HUGHES CENTER
6060 CENTER DRIVE
TENTH FLOOR
LOS ANGELES, CA 90045

COPY MAILED
APR 13 2004
OFFICE OF PETITIONS

In re Application of	:	
Kleine et al.	:	
Application No. 10/369,358	:	
Deposited: February 18, 2003	:	ON PETITION
Title of Invention:	:	
PULSED FIBER LASER CUTTING	:	
SYSTEM FOR MEDICAL IMPLANTS	:	

This is a decision on the Petition under 37 CFR 1.182, filed January 23, 2004, to change the order of the names of the inventors.

The Petition is **granted**.

The order of the names of the inventors has been changed as follows:

1. Klaus Kleine
2. Stephen Jones
3. Brad Whitney
4. Yu-Chun Ku
5. Jason Fox

This application is being forwarded to Technology Center 1725 via Application Branch Data Input to change the order of inventorship.

Telephone inquiries concerning this matter should be directed to at (703) 305-0014.

Derek L. Woods
Petitions Attorney
Office of Petitions

UNITED STATES PATENT AND TRADEMARK OFFICE

Commissioner for Patents
United States Patent and Trademark Office
P.O. Box 1450
Alexandria, VA 22313-1450
www.uspto.gov

WOODCOCK WASHBURN LLP
ONE LIBERTY PLACE, 46TH FLOOR
1650 MARKET STREET
PHILADELPHIA PA 19103

COPY MAILED
SEP 2 0 2006
OFFICE OF PETITIONS

In re Application of	:	
Sibal, et al.	:	
Application No. 10/369,361	:	DECISION ON PETITION
Filed: February 18, 2003	:	TO WITHDRAW
Attorney Docket No. KIRU-0023	:	FROM RECORD
	:	

This is a decision on the Request to Withdraw as attorney or agent of record under 37 C.F.R. § 1.36(b), filed June 21, 2006.

The request is **APPROVED**.

A grantable request to withdraw as attorney/agent of record must be signed by every attorney/agent seeking to withdraw or contain a clear indication that one attorney is signing on behalf of another/others. A request to withdraw will not be approved unless at least 30 (thirty) days would remain between the date of approval and the later of the expiration date of a time to file a response or the expiration date of the maximum time period which can be extended under 37 C.F.R. § 1.136(a).

The request was signed by Peter M. Ullman on behalf of all attorneys of record who are associated with customer No. 23377.

All attorneys/agents associated with the Customer Number 23377 have been withdrawn.

Applicant is reminded that there is no attorney of record at this time.

All future correspondence will be directed to the first named inventor Sandeep Sibal at the address indicated below.

The request to change the correspondence of record is not acceptable as the requested correspondence address is not that of: (1) the first named signing inventor; or (2) an intervening assignee of the entire interest under 37 C.F.R 3.71. All future communications from the Office will be directed to the first named signing inventor at the first copied address below until otherwise properly notified by the applicant.

There is an outstanding Office action mailed May 5, 2006 that requires a reply from the applicant.

Telephone inquiries concerning this decision should be directed to April Wise at 571-272-1642.

April M. Wise
Petitions Examiner
Office of Petitions

cc: Sandeep Sibal
228 Country Club Lane
Scotch Plains, NJ 07076

cc: Mr. Ashok Tankha, ESQ.
IP Procure. Inc
36 Greenleigh Drive
Sewell, NJ 08080

UNITED STATES PATENT AND TRADEMARK OFFICE

UNITED STATES DEPARTMENT OF COMMERCE
United States Patent and Trademark Office
Address: COMMISSIONER FOR PATENTS
P.O. Box 1450
Alexandria, Virginia 22313-1450
www.uspto.gov

APPLICATION NUMBER	FILING OR 371 (c) DATE	FIRST NAMED APPLICANT	ATTY. DOCKET NO./TITLE
10/369,361	02/18/2003	Sandeep Sibal	KIRU-0023

CONFIRMATION NO. 4828

OC000000020494595

OC000000020494595

23377
WOODCOCK WASHBURN LLP
ONE LIBERTY PLACE, 46TH FLOOR
1650 MARKET STREET
PHILADELPHIA, PA 19103

Date Mailed: 09/19/2006

NOTICE REGARDING CHANGE OF POWER OF ATTORNEY

This is in response to the Power of Attorney filed 06/21/2006.

- The withdrawal as attorney in this application has been accepted. Future correspondence will be mailed to the new address of record. 37 CFR 1.33.

April M Wise

APRIL M WISE
OP (571) 272-1642

FORMER ATTORNEY/AGENT COPY

UNITED STATES PATENT AND TRADEMARK OFFICE

APR 19 2007

Commissioner for Patents
United States Patent and Trademark Office
P.O. Box 1450
Alexandria, VA 22313-1450
www.uspto.gov

JUNEAU PARTNERS
P.O. BOX 2516
ALEXANDRIA, VA 22301

In re Application of	:
Jennifer Bartels et al	:
Serial No.: 10/369,368	: PETITION DECISION
Filed: February 18, 2003	:
Attorney Docket No.: BAR-LIN-368	:

This is in response to the petition under 37 CFR 1.181, filed January 18, 2007, requesting restarting of the period for response for reasons explained below.

A review of the history of this application shows that a first Office action setting forth a restriction requirement was mailed to applicant at 601 N HAZEL ST., HAMMONO LA 70401, on August 22, 2005. This was shortly before Hurricane Katrina devastated the area included in applicant's ZIP CODE address. In view of these circumstances, the Office issued a document via the Official Gazette for applicant's ZIP CODE indicating that any application in which reply to an Office action was pending as of September 1, 2005, would have the period for response automatically restarted as of September 15, 2005. Thus the examiner's Office action originally mailed August 22, 2005, is considered to have been remailed as of September 15, 2005.

Applicant's petition that the period for reply be restarted, filed January 18, 2006, is considered moot in view of the Official Gazette notice. The period for reply set in the Office action was one month or thirty days, whichever was longer, with the possibility of extending the time for reply up to the statutory period of six months from the September 15, 2005, remailing date. Thus applicant's' last date for timely reply within the six month statutory period was March 15, 2006. As applicant's reply was not received until May 8, 2006, the reply was untimely and the application is now considered abandoned. A Notice of abandonment will be mailed shortly.

The petition is **DENIED**.

The application will be forwarded to the examiner for mailing of a Notice of Abandonment.

Should there be any questions about this decision please contact William R. Dixon, Jr., by letter addressed to Director, TC 1600, at the address listed above, or by telephone at 571-272-0519 or by facsimile sent to the general Office facsimile number, 571-273-8300.

William R. Dixon, Jr.
Special Program Examiner
Technology Center 1600

10/369,368

Office Actions and Notice of Allowances Previously Mailed to areas of Alabama, Louisiana, and Mississippi Affected by Hurricane Katrina

The United States Patent and Trademark Office (USPTO) considers the effects of Hurricane Katrina to be an "extraordinary situation" within the meaning of 37 CFR 1.183 for the affected applicants. For applications pending in the Office as of September 1, 2005 having a correspondence address in the affected areas of Alabama, Louisiana, and Mississippi in which a reply to an Office action (final, non-final, or other), a notice of allowance, or other Office notice is outstanding, and has not yet expired, the USPTO is withdrawing the Office action, notice of allowance, or other Office notice, and re-issuing an Office action, notice of allowance, or other Office notice as applicable. On September 1, 2005, the USPTO ceased mailing of correspondences to the affected zip codes listed below. *See* MPEP § 710.06 (Situations When Reply Period Is Reset or Restarted).

The United States Postal Service (USPS) has indicated that there is a service interruption in the areas of Alabama, Louisiana, and Mississippi affected by Hurricane Katrina. Therefore, the USPTO is withdrawing the previous Office action, notice of allowance, or other Office notice, and re-issuing an Office action, notice of allowance, or other Office notice as applicable in its image file wrapper (IFW) of the application, for applications having a correspondence address in the following USPS zip codes in Alabama, Louisiana, or Mississippi: 36XXX, 39XXX, 700XX, 701XX, 702XX, 703XX, and 704XX. This Official Gazette notice is the notice required by 35 U.S.C. 133 and 37 CFR 1.33 because the usual mailing of a notice of this actions (*i.e.*, mailing a copy of the re-issued Office action) would be futile because of the USPS service interruption.

Applicants may view the notice restarting the period for reply and the Office action, notice of allowance or other Office notice in their application via the private side of the USPTO's Patent Application Inspection Retrieval (PAIR) system. Applicants who do not currently have access to the private side of the USPTO's PAIR system will still be able to view the notice restarting the period for reply and the Office action, notice of allowance, or other Office notice in published applications via the public side of the USPTO's PAIR system.

Inquiries concerning this notice, or on how to obtain access to the private side of the USPTO PAIR system, may be directed to a legal advisor in the Office of Patent Legal Administration, at 877-PTO-NORL (877-786-6675) or 571-272-7704, or by e-mail at PatentPractice@uspto.gov.

Date: 9/15/05 John Doll

John Doll
Commissioner for Patents

This period for reply set in the previous Office action or notice, or notice of allowance, in the above- identified application is restarted to begin with the SEP 15 2005 date of this communication.

UNITED STATES PATENT AND TRADEMARK OFFICE

COMMISSIONER FOR PATENTS
UNITED STATES PATENT AND TRADEMARK OFFICE
P.O. BOX 1450
ALEXANDRIA, VA 22313-1450
www.uspto.gov

JUNEAU PARTNERS
P.O. BOX 2516
ALEXANDRIA, VA 22301

In re Application of	:
Jennifer Bartels	: DECISION VACATING
Filed: February 18, 2003	: PETITION DECISION
Application No.: 10/369,368	:
Attorney Docket No.: BAR-LIN-368	:

MAILED
JUL 13 2007

The Office hereby vacates the petition decision mailed April 19, 2007.

BACKGROUND

1. The present application was filed February 18, 2003. The correspondence address set forth in the originally filed declaration was 601 N. Hazel Street, Hammond, Louisiana, 70401.

2. On August 22, 2005, a restriction requirement was mailed to the correspondence address of record.

3. On September 15, 2005, the Office issued a notice entitled, "Office Actions and Notice of Allowances Previously Mailed to areas of Alabama, Louisiana and Mississippi Affected by Hurricane Katrina." Since the present application had a correspondence address within the affected area (*i.e.*, 70401), the Office withdrew and re-issued the restriction requirement mailed August 22, 2005, pursuant to the notice. The period for reply set in the restriction requirement was restarted on September 15, 2005.

3. On October 11, 2005, the Office published the notice in the Official Gazette (1299 OG 58, October 11, 2005).

4. On January 18, 2006, the applicant filed a power of attorney and a request to restart the period for reply (37 CFR 1.183).

5. On March 7, 2006, the Office restarted the period for reply to the restriction requirement.

6. On May 8, 2006, the applicant filed a response to restriction requirement and requested a one-month extension of time. The response was unsigned.

7. On April 19, 2007, a decision on petition was mailed. The decision denied the January 18, 2006, request to restart the period for reply and indicated that the application was abandoned.

8. On June 6, 2007, the Office mailed a non-final rejection setting forth a three-month period for reply.

DECISION

In response to the request to restart the period for reply to Office action filed January 18, 2006, the Office restarted the time period for reply on March 7, 2006.

Accordingly, the petition decision mailed April 19, 2007, is hereby **vacated**.

The time period for reply to the non-final Office action continues to run from June 6, 2007.

It is noted that the response to restriction requirement filed May 8, 2006, is not signed in accordance with 37 CFR 1.4. Applicant is advised to promptly file a ratification (*e.g.*, signed copy) of the response to restriction requirement.

Telephone inquiries concerning this communication should be directed to Terry J. Dey at (571) 272-7730.

Eugenia Jones

Eugenia Jones
Senior Legal Advisor
Office of Patent Legal Administration
Office of Deputy Commissioner
for Patent Examination Policy

UNITED STATES PATENT AND TRADEMARK OFFICE

Commissioner for Patents
United States Patent and Trademark Office
P.O. Box 1450
Alexandria, VA 22313-1450
www.uspto.gov

MAILED
FROM DIRECTORS OFFICE

APR 15 2005

TECHNOLOGY CENTER 3600

WILLIAMS, MORGAN & AMERSON, P.C.
10333 RICHMOND, SUITE 1100
HOUSTON, TX 77042

In re application of
Gregory M. Richards
Application No. 10/369,370
Filed: February 18, 2003
For: APPARATUS AND METHOD FOR RESTRAINING AND RELEASING A CONTROL SURFACE

DECISION ON REQUEST FOR WITHDRAWAL OF ATTORNEY

This is a decision on the request filed on March 29, 2005, under 37 CFR 1.36 and MPEP 402.06, requesting permission to withdraw as the attorney of record in the above-identified application.

The request is **NOT APPROVED**.

Under 37 CFR 1.36 an attorney may withdraw only upon application to and approval by the Commissioner. It should be noted that a withdrawal is effective when approved, not when filed. Besides giving due notice to his or her client and delivering to the client all papers and property to which the client is entitled as specified under 37 CFR 10.40, approval of such a request requires that the following conditions be met:

A) Each attorney of record must sign the notice of withdrawal, or the notice must contain a clear indication of one attorney signing on behalf of another, because the Office does not recognize law firms;

B) A proper reason for the withdrawal as enumerated in 37 CFR 10.40(b) or subsection (1)-(6) of 37 CFR 10.40(c) must be provided; and

C) If withdrawal is requested in accordance with 37 CFR 10.40(c) above, there must be at least 30 days between approval of the withdrawal and the later of the expiration date of a time period for reply or the expiration date of the period which can be obtained by a petition and fee for extension of time under 37 CFR 1.136(a).

The request to withdraw as attorney in the above-identified application is not approved because the request does not comply with Item A).

The attorneys listed on the original declaration do not match those appointed in Customer No. 23720.

It is suggested that the request be resubmitted and that such request specifically state "the signing attorney is signing on behalf of all attorneys of record in this application. There is a box on the form that can be checked indicating this.

Steven Meyers
Special Programs Examiner
Patent Technology Center 3600
(703) 308-3868

SM/dew: 4/8/05

UNITED STATES PATENT AND TRADEMARK OFFICE

Commissioner for Patents
United States Patent and Trademark Office
P.O. Box 1450
Alexandria, VA 22313-1450
www.uspto.gov

In re Patent No. 6761089
Issue Date: July 13,2004
Application No. 10369382
Filed: February 19,2003
Attorney Docket No. 19846-41573

:

:DECISION GRANTING PETITION
:UNDER 37 CFR 1.378(c)

:

This is a decision on the electronic petition, filed November 13,2008 ,under 37 CFR 1.378(c) to accept the unintentionally delayed payment of the 3.5 year maintenance fee for the above-identified patent.

The petition is **GRANTED**.

The maintenance fee is accepted, and the above-identified patent reinstated as of November 13,2008 . This decision also constitutes notice that the fee has been accepted. An electronic copy of the petition and this decision has been created as an entry in the Image File Wrapper. Nevertheless, petitioner should print and retain an independent copy.

Telephone inquiries related to this electronic decision should be directed to the Electronic Business Center at 1-866-217-9197.

UNITED STATES PATENT AND TRADEMARK OFFICE

Commissioner for Patents
United States Patent and Trademark Office
P.O. Box 1450
Alexandria, VA 22313-1450
www.uspto.gov

JJGJr: 08-06

Paper No: __

HAYNES AND BOONE, LLP
901 MAIN STREET, SUITE 3100
DALLAS TX 75202

COPY MAILED

SEP 18 2006

OFFICE OF PETITIONS

In re Application of :
Jamieson, et al. :
Application No. 10/369,411 : DECISION
Filed: 18 February, 2003 :
Attorney Docket No.: 38131.6 :

This is a decision on the petition, filed 24 May, 2006, to revive the instant nonprovisional application under the provisions of 37 C.F.R. §1.137(f).

NOTES:

The filing of status inquiries at a minimum of three- (3-) month intervals may provide a showing of diligence should the extended delay be questioned (for example, as required under 37 C.F.R. §1.181).

Monitoring of the status of applications on Private PAIR can inform one's management of application responses and provide an indication when mailings of Office actions should be expected.

The petition is **GRANTED**.

Petitioner states that the instant nonprovisional application is the subject of an application filed in a foreign country or otherwise requiring publication on 18 March, 2004. Moreover, Petitioner submitted the instant petition (with recision request) 24 May, 2006, upon learning of the error.

Thus, Petitioner alleges unintentional failure to notify the U.S. Patent and Trademark Office of this filing of the subject application in a foreign country within 45 days of that filing.

In view of the above, this application became abandoned pursuant to 35 U.S.C. §122(b)(2)(B)(iii) and 37 C.F.R. §1.213(c) for failure to timely notify the Office of the filing of an application in a foreign country, or under a multilateral international agreement, that requires publication of applications 18 months after filing.

A petition under 37 C.F.R. §1.137(f) must be accompanied by:

> (1) the reply--which is met by the notification of such filing in a foreign country or under a multinational treaty;
>
> (2) the petition fee as set forth in 37 C.F.R. §1.17(m); and
>
> (3) a statement that the entire delay in filing the required reply from the due date of the reply until the filing of a grantable petition was unintentional.

The instant petition has been found to be in compliance with 37 C.F.R. §1.137(f). Accordingly, the failure to timely notify the Office of a foreign or international filing within 45 days after the date of filing of such foreign or international application as provided by 35 U.S.C. §122(b)(2)(B)(iii) and 37 C.F.R. §1.213(c) is accepted as having been unintentionally delayed.

The previous Request and Certification under 35 U.S.C. §122(b)(2)(B)(I) has been rescinded. A Notice Regarding Rescission of Nonpublication Request, which sets forth the projected publication date of ***7 December, 2006***, accompanies this decision.

This application is being released to Technology Center 2100 for further processing in due course.

While telephone inquiries regarding this decision may be directed to the undersigned at (571) 272-3214, it is noted that all practice before the Office is in writing (see: 37 C.F.R. §1.2[1]) and the proper authority for action on any matter in this regard are the statutes (35 U.S.C.), regulations (37 C.F.R.) and the commentary on policy (MPEP). Therefore, no telephone discussion may be controlling or considered authority for Petitioner's action(s).

John J. Gillon, Jr.
Senior Attorney
Office of Petitions

ATTACHMENT: Notice Regarding Rescission of Nonpublication Request

[1] The regulations at 37 C.F.R. §1.2 provide:
§1.2 Business to be transacted in writing.
All business with the Patent and Trademark Office should be transacted in writing.The personal attendance of applicants or their attorneys or agents at the Patent and Trademark Office is unnecessary. The action of the Patent and Trademark Office will be based exclusively on the written record in the Office. No attention will be paid to any alleged oral promise, stipulation,or understanding in relation to which there is disagreement or doubt.

UNITED STATES PATENT AND TRADEMARK OFFICE

UNITED STATES DEPARTMENT OF COMMERCE
United States Patent and Trademark Office
Address: COMMISSIONER FOR PATENTS
P.O. Box 1450
Alexandria, Virginia 22313-1450
www.uspto.gov

APPLICATION NUMBER	FILING/RECEIPT DATE	FIRST NAMED APPLICANT	ATTY. DOCKET NO.
10/369,411	02/18/2003	Ross Alexander Jamieson	38131.6

CONFIRMATION NO. 5098

000027683
HAYNES AND BOONE, LLP
901 MAIN STREET, SUITE 3100
DALLAS, TX 75202

Date Mailed: 08/28/2006

Communication Regarding Rescission Of Nonpublication Request and/or Notice of Foreign Filing

Applicant's rescission of the previously-filed nonpublication request and/or notice of foreign filing is acknowledged. The paper has been reflected in the Patent and Trademark Office's (USPTO's) computer records so that the earliest possible projected publication date can be assigned.

The projected publication date is 12/07/2006.

If applicant rescinded the nonpublication request before or on the date of "foreign filing,"[1] then no notice of foreign filing is required.

If applicant foreign filed the application after filing the above application and before filing the rescission, and the rescission did not also include a notice of foreign filing, then a notice of foreign filing (not merely a rescission) is required to be filed within 45 days of the date of foreign filing. See 35 U.S.C. § 122(b)(2)(B)(iii), and Clarification of the United States Patent and Trademark Office's Interpretation of the Provisions of 35 U.S.C. § 122(b)(2)(B)(ii)-(iv), 1272 Off. Gaz. Pat. Office 22 (July 1, 2003).

If a notice of foreign filing is required and is not filed within 45 days of the date of foreign filing, then the application becomes abandoned pursuant to 35 U.S.C. § 122(b)(2)(B)(iii). In this situation, applicant should either file a petition to revive or notify the Office that the application is abandoned. See 37 CFR 1.137(f). Any such petition to revive will be forwarded to the Office of Petitions for a decision. Note that the filing of the petition will not operate to stay any period of reply that may be running against the application.

Questions regarding petitions to revive should be directed to the Office of Petitions at (571) 272-3282. Questions regarding publications of patent applications should be directed to the patent application publication hotline at (703) 605-4283 or by e-mail pgpub@uspto.gov.

[1] Note, for purpose of this notice, that "foreign filing" means "filing an application directed to the same invention in another country, or under a multilateral international agreement, that requires publication of applications 18 months after filing".

UNITED STATES PATENT AND TRADEMARK OFFICE

Commissioner for Patents
United States Patent and Trademark Office
P.O. Box 1450
Alexandria, VA 22313-1450
www.uspto.gov

HAYNES AND BOONE, LLP
IP Section
2323 Victory Avenue
Suite 700
Dallas TX 75219

MAILED

JAN 26 2010

OFFICE OF PETITIONS

In re Application of	:	
Jamieson et al.	:	
Application No. 10/369,411	:	DECISION ON PETITION
Filed: February 18, 2003	:	
Attorney Docket No. 38131.6	:	

This is a decision on the petition under the unintentional provisions of 37 CFR 1.137(b), filed December 1, 2009, to revive the above-identified application.

The petition is **GRANTED**.

This application became abandoned for failure to reply in a proper and timely manner to the final Office action mailed November 21, 2008. No extensions of time under the provisions of 37 CFR 1.136(a) were obtained. Accordingly, this application became abandoned on February 22, 2009. A Notice of Abandonment was mailed on August 3, 2009.

The petition satisfies the requirements of 37 CFR 1.137(b) in that petitioner has supplied (1) the reply in the form of a Notice of Appeal and fee of $540.00; (2) the petition fee of $1,620.00; and (3) a proper statement of unintentional delay.

The two-month period for filing an appeal brief under 37 CFR 41.37 (accompanied by the fee required by 37 CFR 41.20(b)(2)), runs from the date of this decision.

Additionally, it is noted that petitioner has filed Reasons In Support of Pre-Appeal Brief Request For Review with the instant peition.

Telephone inquiries concerning this decision should be directed to the undersigned at (571) 272-7751.

This application is being referred to Technology Center AU 2117 to await the filing of an appeal brief or for such other appropriate reply as may be submitted to continue prosecution of the application.

Joan Olszewski

Joan Olszewski
Petitions Examiner
Office of Petitions

UNITED STATES PATENT AND TRADEMARK OFFICE

Commissioner for Patents
United States Patent and Trademark Office
P.O. Box 1450
Alexandria, VA 22313-1450
www.uspto.gov

Paper No. 4

THOMAS, KAYDEN, HORSTEMEYER & RISLEY, LLP
100 GALLERIA PARKWAY, NW
STE 1750
ATLANTA GA 30339-5948

COPY MAILED

MAY 2 1 2003

OFFICE OF PETITIONS

In re Application of	:	
James S. Davis	:	
Application No. 10/369,417	:	DECISION GRANTING
Filed: February 18, 2003	:	PETITION
Attorney Docket No. 81607-1250	:	
Title: USER INTERFACE FOR MONITORING REMOTE DEVICES	:	

This is a decision on the "Petition to Accept Drawing Figs. 2-6 and Accord Filing Date", which is properly treated as a petition under 37 CFR §1.53(b), requesting that Figures 2-6 be accorded a filing date of February 18, 2003, as part of the original disclosure.

On February 18, 2003, the above-identified application was filed. On April 8, 2003, the Office of Initial Patent Examination (OIPE) mailed a "Notice of Omitted Item(s) in a Nonprovisional Application" (Notice), stating that the application had been accorded a filing date of February 18, 2003, and advising applicant that Figures 2-6 appeared to have been omitted.

In response, on April 23, 2003, applicants filed the present petition. The petition is further accompanied by a copy of applicants' postcard receipt acknowledging receipt of twenty-one (21) pages of drawings in the United States Patent and Trademark Office (Office) on February 18, 2003. Applicants request Figures 2-6 be accorded a filing date of February 18, 2003.

Upon review of the record, Figures 2-6 have not been located among the application papers. However, the evidence is convincing that the application papers deposited on February 18, 2003, included Figures 2-6, and the sheets containing these Figures were subsequently misplaced in the Office. Therefore, the application, including Figures 2-6, was complete on filing and entitled to a filing date of February 18, 2003.

Accordingly, the petition is **GRANTED**.

The Notice mailed April 8, 2003 was sent in error and is hereby **VACATED**. Therefore, no petition fee is necessary. The petition fee of $130 will be refunded to petitioner's Deposit Account, as authorized in the petition, as this petition was necessitated by an error on the part of the Office.

The application file is being returned to the Office of Initial Patent Examination for further processing with a filing date of February 18, 2003, using Figures 1 and 7-21, which have been located in the file, as well as Figures 2-6, submitted on April 23, 2003.

Any inquiries related to this decision should be directed to Petitions Attorney Paul Shanoski at (703) 305-0011.

Beverly Flanagan
Supervisory Petitions Examiner
Office of Petitions
Office of the Deputy Commissioner
for Patent Examination Policy

UNITED STATES PATENT AND TRADEMARK OFFICE

APP 20 2005

Commissioner for Patents
United States Patent and Trademark Office
P.O. Box 1450
Alexandria, VA 22313-1450
www.uspto.gov

STEPHEN A. BENT
FOLEY & LARDNER, LLP
3000 K STREET, NW
SUITE 500
WASHINGTON, DC 20007-5101

In re Application of	:
Fred H. MIller	:
Serial No.: 10/369,427	: DEFERRAL OF EXAMINATION
Filed: February 18, 2003	:
Attorney Docket No.: 027668-0101	:

This is in reply to the petition under 37 CFR 1.103(d) to defer action on this application at applicant's request, filed March 24, 2005.

A review of the file history shows that this is an as yet unexamined patent application. Applicants request that action on this application be suspended in accordance with 37 CFR 1.103(d).

> **§ 1.103 Suspension of action by the Office.**
>
> (d) *Deferral of examination.* On request of the applicant, the Office may grant a deferral of examination under the conditions specified in this paragraph for a period not extending beyond three years from the earliest filing date for which a benefit is claimed under title 35, United States Code. A request for deferral of examination under this paragraph must include the publication fee set forth in § 1.18(d) and the processing fee set forth in § 1.17(i). A request for deferral of examination under this paragraph will not be granted unless:
> (1) The application is an original utility or plant application filed under § 1.53(b) or resulting from entry of an international application into the national stage after compliance with § 1.495;
> (2) The applicant has not filed a nonpublication request under § 1.213(a), or has filed a request under § 1.213(b) to rescind a previously filed nonpublication request;
> (3) The application is in condition for publication as provided in § 1.211(c); and
> (4) The Office has not issued either an Office action under 35 U.S.C. 132 or a notice of allowance under 35 U.S.C. 151.

Applicants meet all the criteria set forth above.

The petition is **GRANTED**. Action on this application is deferred until February 18, 2006, unless applicant requests earlier examination.

Should there be any questions with respect to this action, please contact the examiner or William R. Dixon, Jr., by mail addressed to: Director, Technology Center 1600, P. O. BOX 1450, ALEXANDRIA, VA 22313-1450, or by telephone at 571-272-0519 or by facsimile transmission at Office general facsimile number, 571-273-8300.

Bruce M. Kisliuk
Director, Technology Center 1600

UNITED STATES PATENT AND TRADEMARK OFFICE

UNITED STATES DEPARTMENT OF COMMERCE
United States Patent and Trademark Office
Address: COMMISSIONER FOR PATENTS
P.O. Box 1450
Alexandria, Virginia 22313-1450
www.uspto.gov

RONALD I. EISENSTEIN
NIXON PEABODY LLP
100 SUMMER STREET
BOSTON, MA 02110

Mail Date: 04/21/2010

Applicant	: James L. Sherley	: DECISION ON REQUEST FOR
Patent Number	: 7645610	: RECALCULATION of PATENT
Issue Date	: 01/12/2010	: TERM ADJUSTMENT IN VIEW
Appliction No	: 10/369,428	: OF WYETH AND NOTICE OF INTENT TO
Filed	: 02/18/2003	: ISSUE CERTIFICATE OF CORRECTION
		:

The Request for Recalculation is **GRANTED** to the extent indicated.

The patent term adjustment has been determined to be **0** days. The USPTO will *sua sponte* issue a certificate of correction reflecting the amount of PTA days determined by the recalculation.

Prior to the issuance of the certificate of correction, the USPTO will afford patentee an opportunity to be heard and request reconsideration. Accordingly, patentee has **one month or thirty (30) days**, whichever is longer, to file a request for reconsideration of this patent term adjustment calculation. See 35 U.S.C. 154(b)(3)(B)(ii) and 37 CFR 1.322(a)(4). No extensions of time will be granted under 37 CFR 1.136.

Patentee should use document code PET.OP if electronically filing a request for reconsideration of this patent term adjustment calculation. The patentee must also include the information required by 37 CFR 1.705(b)(2) and the fee required by 37 CFR 1.18(e). If patentee does not file a timely request for reconsideration of this patent term adjustment calculation including the information required by 37 CFR 1.705(b)(2) and the fee required by 37 CFR 1.18(e), the USPTO will issue a certificate of correction reflecting the PTA determination noted above.

Patentee should be aware that in order to preserve the right to review in the United States District Court for the District of Columbia of the USPTO patent term adjustment determination, patentee must ensure that he or she also take the steps required under 35 U.S.C. 154(b)(4)(A) in a timely manner. Nothing in the request for recalculation should be construed as providing an alternative time frame for commencing a civil action under 35 U.S.C. 154(b)(4)(A).

Any questions concerning this decision should be directed to the Office of Patent Legal Administration at 571-272-7702.

UNITED STATES PATENT AND TRADEMARK OFFICE

Commissioner for Patents
United States Patent and Trademark Office
P.O. Box 1450
Alexandria, VA 22313-1450
www.uspto.gov

HOWARD J. GREENWALD P.C.
349 W. COMMERCIAL STREET
SUITE 2490
EAST ROCHESTER, NY 14445-2408

COPY MAILED

JUN 15 2006

OFFICE OF PETITIONS

In re Application of	:	
Jeffrey L. Helfer et al	:	
Application No. 10/369,429	:	DECISION ON PETITION
Filed: February 19, 2003	:	TO WITHDRAW
Attorney Docket No. JLH-103	:	FROM RECORD
	:	

This is a decision on the Request to Withdraw as attorney or agent of record under 37 C.F.R. § 1.36(b), filed September 30, 2005.

The request is **NOT APPROVED** as moot.

A review of the file record indicates that the power of attorney to Howard J. Greenwald and all the attorneys/agents of record associated with customer No. 37282 have been revoked by the assignee of the patent application on April 11, 2006. Accordingly, the request to withdraw under 37 C.F.R. § 1.36(b) is moot.

All future communications from the Office will continue to be directed to the below-listed address until otherwise notified by applicants.

This application is being referred to Technology Center AU 3737 for examination in due course.

Telephone inquires concerning this decision should be directed to Wan Laymon at 571-272-3220.

Amelia Au
Petitions Examiner
Office of Petitions

cc: BASCH & NICKERSON
1777 PENFIELD ROAD
PENFIELD, NY 14526

#5

UNITED STATES PATENT AND TRADEMARK OFFICE

Commissioner for Patents
United States Patent and Trademark Office
P.O. Box 1450
Alexandria, VA 22313-1450
www.uspto.gov

ANTHONY EDW. J CAMPBELL
PO BOX 160370
AUSTIN TX 78716

COPY MAILED

MAR 01 2007

OFFICE OF PETITIONS

In re Application of
Geier
Application No. 10/369,485
Filed: February20, 2003
Attorney Docket No.:MMB362

DECISION ON PETITION

This is a decision on the petition under 37 CFR 1.137(b), filed August 18, 2006, to revive the above-identified application.

This above-identified application became abandoned for failure to timely file a reply to a Restriction Requirement mailed October 24, 2003. The Office Action set a one (1) month shortened statutory period for reply. No extensions of time were obtained under the provisions of 37 CFR 1.136(a). Accordingly, this application became abandoned on November 25, 2003. A Notice of Abandonment was mailed on June 4, 2004.

This petition is hereby **GRANTED**.

The Office hereby acknowledges the receipt of the Response to the Restriction Requirement submitted with the instant petition.

This application is being forwarded to Technology Center 3600 for further processing.

Telephone inquiries concerning this matter should be directed to the undersigned at (571) 272-3215.

Charlema R. Grant

Charlema R. Grant
Petitions Attorney
Office of Petitions

SPE RESPONSE FOR CERTIFICATE OF CORRECTION

Paper No.:031805

DATE : March 21, 2005

TO SPE OF : ART UNIT 2827

SUBJECT : Request for Certificate of Correction on Patent No.: 6,717,879

A response is requested with respect to the accompanying request for a certificate of correction.

Please complete this form and return with file, within **7** days to:
Certificates of Correction Branch - PK 3-910
Palm location **7590** - Tel. No. 305-8201

With respect to the change(s) requested, correcting Office and/or Applicant's errors, should the patent read as shown in the certificate of correction? No new matter should be introduced, nor should the scope or meaning of the claims be changed.

Thank You For Your Assistance **Certificates of Correction Branch**

The request for issuing the above-identified correction(s) is hereby:
Note your decision on the appropriate box.

☒ **Approved** **All** changes apply.

☐ **Approved in Part** Specify below which changes **do not** apply.

☐ **Denied** State the reasons for denial below.

Comments:

SPE: Hoai Ho **Art Unit** 2827

UNITED STATES PATENT AND TRADEMARK OFFICE

COMMISSIONER FOR PATENTS
UNITED STATES PATENT AND TRADEMARK OFFICE
P.O. BOX 1450
ALEXANDRIA, VA 22313-1450
WWW.USPTO.GOV

Paper No. 4

OGILVY RENAULT
1981 McGILL COLLEGE AVENUE
SUITE 1600
MONTREAL, QUEBEC, H3A 2Y3
CANADA

COPY MAILED
JUN 1 2 2003
OFFICE OF PETITIONS

In re Application of :
Steve Kresnyak et al :
Application No. 10/369,511 : NOTICE
Filed: February 21, 2003 :
Attorney Docket No. 9-16066-4US-1 :

This is a notice regarding your request for acceptance of a fee deficiency submission under 37 CFR 1.28. On September 1, 1998, the Court of Appeals for the Federal Circuit held that 37 CFR 1.28(c) is the sole provision governing the time for correction of the erroneous payment of the issue fee as a small entity. **See DH Technology v. Synergystex International, Inc. 154 F.3d 1333, 47 USPQ2d 1865 (Fed. Cir. Sept. 1, 1998).**

The Office no longer investigates or rejects original or reissue applications under 37 CFR 1.56. **1098 Off. Gaz. Pat. Office 502 (January 3, 1989)**. Therefore, nothing in this Notice is intended to imply that an investigation was done.

Your fee deficiency submission under 37 CFR 1.28 is hereby **ACCEPTED**.

Inquiries related to this communication should be directed to the Office of Petitions Staff at (703) 305-9285.

This file is being forwarded to Technology Center AU 1714.

Wan Laymon
Petitions Examiner
Office of Petitions
Office of the Deputy Commissioner
for Patent Examination Policy

SPE RESPONSE FOR CERTIFICATE OF CORRECTION 10/369518

Paper No.: _____

DATE : 12/13/05

TO SPE OF : ART UNIT 3751

SUBJECT : Request for Certificate of Correction on Patent No.: 6892997 B2

A response is requested with respect to the accompanying request for a certificate of correction.

Please complete this form and return with file, within **7** days to:
Palm location **7580, Certificates of Correction Branch – South Tower – 9A22**
If response is for an IFW, **return to employee (named below) via PUBSCofC Team in MADRAS.**
With respect to the change(s) requested, correcting Office and/or Applicant's errors, should the patent read as shown in the certificate of correction (COCIN)? No new matter should be introduced, nor should the scope or meaning of the claims be changed.

Virginia Tolbert

Thank You For Your Assistance

Certificates of Correction Branch
Tel. No. 703-308-9390 ext. 113

The request for issuing the above-identified correction(s) is hereby:
Note your decision on the appropriate box.

- [x] **Approved** — **All** changes apply.
- [ ] **Approved in Part** — Specify below which changes **do not** apply.
- [ ] **Denied** — State the reasons for denial below.

Comments:

SPE

3751
Art Unit

UNITED STATES PATENT AND TRADEMARK OFFICE

Commissioner for Patents
United States Patent and Trademark Office
P.O. Box 1450
Alexandria, VA 22313-1450
www.uspto.gov

KRAMER & AMADO, P.C.
1725 DUKE STREET
SUITE 240
ALEXANDRIA VA 22314

MAILED

MAR 16 2009

OFFICE OF PETITIONS

In re Application of	:	
Carl Rajsic	:	
Application No. 10/369,539	:	DECISION ON PETITION
Filed: February 21, 2003	:	
Attorney Docket No. ALC 3440	:	

This is a decision on the petition under the unintentional provisions of 37 CFR 1.137(b), filed February 25, 2009, to revive the above-identified application.

The petition is **GRANTED**.

The petition satisfies the conditions for revival pursuant to the provisions of 37 CFR 1.137(b) in that (1) the reply in the form of an RCE and an amendment; (2) the petition fee; and (3) the required statement of unintentional delay have been received. Accordingly, the reply to the final rejection mailed May 1, 2008, is accepted as having been unintentionally delayed.

Telephone inquiries concerning this decision should be directed to the undersigned at (571) 272-3208.

This application is being referred to Technology Center AU 2419 for appropriate action by the Examiner in the normal course of business on the reply received February 25, 2009.

Karen Creasy

Karen Creasy
Petitions Examiner
Office of Petitions

UNITED STATES PATENT AND TRADEMARK OFFICE

Commissioner for Patents
United States Patent and Trademark Office
P.O. Box 1450
Alexandria, VA 22313-1450
www.uspto.gov

INVITROGEN CORPORATION
C/O INTELLEVATE
P.O. BOX 52050
MINNEAPOLIS MN 55402

COPY MAILED

JUL 3 1 2008

OFFICE OF PETITIONS

In re Application of	:	
Updyke et al.	:	
Application No. 10/369,541	:	LETTER REGARDING
Filed: February 21, 2003	:	PATENT TERM ADJUSTMENT
Attorney Docket No. IVGN 293.8	:	
CON	:	

This is in response to the "PETITION FOR PATENT TERM ADJUSTMENT PURSUANT TO 37 C.F.R.§1.705(b)," filed February 28, 2008. Applicant requests that the determination of patent term adjustment under 35 U.S.C. § 154(b) be reviewed for accuracy.

The request for review of the patent term adjustment is **GRANTED**.

The Office has updated the PAIR screen to reflect that the correct Patent Term Adjustment (PTA) determination at the time of the mailing of the Notice of Allowance is seven hundred seventy one **(771)** days. A copy of the updated PAIR screen, showing the correct determination, is enclosed.

On November 28, 2007, the Office mailed the Determination of Patent Term Adjustment under 35 U.S.C. 154(b) in the above-identified application. The Notice stated that the patent term adjustment to date is 771 days.

Applicants question whether a reduction of 88 days is required for the submission of the Request for Continued Examination (RCE) and amendment pursuant to 37 CFR 1.114 on August 27, 2007.

A review of the application history confirms an error. Additional periods of reduction totalling 113 days should have been entered. A ninety one-day period for reduction should have

been taken based upon 37 CFR §1.704(b). 37 CFR §1.704(b) provides:

> an applicant shall be deemed to have failed to engage in reasonable efforts to conclude processing or examination of an application for the cumulative total of any periods of time in excess of three months that are taken to reply to any notice or action by the Office making any rejection, objection, argument, or other request, measuring such three-month period from the date the notice or action was mailed or given to the applicant, in which case the period of adjustment set forth in §1.703 shall be reduced by the number of days, if any, beginning on the day after the date that is three months after the date of mailing or transmission of the Office communication notifying the applicant of the rejection, objection, argument, or other request and ending on the date the reply was filed.

In this instance, the three-month period for filing a reply to the February 28, 2007 final Office action ended on May 28, 2007. A reply in compliance with 37 CFR §1.113(c) to the Office action in the form of a Request for Continued Examination (RCE) was not received in the Office until August 27, 2007. Thus, a 91-day reduction should have been taken.

A period of reduction of 22 days should have been entered based on 37 CFR 1.704(c)(8). 37 CFR §1.704(c)(8) provides that a period of reduction is entered for:

> Circumstances that constitute a failure of the applicant to engage in reasonable efforts to conclude processing or examination of an application also include the following circumstances, which will result in the following reduction of the period of adjustment set forth in § 1.703 to the extent that the periods are not overlapping:
>
> > (8) Submission of a supplemental reply or other paper, other than a supplemental reply or other paper expressly requested by the examiner, after a reply has been filed, in which case the period of adjustment set forth in § 1.703 shall be reduced by the number of days, if any, beginning on the day after the date the initial reply was filed and ending on the date that the supplemental reply or other such paper was filed;

In this instance, after the filing of a response on August 27, 2007, on September 18, 2007, applicants filed a supplemental response in the form of a supplemental reply to the final Office action. The record supports a conclusion that the additional response was not expressly requested by the examiner. Accordingly, the PTA should have been reduced by 22 days, the number of days beginning on the day after the date the initial reply was filed, August 27, 2007, and ending on the date that the supplemental reply or other such paper was filed, September 18, 2007.

In view thereof, the correct determination of PTA at the time of the mailing of the notice of allowance is SIX HUNDRED FIFTY EIGHT (658) days.

As this letter was submitted as an advisement to the Office of an error against applicants' favor, the Office will not assess the $200.00 fee under 37 CFR 1.18(e). The Office thanks applicants for their good faith and candor in bringing this to the attention of the Office.

The address given on the petition differs from the address of record. If appropriate, a change of address should be filed in accordance with MPEP 601.03. A courtesy copy of this decision is being mailed to the address given on the petition. However, the Office will mail all future correspondence solely to the address of record.

The application is being forwarded to the Office of Data Management for issuance of a patent. The patent term adjustment indicated on the patent (as shown on the Issue Notification mailed about three weeks prior to patent issuance) will include any additional adjustment accrued both for Office delay in issuing the patent more than four months after payment of the issue fee and satisfaction of all outstanding requirements, and for the Office taking in excess of three years to issue the patent (to the extent that the three-year period does not overlap with periods already accorded).

Telephone inquiries specific to this matter should be directed to the Petitions Attorney Charlema Grant at (571) 272-3215.

Nancy Johnson
Senior Petitions Attorney
Office of Petitions

Enclosure: Copy of REVISED PALM Screen

Day : Wednesday

PALM INTRANET

Date: 7/30/2008
Time: 18:01:15

PTA Calculations for Application: 10/369541			
Application Filing Date:	02/21/2003	PTO Delay (PTO):	827
Issue Date of Patent:		Three Years:	0
Pre-Issue Petitions:	0	Applicant Delay (APPL):	56
Post-Issue Petitions:	0	Total PTA (days):	658
PTO Delay Adjustment:	-113		

File Contents History

Number	Date	Contents Description	PTO	APPL	START
80	07/30/2008	ADJUSTMENT OF PTA CALCULATION BY PTO		22	
79	07/30/2008	ADJUSTMENT OF PTA CALCULATION BY PTO		91	
67	11/28/2007	MAIL NOTICE OF ALLOWANCE			
66	11/28/2007	MAIL EXAMINER'S AMENDMENT			
65	11/13/2007	ISSUE REVISION COMPLETED			
64	11/07/2007	ALLOWED CASE RETURNED TO THE EXAMINER FOR CLERICAL PROCESSING			
63	11/07/2007	DOCUMENT VERIFICATION			
62	11/06/2007	NOTICE OF ALLOWANCE DATA VERIFICATION COMPLETED			
61	11/06/2007	CASE DOCKETED TO EXAMINER IN GAU			
60	11/05/2007	EXAMINER'S AMENDMENT COMMUNICATION			
59	11/05/2007	NOTICE OF ALLOWABILITY			
58	09/18/2007	AFFIDAVIT(S) (RULE 131 OR 132) OR EXHIBIT(S) RECEIVED			
57	10/05/2007	CASE DOCKETED TO EXAMINER IN GAU			
56	09/24/2007	DATE FORWARDED TO EXAMINER			
55	09/18/2007	SUPPLEMENTAL RESPONSE			
54	09/18/2007	NEW OR ADDITIONAL DRAWING FILED			
53	12/22/2006	INFORMATION DISCLOSURE STATEMENT CONSIDERED			
52	12/22/2006	INFORMATION DISCLOSURE STATEMENT CONSIDERED			
51	12/22/2006	INFORMATION DISCLOSURE STATEMENT (IDS) FILED			
50	12/22/2006	INFORMATION DISCLOSURE STATEMENT (IDS) FILED			
49	08/28/2007	DATE FORWARDED TO EXAMINER			

48	08/27/2007	AMENDMENT SUBMITTED/ENTERED WITH FILING OF CPA/RCE			
47	08/28/2007	DATE FORWARDED TO EXAMINER			
46	08/27/2007	REQUEST FOR CONTINUED EXAMINATION (RCE)			
45	08/28/2007	DISPOSAL FOR A RCE/CPA/129 (EXPRESS ABANDONMENT IF CPA)			
44	08/27/2007	REQUEST FOR EXTENSION OF TIME - GRANTED			
43	08/27/2007	WORKFLOW - REQUEST FOR RCE - BEGIN			
42	07/16/2007	CORRESPONDENCE ADDRESS CHANGE			
41	07/05/2007	CORRESPONDENCE ADDRESS CHANGE			
40	02/28/2007	MAIL FINAL REJECTION (PTOL - 326)			
39	02/27/2007	FINAL REJECTION			
38	12/22/2006	INFORMATION DISCLOSURE STATEMENT CONSIDERED			
37	07/27/2006	INFORMATION DISCLOSURE STATEMENT CONSIDERED			
36	01/29/2007	CORRESPONDENCE ADDRESS CHANGE			
35	01/29/2007	CHANGE IN POWER OF ATTORNEY (MAY INCLUDE ASSOCIATE POA)			
34	12/28/2006	PARALEGAL TD ACCEPTED			
33	12/22/2006	TERMINAL DISCLAIMER FILED		0	30
32	12/22/2006	AFFIDAVIT(S) (RULE 131 OR 132) OR EXHIBIT(S) RECEIVED			
31	12/27/2006	DATE FORWARDED TO EXAMINER			
30	12/22/2006	RESPONSE AFTER NON-FINAL ACTION		56	26
29	12/22/2006	REQUEST FOR EXTENSION OF TIME - GRANTED			
28.7	12/22/2006	INFORMATION DISCLOSURE STATEMENT (IDS) FILED			
28	12/22/2006	INFORMATION DISCLOSURE STATEMENT (IDS) FILED			
27.7	07/27/2006	INFORMATION DISCLOSURE STATEMENT (IDS) FILED			
27	07/27/2006	INFORMATION DISCLOSURE STATEMENT (IDS) FILED			
26	07/27/2006	MAIL NON-FINAL REJECTION	827		-1
25	07/24/2006	NON-FINAL REJECTION			
24	03/28/2006	INFORMATION DISCLOSURE STATEMENT CONSIDERED			

23	09/30/2005	INFORMATION DISCLOSURE STATEMENT CONSIDERED			
22	08/20/2003	INFORMATION DISCLOSURE STATEMENT CONSIDERED			
21	03/24/2004	INFORMATION DISCLOSURE STATEMENT CONSIDERED			
20	05/07/2003	INFORMATION DISCLOSURE STATEMENT CONSIDERED			
19	07/06/2006	PRELIMINARY AMENDMENT			
18.7	03/28/2006	INFORMATION DISCLOSURE STATEMENT (IDS) FILED			
18	03/28/2006	INFORMATION DISCLOSURE STATEMENT (IDS) FILED			
17	10/19/2005	PRELIMINARY AMENDMENT			
16	09/30/2005	REFERENCE CAPTURE ON IDS			
15.7	09/30/2005	INFORMATION DISCLOSURE STATEMENT (IDS) FILED			
15	09/30/2005	INFORMATION DISCLOSURE STATEMENT (IDS) FILED			
14	04/15/2005	PRELIMINARY AMENDMENT			
13.7	03/24/2004	INFORMATION DISCLOSURE STATEMENT (IDS) FILED			
13	03/24/2004	INFORMATION DISCLOSURE STATEMENT (IDS) FILED			
12	12/08/2003	IFW TSS PROCESSING BY TECH CENTER COMPLETE			
11	12/08/2003	REFERENCE CAPTURE ON IDS			
10.7	08/20/2003	INFORMATION DISCLOSURE STATEMENT (IDS) FILED			
10	08/20/2003	INFORMATION DISCLOSURE STATEMENT (IDS) FILED			
9.7	05/07/2003	INFORMATION DISCLOSURE STATEMENT (IDS) FILED			
9	05/07/2003	INFORMATION DISCLOSURE STATEMENT (IDS) FILED			
8	05/07/2003	PRELIMINARY AMENDMENT			
7	02/21/2003	PRELIMINARY AMENDMENT			
6	04/01/2003	CASE DOCKETED TO EXAMINER IN GAU			
5	03/26/2003	APPLICATION DISPATCHED FROM OIPE			
4	03/25/2003	APPLICATION IS NOW COMPLETE			
2	03/06/2003	IFW SCAN & PACR AUTO SECURITY REVIEW			

1	02/21/2003	INITIAL EXAM TEAM NN			

Search Another: Application# Search

EXPLANATION OF PTA CALCULATION

EXPLANATION OF PTE CALCULATION

To go back, right click here and select Back. To go forward, right click here and select Forward. To refresh, right click here and select Refresh.

Back to OASIS | Home page

UNITED STATES PATENT AND TRADEMARK OFFICE

#5

Commissioner for Patents
United States Patent and Trademark Office
P.O. Box 1450
Alexandria, VA 22313-1450
www.uspto.gov

MAILED
FROM DIRECTORS OFFICE

MAY 18 2006

TECHNOLOGY CENTER 3600

Shun-Ming Liu
P.O. Box 6-57
Chung-Ho
Taipei, 235
TAIWAN

In re Application of Shun-Ming Liu Application No. 10/369,545 Filed: February 21, 2003	: : : : :	DECISION ON PETITION TO WITHDRAW THE HOLDING OF ABANDONMENT

For: DUAL POWER PROTECTIVE DEVICE FOR POWER SUPPLY

This is in response to applicant's petition to withdraw the holding of abandonment, filed in the United States Patent and Trademark Office (USPTO) on June 2, 2005, September 9, 2005 and May 2, 2006.

The petition is **DISMISSED**.

A review of the file records reveals that the application was held abandoned for failure to timely file a reply to the non-final Office action mailed December 11, 2003. A Notice to that effect was mailed June 17, 2004.

Applicant states that the Office action mailed December 11, 2003 was not received.

There is a strong presumption that mail properly addressed and delivered to the United States Postal Service was in fact delivered to the addressee. An allegation that an Office communication was not received may be considered in a formal petition for the withdrawal of the holding of abandonment, in accordance with *Delgar Inc. v. Schuyler*, 172 USPQ 513. However, the presumption that the Office communication was delivered to applicant may be overcome by a showing that the communication was not, in fact, received as indicated below.

Since the application is pro se, statements of non-receipt should include a statement by the applicant, and by anyone else at applicant's correspondence

address, who would have handled the Office communication, and include any available documentary evidence of mail received, covering a reasonable period after the date of the Office communication, to show non-receipt of the communication in question. Copies of records on which the receipt date of the Office communication would have been entered had it been received, (*e.g.*, a copy of the outside of the file maintained by applicant), are required if available. Also, a showing of any docket records *or other method* which would serve as a reminder of a response due date should be submitted. Whatever method applicant uses as a reminder, and submits in response to this decision should be adequately explained. Also, a statement is required that a search of the file maintained by applicant, or any other location where correspondence from the USPTO is kept, failed to find a copy of the Office communication in question. Finally, applicant must state that he was in fact at the correspondence address of record at the time the Office action would have been received.

Any such exhibits should be submitted as part of statement(s) showing that no Office communication was ever received.

Applicant's petition includes a statement by the inventor and the local agent responsible for the mail, but does not include a showing of any method that serves as a reminder that a response is due. Further, the page titled "Summary Confirmation Page" included with the May 2, 2006 submission is not understood.

Any request for reconsideration of this decision must be submitted within **TWO (2) MONTHS** from the mail date of this decision. Extensions of time under 37 CFR 1.136(a) are permitted. The reconsideration request should include a cover letter entitled "Renewed Petition Under 37 CFR 1.181" and should be mailed to the Deputy Commissioner for Patent Examination Policy, P.O. Box 1450, Alexandria, VA 22313-1450.

Randolph A. Reese

Randolph A. Reese
Special Programs Examiner
Patent Technology Center 3600
(571) 272-6619

RAR/js: 5/12/06

UNITED STATES PATENT AND TRADEMARK OFFICE

Commissioner for Patents
United States Patent and Trademark Office
P.O. Box 1450
Alexandria, VA 22313-1450
www.uspto.gov

Shun-Ming Liu
P.O. Box No. 6-57
Chung-Ho
Taipei 235 TW TAIWAN
AIRMAIL

COPY MAILED

JUL 19 2006

OFFICE OF PETITIONS

In re Application of :
Liu :
Application No. 10/369,545 : ON PETITION
Filed: February 21, 2003 :
Title of Invention: Dual Power Protective Device :
For Power Supply :

This is a decision on the renewed petition under 37 CFR 1.181 to withdraw the holding of abandonment, filed June 15, 2006.

The petition to withdraw the holding of abandonment is **Dismissed**.

Any request for reconsideration should be filed within **TWO MONTHS** of the mailing date of this decision in order to be considered timely. 37 CFR 1.181(f). This time period may not be extended pursuant to 37 CFR 1.136.

This application became abandoned for failure to timely submit a reply to the non-final Office Action mailed December 11, 2003. The Notice set an extendable 3 month period for reply. No extensions of time pursuant to 37 CFR 1.136(a) were obtained. Accordingly, this application was held abandoned on March 11, 2004. A Notice of Abandonment was mailed on June 17, 2004.

Petitioner contends the non-final office action mailed on December 11, 2003 was not received.

A review of the record indicates no irregularity in the mailing of the Notice, and in the absence of any irregularity in the mailing, there is a strong presumption that the Notice of Allowance was properly mailed to the address of record. This presumption may be overcome by a showing that the Notice was not in fact received. The showing required to establish the failure to receive an Office communication must include a statement from the practitioner stating that the Office communication was not received by the practitioner and attesting to the fact that a search of the file jacket and docket records indicates that the Office communication was not received. A copy of the docket record where the non-received Office communication would have been entered had it been received and docketed must be attached to and referenced in practitioner's statement.

For example, if a three month period for reply was set in the nonreceived non-final office action, a copy of the docket report showing all replies docketed for a date three months from the mail date of the nonreceived non-final office action must be submitted as documentary proof of nonreceipt of the non-final office action.[1] The showing outlined above may not be sufficient if there are circumstances that point to a conclusion that the non-final office action may have been lost after receipt rather than a conclusion that the non-final office action was lost in the mail.

Where applicant is pro se applicant should demonstrate what system is in place upon receipt of communication from the USPTO. If applicant retains documents in a central location, makes use of a computer program or calendar such information as well as any accompanying evidence should be provided on renewed petition. A pro se applicant must state that the file was searched and that the communication in question has not been located. The Office is looking for applicant to make a showing that the communication was not lost after receipt.

Petitioner has made the statement that the non-final office action was not received, petitioner has provided statements by the inventor and the agent responsible for handling mail. Petitioner has also provided a copy of a deadline control sheet which serves as a reminder of a response due date.

However, petitioner has only provided docket reports for the months of December and January 2003. The Office requires docket reports for February 2003.

On renewed petition, petitioner should submit the docket records for February 2003 to cover the entire shortened reply period set in the non-final Office Action.

Further correspondence with respect to this matter should be addressed as follows:

By mail:	Mail Stop Petition Commissioner for Patents P.O. Box 1450 Alexandria, VA 22313-1450
By facsimile:	(571) 273-8300
By delivery service: (FedEx, UPS, DHL, etc.)	U.S. Patent and Trademark Office Customer Service Window, Randolph Building 401 Dulany Street Alexandria, VA 22314

[1]M.P.E.P. § 711.03(c); See Notice entitled "Withdrawing the Holding of Abandonment When Office Actions Are Not Received," 1156 O.G. 53 (November 16, 1993).

Telephone inquiries related to this decision may be directed to the undersigned at (571) 272-3215.

Charlema R. Grant
Petitions Attorney
Office of Petitions

UNITED STATES PATENT AND TRADEMARK OFFICE

Commissioner for Patents
United States Patent and Trademark Office
P.O. Box 1450
Alexandria, VA 22313-1450
www.uspto.gov

Shun-Ming Liu
P.O. Box No. 6-57
Chung-Ho
Taipei 235 TW TAIWAN
AIRMAIL

COPY MAILED

SEP 18 2006

OFFICE OF PETITIONS

ON PETITION

In re Application of :
Liu :
Application No. 10/369,545 :
Filed: February 21, 2003 :
Title of Invention: Dual Power Protective :
Device For Power Supply :

This is a decision on the renewed petition under 37 CFR 1.181 to withdraw the holding of abandonment, filed August 28, 2006.

The petition to withdraw the holding of abandonment is **Granted**.

This application became abandoned for failure to timely submit a reply to the non-final Office Action mailed December 11, 2003. The Notice set an extendable 3 month period for reply. No extensions of time pursuant to 37 CFR 1.136(a) were obtained. Accordingly, this application was held abandoned on March 11, 2004. A Notice of Abandonment was mailed on June 17, 2004. Petitions under 37 CFR 1.181 were dismissed on May 18, 2006 and July 19, 2006.

Petitioner asserts that the non-final Office Action mailed on December 11, 2003 was never received. Petitioner states a search of the file jacket and docket records confirms the non-final Office Action was not received. In support of petitioner's contention, a copy of the docket records has been provided. Petitioner has also provided a statement by the local agent.

This application is being forwarded to Art Unit 3676 for re-mailing of the non-final Office Action to the current correspondence address of record. The three month time period for reply will be set to run from the mailing date of the new Office Communication.

Telephone inquiries related to this decision may be directed to the undersigned at (571) 272-3215.

Charlema R. Grant

Charlema R. Grant
Petitions Attorney
Office of Petitions

UNITED STATES PATENT AND TRADEMARK OFFICE

Commissioner for Patents
United States Patent and Trademark Office
P.O. Box 1450
Alexandria, VA 22313-1450
www.uspto.gov

LEVINE BAGADE HAN LLP
2483 EAST BAYSHORE ROAD
SUITE 100
PALO ALTO CA 94303

COPY MAILED

JUL 06 2007

OFFICE OF PETITIONS

In re Application of	:	
Daniel Rogers Burnett	:	
Application No. 10/369,550	:	DECISION ON PETITION
Filed: February 21, 2003	:	TO WITHDRAW
Attorney Docket No. TN 1001-US	:	FROM RECORD
	:	

This is a decision on the Request to Withdraw as attorney or agent of record under 37 C.F.R. § 1.36(b) filed January 23, 2007.

The request is **DISMISSED** as moot.

A review of the file record indicates that the power of attorney to Levine, Bagade & Han, LLP has been revoked by the applicant of the patent application on March 12, 2007. Accordingly, the request to withdraw under 37 C.F.R. § 1.36(b) is moot.

All future communications from the Office will continue to be directed to the below-listed address until otherwise notified by applicant.

Telephone inquires concerning this decision should be directed to undersigned at 571-272-1642.

April M. Wise
Petitions Examiner
Office of Petitions

cc: LUCE, FORWARD HAMILTON & SCRIPPS
DEL MAR GATEWAY
11988 EL CAMINO REAL
SUITE 200
SAN DIEGO, CA 92130-2592

UNITED STATES PATENT AND TRADEMARK OFFICE

UNITED STATES DEPARTMENT OF COMMERCE
United States Patent and Trademark Office
Address: COMMISSIONER FOR PATENTS
P.O. Box 1450
Alexandria, Virginia 22313-1450
www.uspto.gov

APPLICATION NUMBER	FILING OR 371 (c) DATE	FIRST NAMED APPLICANT	ATTY. DOCKET NO./TITLE
10/369,550	02/21/2003	Daniel Rogers Burnett	TN 1001-US

CONFIRMATION NO. 5722

OC000000024632469

40518
LEVINE BAGADE HAN LLP
2483 EAST BAYSHORE ROAD, SUITE 100
PALO ALTO, CA 94303

Date Mailed: 07/02/2007

NOTICE REGARDING CHANGE OF POWER OF ATTORNEY

This is in response to the Power of Attorney filed 03/12/2007.

- The Power of Attorney to you in this application has been revoked by the applicant. Future correspondence will be mailed to the new address of record(37 CFR 1.33).

April M Reese

Office of Initial Patent Examination (571) 272-4000, or 1-800-PTO-9199
FORMER ATTORNEY/AGENT COPY

UNITED STATES PATENT AND TRADEMARK OFFICE

Commissioner for Patents
United States Patent and Trademark Office
P.O. Box 1450
Alexandria, VA 22313-1450
www.uspto.gov

Paper No. None

John C. Kerins
P.O. Box 2905
Reston VA 20195

COPY MAILED

JUL 19 2005

OFFICE OF PETITIONS

In re Application of :
Morris Taylor Murray et al. :
Application No. 10/369,561 :
Filed: February 21, 2003 :
Attorney Docket No.: T3023-908332 :
Title: ALUMINIUM PRESSURE CASTING :

DECISION ON PETITION UNDER
37 C.F.R. §1.137(b)

This is a decision on the petition under 37 CFR §1.137(b)[1], filed April 29, 2005, to revive the above-identified application.

The above-identified application became abandoned for failure to reply within the meaning of 37 CFR §1.112 in a timely manner to the non-final Office action mailed May 13, 2004, which set a shortened statutory period for reply of 3 months. No response, and no extensions of time were received. Accordingly, the above-identified application became abandoned on August 14, 2004. A Notice of Abandonment was mailed on December 15, 2004.

With the present petition, Petitioner has submitted the petition fee, an amendment, and the proper statement of unintentional delay.

Petitioner has also submitted a three-month extension of time. An extension of time under 37 C.F.R. §1.136 must be filed prior to the expiration of the maximum extendable period for reply[2]. Accordingly, since the three-month extension of time submitted with the petition on April 29, 2005 was subsequent to the maximum extendable period for reply, this fee is unnecessary and will be credited to petitioner's Deposit Account.

---

1 A grantable petition pursuant to 37 CFR 1.137(b) must be accompanied by:
(1) The reply required to the outstanding Office action or notice, unless previously filed;
(2) The petition fee as set forth in § 1.17(m);
(3) A statement that the entire delay in filing the required reply from the due date for the reply until the filing of a grantable petition pursuant to this paragraph was unintentional. The Commissioner may require additional information where there is a question whether the delay was unintentional, and;
(4) Any terminal disclaimer (and fee as set forth in § 1.20(d)) required pursuant to paragraph (d) of this section.

2 See In re Application of S., 8 USPQ2d 1630, 1631 (Comm'r Pats. 1988).

Petitioner has met all requirements for a grantable petition under 37 C.F.R. §1.137(b). As such, the petition is **GRANTED**. Telephone inquiries regarding *this decision* should be directed to the undersigned at (571) 272-3225. All other inquiries concerning examination procedures or status of the application should be directed to the Technology Center.

Paul Shanoski
Senior Attorney
Office of Petitions
United States Patent and Trademark Office

10/369,564

Copy 1 CC

Sterne Kessler Goldstein Fox
ATTORNEYS AT LAW

Robert Greene Sterne
Edward J. Kessler
Jorge A. Goldstein
David K.S. Cornwell
Robert W. Esmond
Tracy-Gene G. Durkin
Michele A. Cimbala
Michael B. Ray
Robert E. Sokohl
Eric K. Steffe
Michael Q. Lee
Steven R. Ludwig
John M. Covert
Linda E. Alcorn
Robert C. Millonig
Donald J. Featherstone
Timothy J. Shea, Jr
Michael V. Messinger
Judith U. Kim
Patrick E. Garrett
Jeffrey T. Helvey
Heidi L. Kraus
Eldora L. Ellison
Thomas C. Fiala
Albert L. Ferro
Donald R. Banowit
Peter A. Jackman
Jeffrey S. Weaver
Kendrick P. Patterson
Vincent L. Capuano
Brian J. Del Buono
Virgil Lee Beaston
Theodore A. Wood
Elizabeth J. Haanes
Joseph S. Ostroff
Frank R. Cottingham
Rae Lynn P. Guest
George S. Bardmesser
Daniel A. Klein
Jason D. Eisenberg
Michael D. Specht
Andrea J. Kamage
Tracy L. Mueller
Jon E. Wright
LuAnne M. DeSantis
Ann E. Summerfield
Aric W. Ledford
Helene C. Carlson
Cynthia M. Bouchez
Timothy A. Doyle
Gaby L. Longsworth
Lori A. Gordon
Nicole D. Dretar
Ted J. Ebersole
Laura A. Vogel
Michael J. Mancuso
Bryan S. Wade
Aaron L. Schwartz
Michael G. Pena*
Shannon A. Carroll*
Wesley W. Jones*
Matthew E. Kelley*
Nicole R. Kramer*
Michelle K. Holoubek*
Marsha A. Rose*

Registered Patent Agents•
Karen R. Markowicz
Nancy J. Leith
Matthew J. Dowd
Katrina Yujian Pei Quach
Bryan L. Skelton
Robert A. Schwartzman
Teresa A. Colella
Victoria S. Rutherford
Simon J. Elliott
Julie A. Heider
Mita Mukherjee
Scott M. Woodhouse
Christopher J. Walsh
Liliana Di Nola-Baron
Peter A. Socarras
Jeffrey Mills

Of Counsel
Kenneth C. Bass III
Marvin C. Guthrie

*Admitted only in Maryland
*Admitted only in Virginia
•Practice Limited to Federal Agencies

OIPE IAP13 SEP 07 2005 PATENT & TRADEMARK OFFICE

September 7, 2005

WRITER'S DIRECT NUMBER:
(202) 772-8783
INTERNET ADDRESS:
RGUEST@SKGF.COM

BEST AVAILABLE COPY

Commissioner for Patents
PO Box 1450
Alexandria, VA 22313-1450

Art Unit 1722

Attn: Certificate of Correction Branch

Re: U.S. Utility Patent
Patent No. 6,921,259; Issued: July 26, 2005
For: **Valve Pin Guide for a Valve-Gated Nozzle**
Inventors: SICILIA *et al.*
Our Ref: 2107.1050001

Certificate
SEP 12 2005
of Correction

OK TO ENTER TWH 10-5-05

Sir:

Transmitted herewith for appropriate action are the following documents:

1. Request for Certificate of Correction Under 37 C.F.R. § 1.323 For Applicant's Mistake;
2. Certificate of Correction;
3. Credit Card Payment Form (PTO-2038) in the amount of $100.00 to cover the Certificate of Correction Fee Under 37 C.F.R. § 1.20(a); and
4. Return postcard.

It is respectfully requested that the attached postcard be stamped with the date of filing of these documents, and that it be returned to our courier. In the event that extensions of time are necessary to prevent abandonment of this patent application, then such extensions of time are hereby petitioned.

The U.S. Patent and Trademark Office is hereby authorized to charge any fee deficiency, or credit any overpayment, to our Deposit Account No. 19-0036.

Respectfully submitted,

09/08/2005 SSITHIB1 00000063 6921259
01 FC:1811 100.00 OP

STERNE, KESSLER, GOLDSTEIN & FOX P.L.L.C.

Rae Lynn P. Guest

Rae Lynn P. Guest
Attorney for Patentees
Registration No. 53,482

SEP 13 2005

LEA/RPG/dbj
Enclosures

440107_1.DOC

UNITED STATES PATENT AND TRADEMARK OFFICE

COMMISSIONER FOR PATENTS
UNITED STATES PATENT AND TRADEMARK OFFICE
P.O. BOX 1450
ALEXANDRIA, VA 22313-1450
www.uspto.gov

STERNE, KESSLER, GOLDSTEIN & FOX PLLC
1100 NEW YORK AVENUE, N.W.
WASHINGTON, DC 20005

COPY MAILED

FEB 0 2 2005

OFFICE OF PETITIONS

In re Application of :
Daniel N. Galburt, et al. :
Application No. 10/369,569 : ON PETITION
Filed: February 21, 2003 :
Attorney Docket No. 1857.0370001 :

This is a decision on the petition, filed February 1, 2005, under 37 CFR 1.313(c)(2) to withdraw the above-identified application from issue after payment of the issue fee.

The petition is **GRANTED**.

The above-identified application is withdrawn from issue for consideration of a submission under 37 CFR 1.114 (request for continued examination). See 37 CFR 1.313(c)(2).

Petitioner is advised that the issue fee paid on December 2, 2004, in the above-identified application cannot be refunded. If, however, the above-identified application is again allowed, petitioner may request that it be applied towards the issue fee required by the new Notice of Allowance. [1]

Telephone inquiries relating to this decision should be directed to the undersigned at (571) 272-3204.

The application is being referred to Technology Center AU 2851 for further processing of the request for continued examination under 37 CFR 1.114.

Sherry D. Brinkley
Petitions Examiner
Office of Petitions
Office of the Deputy Commissioner
for Patent Examination Policy

[1]The request to apply the issue fee to the new Notice may be satisfied by completing and returning the new Issue Fee Transmittal Form PTOL-85(b), which includes the following language thereon: "Commissioner for Patents is requested to apply the Issue Fee and Publication Fee (if any) or re-apply any previously paid issue fee to the application identified above." Petitioner is advised that, whether a fee is indicated as being due or not, the Issue Fee Transmittal Form **must** be completed and timely submitted to avoid abandonment. Note the language in bold text on the first page of the Notice of Allowance and Fee(s) Due (PTOL-85).

UNITED STATES PATENT AND TRADEMARK OFFICE

COMMISSIONER FOR PATENTS
UNITED STATES PATENT AND TRADEMARK OFFICE
P.O. BOX 1450
ALEXANDRIA, VA 22313-1450
www.uspto.gov

STERNE, KESSLER, GOLDSTEIN & FOX PLLC
1100 NEW YORK AVENUE, N.W.
WASHINGTON, DC 20005

COPY MAILED
APR 13 2006
OFFICE OF PETITIONS

In re Application of :
Daniel N. Galburt, et al. :
Application No. 10/369,569 : ON PETITION
Filed: February 21, 2003 :
Attorney Docket No.: 1857.0370001 :

This is a decision on the petition, filed April 12, 2006, under 37 CFR 1.313(c)(2) to withdraw the above-identified application from issue after payment of the issue fee.

The petition is **GRANTED**.

The above-identified application is withdrawn from issue for consideration of a submission under 37 CFR 1.114 (request for continued examination). See 37 CFR 1.313(c)(2).

Petitioner is advised that the issue fee paid on October 13, 2005, in the above-identified application cannot be refunded. If, however, the above-identified application is again allowed, petitioner may request that it be applied towards the issue fee required by the new Notice of Allowance. [1]

Telephone inquiries relating to this decision should be directed to the undersigned at (571) 272-3204.

The application is being referred to Technology Center AU 2851 for further processing of the request for continued examination under 37 CFR 1.114.

Sherry D. Brinkley
Petitions Examiner
Office of Petitions

[1]The request to apply the issue fee to the new Notice may be satisfied by completing and returning the new Issue Fee Transmittal Form PTOL-85(b), which includes the following language thereon: " Commissioner for Patents is requested to apply the Issue Fee and Publication Fee (if any) or re-apply any previously paid issue fee to the application identified above." Petitioner is advised that, whether a fee is indicated as being due or not, the Issue Fee Transmittal Form **must** be completed and timely submitted to avoid abandonment. Note the language in bold text on the first page of the Notice of Allowance and Fee(s) Due (PTOL-85).

10/369593

SPE RESPONSE FOR CERTIFICATE OF CORRECTION

Paper No.: ——

DATE : 1/26/05

TO SPE OF : ART UNIT 1723

SUBJECT : Request for Certificate of Correction on Patent No.: 6808793 B2

A response is requested with respect to the accompanying request for a certificate of correction.

Please complete this form and return with file, within **7** days to:
Certificates of Correction Branch - PK 3-915
Palm location **7580** - Tel. No. 305-8309

With respect to the change(s) requested, correcting Office and/or Applicant's errors, should the patent read as shown in the certificate of correction? No new matter should be introduced, nor should the scope or meaning of the claims be changed.

Virginia Tolbert

Thank You For Your Assistance

Certificates of Correction Branch

The request for issuing the above-identified correction(s) is hereby:
Note your decision on the appropriate box.

- ☒ **Approved** — All changes apply.
- ☐ **Approved in Part** — Specify below which changes **do not** apply.
- ☐ **Denied** — State the reasons for denial below.

Comments:

Carl Charney

SPE

1773

Art Unit

UNITED STATES PATENT AND TRADEMARK OFFICE

Commissioner for Patents
United States Patent and Trademark Office
P.O. Box 1450
Alexandria, VA 22313-1450
www.uspto.gov

mb

Mailed: 7-16-07

In re application of :
Takahashi et al. : DECISION ON
Serial No. 10/369,596 : PETITION
Filed: February 21, 2003 :
For: LITHIUM SECONDARY BATTERY FOR MOUNTING ON SUBSTRATE

This is a decision on the PETITION UNDER 37 CFR 1.181 TO WITHDRAW THE FINALITY OF THE OFFICE ACTION mailed May 18, 2007.

On December 4, 2006, a non-final office action was mailed by the examiner, rejecting all of the claims present in the application. Applicants responded to this office action with arguments filed on March 5, 2007. A final rejection was then mailed May 18, 2007, repeating the rejections of all the claims.

On May 21, 2007, the instant petition under 37 CFR 1.181 was filed to formally request the withdrawal of finality of the May 18, 2007 office action.

Applicant's position for the withdrawal of the finality is that the examiner did not fully address all of the arguments and evidence presented in the response of March 5, 2007. Accordingly, it is urged by petitioner that the final office action is incomplete.

DECISION

Section 707.07(f) of the MPEP states:

707.07(f) [R-3] Answer All Material Traversed
In order to provide a complete application file history and to enhance the clarity of the prosecution history record, an examiner must provide clear explanations of all actions taken by the examiner during prosecution of an application. Where the requirements are traversed, or suspension thereof requested, the examiner should make proper reference thereto in his or her action on the amendment. Where the applicant traverses any rejection, the examiner should, if he or she repeats the rejection, take note of the applicant's argument and answer the substance of it. If applicant's arguments are persuasive and upon reconsideration of the rejection, the examiner determines that the previous rejection should be withdrawn, the examiner must provide in the next Office communication the reasons why the previous rejection is withdrawn by referring specifically to the page(s) and line(s) of applicant's remarks which form the basis for withdrawing the rejection. It is not acceptable for the examiner to merely indicate that all of applicant's remarks form the basis for withdrawing the previous rejection. Form paragraph 7.38.01 may be used. If the withdrawal of the previous rejection results in the allowance of the claims, the reasons, which form the basis for the withdrawal of the previous rejection, may be included in a reasons for allowance. See MPEP § 1302.14. If

applicant's arguments are persuasive and the examiner determines that the previous rejection should be withdrawn but that, upon further consideration, a new ground of rejection should be made, form paragraph 7.38.02 may be used. See MPEP § 706.07(a) to determine whether the Office action may be made final.

In the non-final office action mailed December 4, 2006, the examiner rejected all claims under 35 USC 103. In the response filed by applicants, arguments were made against the obviousness rejection and evidence in the form of comparative data was presented to support the arguments. This data was presented by the applicant as a direct rebuttal of the examiner's obviousness position. In the examiner's final rejection, applicant's arguments were not completely addressed. The examiner did not address the comparative data presented by the applicant in the response of March 5, 2007. The office action was therefore incomplete.

Because the record does not clearly point out and state the examiner's position on several issues raised by applicant, the finality of the office action is premature. This application is being forwarded to the examiner in order to prepare a new office action clearly stating the positions of the examiner regarding the arguments and evidence set forth by applicant. Accordingly, the petition for withdrawal of finality is **GRANTED**

Jacqueline M. Stone

Jacqueline M. Stone, Director
Technology Center 1700
Chemical and Materials Engineering

RONALD J. KUBOVCIK
KUBOVCIK & KUBOVCIK
THE FARRAGUT BUILDING
SUITE 710
900 17TH STREET, N.W.
WASHINGTON, DC 20006

UNITED STATES PATENT AND TRADEMARK OFFICE

Pet. Dec.

Commissioner for Patents
United States Patent and Trademark Office
P.O. Box 1450
Alexandria, VA 22313-1450
www.uspto.gov

Mailed: JUL 1 4 2005

dss

Paper No.

In re application of
Raymond J. Gorte et al.
Serial No. 10/369,598
Filed: February 21, 2003
For: POROUS ELECTRODE, SOLID OXIDE FUEL CELL, AND METHOD OF PRODUCING SAME

DECISION ON PETITION

This is a decision on the PETITION TO WITHDRAW HOLDING OF ABANDONMENT, filed April 15, 2005 and resubmitted May 18, 2005, for failure to pay the required issue fee in response to the Notice of Allowance, dated December 03, 2004. Petitioner contends that the said Allowance was never received.

DECISION

Since petitioner asserts that the Notice of Allowance was never received, the request is accepted as a petition under 37 C.F.R. 1.181 (no fee). A review of the file and petitioner's evidence provided with the instant petition indicates that the request has merit.

Submitted as evidence is 1) a statement that no such Office Action was ever received, 2) a statement that a review of the file record was made, but the Action not found, and 3) submission of a copy of the docket records, showing that the Office Action was not received.

Therefore, the Abandonment, effective April 18, 2005 is hereby withdrawn.

The Petition is **GRANTED.**

The case will be delivered to the LIE and returned to pending status. After such is completed, the Notice of Allowance dated December 03, 2004 will be remailed and time period for Issue Fee payment will be restarted.

Jacqueline Stone, Director
Technology Center 1700
Chemical and Materials Engineering

Hunton & Williams
Intellectual Property Department
1900 K Street, NW
Washington, D.C. 20006-1109

UNITED STATES PATENT AND TRADEMARK OFFICE

Commissioner for Patents
United States Patent and Trademark Office
P.O. Box 1450
Alexandria, VA 22313-1450
www.uspto.gov

BIRCH STEWART KOLASCH & BIRCH
PO BOX 747
FALLS CHURCH VA 22040-0747

COPY MAILED

APR 25 2007

OFFICE OF PETITIONS

In re Application of	:	
Sadamu Kuse, et al.	:	
Application No. 10/369,606	:	DECISION GRANTING PETITION
Filed: February 21, 2003	:	UNDER 37 CFR 1.313(c)(2)
Attorney Docket No. 0020-5116P	:	

This is a decision on the petition under 37 CFR 1.313(c)(2), filed April 24, 2007, to withdraw the above-identified application from issue after payment of the issue fee.

The petition is **GRANTED**.

The above-identified application is withdrawn from issue for consideration of a submission under 37 CFR 1.114 (request for continued examination). *See* 37 CFR 1.313(c)(2).

Petitioner is advised that the issue fee paid on March 19, 2007 cannot be refunded. If, however, this application is again allowed, petitioner may request that it be applied towards the issue fee required by the new Notice of Allowance.[1]

Telephone inquiries regarding this decision should be directed to April Wise at (571) 272-1642.

This application is being referred to Technology Center AU 1773 for processing of the request for continued examination under 37 CFR 1.114 and for consideration of the concurrently filed information disclosure statement.

Frances Hicks

Frances M. Hicks
Petitions Examiner
Office of Petitions

[1] *The request to apply the issue fee to the new Notice may be satisfied by completing and returning the new Part B – Fee(s) Transmittal Form (along with any balance due at the time of submission). Petitioner is advised that the Issue Fee Transmittal Form* ***must*** *be completed and timely submitted to avoid abandonment of the application.*

UNITED STATES PATENT AND TRADEMARK OFFICE

Commissioner for Patents
United States Patent and Trademark Office
P.O. Box 1450
Alexandria, VA 22313-1450
www.uspto.gov

MICHELE B. HOLDEN
HONEYWELL INTERNATIONAL INC., PATENT SERVICES
LAW DEPT. AB2
P.O. BOX 2245
MORRISTOWN, NJ 07962-2245

MAILED

APR 0 9 2009

OFFICE OF PETITIONS

In re Application of	:	
Khaled A. **ARISHA**	:	
Application No. 10/369,607	:	DECISION ON PETITION
Filed: February 21, 2003	:	UNDER 37 CFR 1.313(c)(3)
Attorney Docket No. **H0004296**	:	

This is a decision on the petition, filed April 7, 2009, under 37 CFR 1.313(c)(3) to withdraw the above-identified application from issue after payment of the issue fee.

The petition is **DISMISSED**.

The petition to withdraw from issue is accompanied by a letter of express abandonment. However, the letter of express abandonment is not signed by an attorney of record.

37 CFR 1.33(b) states:

> "*Amendments and other papers*. Amendments and other papers, except for written assertions pursuant to § 1.27(c)(2)(ii) of this part, filed in the application must be signed by:
>
> (1) A patent practitioner of record appointed in compliance with § 1.32(b);
> (2) A patent practitioner not of record who acts in a representative capacity under the provisions of § 1.34;
> (3) An assignee as provided for under § 3.71(b) of this chapter; or
> (4) All of the applicants (§ 1.41(b)) for patent, unless there is an assignee of the entire interest and such assignee has taken action in the application in accordance with § 3.71 of this chapter."

37 CFR 1.138(b) states:

> "A written declaration of abandonment must be signed by a party authorized under § 1.33(b)(1), (b)(3), or (b)(4) to sign a paper in the application, except as otherwise provided in this paragraph. A registered attorney or agent, not of record, who acts in a representative capacity under the provisions of § 1.34 when filing a continuing application, may expressly abandon the prior application as of the filing date granted to the continuing application."

37 CFR 1.138(b) expressly excludes, under 37 CFR 1.33(b)(2), a patent practitioner not of record who acts in a representative capacity under 37 CFR 1.34 from signing a letter of express abandonment, except as provided for *supra*.

Therefore, for the reason stated above, the petition under 37 CFR 1.313(c)(3) cannot be granted until such time as a letter of express abandonment signed by an attorney of record is received. The letter of express abandonment should be submitted with a renewed petition under 37 CFR 1.313(c)(3). Petitioner is reminded that the express abandonment and petition to withdraw from issue may not be recognized or effective if not received by the appropriate deciding official in time to act prior to issuance. *Note* 37 CFR 1.313(d). It is recommended that the renewed petition to withdraw from issue and letter of express abandonment be transmitted by facsimile to the number indicated below.

As noted above, petitioner herein is not an attorney of record. Therefore, if petitioner desires to receive future correspondence regarding this application, the appropriate power of attorney documents must be submitted. A courtesy copy of this decision is being mailed to petitioner. However, until a proper power of attorney is received, all future correspondence regarding this application will be mailed solely to the address of record.

Further correspondence with respect to this matter should be addressed as follows:

By mail: Mail Stop PETITIONS
Commissioner for Patents
Post Office Box 1450
Alexandria, VA 22313-1450

By hand: Customer Service Window
Mail Stop Petitions
Randolph Building
401 Dulany Street
Alexandria, VA 22314

By fax: **(571) 273-0025**
Office of Petitions

Any questions concerning this matter may be directed to the undersigned at (571) 272-7253.

/Monica A. Graves/
Petitions Examiner, Office of Petitions

cc: **JON M. POWERS**
FOGG & POWERS, LLC
5810 W. 78TH STREET
MINNEAPOLIS, MN 55439

UNITED STATES PATENT AND TRADEMARK OFFICE

Commissioner for Patents
United States Patent and Trademark Office
P.O. Box 1450
Alexandria, VA 22313-1450
www.uspto.gov

HONEYWELL INTERNATIONAL INC.
101 COLUMBIA ROAD
P O BOX 2245
MORRISTOWN, NJ 07962-2245

MAILED

APR 23 2009

OFFICE OF PETITIONS

In re Application of	:	
Khaled A. ARISHA	:	
Application No. 10/369,607	:	DECISION GRANTING PETITION
Filed: February 21, 2003	:	UNDER 37 CFR 1.313(c)(3)
Attorney Docket No. **H0004296.35535(5708)4**	:	

This is a decision on the renewed petition, filed April 15, 2009, under 37 CFR 1.313(c)(3) to withdraw the above-identified application from issue after payment of the issue fee.

The petition is **GRANTED**.

Petitioner requests that the above-identified application be withdrawn from issue for express abandonment. *See* 37 CFR 1.313(c)(3).

The application is hereby withdrawn from issue, and the abandonment is hereby recognized.

The application file does not indicate a change of address has been filed in this case, although the address given on the petition differs from the address of record. A change of address should be filed in this case in accordance with MPEP 601.03. A courtesy copy of this decision is being mailed to the address noted on the petition. However, until otherwise instructed, all future correspondence regarding this application will be mailed solely to the address of record.

Telephone inquiries should be directed to the undersigned at (571) 272-7253.

/Monica A. Graves/
Petitions Examiner, Office of Petitions

cc: **FOGG & POWERS, LLP**
5810 W. 78TH STREET
MINNEAPOLIS, MN 55439

UNITED STATES PATENT AND TRADEMARK OFFICE

UNITED STATES DEPARTMENT OF COMMERCE
United States Patent and Trademark Office
Address: COMMISSIONER FOR PATENTS
P.O. Box 1450
Alexandria, Virginia 22313-1450
www.uspto.gov

DICKSTEIN SHAPIRO LLP
1825 EYE STREET NW
Washington, DC 20006-5403

Mail Date: 07/26/2010

Applicant	: Yuki Kitamura	: DECISION ON REQUEST FOR
Patent Number	: 7650363	: RECALCULATION of PATENT
Issue Date	: 01/19/2010	: TERM ADJUSTMENT IN VIEW
Application No	: 10/369,622	: OF WYETH AND NOTICE OF INTENT TO
Filed	: 02/21/2003	: ISSUE CERTIFICATE OF CORRECTION
		:

The Request for Recalculation is **GRANTED** to the extent indicated.

The patent term adjustment has been determined to be **555** days. The USPTO will *sua sponte* issue a certificate of correction reflecting the amount of PTA days determined by the recalculation.

Prior to the issuance of the certificate of correction, the USPTO will afford patentee an opportunity to be heard and request reconsideration. Accordingly, patentee has **one month or thirty (30) days**, whichever is longer, to file a request for reconsideration of this patent term adjustment calculation. See 35 U.S.C. 154(b)(3)(B)(ii) and 37 CFR 1.322(a)(4). No extensions of time will be granted under 37 CFR 1.136.

Patentee should use document code PET.OP if electronically filing a request for reconsideration of this patent term adjustment calculation. The patentee must also include the information required by 37 CFR 1.705(b)(2) and the fee required by 37 CFR 1.18(e). If patentee does not file a timely request for reconsideration of this patent term adjustment calculation including the information required by 37 CFR 1.705(b)(2) and the fee required by 37 CFR 1.18(e), the USPTO will issue a certificate of correction reflecting the PTA determination noted above.

Patentee should be aware that in order to preserve the right to review in the United States District Court for the District of Columbia of the USPTO patent term adjustment determination, patentee must ensure that he or she also take the steps required under 35 U.S.C. 154(b)(4)(A) in a timely manner. Nothing in the request for recalculation should be construed as providing an alternative time frame for commencing a civil action under 35 U.S.C. 154(b)(4)(A).

Any questions concerning this decision should be directed to the Office of Patent Legal Administration at 571-272-7702.

UNITED STATES PATENT AND TRADEMARK OFFICE

Commissioner for Patents
United States Patent and Trademark Office
P.O. Box 1450
Alexandria, VA 22313-1450
www.uspto.gov

ROSENBERG KLEIN & LEE
3458 ELLICOTT CENTER DRIVE
SUITE 101
ELLICOTT CITY, MD 21043

COPY MAILED

SEP 13 2005

OFFICE OF PETITIONS

In re Application of	:	
Shui Jung Chen	:	
Application No. 10/369,669	:	ON PETITION
Filed: February 21, 2003	:	
Attorney Docket No. MR2863-92	:	

This is a decision on the petition under 37 CFR 1.137(b), filed August 9, 2005, to revive the above-identified application.

The petition is **GRANTED**.

The above-identified application became abandoned for failure to submit the issue fee/publication fee in a timely manner in reply to the Notice of Allowance mailed March 15, 2005, which set a statutory period for reply of three (3) months. Accordingly, the above-identified application became abandoned on June 16, 2005.

Telephone inquiries concerning this decision should be directed to Wan Laymon at (571) 272-3220.

This matter is being referred to Publishing Division.

Wan Laymon
Petitions Examiner
Office of Petitions
Office of the Deputy Commissioner
for Patent Examination Policy

UNITED STATES PATENT AND TRADEMARK OFFICE

Commissioner for Patents
United States Patent and Trademark Office
P.O. Box 1450
Alexandria, VA 22313-1450
www.uspto.gov

DAVID CHIOU
14TH FLOOR
ONE BROADWAY
CAMBRIDGE MA 02142

COPY MAILED

MAY 13 2009

OFFICE OF PETITIONS

In re Application of	:	
Chiou et al.	:	
Application No. 10/369,678	:	ON PETITION
Filed: February 21, 2003	:	
Attorney Docket No. GRN.001	:	

This is a decision on the petition under 37 C.F.R. § 1.137(b), filed February 9, 2009, to revive the above-identified application.

The petition is **GRANTED**.

The petition satisfies the requirements of 37 CFR 1.137(b) in that petitioner has supplied (1) the reply in the form of an Amendment, (2) the petition fee, and (3) a proper statement of unintentional delay.

There is no indication that the person signing the instant petition was ever given a power of attorney or authorization of agent to prosecute the above-identified application. If the person signing the instant petition desires to receive future correspondence regarding this application, the appropriate power of attorney or authorization of agent must be submitted. While a courtesy copy of this decision is being mailed to the person signing the instant petition, all future correspondence will be directed solely to the address currently of record until such time as appropriate instructions are received to the contrary.

It is not apparent whether the statement of unintentional delay was signed by a person who would have been in a position of knowing that the entire delay in filing the required reply from the due date for the reply until the filing of a grantable petition pursuant to 37 CFR 1.137(b) was unintentional. Nevertheless, in accordance with 37 CFR 10.18, the statement is accepted as constituting a certification of unintentional delay. However, in the event that petitioner has no knowledge that the delay was unintentional, petitioner must make such an inquiry to ascertain that, in fact, the delay was unintentional. If petitioner discovers that the delay was intentional, petitioner must notify the Office.

Telephone inquiries concerning this decision should be directed to the undersigned at (571) 272-3206.

This matter is being referred to Technology Center AU 2616 for further examination on the merits.

Liana Walsh
Petitions Examiner
Office of Petitions

cc: RAYMOND SUN
12420 WOODHALL WAY
TUSTIN, CA 92782

UNITED STATES PATENT AND TRADEMARK OFFICE

Commissioner for Patents
United States Patent and Trademark Office
P.O. Box 1450
Alexandria, VA 22313-1450
www.uspto.gov

COPY MAILED

AUG 0 6 2007

OFFICE OF PETITIONS

REED SMITH LLP
3110 FAIRVIEW PARK DRIVE, SUITE 1400
FALLS CHURCH VA 22042

In re Patent No. 7,031,119 :
Issued: April 18, 2006 :
Application No. 10/369,682 : ON PETITION
Filed: February 21, 2003 :
Attorney Docket Number: HITA.0347 :

This is a decision on the petition, filed April 19, 2007 under 37 CFR 1.183, to correct the assignee's name on the front of the Patent, which is being treated as a request under 37 CFR 3.81(b)[1].

The petition is **GRANTED**.

Petitioner seeks to have the name of the assignee corrected on the face of the patent. Petitioner does not indicate that the failure to include the correct assignee name on the Fee(s) Transmittal form PTOL-85(b) was inadvertent however it will be so construed. Petitioner must notify the Office if this is **not** a correct interpretation of the statement contained in the petition.

37 CFR 3.81(b), effective June 25, 2004, reads:

> *After payment of the issue fee:* Any request for issuance of an application in the name of the assignee submitted after the date of payment of the issue fee, and any request for a patent to be corrected to state the name of the assignee, must state that the assignment was submitted for recordation as set forth in § 3.11 before issuance of the patent, and must include a request for a certificate of correction under § 1.323 of this chapter (accompanied by the fee set forth in § 1.20(a) and the processing fee set forth in § 1.17(i) of this chapter.

A request for certificate of correction (and fee) was filed September 1, 2006 and dismissed in a decision mailed November 16, 2006 since the request was not accompanied by a petition under 37 CFR 1.183.

---

[1] *See* Official Gazette of June 22, 2004

Office assignment records however, reflect that HITACHI GLOBAL STORAGE TECHNOLOGIES JAPAN, LTD. Is the assignee of record. Accordingly, as the request complies with the provisions of 37 CFR 3.81(b), it would be appropriate for a certificate of correction to issue.

The petition fee and the fee for the certificate of correction have been properly posted to the finance records for this patent.

Inquiries concerning this decision should be directed to the undersigned at (571) 272-3212. Any questions concerning the issuance of a certificate of correction should be directed to the Certificates of Correction Branch at (703) 305-8309.

This file is being referred to the Certificates of Correction Branch for issuance of a certificate of correction.

Patricia Faison-Ball

Patricia Faison-Ball
Senior Petitions Attorney
Office of Petitions

UNITED STATES PATENT AND TRADEMARK OFFICE

COMMISSIONER FOR PATENTS
UNITED STATES PATENT AND TRADEMARK OFFICE
P.O. BOX 1450
ALEXANDRIA, VA 22313-1450
www.uspto.gov

MATTINGLY, STANGER, MALUR & BRUNDIDGE, P.C.
1800 DIAGONAL ROAD
SUITE 370
ALEXANDRIA VA 22314

MAILED

APR 19 2005

Technology Center 2100

In re Application of: Hara, et al.
Application No. 10/369,690
Filed: February 21, 2003
For: SNAPSHOT CREATING METHOD AND APPARATUS

DECISION ON PETITION
TO MAKE SPECIAL
(ACCELERATED EXAMINATION)
UNDER M.P.E.P. §708.02 (VIII)

This is a response to the petition filed 01 July 2004 under 37 C.F.R. §1.102(d) and M.P.E.P. §708.02 (VIII): Accelerated Examination, to make the above-identified application special.

The Petition is **DISMISSED**.

M.P.E.P. §708.02, Section VIII which sets out the prerequisites for a grantable petition for Accelerated Examination under 37 C.F.R. §1.102(d) states in relevant part:

A new application (one which has not received any examination by the examiner) may be granted special status provided that applicant (and this term includes applicant's attorney or agent) complies with each of the following items:

(a) Submits a petition to make special accompanied by the fee set forth in **37 CFR 1.17(h)**;

(b) Presents all claims directed to a single invention, or if the Office determines that all the claims presented are not obviously directed to a single invention, will make an election without traverse as a prerequisite to the grant of special status;

(c) Submits a statement(s) that a pre-examination search was made, listing the field of search by class and subclass, publication, Chemical Abstracts, foreign patents, etc. The pre-examination search must be directed to the invention as claimed in the application for which special status is requested. A search made by a foreign patent office satisfies this requirement;

(d) Submits one copy each of the references deemed most closely related to the subject matter encompassed by the claims if said references are not already of record; and

(e) Submits a detailed discussion of the references, which discussion points out, with the particularity required by 37 CFR 1.111 (b) and (c), how the claimed subject matter is patentable over the references.

In those instances where the request for this special status does not meet all the prerequisites set forth above, **applicant will be notified and the defects in the request will be stated**. The application will remain in the status of a new application awaiting action in its regular turn. In those instances where a request is defective in one or more respects, applicant will be given one opportunity to perfect the request in a renewed petition to make special. If perfected, the request will then be granted. If not perfected in the first renewed petition, any additional renewed petitions to make special may or may not be considered at the discretion of the Technology Center (TC) Special Program Examiner.

The petition filed 01 July 2004 fails to adequately meet requirement (e) of the criteria set forth above. The discussion of the references does not point out with the particularity required by 37 CFR 1.111(b) and (c) how the claimed subject matter is patentable over the references. The discussion fails to point out how each reference defines over each independent claim. For example, the discussion states that

[t]he above described features of the present invention, particularly the provision of the data-block analyzing units for receiving data-block information so as to store the data-block information into a storage region, wherein the data-block information indicates which of a plurality of data-block is a useful data block for the 1st data storage <u>and</u> wherein the data-block analyzing unity has a plurality of bits each corresponding to the plurality of data blocks in the 1st data storage and sets a bit when receiving the data-block information, said bit corresponding to the data block among the plurality of bits are not taught or suggested by any of the references of record whether taken individually or in combination with each other. (emphasis added)

However, it is not clear that any of the claims contains this combination of features. Petitioner should ensure that the above discussion is directed to how the language of **each** of the independent claims is **specifically** distinguishable and patentable from **each** of the references provided in requirement (d) above.

Petition to Make Special **<u>DISMISSED</u>**.

Petitioner is given one opportunity to perfect the petition. Any request for reconsideration must be filed within TWO MONTHS of the mail date of this decision.

Until the renewed petition is submitted, the application will be returned to the examiner's docket to await treatment on the merits in the normal order of examination.

Pinchus M. Laufer
Special Program Examiner
Technology Center 2100
Computer Architecture, Software and Information Security
571-272-3599

UNITED STATES PATENT AND TRADEMARK OFFICE

Commissioner for Patents
United States Patent and Trademark Office
P.O. Box 1450
Alexandria, VA 22313-1450
www.uspto.gov

MATTINGLY, STANGER, MALUR & BRUNDIDGE, P.C.
1800 DIAGONAL ROAD
SUITE 370
ALEXANDRIA VA 22314

MAILED

JUL 28 2005

Technology Center 2100

In re Application of: HARA, et al.
Application No. 10/369,690
Filed: February 21, 2003
For: SNAPSHOT CREATING METHOD AND APPARATUS

DECISION ON PETITION FOR ACCELERATED EXAMINATION UNDER M.P.E.P.§708.02(VIII)

This is a decision on the renewed request for reconsideration of petition(s) filed on June 20, 2005 under 37 C.F.R. 102(d) and M.P.E.P. § 708.02(VIII): Accelerated Examination, to make the above-identified application special.

The Petition is **GRANTED**.

M.P.E.P. § 708.02, Section VIII which sets out the prerequisites for a grantable petition for Accelerated Examination under 37 C.F.R. § 102(d) states in relevant part:

A new application (one which has not received any examination by the examiner) may be granted special status provided that applicant (and this term includes applicant's attorney or agent) complies with each of the following items:

(a) Submits a petition to make special accompanied by the fee set forth in 37 CFR 1.17(h);

(b) Presents all claims directed to a single invention, or if the Office determines that all the claims presented are not obviously directed to a single invention, will make an election without traverse as a prerequisite to the grant of special status;

(c) Submits a statement(s) that a pre-examination search was made, listing the field of search by class and subclass, publication, Chemical Abstracts, foreign patents, etc. The pre-examination search must be directed to the invention as claimed in the application for which special status is requested. A search made by a foreign patent office satisfies this requirement;

(d) Submits one copy each of the references deemed most closely related to the subject matter encompassed by the claims if said references are not already of record; and

(e) Submits a detailed discussion of the references, which discussion points out, with the particularity required by 37 CFR 1.111 (b) and (c), how the claimed subject matter is patentable over the references.

Petition to Make Special **GRANTED** since all of the requirements for special status under MPEP § 708.02(VIII) have been met.

The application file is being forwarded to the Examiner for accelerated examination in accordance with the procedures set forth in M.P.E.P. §708.02, Section VIII. If the application is subsequently allowed, it will be given priority for printing. See M.P.E.P. §1309.

Brian L. Johnson
Special Program Examiner
Technology Center 2100
Computer Architecture, Software and Information Security
571-272-3595

RP

UNITED STATES PATENT AND TRADEMARK OFFICE

Commissioner for Patents
United States Patent and Trademark Office
P.O. Box 1450
Alexandria, VA 22313-1450
www.uspto.gov

MICROPYRETICS HEATERS INTERNATIONAL, INC.
750 REDNA TERRACE
CINCINNATI OH 45215

COPY MAILED

FEB 21 2006

OFFICE OF PETITIONS

ON PETITION

In re Application of
Jainagesh Sekhar :
Application No. 10/369,700 :
Filed: February 21, 2003 :
Title of Invention: **TREATMENT FOR IMPROVING THE STABILITY OF SILICON CARBIDE HEATING ELEMENTS** :

This is a decision on the petition under 37 CFR 1.137(b)[1], filed February 9, 2006, to revive the above identified application.

The petition is **DISMISSED**.

Any request for reconsideration of this decision must be submitted within TWO (2) MONTHS from the mail date of this decision. Extensions of time under 37 CFR 1.136(a) are permitted. The reconsideration request should include a cover letter entitled "Renewed Petition under 37 CFR 1.137(b)".This is **not** a final agency decision.

This application became abandoned October 11, 2005 for failure to timely pay the issue fee in response to the Notice of Allowance mailed July 9, 2005. The instant petition and this decision precede the mailing of the Notice of Abandonment.

Pursuant to 37 CFR 1.137(b) however, the instant petition lacks item (2) of the regulation.

---

[1]Effective December 1, 1997, the provisions of 37 CFR 1.137(b) now provide that where the delay in reply was unintentional, a petition may be filed to revive an abandoned application or a lapsed patent pursuant to 37 CFR 1.137(b). A grantable petition filed under the provisions of 37 CFR 1.137(b) must be accompanied by:

(1) the required reply, unless previously filed. In a nonprovisional application abandoned for failure to prosecute, the required reply may be met by the filing of a continuing application. In an application or patent, abandoned or lapsed for failure to pay the issue fee or any portion thereof, the required reply must be the payment of the issue fee or any outstanding balance thereof.

(2) the petition fee as set forth in 37 CFR 1.17(m);

(3) a statement that the entire delay in filing the required reply from the due date for the reply until the filing of a grantable petition pursuant to 37 CFR 1.137(b) was unintentional. The Commissioner may required additional information where there is a question whether the delay was unintentional; and

(4) any terminal disclaimer (and fee as set forth in 37 CFR 1.20(d)) required pursuant to 37 CFR 1.137(c)).

Effective October 1, 2004 the petition fee was set at $1500 for a large entity and $750 for a small entity. As well, the issue fee was set at $1400 for a large entity and $700 for a small entity. The publication is set at $300. It appears that petitioner was attempting to pay the fees at the small entity rate but only $1500 was authorized to be charged to the credit card given. $300 for the publication has been satisfied and $750 has been applied to the petition fee but the balance of $450 is not sufficient to satisfy the issue fee.

In view thereof, the balance of the issue fee ($250) is due before a petition on the merits can be addressed and granted. The application will therefore remain in an abandoned status until such time as the issue fee has been paid.

Further correspondence with respect to this matter should be addressed as follows:

By mail: Mail Stop Petitions
Commissioner for Patents
P.O. Box 1450
Alexandria VA 22313-1450

By FAX: (571) 273-8300

Telephone inquiries concerning this matter may be directed to the undersigned Petitions Attorney at (571) 272-3212.

Patricia Faison-Ball

Patricia Faison-Ball
Senior Petitions Attorney
Office of Petitions

UNITED STATES PATENT AND TRADEMARK OFFICE

Commissioner for Patents
United States Patent and Trademark Office
P.O. Box 1450
Alexandria, VA 22313-1450
www.uspto.gov

COPY MAILED

MAR 27 2006

OFFICE OF PETITIONS

MICROPYRETICS HEATERS INTERNATIONAL, INC.
750 REDNA TERRACE
CINCINNATI OH 45215

In re Application of
Jainagesh Sekhar
Application No. 10/369,700
Filed: February 21, 2003
Title of Invention: **TREATMENT FOR IMPROVING THE STABILITY OF SILICON CARBIDE HEATING ELEMENTS**

ON PETITION

This is a decision on the renewed petition under 37 CFR 1.137(b)[1], filed March 13, 2006, to revive the above identified application.

The petition is **GRANTED**.

This application became abandoned October 11, 2005 for failure to timely pay the issue fee in response to the Notice of Allowance mailed July 9, 2005. A petition filed February 9, 2006, under 37 CFR 1.137(b), was dismissed in a decision mailed February 21, 2006 because the authorization for charging the fees was not properly submitted and thus the fees were deficient.

Comes now petitioner with the instant renewed petition and a proper credit card authorization for the balance of the issue fee due.

All other requirements under 37 CFR 1.137(b) having been met, this matter is being referred to the Publishing Division to be processed into a patent.

Telephone inquiries concerning this matter may be directed to the undersigned Petitions Attorney at (571) 272-3212.

Patricia Faison-Ball
Senior Petitions Attorney
Office of Petitions

---

[1]Effective December 1, 1997, the provisions of 37 CFR 1.137(b) now provide that where the delay in reply was unintentional, a petition may be filed to revive an abandoned application or a lapsed patent pursuant to 37 CFR 1.137(b). A grantable petition filed under the provisions of 37 CFR 1.137(b) must be accompanied by:

(1) the required reply, unless previously filed. In a nonprovisional application abandoned for failure to prosecute, the required reply may be met by the filing of a continuing application. In an application or patent, abandoned or lapsed for failure to pay the issue fee or any portion thereof, the required reply must be the payment of the issue fee or any outstanding balance thereof.

(2) the petition fee as set forth in 37 CFR 1.17(m);

(3) a statement that the entire delay in filing the required reply from the due date for the reply until the filing of a grantable petition pursuant to 37 CFR 1.137(b) was unintentional. The Commissioner may required additional information where there is a question whether the delay was unintentional; and

(4) any terminal disclaimer (and fee as set forth in 37 CFR 1.20(d)) required pursuant to 37 CFR 1.137(c)).

UNITED STATES PATENT AND TRADEMARK OFFICE

Commissioner for Patents
United States Patent and Trademark Office
P.O. Box 1450
Alexandria, VA 22313-1450
www.uspto.gov

KENYON & KENYON
1500 K STREET NW
SUITE 700
WASHINGTON DC 20005

COPY MAILED

NOV 0 3 2005

OFFICE OF PETITIONS

In re Application of :
Bradford B. Congdon et al. :
Application No. 10/369,727 : ON PETITION
Filed: February 21, 2003 :
Attorney Docket No.: 219/36740CX1

This is a decision on the petition filed September 1, 2005 under 37 CFR 1.137(b),[1] to revive the above-identified application.

The petition is **GRANTED**.

This application became abandoned for failure to timely reply to the non-Final Office Action mailed October 15, 2004. A shortened statutory period of three months was set for replying to the non-Final Office Action. No extensions of time having been requested, this application became abandoned January 16, 2005. The instant petition and this decision precede the mailing of the Notice of Abandonment.

This matter is being referred to Technology Center 2676 for appropriate action on the amendment filed September 1, 2005.

Telephone inquiries concerning this matter should be directed to the undersigned Petitions Attorney at (571) 272-3212.

Patricia Faison-Ball
Senior Petitions Attorney
Office of Petitions

---

[1]Effective December 1, 1997, the provisions of 37 CFR 1.137(b) now provide that where the delay in reply was unintentional, a petition may be filed to revive an abandoned application or a lapsed patent pursuant to 37 CFR 1.137(b). A grantable petition filed under the provisions of 37 CFR 1.137(b) must be accompanied by:

(1) the required reply, unless previously filed. In a nonprovisional application abandoned for failure to prosecute, the required reply may be met by the filing of a continuing application. In a nonprovisional application filed on or after June 8, 1995, and abandoned for failure to prosecute, the required reply may also be met by the filing of a request for continued examination in compliance with § 1.114. In an application or patent, abandoned or lapsed for failure to pay the issue fee or any portion thereof, the required reply must be the payment of the issue fee or any outstanding balance thereof. In an application abandoned for failure to pay the publication fee, the required reply must include payment of the publication fee.

(2) the petition fee as set forth in 37 CFR 1.17(m);

(3) a statement that the entire delay in filing the required reply from the due date for the reply until the filing of a grantable petition pursuant to 37 CFR 1.137(b) was unintentional. The Commissioner may required additional information where there is a question whether the delay was unintentional; and

(4) any terminal disclaimer (and fee as set forth in 37 CFR 1.20(d)) required pursuant to 37 CFR 1.137(c)).

UNITED STATES PATENT AND TRADEMARK OFFICE

COMMISSIONER FOR PATENTS
UNITED STATES PATENT AND TRADEMARK OFFICE
P.O. BOX 1450
ALEXANDRIA, VA 22313-1450
WWW.USPTO.GOV

Paper No. 3

BACON & THOMAS
625 SLATERS LANE
4TH FLOOR
ALEXANDRIA, VA 22314

COPY MAILED

JUN 1 2 2003

OFFICE OF PETITIONS

In re Application of	:	
Chan-Tung Chen	:	
Application No. 10/369,735	:	NOTICE
Filed: February 21, 2003	:	
Attorney Docket No. CHEN3485/EM	:	

This is a notice regarding your request for acceptance of a fee deficiency submission under 37 CFR 1.28. On September 1, 1998, the Court of Appeals for the Federal Circuit held that 37 CFR 1.28(c) is the sole provision governing the time for correction of the erroneous payment of the issue fee as a small entity. **See DH Technology v. Synergystex International, Inc. 154 F.3d 1333, 47 USPQ2d 1865 (Fed. Cir. Sept. 1, 1998).**

The Office no longer investigates or rejects original or reissue applications under 37 CFR 1.56. **1098 Off. Gaz. Pat. Office 502 (January 3, 1989)**. Therefore, nothing in this Notice is intended to imply that an investigation was done.

Your fee deficiency submission under 37 CFR 1.28 is hereby **ACCEPTED**.

Inquiries related to this communication should be directed to the Office of Petitions Staff at (703) 305-9285.

This file is being forwarded to Technology Center AU 3711.

Wan Laymon
Petitions Examiner
Office of Petitions
Office of the Deputy Commissioner
for Patent Examination Policy

UNITED STATES PATENT AND TRADEMARK OFFICE

Commissioner for Patents
United States Patent and Trademark Office
P.O. Box 1450
Alexandria, VA 22313-1450
www.uspto.gov

COPY MAILED

DEC 1 8 2009

OFFICE OF PETITIONS

WYETH LLC/FINNEGAN HENDERSON, LLP
901 NEW YORK AVENUE, NW
WASHINGTON DC 20001-4413

In re Patent No. 7,572,763	
Hill et al.	
Issue Date: August 11, 2009	
Application No. 10/369,738	DECISION ON REQUEST FOR
Filed: February 21, 2003	RECONSIDERATION OF
Attorney Dkt. No. 08702.0014-00000	PATENT TERM ADJUSTMENT
Title: FOLLISTATIN DOMAIN CONTAINING PROTEINS	

This is a decision on the "REQUEST FOR RECONSIDERATION OF PATENT TERM ADJUSTMENT PURSUANT TO 37 CFR 1.705(D)," filed October 7, 2009, requesting that the patent term adjustment determination for the above-identified patent be changed from three hundred ninety-two (392) days to nine hundred eighty-seven (987) days.

The request for reconsideration of patent term adjustment is **DISMISSED**.

On August 11, 2009, the above-identified application matured into US Patent No. 7,572,763 with a patent term adjustment of 392 days. This request for reconsideration of patent term adjustment was timely filed within two months of the issue date of the patent. See 37 C.F.R. § 1.705(d).

The Office acknowledges submission of the $200.00 fee set forth in 37 C.F.R. § 1.18(e). No additional fees are required.

Patentees request recalculation of the patent term adjustment based on the decision in Wyeth v. Dudas, 580 F. Supp. 2d 138, 88 U.S.P.Q. 2d 1538 (D.D.C. 2008). Patentees assert entitlement to an additional patent term adjustment of 595 days due to the Three Year Delay by the Office, pursuant to 37 CFR § 1.703(b) Thus, patentees request that the determination of patent term

adjustment be increased to a total of nine hundred eighty-seven (987) days (the sum of the period of three-year delay (595 days) and the period of examination delay (609 days) minus applicants' delay (217 days). Patentees do not dispute the 217-day reduction for applicants' delay.

The Office finds that as of October 8, 2007, the day before the filing of the request for continued examination (RCE) on October 9, 2007, the application was pending three years and 594 days after its filing date. At the time of filing of the RCE on October 9, 2007, a period of adjustment of 609 days was entered for Office delay pursuant to 37 CFR 1.702(a)(1). At issue is whether patentee should accrue an additional 594 days of patent term adjustment for the Office taking in excess of three years to issue the patent as well as 609 days for Office failure to take a certain action within a specified time frame (or examination delay).

The Office contends that the entire 594-day period of delay in issuance of the patent overlaps with the period of 609 days of examination delay. Patentees' calculation of the period of overlap is inconsistent with the Office's interpretation of this provision. 35 U.S.C. 154(b)(2)(A) limits the adjustment of patent term, as follows:

> To the extent that the periods of delay attributable to grounds specified in paragraph (1) overlap, the period of any adjustment granted under this subsection shall not exceed the actual number of days the issuance of the patent was delayed.

Likewise, 37 CFR 1.703(f) provides that:

> To the extent that periods of delay attributable to the grounds specified in §1.702 overlap, the period of adjustment granted under this section shall not exceed the actual number of days the issuance of the patent was delayed.

As explained in *Explanation of 37 CFR 1.703(f) and of the United States Patent and Trademark Office Interpretation of 35 U.S.C. 154(b)(2)(A)*, 69 Fed. Reg. 34283 (June 21, 2004), the Office interprets 35 U.S.C. 154(b)(2)(A) as permitting either patent term adjustment under 35 U.S.C. 154(b)(1)(A)(i)-(iv), or patent term adjustment under 35 U.S.C. 154(b)(1)(B), but not as

permitting patent term adjustment under both 35 U.S.C. 154(b)(1)(A)(i)-(iv) and 154(b)(1)(B). Accordingly, the Office implements the overlap provision as follows:

> If an application is entitled to an adjustment under 35 U.S.C. 154(b)(1)(B), the entire period during which the application was pending (except for periods excluded under 35 U.S.C. 154(b)(1)(B)(i)-(iii)), and not just the period beginning three years after the actual filing date of the application, is the period of delay under 35 U.S.C. 154(b)(1)(B) in determining whether periods of delay overlap under 35 U.S.C. 154(b)(2)(A). Thus, any days of delay for Office issuance of the patent more than 3 years after the filing date of the application, which overlap with the days of patent term adjustment accorded prior to the issuance of the patent will not result in any additional patent term adjustment. See 35 U.S.C. 154(b)(1)(B), 35 U.S.C. 154(b)(2)(A), and 37 CFR § 1.703(f). See *Changes to Implement Patent Term Adjustment Under Twenty Year Term; Final Rule*, 65 Fed. Reg. 56366 (Sept. 18, 2000). See also *Revision of Patent Term Extension and Patent Term Adjustment Provisions; Final Rule*, 69 Fed. Reg. 21704 (April 22, 2004), 1282 Off. Gaz. Pat. Office 100 (May 18, 2004). See also *Explanation of 37 CFR 1.703(f) and of the United States Patent and Trademark Office Interpretation of 35 U.S.C. 154(b)(2)(A)*, 69 Fed. Reg. 34283 (June 21, 2004).

As such, the period for over 3 year pendency does not overlap only to the extent that the actual dates in the period beginning three years after the date on which the application was filed overlap with the actual dates in the periods for failure of the Office to take action within specified time frames.

In this instance, the relevant period under 35 U.S.C. 154(b)(1)(B) in determining whether periods of delay "overlap" under 35 U.S.C. 154(b)(2)(A) is the entire period during which the application was pending before the Office, February 21, 2003 until October 8, 2007, the day before the filing of the RCE on October 9, 2007. 609 days of patent term adjustment were accorded prior to the filing of the RCE for the Office failing to respond within specified time frames during the pendency of the application. All of the 594 days for Office delay in issuing the patent overlap with the 609 days of Office delay accrued prior to submission of the RCE. Entry of both 594 days pursuant

to 37 CFR §1.702(b) for the Office taking in excess of three years to issue the patent and 609 days pursuant to 37 CFR §1.702(a)(1) for Office examination delay is neither permitted nor warranted. The Office did not delay 609 days and then delay another 594 days. As of the filing of the RCE on October 9, 2007, the greater period, 609 days, is the actual number of days issuance of the patent was delayed by the Office.

Accordingly, at issuance, the Office properly entered no additional days of patent term adjustment for the Office taking in excess of 3 years to issue the patent, having considered the 609 days of examination delay under 37 CFR 1.702(a)(1).

In view thereof, no adjustment to the patent term will be made.

Telephone inquiries specific to this matter should be directed to Charlema Grant, Petitions Attorney, at (571) 272-3215.

/ALESIA M. BROWN/

Alesia M. Brown
Petitions Attorney
Office of Petitions

UNITED STATES PATENT AND TRADEMARK OFFICE

UNITED STATES DEPARTMENT OF COMMERCE
United States Patent and Trademark Office
Address: COMMISSIONER FOR PATENTS
P.O. Box 1450
Alexandria, Virginia 22313-1450
www.uspto.gov

WYETH LLC/FINNEGAN HENDERSON, LLP
901 NEW YORK AVENUE, NW
WASHINGTON, DC 20001-4413

Mail Date: 04/21/2010

Applicant	: Jennifer J. Hill	: DECISION ON REQUEST FOR
Patent Number	: 7572763	: RECALCULATION of PATENT
Issue Date	: 08/11/2009	: TERM ADJUSTMENT IN VIEW
Appliction No	: 10/369,738	: OF WYETH AND NOTICE OF INTENT TO
Filed	: 02/21/2003	: ISSUE CERTIFICATE OF CORRECTION
		:

The Request for Recalculation is **GRANTED** to the extent indicated.

The patent term adjustment has been determined to be **986** days. The USPTO will *sua sponte* issue a certificate of correction reflecting the amount of PTA days determined by the recalculation.

Prior to the issuance of the certificate of correction, the USPTO will afford patentee an opportunity to be heard and request reconsideration. Accordingly, patentee has **one month or thirty (30) days**, whichever is longer, to file a request for reconsideration of this patent term adjustment calculation. See 35 U.S.C. 154(b)(3)(B)(ii) and 37 CFR 1.322(a)(4). No extensions of time will be granted under 37 CFR 1.136.

Patentee should use document code PET.OP if electronically filing a request for reconsideration of this patent term adjustment calculation. The patentee must also include the information required by 37 CFR 1.705(b)(2) and the fee required by 37 CFR 1.18(e). If patentee does not file a timely request for reconsideration of this patent term adjustment calculation including the information required by 37 CFR 1.705(b)(2) and the fee required by 37 CFR 1.18(e), the USPTO will issue a certificate of correction reflecting the PTA determination noted above.

Patentee should be aware that in order to preserve the right to review in the United States District Court for the District of Columbia of the USPTO patent term adjustment determination, patentee must ensure that he or she also take the steps required under 35 U.S.C. 154(b)(4)(A) in a timely manner. Nothing in the request for recalculation should be construed as providing an alternative time frame for commencing a civil action under 35 U.S.C. 154(b)(4)(A).

Any questions concerning this decision should be directed to the Office of Patent Legal Administration at 571-272-7702.

UNITED STATES PATENT AND TRADEMARK OFFICE

Commissioner for Patents
United States Patent and Trademark Office
P.O. Box 1450
Alexandria, VA 22313-1450
www.uspto.gov

2/20/08

Patent No. :7163933
Ser. No. :10369752
Inventor(s) :Seiichi ISHIZUKA
Issued : 1/16/07
Title : Treating Agent For Pagets Disease Of Bone
Docket No. :

Re: Request for Certificate of Correction

Consideration has been given your request for the issuance of a certificate of correction for the above-identified patent under the provisions of Rule(s) 1.322 and/or 1.323.

Assignees' names and addresses (assignment data) printed in a patent, are based *solely* on information supplied in the appropriate space for identifying the assignment data, i.e., item 3 of the Issue Fee Transmittal Form PTOL-85B. Granting of a request under 37 CFR 3.81(b) is required to correct applicant's error providing ***incorrect or erroneous*** assignment data, *before* issuance of a Certificate of Correction, under 37 CFR 1.323 *(see Manual of Patent Examining Procedures (M.P.E.P) Chp.1400, sect. 1481).* This procedure is required *at any time after the issue fee is paid*, including after issuance of the patent.

In view of the foregoing, your request, in this mater, is hereby denied.

A request to correct the Assignee under 37 CFR 3.81(b) should include:

A. **the processing fee set forth in 37 CFR 1.117(h) (currently $130);**
B. a statement that the failure to include the correct assignee name on the PTOL-85B was inadvertent; and
C. a copy of the Notice of Recordation of Assignment Document, reflecting the reel and frame number where the assignment(s) is recorded and/or reflecting proof of *the date* the assignment was submitted for recordation.

In the Request, Applicant(s) may request that the file be forwarded to Certificates of Correction Branch, for issuance of a Certificate of Correction, if the Request is granted.

Any request under 37 CFR 3.81(b) should be directed to the following address or facsimile number:

By mail: Mail Stop PETITIONS
Commissioner for Patents
Post Office Box 1450
Alexandria, VA 22313-1450

By hand: Customer Service Window
Mail Stop Petitions
Randolph Building
401 Dulany Street
Alexandria, VA 22314

By fax: (703) 872-9306
ATTN: Office of Petitions

If a fee (currently $100) was previously submitted for consideration of a Request for Certificate of Correction, under CFR 1.323, to correct assignment data, , no additional fee is required.

A certificate of correction will be issued to correct the remaining errors noted in your request.

Henry Randall
For Cecelia Newman
Decisions & Certificates
of Correction Branch
(703) 308-9390 Ext. 108

SUGHRUE MION, PLLC
2100 PENNSYLVANIA, N.W.
SUITE 800
WASHINGTON, DC 20037

HR

UNITED STATES PATENT AND TRADEMARK OFFICE

Commissioner for Patents
United States Patent and Trademark Office
P.O. Box 1450
Alexandria, VA 22313-1450
www.uspto.gov

SUGHRUE MION, PLLC
2100 PENNSYLVANIA AVENUE, N.W.
SUITE 800
WASHINGTON DC 20037

COPY MAILED

OCT 30 2008

OFFICE OF PETITIONS

In re Patent No. 7,163,933	:	
Issue Date: January 16, 2007	:	
Application No. 10/369,752	:	ON PETITION
Filed: February 21 2003	:	
Attorney Docket No. Q74362	:	

This is a decision on the petition filed November 21, 2007, which is being treated as a request under 37 CFR 3.81(b)[1] to correct the name of an assignee on the front page of the above-identified patent by way of a Certificate of Correction.

The letter Re: Request for Certificate of Correction mailed from the Certificates of Correction Branch on February 20, 2008 is **Vacated**.

The request is **GRANTED**.

Telephone inquiries concerning this decision may be directed to Carl Friedman at (571) 272-6842. Inquiries regarding the issuance of a certificate of correction should be directed to the Certificate of Correction Branch at (571) 272-4200.

The Certificates of Correction Branch will be notified of this decision granting the petition under 37 CFR 3.81(b) and directing issuance of the requested Certificate of Correction.

Carl Friedman
Petitions Examiner
Office of Petitions

---

[1] *See* MPEP 1309, subsection II; and Official Gazette of June 22, 2004.

RECEIVED
CENTRAL FAX CENTER
MAR 1 5 2005

Docket No. 234352US99CONT

IN THE UNITED STATES PATENT AND TRADEMARK OFFICE

IN RE APPLICATION OF: :

John SCOFIELD, et al : GROUP: 1762

SERIAL NUMBER: 10/369,769 : EXAMINER: CLEVELAND, M.

FILED: February 21, 2003 :

FOR: OMNISHIELD PROCESS AND PRODUCT

Approved
JMStone
Jacqueline M. Stone, Director
Technology Center 1700

PETITION FOR ATTORNEY WITHDRAWAL UNDER 37 CFR 1.36

Commissioner for Patents
PO Box 1450
Alexandria, Virginia 22313-1450

Sir:

The Attorneys of Record in the present Application hereby respectfully petition to withdraw from any further representation of the Applicant of the subject application under the provisions of, and in compliance with the criteria set forth, in 37 CFR 10.40(c)(1)(vi). The applicant is being advised of this action concurrently herewith and provided with a copy of the petition.

It is requested that all further communications be forwarded to the Assignee at the following address:

OMNISHIELD, INC.
P.O. Box 156
Elmhurst, PA 18416

UNITED STATES PATENT AND TRADEMARK OFFICE

Commissioner for Patents
United States Patent and Trademark Office
P.O. Box 1450
Alexandria, VA 22313-1450
www.uspto.gov

STEPTOE & JOHNSON LLP
1330 CONNECTICUT AVENUE, N.W.
WASHINGTON, DC 20036

COPY MAILED

FEB 0 2 2009

OFFICE OF PETITIONS

In re Application of	:	
Thomas **LAAKSO, et al.**	:	
Application No. 10/369,770	:	DECISION GRANTING PETITION
Filed: February 21, 2003	:	UNDER 37 CFR 1.313(c)(2)
Attorney Docket No. **11049-009**	:	

This is a decision on the petition under 37 CFR 1.313(c)(2), filed January 28, 2009, to withdraw the above-identified application from issue after payment of the issue fee.

The petition is **GRANTED**.

The above-identified application is withdrawn from issue for consideration of a submission under 37 CFR 1.114 (request for continued examination). *See* 37 CFR 1.313(c)(2).

Petitioner is advised that the issue fee paid on December 23, 2008 cannot be refunded. If, however, this application is again allowed, petitioner may request that it be applied towards the issue fee required by the new Notice of Allowance.[1]

Telephone inquiries should be directed to the undersigned at (571) 272-7253.

This application is being referred to Technology Center AU 3632 for processing of the request for continued examination under 37 CFR 1.114 and for consideration of the concurrently filed information disclosure statement.

/Monica A. Graves/
Petitions Examiner, Office of Petitions

---

[1] *The request to apply the issue fee to the new Notice may be satisfied by completing and returning the new Part B – Fee(s) Transmittal Form (along with any balance due at the time of submission). Petitioner is advised that the Issue Fee Transmittal Form* ***must*** *be completed and timely submitted to avoid abandonment of the application.*

UNITED STATES PATENT AND TRADEMARK OFFICE

Commissioner for Patents
United States Patent and Trademark Office
P.O. Box 1450
Alexandria, VA 22313-1450
www.uspto.gov

STEPTOE & JOHNSON LLP
1330 CONNECTICUT AVENUE, N.W.
WASHINGTON, DC 20036

MAILED

JUN 0 4 2010

OFFICE OF PETITIONS

In re Application of	:	
Thomas **LAAKSO, et al.**	:	
Application No. 10/369,770	:	DECISION GRANTING PETITION
Filed: February 21, 2003	:	UNDER 37 CFR 1.313(c)(2)
Attorney Docket No. **11049-009**	:	

This is a decision on the petition under 37 CFR 1.313(c)(2), filed June 3, 2010, to withdraw the above-identified application from issue after payment of the issue fee.

The petition is **GRANTED**.

The above-identified application is withdrawn from issue for consideration of a submission under 37 CFR 1.114 (request for continued examination). *See* 37 CFR 1.313(c)(2).

Petitioner is advised that the issue fee paid on April 26, 2010 cannot be refunded. If, however, this application is again allowed, petitioner may request that it be applied towards the issue fee required by the new Notice of Allowance.[1]

Telephone inquiries should be directed to the undersigned at (571) 272-7253.

This application is being referred to Technology Center AU 3632 for processing of the request for continued examination under 37 CFR 1.114 and for consideration of the concurrently filed information disclosure statement.

/Monica A. Graves/
Petitions Examiner, Office of Petitions

---

[1] *The request to apply the issue fee to the new Notice may be satisfied by completing and returning the new Part B – Fee(s) Transmittal Form (along with any balance due at the time of submission). Petitioner is advised that the Issue Fee Transmittal Form* ***must*** *be completed and timely submitted to avoid abandonment of the application.*

UNITED STATES PATENT AND TRADEMARK OFFICE

UNITED STATES DEPARTMENT OF COMMERCE
United States Patent and Trademark Office
Address: COMMISSIONER FOR PATENTS
P.O. Box 1450
Alexandria, Virginia 22313-1450
www.uspto.gov

APPL NO.	FILING OR 371 (c) DATE	ART UNIT	FIL FEE REC'D	ATTY.DOCKET NO	DRAWINGS	TOT CLMS	IND CLMS
10/369,815	02/18/2003	2661	996	CISCP327/6474	8	29	4

CONFIRMATION NO. 6554

CORRECTED FILING RECEIPT

OC000000011158442

022434
BEYER WEAVER & THOMAS LLP
P.O. BOX 778
BERKELEY, CA 94704-0778

Date Mailed: 11/03/2003

Receipt is acknowledged of this regular Patent Application. It will be considered in its order and you will be notified as to the results of the examination. Be sure to provide the U.S. APPLICATION NUMBER, FILING DATE, NAME OF APPLICANT, and TITLE OF INVENTION when inquiring about this application. Fees transmitted by check or draft are subject to collection. Please verify the accuracy of the data presented on this receipt. **If an error is noted on this Filing Receipt, please write to the Office of Initial Patent Examination's Filing Receipt Corrections, facsimile number 703-746-9195. Please provide a copy of this Filing Receipt with the changes noted thereon. If you received a "Notice to File Missing Parts" for this application, please submit any corrections to this Filing Receipt with your reply to the Notice. When the USPTO processes the reply to the Notice, the USPTO will generate another Filing Receipt incorporating the requested corrections (if appropriate).**

Applicant(s)

Xiaomei Liu, San Jose, CA;

Assignment For Published Patent Application

Cisco Technology, Inc., San Jose, CA;

Domestic Priority data as claimed by applicant

Foreign Applications

If Required, Foreign Filing License Granted: 04/30/2003

Projected Publication Date: Request for Non-Publication Acknowledged

Non-Publication Request: Yes

Early Publication Request: No

Title

Methods and apparatus for transmitting video streams on a packet network

Preliminary Class

LICENSE FOR FOREIGN FILING UNDER
Title 35, United States Code, Section 184
Title 37, Code of Federal Regulations, 5.11 & 5.15

GRANTED

The applicant has been granted a license under 35 U.S.C. 184, if the phrase "IF REQUIRED, FOREIGN FILING LICENSE GRANTED" followed by a date appears on this form. Such licenses are issued in all applications where the conditions for issuance of a license have been met, regardless of whether or not a license may be required as set forth in 37 CFR 5.15. The scope and limitations of this license are set forth in 37 CFR 5.15(a) unless an earlier license has been issued under 37 CFR 5.15(b). The license is subject to revocation upon written notification. The date indicated is the effective date of the license, unless an earlier license of similar scope has been granted under 37 CFR 5.13 or 5.14.

This license is to be retained by the licensee and may be used at any time on or after the effective date thereof unless it is revoked. This license is automatically transferred to any related applications(s) filed under 37 CFR 1.53(d). This license is not retroactive.

The grant of a license does not in any way lessen the responsibility of a licensee for the security of the subject matter as imposed by any Government contract or the provisions of existing laws relating to espionage and the national security or the export of technical data. Licensees should apprise themselves of current regulations especially with respect to certain countries, of other agencies, particularly the Office of Defense Trade Controls, Department of State (with respect to Arms, Munitions and Implements of War (22 CFR 121-128)); the Office of Export Administration, Department of Commerce (15 CFR 370.10 (j)); the Office of Foreign Assets Control, Department of Treasury (31 CFR Parts 500+) and the Department of Energy.

NOT GRANTED

No license under 35 U.S.C. 184 has been granted at this time, if the phrase "IF REQUIRED, FOREIGN FILING LICENSE GRANTED" DOES NOT appear on this form. Applicant may still petition for a license under 37 CFR 5.12, if a license is desired before the expiration of 6 months from the filing date of the application. If 6 months has lapsed from the filing date of this application and the licensee has not received any indication of a secrecy order under 35 U.S.C. 181, the licensee may foreign file the application pursuant to 37 CFR 5.15(b).

UNITED STATES PATENT AND TRADEMARK OFFICE

COMMISSIONER FOR PATENTS
UNITED STATES PATENT AND TRADEMARK OFFICE
P.O. BOX 1450
ALEXANDRIA, VA 22313-1450
www.uspto.gov

Paper No. 4

AKERMAN SENTERFITT & EIDSON, P.A.
Akerman Senterfitt
P.O. Box 3188
West Palm Beach, FL 33402-3188

COPY MAILED

AUG 06 2003

OFFICE OF PETITIONS

In re Application of :
Hu :
Application No. 10/369,818 : DECISION ON PETITION
Filed: February 19, 2003 :
Attorney Docket No. 6321-220DIV2 :

This is a decision on the petition filed June 9, 2003, requesting, in effect, that the "Notice Of Omitted Item(s)" mailed May 7, 2003, be withdrawn to the extent that it states page 2 of the specification is missing.

The petition is **dismissed**.

The application was filed on February 19, 2003. On May 7, 2003, the Office of Initial Patent Examination mailed a "Notice of Omitted Item(s)" stating that the application had been accorded a filing date of February 19, 2003, and advising applicants that page 2 of the specification appeared to have been omitted.

In response, the present petition was filed. Petitioners explain that page 2 was not missing but was instead merely not unlabeled. The page submitted with the petition as "page 2" is identical to a page received with the original application papers except for the legend on the new page. The page submitted with the petition will not be entered at this time. If petitioner wishes to amend the original page, such as by adding a legend or page number, a formal amendment must be filed.

The Notice mailed by the Office was correct in so far as a page 2 of the specification *appeared* to have been omitted. Specifically, a page labeled "page 2" was not present in the file. Therefore, the petition to withdraw the notice is dismissed.

In the future, petitioner should make certain when reviewing the application prior to filing that all pages are correctly labeled. If a Notice of Omitted Items is mailed because a page or drawing is unlabeled or mislabeled, petitioner may amend the specification to properly label the drawings and a petition is NOT necessary.

Petitioner should note that page 1 of the specification appears to be missing or omitted. The Office of Initial Patent Examination interpreted "page 2" as being page 1 of the specification.

Unless a request for reconsideration and proof that page 1 was filed on February 19, 2003, is filed within 2 months of the mailing date of this decision, petitioner will be presumed to have constructively accepted the application as shown in Office records.[1]

---

[1] Should applicant desire to supply the page and accept the date the figure is filed in the Office as the filing date, the figure, a petition under 37 CFR 1.182 requesting that the filing date be corrected to correspond to the date the figure is filed in the Office and the $130.00 petition fee must be filed within **TWO MONTHS** of the date of this notice.

Any request for reconsideration must be submitted within TWO (2) MONTHS from the mail date of this decision. No further petition fee is required for the request. The reconsideration request should include a cover letter entitled "Renewed Petition under 37 CFR 1.53."

Further correspondence with respect to this matter should be addressed as follows:

By mail: Mail Stop Petition
Commissioner for Patents
P.O. Box 1450
Alexandria, VA 22313-1450

By facsimile: (703) 308-6916
Attn: Office of Petitions

By hand: Office of Petitions
2201 South Clark Place
Crystal Plaza 4, Suite 3C23
Arlington, VA 22202

Telephone inquiries should be directed to Petitions Attorney Steven Brantley at (703) 306-5683.

Charles Steven Brantley
Petitions Attorney
Office of Petitions

SPE RESPONSE FOR CERTIFICATE OF CORRECTION

Paper No.: _____

DATE : 11/9/04

TO SPE OF : ART UNIT 2800

SUBJECT : Request for Certificate of Correction on Patent No.: 6728152

A response is requested with respect to the accompanying request for a certificate of correction.

Please complete this form and return with file, within 7 days to:
Certificates of Correction Branch - PK 3-915
Palm location **7580** - Tel. No. 305-8309

With respect to the change(s) requested, correcting Office and/or Applicant's errors, should the patent read as shown in the certificate of correction? No new matter should be introduced, nor should the scope or meaning of the claims be changed.

Virginia Tolbert
Certificates of Correction Branch

Thank You For Your Assistance

The request for issuing the above-identified correction(s) is hereby:
Note your decision on the appropriate box.

- ☐ **Approved** — All changes apply.
- ☑ **Approved in Part** — Specify below which changes **do not** apply.
- ☐ **Denied** — State the reasons for denial below.

Comments:

The changes in column 12, line 8, in column 12, line 11 and in column 12, line 13 shoud not be made. The other changes should be made.

SPE

2818
Art Unit

PTOL-306 (REV. 7/03)

U.S. DEPARTMENT OF COMMERCE Patent and Trademark Office

SPE RESPONSE FOR CERTIFICATE OF CORRECTION

Paper No.: _____

DATE : March 4, 2009

TO SPE OF : ART UNIT 2618

SUBJECT : Request for Certificate of Correction for Appl. No.: 10/369836 /7428425

Please respond to this request for a certificate of correction within 7 days.

FOR IFW FILES:

Reference

Please review the requested changes/corrections as shown in the **COCIN** document(s) in the IFW application image. No new matter should be introduced, nor should the scope or meaning of the claims be changed.

Please complete the response (see below) and forward the completed response to scanning using document code **COCX**.

FOR PAPER FILES:

Please review the requested changes/corrections as shown in the attached certificate of correction. Please complete this form (see below) and forward it with the file to:

Certificates of Correction Branch (CofC)
South Tower - 9A22
Palm Location 7580

Magdalene Talley
Certificates of Correction Branch
703-308-9390 ext. 120

Thank You For Your Assistance

The request for issuing the above-identified correction(s) is hereby:

Note your decision on the appropriate box.

- ☒ **Approved** — All changes apply.
- ☐ **Approved in Part** — Specify below which changes **do not** apply.
- ☐ **Denied** — State the reasons for denial below.

Comments: Approved. Thank you

/duc nguyen/
SPE

2618
Art Unit

UNITED STATES PATENT AND TRADEMARK OFFICE

COMMISSIONER FOR PATENTS
UNITED STATES PATENT AND TRADEMARK OFFICE
P.O. BOX 1450
ALEXANDRIA, VA 22313-1450
www.uspto.gov

Paper No.

NOVARTIS
CORPORATE INTELLECTUAL PROPERTY
ONE HEALTH PLAZA 104/3
EAST HANOVER, NJ 07936-1080

COPY MAILED

JUL 12 2005

OFFICE OF PETITIONS

In re Patent No. 6,806,375	:	
Freer et al.	:	DECISION ON REQUEST FOR
Issue Date: October 19, 2004	:	RECONSIDERATION OF
Application No. 10/369,841	:	PATENT TERM ADJUSTMENT
Filed: February 19, 2003	:	and
Attorney Docket No. 4-31839B	:	NOTICE OF INTENT TO ISSUE
	:	CERTIFICATE OF CORRECTION

This is a decision on the "REQUEST FOR RECONSIDERATION OF "FINAL" PATENT TERM ADJUSTMENT UNDER 37 CFR 1.705(d)," filed November 17, 2004. Patentees request that the patent term adjustment of zero (0) days recited on the face of the patent be corrected to forty-six (46) days.

The request for reconsideration of the patent term adjustment indicated in the patent is ***GRANTED***.

The patent term adjustment indicated in the patent is to be corrected by issuance of a certificate of correction showing a revised Patent Term Adjustment of forty-six (46) days.

On October 19, 2004, the above-identified application matured into U.S. Patent No. 6,806,375, with a revised patent term adjustment of 0 days. On November 17, 2004, patentees timely submitted this request for reconsideration of patent term adjustment (with required fee) within 2 months of the issuance of the patent. Patentees contend that a period of adjustment of 67 days should have been entered for Office failure to issue the

patent within four months after the date the issue fee was paid and all outstanding requirements were satisfied. See § 1.703(a)(6). Patentees assert that the Office delay was incorrectly calculated as zero (0) days, using the date of re-mailing of the notice of allowance and applicants' response thereto.

Patentees' arguments are well taken. A review of the record reveals that the issue fee payment had been made and all outstanding requirements had been met as of April 13, 2004. There were no further outstanding requirements to be met by applicants. However, a new "notice of allowability" had to be mailed to correct the examiner's error in identifying the allowed claims. A "corrected" notice of allowance accompanied this notice and in response, applicants properly resubmitted the issue fee transmittal (with no fees due). Under the circumstances, the original submission of the issue fee transmittal (and issue fee payment), not the resubmission, should be using in calculating Office delay within the meaning of § 1.703(a)(6). This delay is, as stated by patentees, 67 days.

In view thereof, the patent should have issued with a revised patent term adjustment of FORTY-SIX (46) days (67 - 21).

The application file is being forwarded to the Certificates of Correction Branch for issuance of a certificate of correction in order to rectify this error. The Office will issue a certificate of correction indicating that the term of the above-identified patent is extended or adjusted by FORTY-SIX (46) days.

Telephone inquiries specific to this matter should be directed to Nancy Johnson, Senior Petitions Attorney, at (571) 272-3219.

Karin A Ferriter
pp

Karin Ferriter
Senior Legal Advisor
Office of Patent Legal Administration
Office of Deputy Commissioner
for Patent Examination Policy

Enclosure: Copy of DRAFT Certificate of Correction

UNITED STATES PATENT AND TRADEMARK OFFICE

Commissioner for Patents
United States Patent and Trademark Office
P.O. Box 1450
Alexandria, VA 22313-1450
www.uspto.gov

DUANE MORRIS LLP - Atlanta
IP DEPARTMENT
ATLANTIC CENTER PLAZA
1180 WEST PEACHTREE STREET, NW SUITE 700
ATLANTA GA 30309-3348

COPY MAILED

OCT 13 2009

OFFICE OF PETITIONS

ON PETITION

In re Application of :
Gronemeyer, et al. :
Application No. 10/369,853 :
Filed: February 19, 2003 :
Attorney Docket No. B1234-00011 :
For: SERIAL RADIO FREQUENCY TO BASEBAND INTERFACE WITH PROGRAMMABLE CLOCK

This is a decision on the petition under 37 CFR 1.137(b), filed September 3, 2009, to revive the above-identified application.

This application became abandoned for failure to properly respond to the final Office action, mailed January 8, 2009, which set an extendable three month period for reply. Applicants submitted a three month extension of time and an amendment after final on June 22, 2009. Applicants submitted a supplemental amendment on July 8, 2009. The amendment after final failed to place this application in *prima facie* condition for allowance, as was explained in the August 17, 2009 Advisory action. Accordingly, this application became abandoned on July 9, 2009. A Notice of Abandonment was mailed on August 25, 2009.

Applicants have submitted a RCE and $81.00 required fee and a request to use the previously filed amendment of July 8, 2009 as the submission in reply to the January 8, 2009 final Office action, an acceptable statement of the unintentional nature of the delay in responding to the January 8, 2009 final Office action, and the $1,620.00 petition fee.

The petition is **GRANTED**.

This application is being referred to Technology Center AU 2611 for processing of the RCE and for appropriate action by the Examiner in the normal course of business on the amendment previously submitted.

Telephone inquiries pertaining to this decision may be directed to the undersigned at (571) 272-3230.

Shirene Willis Brantley

Shirene Willis Brantley
Senior Petitions Attorney
Office of Petitions

UNITED STATES PATENT AND TRADEMARK OFFICE

COMMISSIONER FOR PATENTS
UNITED STATES PATENT AND TRADEMARK OFFICE
P.O. BOX 1450
ALEXANDRIA, VA 22313-1450www.uspto.gov

Paper No. 5

SARAH PETER
11352 THURSTON PLACE
LOS ANGELES, CA 90049

COPY MAILED

MAR 3 0 2004

OFFICE OF PETITIONS

In re Application of
Peter et al.
Application No. 10/369,861
Filed: February 21, 2003
For: USE OF IMAGING INNOVATIONS FOR DESIGN AND MODIFICATION

ON PETITION

This decision concerns the March 19, 2004 correspondence which encloses a $55 petition fee and requests revival of the above-referenced application. The correspondence is being properly treated as a petition under 37 CFR 1.137(a) to revive this application.

The petition is **DISMISSED.**

On April 4, 2003, the Office of Initial Patent Examination (OIPE) mailed a Notice to File Corrected Application Papers ("4/4/03 Notice"), stating that replacement drawings in compliance with the margins requirements of 37 CFR 1.84 must be timely submitted to avoid abandonment of this application.[1] An extendable 2-month period was provided for submitting replacement drawings. In other words, Applicant had until November 4, 2003 to file the requested drawings along with the requisite extension-of-time fee.[2] The drawings were not filed on or before November 4, 2003, and no extension of time under 37 CFR 1.136(a) was obtained. The application became abandoned on June 5, 2003.

---

1 MPEP section 507 (Rev. 1, Feb. 2003) (To implement 18-month pre-grant publication of patent applications, the USPTO has revised its drawing review process such that drawings in new utility/plant applications filed on or after 11/29/00, which is the case here, are initially reviewed by OIPE to see if they can be effectively scanned and adequately reproduced. If the drawings are not acceptable, OIPE will object to the drawings, and notify the applicant to timely submit acceptable drawings to ensure timely publication of the application . . . [C]orrected drawings must be [timely] filed . . . to avoid abandonment of the application.).

Also, 37 CFR 1.85(a) (A utility/plant application will not be placed on the files for examination until objections to the drawings have been corrected); and MPEP section 608.02(a) (Rev. 1, Feb. 2003) (OIPE will not release applications to the Technology Centers [for examination] until acceptable drawings are filed . . . If a drawing is not timely received [by the PTO] in reply to a notice . . . , the application becomes abandoned for failure to reply.).

2 See MPEP 710.02(d) (Rev. 1, Feb. 2003).

Implied petition to withdraw the holding of abandonment

The instant petition alleges non-receipt of the 4/4/03 Notice, implying that had it been received, Applicant would have timely filed replacement drawings, and the application would not have become abandoned.

A grantable petition to withdraw the holding of abandonment, alleging non-receipt of an Office action which is the cause of the abandonment, must overcome a strong presumption that the Office action at issue, duly addressed and indicated as mailed, was timely delivered to the addressee.[3] The showing required to overcome this presumption consists of:[4]

(1) a statement from the applicant:
  (A) stating that the Office action was not received by the applicant;
  (B) attesting, by referencing the docket record in (2) below, that a search of the relevant docket records indicates that the Office action was not received; and
(2) a copy of the docket record where the allegedly non-received Office action would have been docketed had it been received.

The petition lacks items (1)(B) and (2). The holding of abandonment in this application is not withdrawn.

Petition under 37 CFR 1.137(a)

Applicant asserts unintentional delay (which requires a $665 petition fee for a small entity) but encloses a $55 petition fee, which is the fee amount for a petition under 37 CFR 1.137(a) to revive the application under the "unavoidable delay" standard.

A grantable petition under 37 CFR 1.137(a), in the instant case, must include:

(1) the **replacement drawings required by the 4/4/03 Notice**;
(2) the $55 petition fee (small entity);[5]
(3) a **showing** to the satisfaction of the Commissioner that the entire delay in filing the required replacement drawings from the due date until the filing of a grantable §1.137(a) petition was unavoidable.[6]

---

3 1156 OG 53 (Oct. 25, 1993). The 4/4/03 Notice was mailed to the correspondence-address-of-record for this application.

4 *Id.*

5 Enclosed with petition.

6 An intentional delay in seeking the revival of an abandoned application precludes a finding of unavoidable delay under 37 CFR 1.137(a). See MPEP section 711.03(c)(III)(D) (Rev. 1, Feb. 2003); 35 U.S.C. 133; Douglas v. Manbeck, 21 U.S.P.Q.2d 1697; 1991 U.S. Dist. LEXIS 16404, 16412-

The petition lacks item (1), replacement drawings. As delineated in the paragraphs below, the petition also lacks item (3).

In prosecuting a patent application, the applicant is required to exercise **diligence** generally observed by prudent men in relation to their most important business.[7] An application becomes abandoned if the applicant fails to timely respond to an outstanding Office action.[8] To request revival of an application so abandoned, the applicant must show due diligence in prosecuting the application.[9] The applicant also has the burden to show, to the satisfaction of the Commissioner, that the entire delay, including the delay that caused the abandonment as well as the delay in filing a grantable petition to revive, was "unavoidable" despite the applicant's exercise of due diligence.[10]

For example, if an applicant has a routine business practice in place with respect to prosecuting a patent application, but did not timely respond to an Office action due to an error by an employee in performing his clerical function, the delay in responding to the Office action may be considered "unavoidable" if the applicant can show that this employee was sufficiently trained and experienced in performing this function, and that reliance on this employee represented exercise of due diligence.[11]

In the instant case, Applicant is prosecuting this application *pro se*. It is understandable that a less formal procedure may be in place for prosecuting this application. However, while failing to prove non-receipt of the 4/4/03 Notice, the petition has not presented any evidence that Applicant has exercised due diligence in prosecuting this application, and that some extraordinary circumstances prevented Applicant from timely responding to the 4/4/03 Notice.

In view of the above, the Office is unable to conclude that the entire delay in filing the replacement drawings was "unavoidable" within the meaning of 37 CFR 1.137(a). The petition is thus dismissed.

---

13 (E.D. Pa. 1991); In re Takao, 1990 Dec. Comm'r Pat. 6, 10 (Comm'r Pat. 1990), 7 U.S.P.Q.2d 1155, citing Ex Parte Naef, 1905 Dec. Comm'r Pat. 121 (Comm'r Pat. 1905).

7 Haines v. Quigg, 673 F.Supp. 314, 317; 5 U.S.P.Q.2d 1130 (N.D. Id. 1987), citing Ex Parte Pratt, 1887 Dec. Comm'r Pat. 31, 32-33 (Comm'r Pat. 1887); In re Mattullath, 38 App. D.C. 497, 510-511; 1912 U.S. App. LEXIS 2157, 2177-78 (D.C. Cir. 1912); Winkler v. Ladd, 221 F.Supp 550, 553; 138 U.S.P.Q. 666 (D.D.C. 1963).

8 37 CFR 1.135.

9 See Douglas v. Manbeck, *supra* note 6, at 16414, citing Futures Technology, Ltd. v. Quigg, 684 F. Supp. 430, 431; 7 U.S.P.Q.2d 1588 (E.D. Va. 1988); Takao, *supra* note 6, at 13-14.

10 Haines v. Quigg, *supra* note 7, at 316.

11 MPEP 711.03(c)(III)(C)(2)(Rev.1 , Feb. 2003).

Options

While a renewed §1.137(a) petition (no fee) may be filed within **TWO MONTHS** of the mailing date of this decision[12] by supplying relevant **new evidence/arguments**, Applicant is strongly urged to seek revival of this application under the unintentional abandonment standards of 37 CFR 1.137(b).[13]

For the instant application, a §1.137(b) petition requires:

-**proper replacement drawings**;[14]
-a **$665 petition fee** (small entity);[15] and
-a **statement** that the **entire** delay in filing the replacement drawings from the due date until the filing of a grantable §1.137(b) petition was unintentional.[16]

While a §1.137(b) petition is not subject to the 2-month limitation, intentionally delaying the filing of such a petition defeats the purpose of this provision and will result in dismissal of the petition.

Blank petition forms (§1.137(a) and §1.137(b)) are attached.

A renewed §1.137(a) petition or a §1.137(b) petition should be addressed as follows:

Mail Stop Petitions
Commissioner for Patents
PO Box 1450
Alexandria, VA 22313-1450

---

12 Extensions of time may be obtained under 37 CFR 1.136(a). See 37 CFR 1.137(e)(1).

13 Such petitions are evaluated under the less stringent "unintentional delay" standard. MPEP section 711.03(c)(III)(C) (Rev. 1, Feb. 2003). The dismissal or denial of a §1.137(a) petition does not preclude an applicant from obtaining relief under §1.137(b) unless the decision dismissing or denying the §1.137(a) petition states otherwise. MPEP section 711.03(c)(III)(C)(2) (Rev. 1, Feb. 2003).

14 37 CFR 1.137(b)(1); a draftsperson's report is attached to provide more details.

15 37 CFR 1.137(b)(2). A fee is required because a §1.137(b) petition is not a renewed §1.137(a) petition.

16 37 CFR 1.137(b)(3). If the filing of such a petition is intentionally delayed, a statement that the entire delay was unintentional is inappropriate and may adversely affect enforcement of the ultimately issued patent. See MPEP 711.03(c)(III)(C) (Rev. 1, Feb. 2003).

Telephone inquiries should be directed to the undersigned at (703) 308-0763.

RC Tang
Petitions Attorney
Office of Petitions

Attachments: Notice to File Corrected Application Papers (4/4/2003; duplicate)
Notice of Draftsperson's Patent Drawing Review (3/29/04)
Form PTO/SB/61
Form PTO/SB/64

UNITED STATES PATENT AND TRADEMARK OFFICE

Commissioner for Patents
United States Patent and Trademark Office
P.O. Box 1450
Alexandria, VA 22313-1450www.uspto.gov

Paper No. 8

SARAH PETER
11352 THURSTON PLACE
LOS ANGELES, CA 90049

COPY MAILED

JUN 0 2 2004

OFFICE OF PETITIONS

ON PETITION

In re Application of :
Peter et al. :
Application No. 10/369,861 :
Filed: February 21, 2003 :
For: USE OF IMAGING INNOVATIONS FOR :
DESIGN AND MODIFICATION :

This decision concerns the May 10, 2004 petition under 37 CFR 1.137(b) to revive the above-referenced application.

The petition is **GRANTED.**

The application became abandoned on June 5, 2003 for failure to timely submit replacement drawings as required by the April 4, 2003 Notice to File Corrected Application Papers.

The instant petition encloses the $665 petition fee (small entity), a set of replacement drawings which have been approved by the draftsperson, and a statement that the entire delay in filing the requested drawings was unintentional. The petition is thus granted.

The application is now complete.

The file is being forwarded to Technology Center 2800 for examination in due course.

Telephone inquiries should be directed to the undersigned at (703) 308-0763.

RC Tang
Petitions Attorney
Office of Petitions

UNITED STATES PATENT AND TRADEMARK OFFICE

COMMISSIONER FOR PATENTS
UNITED STATES PATENT AND TRADEMARK OFFICE
P.O. BOX 1450
ALEXANDRIA, VA 22313-1450
www.uspto.gov

BURNS DOANE SWECKER & MATHIS L L P
POST OFFICE BOX 1404
ALEXANDRIA, VA 22313-1404

COPY MAILED

MAR 18 2005

OFFICE OF PETITIONS

In re Application of :
Viguerie : DECISION ON PETITION
Application No. 10/369,903 :
Filed: February 18, 2003 :
Atty. Dkt. No.: 2501762-991020 :

This decision is in response to the petition under 37 CFR 1.137(b), filed March 8, 2005.

The petition under 37 CFR 1.137(b) is **GRANTED**.

This application became abandoned November 6, 2004 for failure to timely submit a proper reply to the final Office action mailed May 5, 2004. The final Office action set a three (3) month shortened statutory period of time for reply. An improper Request for Continued Examination and petition for extension of time were submitted November 3, 2004. Notice of Improper RCE was mailed November 16, 2004. Notice of Abandonment was mailed February 9, 2005.

A grantable petition under 37 CFR 1.137(b) must be accompanied by: (1) the required reply; (2) the petition fee as set forth in 37 CFR 1.17(m); (3) a statement that the entire delay in filing the required reply from the due date of the reply until the filing of a grantable petition was unintentional. The Commissioner may require additional information where there is a question whether the delay was unintentional; and (4) any terminal disclaimer (and fee as set forth in 37 CFR 1.20(d)) required pursuant to paragraph (d) of this section.

The instant petition has been reviewed and found in compliance with the provisions of 37 CFR 1.137(b). Accordingly, the failure to timely reply to the final Office action mailed May 5, 2004 is accepted as having been unintentionally delayed.

This application file is being forwarded to Technology Center 1600 for processing of the RCE submitted herewith.

Telephone inquiries related to this decision may be directed to the undersigned at (571) 272-3205.

Alesia M. Brown
Petitions Attorney
Office of Petitions

UNITED STATES PATENT AND TRADEMARK OFFICE

MAR 23 2007

Commissioner for Patents
United States Patent and Trademark Office
P.O. Box 1450
Alexandria, VA 22313-1450
www.uspto.gov

HELLER EHRMAN LLP
275 MIDDLEFIELD ROAD
MENLO PARK CA 94025-3506

In re Application of	:
J. Christopher Grimaldi et al	:
Serial No.: 10/369,904	: PETITION DECISION
Filed: February 18, 2003	:
Attorney Docket No.: 39780-3044	:

This is a decision on the PETITION FOR ACCEPTANCE OF COLOR DRAWINGS UNDER 37 CFR 1.84(a)(2). The petition was filed February 20, 2007. Entry of color drawings requires: 1) three sets of the color drawings, 2) a proper amendment to the specification indicating color photographs or drawings are present in the file, and 3) the required fee under 37 CFR 1.17(h).

A review of the application record indicates that the petition meets all of the requirements for acceptance of color drawings. This is not to be construed that all of the drawings are accepted, only that the color drawings are acceptable.

The petition is **GRANTED**.

Should there be any questions with respect to this decision, please contact William R. Dixon, Jr., by mail addressed to: Director, Technology Center 1600, at the address listed above, or by telephone at 571-272-0519 or by facsimile transmission at 571-273-8300.

William R. Dixon, Jr.
Special Program Examiner
Technology Center 1600

UNITED STATES PATENT AND TRADEMARK OFFICE

UNITED STATES DEPARTMENT OF COMMERCE
United States Patent and Trademark Office
Address: COMMISSIONER FOR PATENTS
P.O. Box 1450
Alexandria, Virginia 22313-1450
www.uspto.gov

Alan J. Grant, Esq.
c/o Carella, Byrne, Bain, Gilfillan,
Cecchi, Stewart & Olstein
6 Becker Farm Road
Roseland, NJ 07068

Mail Date: 04/21/2010

Applicant	: Marcia L. MacDonald	: DECISION ON REQUEST FOR
Patent Number	: 7659082	: RECALCULATION of PATENT
Issue Date	: 02/09/2010	: TERM ADJUSTMENT IN VIEW
Appliction No	: 10/369,909	: OF WYETH AND NOTICE OF INTENT TO
Filed	: 02/19/2003	: ISSUE CERTIFICATE OF CORRECTION
		:

The Request for Recalculation is **GRANTED** to the extent indicated.

The patent term adjustment has been determined to be **546** days. The USPTO will *sua sponte* issue a certificate of correction reflecting the amount of PTA days determined by the recalculation.

Prior to the issuance of the certificate of correction, the USPTO will afford patentee an opportunity to be heard and request reconsideration. Accordingly, patentee has **one month or thirty (30) days**, whichever is longer, to file a request for reconsideration of this patent term adjustment calculation. See 35 U.S.C. 154(b)(3)(B)(ii) and 37 CFR 1.322(a)(4). No extensions of time will be granted under 37 CFR 1.136.

Patentee should use document code PET.OP if electronically filing a request for reconsideration of this patent term adjustment calculation. The patentee must also include the information required by 37 CFR 1.705(b)(2) and the fee required by 37 CFR 1.18(e). If patentee does not file a timely request for reconsideration of this patent term adjustment calculation including the information required by 37 CFR 1.705(b)(2) and the fee required by 37 CFR 1.18(e), the USPTO will issue a certificate of correction reflecting the PTA determination noted above.

Patentee should be aware that in order to preserve the right to review in the United States District Court for the District of Columbia of the USPTO patent term adjustment determination, patentee must ensure that he or she also take the steps required under 35 U.S.C. 154(b)(4)(A) in a timely manner. Nothing in the request for recalculation should be construed as providing an alternative time frame for commencing a civil action under 35 U.S.C. 154(b)(4)(A).

Any questions concerning this decision should be directed to the Office of Patent Legal Administration at 571-272-7702.

UNITED STATES PATENT AND TRADEMARK OFFICE

Commissioner for Patents
United States Patent and Trademark Office
P.O. Box 1450
Alexandria, VA 22313-1450
www.uspto.gov

AGILENT TECHNOLOGIES, INC.
LEGAL DEPARTMENT, DL429
INTELLECTUAL PROPERTY ADMINISTRATION
P.O. BOX 7599
LOVELAND CO 80537-0599

COPY MAILED

AUG 17 2005

OFFICE OF PETITIONS

In re Application of	:
Yee Loong Chin et al	:
Application No. 10/369,942	: DECISION GRANTING PETITION
Filed: February 20, 2003	: UNDER 37 CFR 1.137(b)
Attorney Docket No. 70011373-2	:

This is a decision on the petition under 37 CFR 1.137(b), filed June 22, 2005, to revive the above-identified application.

The petition is **GRANTED**.

The petition satisfies the conditions for revival pursuant to the provisions of 37 CFR 1.137(b) in that (1) the reply; (2) the petition fee; and (3) the required statement of unintentional delay have been received. Accordingly, the reply to the nonfinal Office action of December 15, 2004, is accepted as having been unintentionally delayed.

There is no indication that the person signing the instant petition was ever given a power of attorney or authorization of agent to prosecute the above-identified application. If the person signing the instant petition desires to receive future correspondence regarding this application, the appropriate power of attorney or authorization of agent must be submitted. While a courtesy copy of this decision is being mailed to the person signing the instant petition, all future correspondence will be directed to the address currently of record until such time as appropriate instructions are received to the contrary.

Telephone inquiries concerning this decision should be directed to the undersigned at (571) 272-3208.

This matter is being referred to Technology Center AU 2878.

Karen Creasy

Karen Creasy
Petitions Examiner
Office of Petitions
Office of the Deputy Commissioner
for Patent Examination Policy

cc:
D. JAMES CHUNG
6601 KOLL CENTER PARKWAY, SUITE 245
PLEASANTON, CA 94566

UNITED STATES PATENT AND TRADEMARK OFFICE

COMMISSIONER FOR PATENTS
UNITED STATES PATENT AND TRADEMARK OFFICE
P.O. BOX 1450
ALEXANDRIA, VA 22313-1450
www.uspto.gov

Townsend and Townsend and Crew, LLP
Two Embarcadero Center, Eighth Floor
San Francisco, CA 94111-3834

COPY MAILED

MAR 1 1 2005

OFFICE OF PETITIONS

In re Application of	:	
Hubert Uhl, et al.	:	
Application No. 10/369,979	:	ON PETITION
Filed: February 18, 2003	:	
Attorney Docket No. 089493-000000US	:	

This is a decision on the petition under 37 CFR 1.137(b), filed February 9, 2005, to revive the above-identified application.

The petition is **GRANTED**.

Telephone inquiries concerning this decision should be directed to the undersigned at (571) 272-3223.

The application file is being referred to the Publishing Division to be processed into a patent.

Marianne E. Jenkins
Petitions Examiner
Office of Petitions
Office of the Deputy Commissioner
for Patent Examination Policy

UNITED STATES PATENT AND TRADEMARK OFFICE

COMMISSIONER FOR PATENTS
UNITED STATES PATENT AND TRADEMARK OFFICE
P.O. BOX 1450
ALEXANDRIA, VA 22313-1450
www.uspto.gov

FENWICK & WEST LLP
SILICON VALLEY CENTER
801 CALIFORNIA STREET
MOUNTAIN VIEW, CA 94041

COPY MAILED
JUN 2 3 2006
OFFICE OF PETITIONS

In re Application of	:	
Albert K. Chin	:	
Application No. 10/369,980	:	ON PETITION
Filed: February 18, 2003	:	
Attorney Docket No.: 23488-07379	:	

This is a decision on the petition, filed June 16, 2006, under 37 CFR 1.313(c)(2) to withdraw the above-identified application from issue after payment of the issue fee.

The petition is **GRANTED**.

The above-identified application is withdrawn from issue for consideration of a submission under 37 CFR 1.114 (request for continued examination). See 37 CFR 1.313(c)(2).

Petitioner is advised that the issue fee paid on December 27, 2005, in the above-identified application cannot be refunded. If, however, the above-identified application is again allowed, petitioner may request that it be applied towards the issue fee required by the new Notice of Allowance. [1]

Telephone inquiries relating to this decision should be directed to the undersigned at (571) 272-3204.

The application is being referred to Technology Center AU 3731 for further processing of the request for continued examination under 37 CFR 1.114.

Sherry D. Brinkley
Petitions Examiner
Office of Petitions

[1]The request to apply the issue fee to the new Notice may be satisfied by completing and returning the new Issue Fee Transmittal Form PTOL-85(b), which includes the following language thereon: " Commissioner for Patents is requested to apply the Issue Fee and Publication Fee (if any) or re-apply any previously paid issue fee to the application identified above." Petitioner is advised that, whether a fee is indicated as being due or not, the Issue Fee Transmittal Form **must** be completed and timely submitted to avoid abandonment. Note the language in bold text on the first page of the Notice of Allowance and Fee(s) Due (PTOL-85).

UNITED STATES PATENT AND TRADEMARK OFFICE

Commissioner for Patents
United States Patent and Trademark Office
P.O. Box 1450
Alexandria, VA 22313-1450
www.uspto.gov

FENWICK & WEST LLP
SILICON VALLEY CENTER
801 CALIFORNIA STREET
MOUNTAIN VIEW CA 94041

COPY MAILED

MAY 17 2007

OFFICE OF PETITIONS

In re Application of	:	
Albert K. Chin	:	
Application No. 10/369,980	:	DECISION ON PETITION
Filed: February 18, 2003	:	TO WITHDRAW
Attorney Docket No. 23488-07379	:	FROM RECORD
	:	

This is a decision on the Request to Withdraw as attorney or agent of record under 37 C.F.R. § 1.36(b) filed December 18, 2006.

The request is **APPROVED**.

A grantable request to withdraw as attorney/agent of record must be signed by every attorney/agent seeking to withdraw or contain a clear indication that one attorney is signing on behalf of another/others. A request to withdraw will not be approved unless at least 30 (thirty) days would remain between the date of approval and the later of the expiration date of a time to file a response or the expiration date of the maximum time period which can be extended under 37 C.F.R. § 1.136(a).

The request was signed by Albert C. Smith on behalf of all attorneys of record who are associated with this application.

All attorneys/agents associated with this application have been withdrawn.

Applicant is reminded that there is no attorney of record at this time.

The request to change the correspondence of record is not acceptable as the requested correspondence address is not that of: (1) the first named signing inventor; or (2) an intervening assignee of the entire interest under 37 C.F.R 3.71. All future communications from the Office will be directed to the first named signing inventor at the first copied address below until otherwise properly notified by the applicant.

In order to request or take action in a patent matter, the assignee must establish its ownership of the patent to the satisfaction of the Director. In this regard, a Statement under 37 CFR 3.73(b) must

have either: (i) documentary evidence of a chain of title from the original owner to the assignee (*e.g.*, copy of an executed assignment), and a statement affirming that the documentary evidence of the chain of title from the original owner to the assignee was or concurrently is being submitted for recordation pursuant to § 3.11; or (ii) a statement specifying where documentary evidence of a chain of title from the original owner to the assignee is recorded in the assignment records of the Office (*e.g.*, reel and frame number).

There are no pending Office actions at the present time.

Telephone inquiries concerning this decision should be directed to undersigned at 571-272-1642.

April M. Wise
Petitions Examiner
Office of Petitions

cc: ALBERT K. CHIN
2021 NEWELL ROAD
PALO ALTO, 94303

cc: JASON R. KRAUS
FAEGRE & BENSON
2200 WELLS FARGO CENTER
90 SOUTH SEVENTH STREET
MINNEAPOLIS, MN 55402-3901

UNITED STATES PATENT AND TRADEMARK OFFICE

UNITED STATES DEPARTMENT OF COMMERCE
United States Patent and Trademark Office
Address: COMMISSIONER FOR PATENTS
P.O. Box 1450
Alexandria, Virginia 22313-1450
www.uspto.gov

APPLICATION NUMBER	FILING OR 371 (c) DATE	FIRST NAMED APPLICANT	ATTY. DOCKET NO./TITLE
10/369,980	02/18/2003	Albert K. Chin	23488-07379

CONFIRMATION NO. 1594

OC000000023780317

758
FENWICK & WEST LLP
SILICON VALLEY CENTER
801 CALIFORNIA STREET
MOUNTAIN VIEW, CA 94041

Date Mailed: 05/09/2007

NOTICE REGARDING CHANGE OF POWER OF ATTORNEY

This is in response to the Power of Attorney filed 12/18/2006.

- The withdrawal as attorney in this application has been accepted. Future correspondence will be mailed to the new address of record. 37 CFR 1.33.

April Mouse

Office of Initial Patent Examination (571) 272-4000, or 1-800-PTO-9199
FORMER ATTORNEY/AGENT COPY

UNITED STATES PATENT AND TRADEMARK OFFICE

Commissioner for Patents
United States Patent and Trademark Office
P.O. Box 1450
Alexandria, VA 22313-1450
www.uspto.gov

FAEGRE & BENSON, LLP
BOSTON SCIENTIFIC PATENT DOCK
2200 WELLS FARGO CENTER
90 SOUTH SEVENTH STREET
MINNEAPOLIS, MN 55402-3901

COPY MAILED

AUG 13 2007

OFFICE OF PETITIONS

In re Application of	:	
Albert K. Chin	:	
Application No. 10/369,980	:	DECISION ON PETITION
Filed: February 18, 2003	:	
Attorney Docket No. 340511	:	

This is a decision on the petition under the unintentional provisions of 37 CFR 1.137(b), filed February 6, 2007, to revive the above-identified application.

The petition is **GRANTED**.

This application became abandoned for failure to timely pay the issue on or before January 3, 2007, as required by the Notice of Allowance and Fee(s) Due, mailed October 3, 2006. Accordingly, the date of abandonment of this application is January 4, 2007.

The petition satisfies the requirements of 37 CFR 1.137(b) in that petitioner has supplied (1) the reply in the form of payment of the issue fee of $1400 (2) the petition fee of $1500; and (3) a proper statement of unintentional delay.

It is not apparent whether the person signing the statement of unintentional delay was in a position to have firsthand or direct knowledge of the facts and circumstances of the delay at issue. Nevertheless, such statement is being treated as having been made as the result of a reasonable inquiry into the facts and circumstances of such delay. See 37 CFR 10.18(b) and Changes to Patent Practice and Procedure; Final Rule Notice, 62 Fed. Reg. 53131, 53178 (October 10, 1997), 1203 Off. Gaz. Pat. Office 63, 103 (October 21, 1997). In the event that such an inquiry has not been made, petitioner must make such an inquiry. If such inquiry results in the discovery that it is not correct that the entire delay in filing the required reply from the due date for the reply until the filing of a grantable petition pursuant to 37 CFR 1.137(b) was unintentional, petitioner must notify the Office.

There is no indication that the person signing the petition was ever given a power of attorney to prosecute the application. If the person signing the petition desires to receive future correspondence regarding this application, the appropriate power of attorney document must be submitted. While a courtesy copy of this decision is being mailed to the person signing the

petition, all future correspondence will be directed to the address currently of record until appropriate instructions are received.

Telephone inquiries concerning this decision should be directed to April Wise at (571) 272-1642.

This application is being referred to Publishing Division for processing into a patent.

Irvin Dingle
Petitions Examiner
Office of Petitions

Cc: JASON R. KRAUS
2200 WELLS FARGO CENTER
90 S. 7TH STREET
MINNEAPOLIS, MN 55402

UNITED STATES PATENT AND TRADEMARK OFFICE

Commissioner for Patents
United States Patent and Trademark Office
P.O. Box 1450
Alexandria, VA 22313-1450
www.uspto.gov

THOMAS J. PERKOWSKI, ESQ., P.C.
SOUNDVIEW PLAZA
1266 EAST MAIN STREET
STAMFORD CT 06902

COPY MAILED

FEB 10 2006

OFFICE OF PETITIONS

In re Patent No. 6,948,328 :
Issue Date: September 27, 2005 :
Application No. 10/370,035 :
Filed: February 18, 2003 :
Attorney Docket No. 110-001USANEO :

ON PETITION

This is a decision on the petition filed November 14, 2005, under 37 CFR 3.81(b)[1] to correct the assignee on the front page of the above-identified patent by way of a Certificate of Correction.

The petition is granted.

Telephone inquiries concerning this matter may be directed to the undersigned at (571) 272-3208. Any questions concerning the issuance of the Certificate of Correction should be directed to the Certificates of Correction Branch at (703) 305-8309.

This matter is being referred to the Certificates of Correction Branch for issuance of the requested Certificate of Correction.

Karen Creasy

Karen Creasy
Petitions Examiner
Office of Petitions
Office of the Deputy Commissioner
for Patent Examination Policy

[1]See Official Gazette of June 22, 2004

UNITED STATES PATENT AND TRADEMARK OFFICE

Commissioner for Patents
United States Patent and Trademark Office
P.O. Box 1450
Alexandria, VA 22313-1450
www.uspto.gov

STAAS & HALSEY LLP
1201 NEW YORK AVENUE NW
SUITE 700
WASHINGTON, DC 20005

COPY MAILED

JUN 23 2005

OFFICE OF PETITIONS

In re Application of
Nutan Prasad
Application No. 10/370,053
Filed: February 21, 2003
Attorney Docket No. 1693.1007

DECISION GRANTING PETITION
UNDER 37 CFR 1.313(c)(2)

This is a decision on the petition, filed June 21, 2005, under 37 CFR 1.313(c)(2) to withdraw the above-identified application from issue after payment of the issue fee.

The petition is **GRANTED**.

The above-identified application is withdrawn from issue for consideration of a submission under 37 CFR 1.114 (request for continued examination). See 37 CFR 1.313(c)(2).

Petitioner is advised that the issue fee paid on June 1, 2005 in the above-identified application cannot be refunded. If, however, the above-identified application is again allowed, petitioner may request that it be applied towards the issue fee required by the new Notice of Allowance.[1]

Telephone inquiries should be directed to the undersigned at (571) 272-3218.

This matter is being referred to Technology Center AU 2825 for processing of the request for continued examination under 37 CFR 1.114 and for consideration of the concurrently filed amendment.

Frances Hicks
Petitions Examiner
Office of Petitions
Office of the Deputy Commissioner
for Patent Examination Policy

---

[1] *The request to apply the issue fee to the new Notice may be satisfied by completing and returning the new Issue Fee Transmittal Form PTOL-85(b), which includes the following language thereon: "Commissioner for Patents is requested to apply the Issue Fee and Publication Fee (if any) or re-apply any previously paid issue fee to the application identified above." Petitioner is advised that, whether a fee is indicated as being due or not, the Issue Fee Transmittal Form* ***must*** *be completed and timely submitted to avoid abandonment. Note the language in bold text on the first page of the Notice of Allowance and Fee(s) Due (PTOL-85).*

PTO/SB/66 (03-09)
Approved for use through 03/31/2012. OMB 0651-0016
U.S. Patent and Trademark Office: U.S. DEPARTMENT OF COMMERCE
Under the Paperwork Reduction Act of 1995, no persons are required to respond to a collection of information unless it displays valid OMB control number.

PETITION TO ACCEPT UNINTENTIONALLY DELAYED PAYMENT OF MAINTENANCE FEE IN AN EXPIRED PATENT (37 CFR 1.378(c))

Patent Number	Issue Date (YYYY-MM-DD)	Application Number	Filing Date (YYYY-MM-DD)	Docket Number (if applicable)
6895333	2005-05-17	10370056	2003-02-21	4590-119

CAUTION: Maintenance fee (and surcharge, if any) payment must correctly identify: (1) the patent number and (2) the application number of the actual U.S. application leading to issuance of that patent to ensure the fee(s) is/are associated with the correct patent. 37 CFR 1.366(c) and (d).

SMALL ENTITY
☐ Patentee claims, or has previously claimed, small entity status. See 37 CFR 1.27.

LOSS OF ENTITLEMENT TO SMALL ENTITY STATUS
☐ Patentee is no longer entitled to small entity status. See 37 CFR 1.27(g)

NOT Small Entity		Small Entity	
Fee	Code	Fee	Code
◉ 3 ½ year	(1551)	○ 3 ½ year	(2551)
○ 7 ½ year	(1552)	○ 7 ½ year	(2552)
○ 11 ½ year	(1553)	○ 11 ½ year	(2553)

SURCHARGE
The surcharge required by 37 CFR 1.20(i)(2) (Fee Code 1558) must be paid as a condition of accepting unintentionally delayed payment of the maintenance fee.

MAINTENANCE FEE (37 CFR 1.20(e)-(g))
The appropriate maintenance fee must be submitted with this petition.

STATEMENT
THE UNDERSIGNED CERTIFIES THAT THE DELAY IN PAYMENT OF THE MAINTENANCE FEE TO THIS PATENT WAS UNINTENTIONAL

PETITIONER(S) REQUEST THAT THE DELAYED PAYMENT OF THE MAINTENANCE FEE BE ACCEPTED AND THE PATENT REINSTATED

THIS PORTION MUST BE COMPLETED BY THE SIGNATORY OR SIGNATORIES

37 CFR 1.378(d) states: "Any petition under this section must be signed by an attorney or agent registered to practice before the Patent and Trademark Office, or by the patentee, the assignee, or other party in interest."

I certify, in accordance with 37 CFR 1.4(d)(4) that I am

◉ An attorney or agent registered to practice before the Patent and Trademark Office

○ A sole patentee

○ A joint patentee; I certify that I am authorized to sign this submission on behalf of all the other patentees.

○ A joint patentee; all of whom are signing this e-petition

○ The assignee of record of the entire interest

Patent Practitioner			
A signature of the applicant or representative is required in accordance with 37 CFR 1.33 and 10.18. Please see 37 CFR 1.4(d) for the form of the signature			
Signature	/Kenneth M. Berner/	Date (YYYY-MM-DD)	2009-10-20
Name	Kenneth M. Berner	Registration Number	37093

This collection of information is required by 37 CFR 1.378(c). The information is required to obtain or retain a benefit by the public which is to file (and by the USPTO to process) an application. Confidentiality is governed by 35 U.S.C. 122 and 37 CFR 1.11 and 1.14. This collection is estimated to take 1 hour to complete, including gathering, preparing, and submitting the completed application form to the USPTO. Time will vary depending upon the individual case. Any comments on the amount of time you require to complete this form and/ or suggestions for reducing this burden, should be sent to the Chief Information Officer, U.S. Patent and Trademark Office, U.S. Department of Commerce, P.O. Box 1450, Alexandria, VA 22313-1450. DO NOT SEND FEES OR COMPLETED FORMS TO THIS ADDRESS. **This form can only be used when in conjunction with EFS-Web. If this form is mailed to the USPTO, it may cause delays in reinstating the patent.**

Privacy Act Statement

The Privacy Act of 1974 (P.L. 93-579) requires that you be given certain information in connection with your submission of the attached form related to a patent application or patent. Accordingly, pursuant to the requirements of the Act, please be advised that: (1) the general authority for the collection of this information is 35 U.S.C. 2(b)(2); (2) furnishing of the information solicited is voluntary; and (3) the principal purpose for which the information is used by the U.S. Patent and Trademark Office is to process and/or examine your submission related to a patent application or patent. If you do not furnish the requested information, the U.S. Patent and Trademark Office may not be able to process and/or examine your submission, which may result in termination of proceedings or abandonment of the application or expiration of the patent.

The information provided by you in this form will be subject to the following routine uses:

1. The information on this form will be treated confidentially to the extent allowed under the Freedom of Information Act (5 U.S.C. 552) and the Privacy Act (5 U.S.C. 552a). Records from this system of records may be disclosed to the Department of Justice to determine whether the Freedom of Information Act requires disclosure of these records.

2. A record from this system of records may be disclosed, as a routine use, in the course of presenting evidence to a court, magistrate, or administrative tribunal, including disclosures to opposing counsel in the course of settlement negotiations.

3. A record in this system of records may be disclosed, as a routine use, to a Member of Congress submitting a request involving an individual, to whom the record pertains, when the individual has requested assistance from the Member with respect to the subject matter of the record.

4. A record in this system of records may be disclosed, as a routine use, to a contractor of the Agency having need for the information in order to perform a contract. Recipients of information shall be required to comply with the requirements of the Privacy Act of 1974, as amended, pursuant to 5 U.S.C. 552a(m).

5. A record related to an International Application filed under the Patent Cooperation Treaty in this system of records may be disclosed, as a routine use, to the International Bureau of the World Intellectual Property Organization, pursuant to the Patent Cooperation Treaty.

6. A record in this system of records may be disclosed, as a routine use, to another federal agency for purposes of National Security review (35 U.S.C. 181) and for review pursuant to the Atomic Energy Act (42 U.S.C. 218(c)).

7. A record from this system of records may be disclosed, as a routine use, to the Administrator, General Services, or his/her designee, during an inspection of records conducted by GSA as part of that agency's responsibility to recommend improvements in records management practices and programs, under authority of 44 U.S.C. 2904 and 2906. Such disclosure shall be made in accordance with the GSA regulations governing inspection of records for this purpose, and any other relevant (i.e., GSA or Commerce) directive. Such disclosure shall not be used to make determinations about individuals.

8. A record from this system of records may be disclosed, as a routine use, to the public after either publication of the application pursuant to 35 U.S.C. 122(b) or issuance of a patent pursuant to 35 U.S.C. 151. Further, a record may be disclosed, subject to the limitations of 37 CFR 1.14, as a routine use, to the public if the record was filed in an application which became abandoned or in which the proceedings were terminated and which application is referenced by either a published application, an application open to public inspections or an issued patent.

9. A record from this system of records may be disclosed, as a routine use, to a Federal, State, or local law enforcement agency, if the USPTO becomes aware of a violation or potential violation of law or regulation.

UNITED STATES PATENT AND TRADEMARK OFFICE

Commissioner for Patents
United States Patent and Trademark Office
P.O. Box 1450
Alexandria, VA 22313-1450
www.uspto.gov

In re Patent No. 6895333
Issue Date: May 17,2005
Application No. 10370056
Filed: February 21,2003
Attorney Docket No. 4590-119

:

:DECISION GRANTING PETITION
:UNDER 37 CFR 1.378(c)

:

This is a decision on the electronic petition, filed October 20,2009 ,under 37 CFR 1.378(c) to accept the unintentionally delayed payment of the 3.5 year maintenance fee for the above-identified patent.

The petition is **GRANTED**.

The maintenance fee is accepted, and the above-identified patent reinstated as of October 20,2009 .
This decision also constitutes notice that the fee has been accepted. An electronic copy of the petition and this decision has been created as an entry in the Image File Wrapper. Nevertheless, petitioner should print and retain an independent copy.

Telephone inquiries related to this electronic decision should be directed to the Electronic Business Center at 1-866-217-9197.

UNITED STATES PATENT AND TRADEMARK OFFICE

Commissioner for Patents
United States Patent and Trademark Office
P.O. Box 1450
Alexandria, VA 22313-1450
www.uspto.gov

In re Patent No. 6822621
Issue Date: November 23,2004
Application No. 10370057
Filed: February 21,2003
Attorney Docket No. 4590-120

:DECISION GRANTING PETITION
:UNDER 37 CFR 1.378(c)

This is a decision on the electronic petition, filed October 20,2009 ,under 37 CFR 1.378(c) to accept the unintentionally delayed payment of the 3.5 year maintenance fee for the above-identified patent.

The petition is **GRANTED**.

The maintenance fee is accepted, and the above-identified patent reinstated as of October 20,2009 . This decision also constitutes notice that the fee has been accepted. An electronic copy of the petition and this decision has been created as an entry in the Image File Wrapper. Nevertheless, petitioner should print and retain an independent copy.

Telephone inquiries related to this electronic decision should be directed to the Electronic Business Center at 1-866-217-9197.

PTO/SB/66 (03-09)
Approved for use through 03/31/2012. OMB 0651-0016
U.S. Patent and Trademark Office: U.S. DEPARTMENT OF COMMERCE
Under the Paperwork Reduction Act of 1995, no persons are required to respond to a collection of information unless it displays valid OMB control number.

PETITION TO ACCEPT UNINTENTIONALLY DELAYED PAYMENT OF MAINTENANCE FEE IN AN EXPIRED PATENT (37 CFR 1.378(c))

Patent Number	Issue Date (YYYY-MM-DD)	Application Number	Filing Date (YYYY-MM-DD)	Docket Number (if applicable)
6822621	2004-11-23	10370057	2003-02-21	4590-120

CAUTION: Maintenance fee (and surcharge, if any) payment must correctly identify: (1) the patent number and (2) the application number of the actual U.S. application leading to issuance of that patent to ensure the fee(s) is/are associated with the correct patent. 37 CFR 1.366(c) and (d).

SMALL ENTITY
☐ Patentee claims, or has previously claimed, small entity status. See 37 CFR 1.27.

LOSS OF ENTITLEMENT TO SMALL ENTITY STATUS
☐ Patentee is no longer entitled to small entity status. See 37 CFR 1.27(g)

NOT Small Entity		Small Entity	
Fee	Code	Fee	Code
◉ 3 ½ year	(1551)	○ 3 ½ year	(2551)
○ 7 ½ year	(1552)	○ 7 ½ year	(2552)
○ 11 ½ year	(1553)	○ 11 ½ year	(2553)

SURCHARGE
The surcharge required by 37 CFR 1.20(i)(2) (Fee Code 1558) must be paid as a condition of accepting unintentionally delayed payment of the maintenance fee.

MAINTENANCE FEE (37 CFR 1.20(e)-(g))
The appropriate maintenance fee must be submitted with this petition.

STATEMENT
THE UNDERSIGNED CERTIFIES THAT THE DELAY IN PAYMENT OF THE MAINTENANCE FEE TO THIS PATENT WAS UNINTENTIONAL

PETITIONER(S) REQUEST THAT THE DELAYED PAYMENT OF THE MAINTENANCE FEE BE ACCEPTED AND THE PATENT REINSTATED

THIS PORTION MUST BE COMPLETED BY THE SIGNATORY OR SIGNATORIES

37 CFR 1.378(d) states: "Any petition under this section must be signed by an attorney or agent registered to practice before the Patent and Trademark Office, or by the patentee, the assignee, or other party in interest."

I certify, in accordance with 37 CFR 1.4(d)(4) that I am

◉ An attorney or agent registered to practice before the Patent and Trademark Office

○ A sole patentee

○ A joint patentee; I certify that I am authorized to sign this submission on behalf of all the other patentees.

○ A joint patentee; all of whom are signing this e-petition

○ The assignee of record of the entire interest

Patent Practitioner			
A signature of the applicant or representative is required in accordance with 37 CFR 1.33 and 10.18. Please see 37 CFR 1.4(d) for the form of the signature			
Signature	/Kenneth M. Berner/	Date (YYYY-MM-DD)	2009-10-20
Name	Kenneth M. Berner	Registration Number	37093

This collection of information is required by 37 CFR 1.378(c). The information is required to obtain or retain a benefit by the public which is to file (and by the USPTO to process) an application. Confidentiality is governed by 35 U.S.C. 122 and 37 CFR 1.11 and 1.14. This collection is estimated to take 1 hour to complete, including gathering, preparing, and submitting the completed application form to the USPTO. Time will vary depending upon the individual case. Any comments on the amount of time you require to complete this form and/ or suggestions for reducing this burden, should be sent to the Chief Information Officer, U.S. Patent and Trademark Office, U.S. Department of Commerce, P.O. Box 1450, Alexandria, VA 22313-1450. DO NOT SEND FEES OR COMPLETED FORMS TO THIS ADDRESS. **This form can only be used when in conjunction with EFS-Web. If this form is mailed to the USPTO, it may cause delays in reinstating the patent.**

Privacy Act Statement

The Privacy Act of 1974 (P.L. 93-579) requires that you be given certain information in connection with your submission of the attached form related to a patent application or patent. Accordingly, pursuant to the requirements of the Act, please be advised that: (1) the general authority for the collection of this information is 35 U.S.C. 2(b)(2); (2) furnishing of the information solicited is voluntary; and (3) the principal purpose for which the information is used by the U.S. Patent and Trademark Office is to process and/or examine your submission related to a patent application or patent. If you do not furnish the requested information, the U.S. Patent and Trademark Office may not be able to process and/or examine your submission, which may result in termination of proceedings or abandonment of the application or expiration of the patent.

The information provided by you in this form will be subject to the following routine uses:

1. The information on this form will be treated confidentially to the extent allowed under the Freedom of Information Act (5 U.S.C. 552) and the Privacy Act (5 U.S.C. 552a). Records from this system of records may be disclosed to the Department of Justice to determine whether the Freedom of Information Act requires disclosure of these records.

2. A record from this system of records may be disclosed, as a routine use, in the course of presenting evidence to a court, magistrate, or administrative tribunal, including disclosures to opposing counsel in the course of settlement negotiations.

3. A record in this system of records may be disclosed, as a routine use, to a Member of Congress submitting a request involving an individual, to whom the record pertains, when the individual has requested assistance from the Member with respect to the subject matter of the record.

4. A record in this system of records may be disclosed, as a routine use, to a contractor of the Agency having need for the information in order to perform a contract. Recipients of information shall be required to comply with the requirements of the Privacy Act of 1974, as amended, pursuant to 5 U.S.C. 552a(m).

5. A record related to an International Application filed under the Patent Cooperation Treaty in this system of records may be disclosed, as a routine use, to the International Bureau of the World Intellectual Property Organization, pursuant to the Patent Cooperation Treaty.

6. A record in this system of records may be disclosed, as a routine use, to another federal agency for purposes of National Security review (35 U.S.C. 181) and for review pursuant to the Atomic Energy Act (42 U.S.C. 218(c)).

7. A record from this system of records may be disclosed, as a routine use, to the Administrator, General Services, or his/her designee, during an inspection of records conducted by GSA as part of that agency's responsibility to recommend improvements in records management practices and programs, under authority of 44 U.S.C. 2904 and 2906. Such disclosure shall be made in accordance with the GSA regulations governing inspection of records for this purpose, and any other relevant (i.e., GSA or Commerce) directive. Such disclosure shall not be used to make determinations about individuals.

8. A record from this system of records may be disclosed, as a routine use, to the public after either publication of the application pursuant to 35 U.S.C. 122(b) or issuance of a patent pursuant to 35 U.S.C. 151. Further, a record may be disclosed, subject to the limitations of 37 CFR 1.14, as a routine use, to the public if the record was filed in an application which became abandoned or in which the proceedings were terminated and which application is referenced by either a published application, an application open to public inspections or an issued patent.

9. A record from this system of records may be disclosed, as a routine use, to a Federal, State, or local law enforcement agency, if the USPTO becomes aware of a violation or potential violation of law or regulation.

UNITED STATES PATENT AND TRADEMARK OFFICE

Commissioner for Patents
United States Patent and Trademark Office
P.O. Box 1450
Alexandria, VA 22313-1450
www.uspto.gov

BACON & THOMAS, PLLC
625 SLATERS LANE
FOURTH FLOOR
ALEXANDRIA VA 22314

July 3, 2006

In re Application of: Kelly

Serial No.: 11/370,063
Filed: 3/8/2006
For: KERATIN AND SOLUBLE DERIVATIVES THEREOF FOR A NUTRACEUTICAL AND TO REDUCE OXIDATIVE STRESS AND TO REDUCE INFLAMMATION AND TO PROMOTE SKIN HEALTH

DECISION *SUA SPONTE* WITHDRAWING HOLDING OF ABANDONMENT

This is a decision, *sua sponte*, withdrawing the holding of abandonment of the above-identified application.

The decision granting petition under 37 CFR 1.138d mailed on June 9, 2006 was sent in error.

Although no petition or request to withdraw the holding of abandonment in this application has been filed, the Notice of Abandonment/Petition Decision is hereby vacated, the holding of abandonment withdrawn and the application restored to pending status.

Any inquiry regarding this decision should be directed to, Pre Grant Publication at (703) 605-4283.

Kalethis King

UNITED STATES PATENT AND TRADEMARK OFFICE

UNITED STATES DEPARTMENT OF COMMERCE
United States Patent and Trademark Office
Address: COMMISSIONER FOR PATENTS
P.O. Box 1450
Alexandria, Virginia 22313-1450
www.uspto.gov

DICKSTEIN SHAPIRO LLP
1825 EYE STREET NW
Washington, DC 20006-5403

Mail Date: 04/21/2010

Applicant	: Martin V. Haspel	: DECISION ON REQUEST FOR
Patent Number	: 7628996	: RECALCULATION of PATENT
Issue Date	: 12/08/2009	: TERM ADJUSTMENT IN VIEW
Appliction No	: 10/370,081	: OF WYETH AND NOTICE OF INTENT TO
Filed	: 02/21/2003	: ISSUE CERTIFICATE OF CORRECTION
		:

The Request for Recalculation is **GRANTED** to the extent indicated.

The patent term adjustment has been determined to be **939** days. The USPTO will *sua sponte* issue a certificate of correction reflecting the amount of PTA days determined by the recalculation.

Prior to the issuance of the certificate of correction, the USPTO will afford patentee an opportunity to be heard and request reconsideration. Accordingly, patentee has **one month or thirty (30) days**, whichever is longer, to file a request for reconsideration of this patent term adjustment calculation. See 35 U.S.C. 154(b)(3)(B)(ii) and 37 CFR 1.322(a)(4). No extensions of time will be granted under 37 CFR 1.136.

Patentee should use document code PET.OP if electronically filing a request for reconsideration of this patent term adjustment calculation. The patentee must also include the information required by 37 CFR 1.705(b)(2) and the fee required by 37 CFR 1.18(e). If patentee does not file a timely request for reconsideration of this patent term adjustment calculation including the information required by 37 CFR 1.705(b)(2) and the fee required by 37 CFR 1.18(e), the USPTO will issue a certificate of correction reflecting the PTA determination noted above.

Patentee should be aware that in order to preserve the right to review in the United States District Court for the District of Columbia of the USPTO patent term adjustment determination, patentee must ensure that he or she also take the steps required under 35 U.S.C. 154(b)(4)(A) in a timely manner. Nothing in the request for recalculation should be construed as providing an alternative time frame for commencing a civil action under 35 U.S.C. 154(b)(4)(A).

Any questions concerning this decision should be directed to the Office of Patent Legal Administration at 571-272-7702.

UNITED STATES PATENT AND TRADEMARK OFFICE

Commissioner for Patents
United States Patent and Trademark Office
P.O. Box 1450
Alexandria, VA 22313-1450
www.uspto.gov

Schwegman, Lundberg, & Woessner, P.A.
P.O. Box 2938
Minneapolis, MN 55402

COPY MAILED

NOV 15 2007

OFFICE OF PETITIONS

In re Application of	:	
Matthew S. Solar et al.	:	
Application No. 10/370,083	:	DECISION ON PETITION
Filed: February 20, 2003	:	TO WITHDRAW
Attorney Docket No. 50741-000017/US	:	FROM RECORD

This is a decision on the Request to Withdraw as attorney or agent of record under 37 C.F.R. § 1.36(b), filed June 27, 2007.

The request is **APPROVED**.

A grantable request to withdraw as attorney/agent of record must be signed by every attorney/agent seeking to withdraw or contain a clear indication that one attorney is signing on behalf of another/others. A request to withdraw will not be approved unless at least 30 (thirty) days would remain between the date of approval and the later of the expiration date of a time to file a response or the expiration date of the maximum time period which can be extended under 37 C.F.R. § 1.136(a).

The request was signed by Suneel Arora on behalf of all attorneys of record. All attorneys/agents have been withdrawn.

The correspondence address of record has been changed and the new correspondence address is the address indicated below.

There is no outstanding Office action at this time.

Telephone inquiries concerning this decision should be directed to Terri Williams at 571-272-2991.

T. Williams

Terri Williams
Petitions Examiner
Office of Petitions

cc: **Harness, Dickey & Pierce, P.L.C.**
P.O. Box 828
Bloomfield Hills, MI 48303

UNITED STATES PATENT AND TRADEMARK OFFICE

Commissioner for Patents
United States Patent and Trademark Office
P.O. Box 1450
Alexandria, VA 22313-1450
www.uspto.gov

CAPITAL LEGAL GROUP, LLC
5323 POOKS HILL ROAD
BETHESDA, MD 20814

COPY MAILED

OCT 2 5 2006

OFFICE OF PETITIONS

ON PETITION

In re Application of	:	
Clifford A. Davidow, et. al.	:	
Application No. 10/370,086	:	
Filed: February 20, 2003	:	
Attorney Docket No. PowerWAN-005	:	

This is a decision on the petition under 37 CFR 1.137(b), filed on July 28, 2006, to revive the above-identified application.

The application became abandoned for failure to timely respond to the Notice of Allowance and Fee(s) Due mailed on May 27, 2005. A Notice of Abandonment was mailed on October 25, 2005.

The petition satisfies the requirements of 37 CFR 1.137(b) in that petitioner has supplied (1) the reply in the form of $700 for payment of the issue fee; (2) the petition fee of $750; and (3) an adequate statement of unintentional delay. Therefore, the petition is **GRANTED**.

This application file is being referred to the Office of Publications to be processed into a patent.

Telephone inquiries concerning this decision should be directed to the undersigned at (571) 272-3226.

Andrea Smith
Petitions Examiner
Office of Petitions

UNITED STATES PATENT AND TRADEMARK OFFICE

Commissioner for Patents
United States Patent and Trademark Office
P.O. Box 1450
Alexandria, VA 22313-1450
www.uspto.gov

COPY MAILED

NOV 05 2007

OFFICE OF PETITIONS

SCHWEGMAN, LUNDBERG & WOESSNER, P.A.
P.O. BOX 2938
MINNEAPOLIS, MN 5540

In re Application of	:	
Rudy A. Mazzocchi, et al.	:	
Application No. 10/370,090	:	DECISION ON PETITION
Filed: February 20, 2003	:	TO WITHDRAW
Attorney Docket No. 723.062US1	:	FROM RECORD
	:	

This is a decision on the Request to Withdraw as attorney or agent of record under 37 C.F.R. § 1.36(b), filed June 27, 2007

The request is **NOT APPROVED**.

A grantable request to withdraw as attorney/agent of record must be signed by every attorney/agent seeking to withdraw or contain a clear indication that one attorney is signing on behalf of another/others. A request to withdraw will not be approved unless at least 30 (thirty) days would remain between the date of approval and the later of the expiration date of a time to file a response or the expiration date of the maximum time period which can be extended under 37 C.F.R. § 1.136(a).

The request cannot be approved because the attorney was not appointed by customer number.

All future communications from the Office will continue to be directed to the above-listed address until otherwise notified by applicant.

Telephone inquiries concerning this decision should be directed to undersigned at 571-272-1642.

April M. Wise
Petitions Examiner
Office of Petitions

cc: RICHARD W. WARNER
HARNESS, DICKEY & PIERCE, plc
5445 CORPORATE DRIVE
TROY, MI 48098

UNITED STATES PATENT AND TRADEMARK OFFICE

Commissioner for Patents
United States Patent and Trademark Office
P.O. Box 1450
Alexandria, VA 22313-1450
www.uspto.gov

FINNEGAN, HENDERSON, FARABOW, GARRETT & DUNNER, LLP
901 NEW YORK AVENUE, NW
WASHINGTON, DC 20001-4413

COPY MAILED

NOV 2 4 2008

OFFICE OF PETITIONS

In re Application of	:	
Monte ZWEBEN, et al	:	
Application No. 10/370,108	:	DECISION ON PETITION
Filed: February 21, 2003	:	TO WITHDRAW
Attorney Docket No. 8319.0006	:	FROM RECORD
	:	

This is a decision on the Request to Withdraw as attorney or agent of record under 37 C.F.R. § 1.36(b), filed October 9, 2008.

The request is **NOT APPROVED.**

A grantable request to withdraw as attorney/agent of record must be signed by every attorney/agent seeking to withdraw or contain a clear indication that one attorney is signing on behalf of another/others. The Office requires the practitioner(s) requesting withdrawal to certify that he, she, or they have: (1) given reasonable notice to the client, prior to the expiration of the response period, that the practitioner(s) intends to withdraw from employment; (2) delivered to the client or a duly authorized representative of the client all papers and property (including funds) to which the client is entitled; and (3) notified the client of any responses that may be due and the time frame within which the client must respond, pursuant 37 CFR 10.40(c).

The request cannot be approved because there is no indication that the acts noted above have been performed.

The request cannot be approved because there is no clear indication that the attorney making the request is signing on behalf of the other attorneys of record.

The Office cannot approve the request at this time since the reason provided does not meet any of the conditions under the mandatory or permissive categories enumerated in 37 CFR 10.40. Section 10.40 of Title 37 of the Code of Federal Regulation states, "a practitioner shall not withdraw from employment in a proceeding before the Office without permission from the Office." More specifically, 37 CFR 10.40 states, "if paragraph (b) of this section is not applicable, a practitioner may not request permission to withdraw in matter pending before the Office unless such request or such withdrawal is" for one the permissive reasons listed in 37

CFR 10.40(c). The reason set forth in the request, Assignee transferred the prosecution, does not meet any of the conditions set forth in 37 CFR 10.40, since the Assignee has not properly intervened.

In order to request or take action in a patent matter, the assignee must establish its ownership of the patent to the satisfaction of the Director. In this regard, a Statement under 37 CFR 3.73(b) must have either: (i) documentary evidence of a chain of title from the original owner to the assignee (*e.g.,* copy of an executed assignment), and a statement affirming that the documentary evidence of the chain of title from the original owner to the assignee was or concurrently is being submitted for recordation pursuant to § 3.11; or (ii) a statement specifying where documentary evidence of a chain of title from the original owner to the assignee is recorded in the assignment records of the Office (*e.g.*, reel and frame number).

All future communications from the Office will continue to be directed to the above-listed address until otherwise notified by applicant.

Telephone inquiries concerning this decision should be directed to the undersigned at 571-272-6735.

Diane Goodwyn
Petitions Examiner
Office of Petitions

cc: KATHY MILES
ESCALATE RETAIL
9890 TOWNE CENTRE DR.,
SUITE 100
SAN DIEGO, CA 92121

UNITED STATES PATENT AND TRADEMARK OFFICE

Commissioner for Patents
United States Patent and Trademark Office
P.O. Box 1450
Alexandria, VA 22313-1450
www.uspto.gov

Paper No. 011305

FEB 15 2005

PILLSBURY WINTHROP, LLP
P.O. BOX 10500
MCLEAN, VA 22102

In re Application of:	:	
HANI S. DANIEL	:	DECISION ON REQUEST TO WITHDRAW FROM RECORD
Serial No.: 10/370,113	:	
Filed: February 21, 2003	:	
Attorney Docket No.: **082134-0300266**	:	

This is a decision on the request to withdraw as attorney of record under 37 C.F.R. § 1.36, filed November 05, 2004.

The request is **DISMISSED** as moot.

A review of the application file record reveals a proper revocation and power of attorney to the attorneys of Oblon, Spivak, McClelland, Maier & Neustadt was filed on November 23, 2004. As such, the power of attorney for the attorneys and agents requesting withdrawal has already been revoked. Accordingly, the present request is moot, and must be dismissed.

All future communications form the Office will continue to be directed to the below-listed address until otherwise notified by applicant.

Inquiries related to this decision should be directed to Jose G. Dees at (571) 272-1569.

Jose G. Dees, Special Programs Examiner
Technology Center 2800
Semiconductors, Electrical and Optical
Systems and Components

cc: OBLON SPIVK MCCLELLAND MAIER & NEUSTADT, PC
1940 DUKE STREET
ALEXANDRIA, VA 22314

PTO/SB/66 (03-09)
Approved for use through 03/31/2012. OMB 0651-0016
U.S. Patent and Trademark Office: U.S. DEPARTMENT OF COMMERCE
Under the Paperwork Reduction Act of 1995, no persons are required to respond to a collection of information unless it displays valid OMB control number.

PETITION TO ACCEPT UNINTENTIONALLY DELAYED PAYMENT OF MAINTENANCE FEE IN AN EXPIRED PATENT (37 CFR 1.378(c))

Patent Number	Issue Date (YYYY-MM-DD)	Application Number	Filing Date (YYYY-MM-DD)	Docket Number (if applicable)
6804105	2004-10-12	10370148	2003-02-18	

CAUTION: Maintenance fee (and surcharge, if any) payment must correctly identify: (1) the patent number and (2) the application number of the actual U.S. application leading to issuance of that patent to ensure the fee(s) is/are associated with the correct patent. 37 CFR 1.366(c) and (d).

SMALL ENTITY
☒ Patentee claims, or has previously claimed, small entity status. See 37 CFR 1.27.

LOSS OF ENTITLEMENT TO SMALL ENTITY STATUS
☐ Patentee is no longer entitled to small entity status. See 37 CFR 1.27(g)

NOT Small Entity		Small Entity	
Fee	Code	Fee	Code
○ 3 ½ year	(1551)	◉ 3 ½ year	(2551)
○ 7 ½ year	(1552)	○ 7 ½ year	(2552)
○ 11 ½ year	(1553)	○ 11 ½ year	(2553)

SURCHARGE
The surcharge required by 37 CFR 1.20(i)(2) (Fee Code 1558) must be paid as a condition of accepting unintentionally delayed payment of the maintenance fee.

MAINTENANCE FEE (37 CFR 1.20(e)-(g))
The appropriate maintenance fee must be submitted with this petition.

STATEMENT
THE UNDERSIGNED CERTIFIES THAT THE DELAY IN PAYMENT OF THE MAINTENANCE FEE TO THIS PATENT WAS UNINTENTIONAL

PETITIONER(S) REQUEST THAT THE DELAYED PAYMENT OF THE MAINTENANCE FEE BE ACCEPTED AND THE PATENT REINSTATED

THIS PORTION MUST BE COMPLETED BY THE SIGNATORY OR SIGNATORIES

37 CFR 1.378(d) states: "Any petition under this section must be signed by an attorney or agent registered to practice before the Patent and Trademark Office, or by the patentee, the assignee, or other party in interest."

I certify, in accordance with 37 CFR 1.4(d)(4) that I am

○ An attorney or agent registered to practice before the Patent and Trademark Office

○ A sole patentee

○ A joint patentee; I certify that I am authorized to sign this submission on behalf of all the other patentees.

○ A joint patentee; all of whom are signing this e-petition

◉ The assignee of record of the entire interest

The Assignee of record of the entire interest			
Under 37 CFR 3.71 an assignee becomes of record by filing a statement in compliance with 37 CFR 3.73(b). Signature requirements are set forth in 37 CFR 1.4(d), and the undersigned certifies that he / she is empowered to act on behalf of the assignee of the entire interest			
Signature	/Mark Goldes/	Date (YYYY-MM-DD)	2010-01-12
Name	Mark Goldes		
Enter Reel and Frame Number		Remove	
Reel Number	010318	Frame Number	0252
Click ADD for additional Reel Number and Frame Number		Add	

This collection of information is required by 37 CFR 1.378(c). The information is required to obtain or retain a benefit by the public which is to file (and by the USPTO to process) an application. Confidentiality is governed by 35 U.S.C. 122 and 37 CFR 1.11 and 1.14. This collection is estimated to take 1 hour to complete, including gathering, preparing, and submitting the completed application form to the USPTO. Time will vary depending upon the individual case. Any comments on the amount of time you require to complete this form and/ or suggestions for reducing this burden, should be sent to the Chief Information Officer, U.S. Patent and Trademark Office, U.S. Department of Commerce, P.O. Box 1450, Alexandria, VA 22313-1450. DO NOT SEND FEES OR COMPLETED FORMS TO THIS ADDRESS. **This form can only be used when in conjunction with EFS-Web. If this form is mailed to the USPTO, it may cause delays in reinstating the patent.**

Privacy Act Statement

The Privacy Act of 1974 (P.L. 93-579) requires that you be given certain information in connection with your submission of the attached form related to a patent application or patent. Accordingly, pursuant to the requirements of the Act, please be advised that: (1) the general authority for the collection of this information is 35 U.S.C. 2(b)(2); (2) furnishing of the information solicited is voluntary; and (3) the principal purpose for which the information is used by the U.S. Patent and Trademark Office is to process and/or examine your submission related to a patent application or patent. If you do not furnish the requested information, the U.S. Patent and Trademark Office may not be able to process and/or examine your submission, which may result in termination of proceedings or abandonment of the application or expiration of the patent.

The information provided by you in this form will be subject to the following routine uses:

1. The information on this form will be treated confidentially to the extent allowed under the Freedom of Information Act (5 U.S.C. 552) and the Privacy Act (5 U.S.C. 552a). Records from this system of records may be disclosed to the Department of Justice to determine whether the Freedom of Information Act requires disclosure of these records.

2. A record from this system of records may be disclosed, as a routine use, in the course of presenting evidence to a court, magistrate, or administrative tribunal, including disclosures to opposing counsel in the course of settlement negotiations.

3. A record in this system of records may be disclosed, as a routine use, to a Member of Congress submitting a request involving an individual, to whom the record pertains, when the individual has requested assistance from the Member with respect to the subject matter of the record.

4. A record in this system of records may be disclosed, as a routine use, to a contractor of the Agency having need for the information in order to perform a contract. Recipients of information shall be required to comply with the requirements of the Privacy Act of 1974, as amended, pursuant to 5 U.S.C. 552a(m).

5. A record related to an International Application filed under the Patent Cooperation Treaty in this system of records may be disclosed, as a routine use, to the International Bureau of the World Intellectual Property Organization, pursuant to the Patent Cooperation Treaty.

6. A record in this system of records may be disclosed, as a routine use, to another federal agency for purposes of National Security review (35 U.S.C. 181) and for review pursuant to the Atomic Energy Act (42 U.S.C. 218(c)).

7. A record from this system of records may be disclosed, as a routine use, to the Administrator, General Services, or his/her designee, during an inspection of records conducted by GSA as part of that agency's responsibility to recommend improvements in records management practices and programs, under authority of 44 U.S.C. 2904 and 2906. Such disclosure shall be made in accordance with the GSA regulations governing inspection of records for this purpose, and any other relevant (i.e., GSA or Commerce) directive. Such disclosure shall not be used to make determinations about individuals.

8. A record from this system of records may be disclosed, as a routine use, to the public after either publication of the application pursuant to 35 U.S.C. 122(b) or issuance of a patent pursuant to 35 U.S.C. 151. Further, a record may be disclosed, subject to the limitations of 37 CFR 1.14, as a routine use, to the public if the record was filed in an application which became abandoned or in which the proceedings were terminated and which application is referenced by either a published application, an application open to public inspections or an issued patent.

9. A record from this system of records may be disclosed, as a routine use, to a Federal, State, or local law enforcement agency, if the USPTO becomes aware of a violation or potential violation of law or regulation.

UNITED STATES PATENT AND TRADEMARK OFFICE

Commissioner for Patents
United States Patent and Trademark Office
P.O. Box 1450
Alexandria, VA 22313-1450
www.uspto.gov

In re Patent No. 6804105
Issue Date: October 12,2004
Application No. 10370148
Filed: February 18,2003
Attorney Docket No. RTS-103/CON

:DECISION GRANTING PETITION
:UNDER 37 CFR 1.378(c)

This is a decision on the electronic petition, filed January 14,2010 ,under 37 CFR 1.378(c) to accept the unintentionally delayed payment of the 3.5 year maintenance fee for the above-identified patent.

The petition is **GRANTED**.

The maintenance fee is accepted, and the above-identified patent reinstated as of January 14,2010 . This decision also constitutes notice that the fee has been accepted. An electronic copy of the petition and this decision has been created as an entry in the Image File Wrapper. Nevertheless, petitioner should print and retain an independent copy.

Telephone inquiries related to this electronic decision should be directed to the Electronic Business Center at 1-866-217-9197.

UNITED STATES PATENT AND TRADEMARK OFFICE

Commissioner for Patents
United States Patent and Trademark Office
P.O. Box 1450
Alexandria, VA 22313-1450
www.uspto.gov

BEYER WEAVER LLP
P.O. BOX 70250
OAKLAND, CA 94612-0250

COPY MAILED

MAR 0 5 2008

OFFICE OF PETITIONS

In re Application of
HISANO, Atsushi
Application No. 10/370,168
Filed: February 19, 2003
Attorney Docket No. **OMRNP051/D616US**

DECISION ON PETITION
TO WITHDRAW
FROM RECORD

This is a decision on the Request to Withdraw as attorney or agent of record under 37 C.F.R. § 1.36(b), filed February 07, 2008.

The request is **APPROVED**.

A grantable request to withdraw as attorney/agent of record must be signed by every attorney/agent seeking to withdraw or contain a clear indication that one attorney is signing on behalf of another/others. A request to withdraw will not be approved unless at least 30 (thirty) days would remain between the date of approval and the later of the expiration date of a time to file a response or the expiration date of the maximum time period which can be extended under 37 C.F.R. § 1.136(a).

The request was signed by James E. Austin on behalf of all attorneys of record who are associated with customer No. 22434.

Haruo Yawata has been withdrawn as attorney or agent of record; all other attorneys remain of record.

The correspondence address of record remains unchanged.

There is an outstanding Office action mailed November 27, 2007 that requires a reply from the applicant.

Telephone inquiries concerning this decision should be directed to the undersigned at 571-272-4231.

Michelle R. Eason
Paralegal Specialist
Office of Petitions

UNITED STATES PATENT AND TRADEMARK OFFICE

COMMISSIONER FOR PATENTS
UNITED STATES PATENT AND TRADEMARK OFFICE
P.O. BOX 1450
ALEXANDRIA, VA 22313-1450
www.uspto.gov

Paper No. 5

HENRY T. BRENDZEL
PO BOX 574
SPRINGFIELD, NJ 07081

COPY MAILED

DEC 24 2003

OFFICE OF PETITIONS

In re Application of:	:	
Agrawal et al.	:	
Application No. 10/370,187	:	DECISION REFUSING
Filed: February 19, 2003	:	STATUS UNDER
Title of Invention: DIVERSITY CODED	:	37 CFR 1.47(b)
OFDM FOR HIGH DATA-RATE	:	
COMMUNICATION	:	

This is in response to a petition under 37 CFR 1.47(b), filed October 7, 2003, to allow a person to whom an inventor has assigned or agreed in writing to assign the invention, or who otherwise shows sufficient proprietary interest in the matter justifying such action, to make application on behalf of and as agent for all inventors.

The petition is **dismissed**.

Rule 47 applicant is given TWO (2) MONTHS from the mailing date of this decision to reply, correcting the below-noted deficiencies. Any reply should be entitled "Request for Reconsideration of Petition Under 37 CFR 1.47(b)", and should only address the deficiencies noted below, except that the reply may include an oath or declaration executed by the non-signing inventor. Failure to respond will result in abandonment of the application. Any extensions of time will be governed by 37 CFR 1.136(a).

It is initially noted that no fee has been submitted with the instant petition. A petition fee of $130.00 is required before any Request for Reconsideration will be considered on the merits.

The above-identified application was filed on February 19, 2003, with an unexecuted oath or declaration. Applicant files the instant petition to allow a person to whom an inventor has assigned or agreed in writing to assign the invention, or who otherwise shows sufficient proprietary interest in the matter justifying such action, to make application on behalf of and as

agent for all inventors. No Notice to File Missing Parts of Application has been mailed.

Applicant avers that

> "[t]he Declaration was mailed to inventors Seshadri and Tarokh on June 3, 2003 to respective addresses that are believed to be correct, but to date no response has been received. The mailing addresses for inventors Agrawal and Nuguib are not known and, since it is known that they have moved from their previous known address a number of years ago, and that the US Postal Service does not forward mail beyond a number of months, the Declaration was not mailed to their last-known address." *Petition* at p.1.

It is initially noted that 37 CFR 1.47 provides for two separate and distinct circumstances to allow that application to proceed without the signature of the inventor(s). The first is where an inventor refuses to sign an application after having been presented with the application for signature, and the second is where an inventor cannot be found or reached after diligent effort. Both situations are separate and distinct and require separate and distinct steps in order to allow a person to whom an inventor has assigned or agreed in writing to assign the invention, or who otherwise shows sufficient proprietary interest in the matter justifying such action, to make application on behalf of and as agent for all inventors. In this instance, Applicant avers that the whereabouts of two of the nonsigning inventors is believed to be known, and the whereabouts of the two other inventors is not known.

Applicable Law

A grantable petition under 37 CFR 1.47(b) requires: (1) proof that the non-signing inventor cannot be reached or refuses to sign the oath or declaration after having been presented with the application papers (specification, claims and drawings); (2) an acceptable oath or declaration in compliance with 35 U.S.C. §§ 115 and 116; (3) the petition fee; (4) a statement of the last known address of the non-signing inventor(s); (5) proof of proprietary interest; and (6) proof of irreparable harm. Applicant lacks items (1), (2), and (5) as set forth above.

As to item (1), and regarding inventors Seshadri and Tarokh, whose whereabouts are believed to be known, where it is alleged that an applicant refuses to join an application, the applicant must establish that the nonsigning inventor was presented with the application for signature. The Manual of Patent Examining Procedure ("MPEP") states that

> A refusal by an inventor to sign an oath or declaration when the inventor has not been presented with the application papers does not itself suggest that the inventor is refusing to join the application unless it is clear that the inventor understands exactly what he or she is being asked to sign and refuses to accept the application papers. A copy of the application papers should be sent to the last known address of the nonsigning inventor, or, if the nonsigning inventor is represented by counsel, to the address of the nonsigning inventor's attorney.

MPEP 409.03(d).

Here, Applicant provides that ["]he Declaration was mailed to inventors Seshadri and Tarokh on June 3, 2003 to respective addresses that are believed to be correct, but to date no response has been received." *Petition* at p.1. Where, as here, a refusal to sign the oath or declaration is alleged, what is required is that the application (specification, claims and drawings), be mailed to the nonsigning inventor at his or her last known address.

Further as to item (1), if an inventor is unavailable (cannot be reached), as is alleged for inventors Agrawal and Naguib, while it is not required that the application be mailed, Applicant must establish the exercise of diligent effort in trying to find or reach the nonsigning inventor. A statement of facts should be submitted that fully describes the exact facts that are relied upon to establish that a diligent effort was made to locate the inventor. The statement of facts must be from a person with first hand knowledge of the events relied upon to establish that the inventor cannot be found or reached after diligent effort. At the very least, an Internet search, or a search of telephone directories should be undertaken of the regions where it is suspected the non-signing inventor may reside. *Copies of the results of such searches must be*

presented and referred to in any renewed petition. (Emphasis supplied). It is important that the forthcoming communication contain statements of fact as opposed to conclusions. *See*, MPEP § 409.03(d).

As to item (2), the Office notes that pursuant to Section 409.03(b)(A) of the Manuel for Patent Examining Procedure:

> Where a corporation is the 37 CFR 1.47(b) applicant, an officer (President, Vice-President, Secretary, Treasurer or Chief Executive Officer) thereof should normally sign the necessary oath or declaration. A corporation may authorize any person, including an attorney or agent registered to practice before the Patent and Trademark Office, to sign the application oath or declaration on its behalf. Where an oath or declaration is signed by a registered attorney or agent on behalf of a corporation, either proof of the attorney's or agent's authority in the form of a statement signed by an appropriate corporate officer must be submitted, or *the attorney or agent may simply state that he or she is authorized to sign on behalf of the corporation.* Where the oath or declaration is being signed on behalf of an assignee, see MPEP Section 324. An inventor may not authorize another individual to act as his or her agent to sign the application oath or declaration on his or her behalf. *Staeger v. Commissioner*, 189 USPQ 272 (D.D.C. 1976), *In re Striker*, 182 USPQ 507 (Comm'r Pat. 1973). (Emphasis supplied). Where an application is executed by one other than the inventor, the declaration required by 37 CFR 1.63 must state the full name, residence, post office address, and citizenship of the nonsigning inventor. Also, the title or position of the person signing must be stated if signing on behalf of a corporation under 37 CFR 1.47(b).

Applicant has not presented an oath or declaration for the patent application in compliance with 37 CFR 1.63 and 37 CFR 1.64. A properly executed oath or declaration is required, along with proof of the attorney's or agent's authority in the form of a statement signed by an appropriate corporate officer,

or the attorney or agent may simply state that he or is authorized to sign on behalf of the corporation.

As to item (6), Rule 47 applicant failed to provide proof of irreparable damage (see MPEP 409.03(g)). A statement by Rule 47 applicant that the filing is necessary to preserve the rights of the parties would be sufficient.

Further correspondence with respect to this matter should be addressed as follows:

By mail: Commissioner for Patents
PO Box 1450
Alexandria, VA 22313-1450

By FAX: (703) 872-9306
Attn: Office of Petitions

By hand: 2201 South Clark Place
Customer Window
Crystal Plaza Two, Lobby Room 1B03
Arlington, VA 22202

Telephone inquiries concerning this decision should be directed to the undersigned at (703) 305-0014.

Derek L. Woods
Petitions Attorney
Office of Petitions

UNITED STATES PATENT AND TRADEMARK OFFICE

Commissioner for Patents
United States Patent and Trademark Office
P.O. Box 1450
Alexandria, VA 22313-1450
www.uspto.gov

WAYNE J COLTON INC
THE MILAM BUILDING SUITE 1032
115 EAST TRAVIS STREET
SAN ANTONIO TX 78205

COPY MAILED
JUL 27 2006
OFFICE OF PETITIONS

In re Application of	:	
Jessie L. Hermes	:	
Application No. 10/370,194	:	ON PETITION
Filed: February 20, 2003	:	
Attorney Docket No.: 1130.1399	:	

This is a decision on the petition filed May 12, 2006 under 37 CFR 1.137(b),[1] to revive the above-identified application.

The petition is **GRANTED**.

This application became abandoned for failure to timely reply to the non-Final Office Action mailed August 24, 2004. A shortened statutory period of three months was set for replying to the non-Final Office Action. No extensions of time having been requested, this application became abandoned November 26, 2004. Accordingly, a Notice of Abandonment was mailed on March 17, 2005.

This matter is being referred to Technology Center 2872 for appropriate action on the amendment filed May 12, 2006.

Telephone inquiries concerning this matter should be directed to the undersigned Petitions Attorney at (571) 272-3212.

Patricia Faison-Ball
Senior Petitions Attorney
Office of Petitions

---

[1]Effective December 1, 1997, the provisions of 37 CFR 1.137(b) now provide that where the delay in reply was unintentional, a petition may be filed to revive an abandoned application or a lapsed patent pursuant to 37 CFR 1.137(b). A grantable petition filed under the provisions of 37 CFR 1.137(b) must be accompanied by:

(1) the required reply, unless previously filed. In a nonprovisional application abandoned for failure to prosecute, the required reply may be met by the filing of a continuing application. In a nonprovisional application filed on or after June 8, 1995, and abandoned for failure to prosecute, the required reply may also be met by the filing of a request for continued examination in compliance with § 1.114. In an application or patent, abandoned or lapsed for failure to pay the issue fee or any portion thereof, the required reply must be the payment of the issue fee or any outstanding balance thereof. In an application abandoned for failure to pay the publication fee, the required reply must include payment of the publication fee.

(2) the petition fee as set forth in 37 CFR 1.17(m);

(3) a statement that the entire delay in filing the required reply from the due date for the reply until the filing of a grantable petition pursuant to 37 CFR 1.137(b) was unintentional. The Commissioner may required additional information where there is a question whether the delay was unintentional; and

(4) any terminal disclaimer (and fee as set forth in 37 CFR 1.20(d)) required pursuant to 37 CFR 1.137(c)).

UNITED STATES PATENT AND TRADEMARK OFFICE

Commissioner for Patents
United States Patent and Trademark Office
P.O. Box 1450
Alexandria, VA 22313-1450
www.uspto.gov

KEVIN J. MORIARTY
PATENT DEPARTMENT
DEERE & COMPANY
ONE JOHN DEERE PLACE
MOLINE, IL 61265-8098

COPY MAILED

FEB 0 3 2006

OFFICE OF PETITIONS

In re Application of :
Richard Wubbels, et al. :
Application No. 10/370,198 :
Filed: February 20, 2003 :
Attorney Docket No. 08925C-US :

ON PETITION

This is a decision on the petition under 37 CFR 1.137(b), filed August 8, 2005, to revive the above-identified application.

The petition is **GRANTED.**

The application became abandoned as a result of petitioner's failure to file an appeal brief (and fee required by 37 CFR 41.20(b)(2)) within the time period provided in 37 CFR 41.37(a)(1). As an appeal brief (and appeal brief fee) was not filed within two (2) months of the Notice of Appeal filed May 13, 2004, and no extensions of time under the provisions of 37 CFR 1.136(a) were obtained, the appeal was dismissed and the proceedings as to the rejected claims were terminated. See 37 CFR 1.197(b). As no claim was allowed, the application became abandoned on May 13, 2004. See MPEP 1215.04.

The petition satisfies the requirements of 37 CFR 1.137(b) in that petitioner has supplied (1) the reply in the form of an Amendment and a Request for Continued Examination (RCE); (2) the petition fee of $1500; and (3) the required statement of unintentional delay have been received. Accordingly, the petition filed August 8, 2005 is accepted as having been unintentionally delayed.

Telephone inquiries concerning this decision should be directed to the undersigned at (571) 272-3229.

The application matter is being forwarded to Technology Center 3600, Art Unit 3671 for processing the Request for Continued Examination under 37 CFR 1.114 filed with the instant petition.

Retta Williams

Retta Williams
Petitions Examiner
Office of Petitions

UNITED STATES PATENT AND TRADEMARK OFFICE

Commissioner for Patents
United States Patent and Trademark Office
P.O. Box 1450
Alexandria, VA 22313-1450
www.uspto.go

MAIL

AUG 2 4 2005

DIRECTOR OFFICE
TECHNOLOGY CENTER 2600

ARTHUR J. BEHIEL
SILICON EDGE LAW GROUP
6601 KOLL CENTER PARKWAY
SUITE 245
PLEASANTON, CA 94566

In re Application of
Marian Enachescu
Application No. 10/370,206
Filed: February 18, 2003

For: METHODS FOR ANALYZING DEFECT ARTIFACTS TO PRECISELY LOCATE CORRESPONDING DEFECTS

DECISION ON REQUEST TO WITHDRAW FROM RECORD

This is a decision on the request for withdrawal as agent of record filed on March 21, 2005.
A grantable request to withdraw as attorney/agent of record must:
(1) indicate the present mailing address of the attorney(s)/agent(s) who seek(s) to withdraw, and
(2) be signed by each attorney/agent seeking to withdraw or clearly be signed on their behalf, and
(3) be *approved* at least thirty (30) days prior to the maximum extendable period for response to any outstanding Office Action, and
(4) indicate the address to which future correspondence should be mailed.

Petitioner has met all of the above. Accordingly, the request is **GRANTED**.

Attorneys/agents associated in Customer No. 27,946 to withdraw are withdrawn.

All future communications from the Office will be directed to the address listed below until otherwise notified by applicant. Applicant is reminded of the obligation to promptly notify the Patent and Trademark Office of any change in correspondence address to ensure receipt of all communications from the Office.

Kenneth A Wieder
Special Program Examiner
Technology Center 2600
Communications
(571) 272-2986

Cc: MARENA SYSTEMS CORPORATION
ATTN: MARIUS ENACHESCU
3563 INVESTMENT BOULEVARD, #6
HAYWARD, CA 94545

UNITED STATES PATENT AND TRADEMARK OFFICE

Commissioner for Patents
United States Patent and Trademark Office
P.O. Box 1450
Alexandria, VA 22313-1450
www.uspto.gov

COPY MAILED

DEC 0 9 2009

OFFICE OF PETITIONS

W.C. GRAY MONTGOMERY
1627 CAMELLIA STREET
VIDALIA LA 71373

In re Patent No. 6,930,406	:	
Issue Date: August 16, 2005	:	
Application No. 10/370,223	:	ON PETITION
Filed: February 19, 2003	:	
Attorney Docket No. 9845.001	:	

This is a decision on the petition under 37 CFR 1.378(c), filed October 13, 2009, to accept the unintentionally delayed payment of a maintenance fee for the above-identified patent.

The petition is **GRANTED**.

This patent expired on August 17, 2009 for failure to pay the three and one-half year maintenance fee. Since this petition was submitted within twenty-four months after the six-month grace period provided in 37 CFR 1.362(e), the petition was timely filed under the provisions of 37 CFR 1.378(c).

The maintenance fee is hereby accepted and the above-identified patent is reinstated as of the mail date of this decision.

Telephone inquiries concerning this decision should be directed to Terri Johnson at (571) 272-2991.

The patent file is being forwarded to Files Repository.

Terri Johnson
Terri Johnson
Petitions Examiner
Office of Petitions

OIPE
OCT 13 2009
PATENT & TRADEMARK OFFICE

2009 OCT 16 PM 4:10

M 4

PTO/SB/66 (03-09)
Approved for use through 03/31/2012. OMB 0651-0016
U.S. Patent and Trademark Office; U.S. DEPARTMENT OF COMMERCE
Under the Paperwork Reduction Act of 1995, no persons are required to respond to a collection of information unless it displays a valid OMB control number

PETITION TO ACCEPT UNINTENTIONALLY DELAYED PAYMENT OF MAINTENANCE FEE IN AN EXPIRED PATENT (37 CFR 1.378 (c))

Docket Number (Optional)

RECEIVED
OCT 21 2009
OFFICE OF PETITIONS

Mail to: Mail Stop Petition
Commissioner for Patents
P.O. Box 1450
Alexandria, VA 22313-1450
Fax: (571) 273-8300

NOTE: If information or assistance is needed in completing this form, please contact Petitions Information at (571) 272-3282.

Patent No. 6930406 Application Number 10370223

Issue Date 8/16/05 Filing Date 2/19/03

CAUTION: Maintenance fee (and surcharge, if any) payment must correctly identify: (1) the patent number (or reissue patent number, if a reissue) and (2) the application number of the actual U.S. application (or reissue application) leading to issuance of that patent to ensure the fee(s) is/are associated with the correct patent. 37 CFR 1.366(c) and (d).

Also complete the following information, if applicable

The above – identified patent

☐ Is a reissue of original Patent No. _____ original issue date _____

original application number _____

original filing date _____

10/19/2009 DALLEN 00000019 6930406
01 FC:1599 2130.00 OP

☐ resulted from the entry into the U.S. under 35 U.S.C. 371 of international application _____

filed on _____

12/09/2009 CKHLOK 00000005 6930406
01 FC:2551 490.00 OP
05 FC:1558 1640.00 OP

CERTIFICATE OF MAILING (37 CFR 1.89(a))

I hereby certify that this paper (*along with any paper referred to as being attached or enclosed) is being deposited with the United States Postal Service on the date shown below with sufficient postage as first class main in an envelope addressed to Mail Stop Petition, Commissioner for Patents, P.O. Box 1450, Alexandria, VA 22313-1450, or facsimile transmitted to the U.S. Patent and Trademark Office on the date shown below.

Oct. 9, 2009
Date

W. C. Gray Montgomery
Signature

W. C. GRAY MONTGOMERY
Typed or Printed Name of Person Signing Certificate

This collection of information is required by 37 CFR 1.378(c). The information is required to obtain or retain a benefit by the public which is to file (and by the USPTO to process) an application. Confidentiality is governed by 35 U.S.C. 122 and 37 CFR 1.11 and 1.14. This collection is estimated to take 1 hour to complete, including gathering, preparing, and submitting the completed application form to the USPTO. Time will vary depending upon the individual case. Any comments on the amount of time you require to complete this form and/or suggestions for reducing this burden, should be sent to the Chief Information Officer, U.S. Patent and Trademark Office, U.S. Department of Commerce, P.O. Box 1450, Alexandria, Virginia 22313-1450. DO NOT SEND FEES OR COMPLETED FORMS TO THIS ADDRESS. **SEND TO: Mail Stop Petition, Commissioner for Patents, P.O. Box 1450, Alexandria, Virginia 22313-1450**

If you need assistance in completing the form, call 1-800-PTO-9199 and select option 2.

Adjustment date: 12/09/2009 CKHLOK
10/19/2009 DALLEN 00000019 6930406
01 FC:1599 -2130.00 OP

Under the Paperwork Reduction Act of 1995, no persons are required to respond to a collection of information unless it displays a valid OMB control number

1. SMALL ENTITY

[Y] Patentee claims, or has previously claimed, small entity status. See 37 CFR 1.27.

RECEIVED
OCT 2 1 2009
OFFICE OF PETITIONS

2. LOSS OF ENTITLEMENT TO SMALL ENTITY STATUS

[ ] Patentee is no longer entitled to small entity status. See 37 CFR 1.27(g)

3. MAINTENANCE FEE (37 CFR 1.20(e)-(g))

The appropriate maintenance fee must be submitted with this petition, unless it was paid earlier.

NOT Small Entity			Small Entity		
Amount	Fee	(Code)	Amount	Fee	(Code)
[ ] $ _____	3 ½ yr fee	(1551)	[Y] $ 490	3 ½ yr fee	(2551)
[ ] $ _____	7 ½ yr fee	(1552)	[ ] $ _____	7 ½ yr fee	(2552)
[ ] $ _____	11 ½ yr fee	(1553)	[ ] $ _____	11 ½ yr fee	(2553)

MAINTENANCE FEE BEING SUBMITTED $ 490

4. SURCHARGE

The surcharge required by 37 CFR 1.20(i)(2) of $ 1640 (Fee Code 1558) must be paid as a condition of accepting unintentionally delayed payment of a maintenance fee.

SURCHARGE FEE BEING SUBMITTED $ 1640

5. MANNER OF PAYMENT

[ ] Enclosed is a check for the sum of $ #2130.00

[ ] Please charge Deposit Account No. _____ the sum of $ _____

[ ] Payment by credit card. Form PTO-2038 is attached.

6. AUTHORIZATION TO CHARGE ANY FEE DEFICIENCY

[ ] The Director is hereby authorized to charge any maintenance fee, surcharge or petition deficiency to Deposit Account No. _____

RECEIVED
OCT 21 2009
OFFICE OF PETITIONS

7. OVERPAYMENT

As to any overpayment made please

☐ Credit to Deposit Account No. _____.

OR

☐ Send refund check

WARNING:

Petitioner/applicant is cautioned to avoid submitting personal information in documents filed in a patent application that may contribute to identity theft. Personal information such as social security numbers, bank account numbers, or credit card numbers (other than a check or credit card authorization form PTO-2038 submitted for payment purposes) is never required by the USPTO to support a petition or an application. If this type of personal information is included in documents submitted to the USPTO, petitioners/applicants should consider redacting such personal information from the documents before submitting them to the USPTO. Petitioner/applicant is advised that the record of a patent application is available to the public after publication of the application (unless a non-publication request in compliance with 37 CFR 1.213(a) is made in the application or issuance of a patent. Furthermore, the record from an abandoned application may also be available to the public if the application is referenced in a published application or an issued patent (see 37 CFR 1.14). Checks and credit card authorization forms PTO-2038 submitted for payment purposes are not retained in the application file and therefore are not publicly available.

8. STATEMENT

The delay in payment of the maintenance fee to this patent was unintentional.

✓ 9. PETITIONER(S) REQUEST THAT THE DELAYED PAYMENT OF THE MAINTENANCE FEE BE ACCEPTED AND THE PATENT REINSTATED

W.C. Gray Montgomery
Signature(s) of Petitioner(s)

Oct. 9, 2009
Date

W.C. GRAY MONTGOMERY
Typed or printed name(s)

Registration Number, if applicable

318 336 4588
Telephone Number

1627 Camellia St.
Address

Vidalia, LA. 71373
Address

37 CFR 1.378(d) states: "Any petition under this section must be signed by an attorney or agent registered to practice before the Patent and Trademark Office, or by the patentee, the assignee, or other party in interest."

ENCLOSURES

☑ Maintenance Fee Payment

☑ Surcharge under 37 CFR 1.20(i)(2) (fee for filing the maintenance fee petition)

☐ _____

UNITED STATES PATENT AND TRADEMARK OFFICE

Commissioner for Patents
United States Patent and Trademark Office
P.O. Box 1450
Alexandria, VA 22313-1450
www.uspto.gov

MARK D. MCSWAIN
IBM ALMADEN RESEARCH CENTER, IP LAW DEPT.
650 HARRY ROAD
C4TA - J2 814
SAN JOSE, CA 95120

COPY MAILED

MAR 0 6 2007

OFFICE OF PETITIONS

In re Application of Masaki Aono, et al. Application No. 10/370,224 Filed: February 19, 2003 Attorney Docket No. JP9-2002-0007	: : : : :	ON PETITION

This is a decision on the petition under 37 CFR 1.137(b) to revive the above-identified application, filed August 28, 2006.

The petition is **GRANTED**.

The application became abandoned for failure to pay the issue fee on or before July 5, 2006. A Notice of Abandonment was mailed on August 8, 2006. In response, on August 28, 2006, the present petition was filed.

The petition satisfies the requirements of 37 CFR 1.137(b) in that petitioner has supplied (1) the reply in the form of the requisite issue/publication fee; (2) the petition fee of $1,500; and (3) an adequate statement of unintentional delay.

While receipt is acknowledged of the issue fee on August 28, 2006, there is no indication that petitioner has submitted an Issue Fee Transmittal Form (PTOL-85b). If petitioner desires to have the information normally found on the PTOL-85b printed on the patent, then the enclosed form should be completed and returned to Publishing Division within ONE MONTH from the mail date of this decision.

The application is being referred to the Office of Publications to be processed into a patent.

Telephone inquires related to this decision should be directed to the undersigned at (571) 272-3204. Telephone inquiries related to processing at Publishing Division should be directed to (571) 272-4200.

Sherry D. Brinkley
Petitions Examiner
Office of Petitions

Enclosure

PART B - FEE(S) TRANSMITTAL

Complete and send this form, together with applicable fee(s), to: Mail **Mail Stop ISSUE FEE**
Commissioner for Patents
P.O. Box 1450
Alexandria, Virginia 22313-1450
or Fax (571)-273-2885

INSTRUCTIONS: This form should be used for transmitting the ISSUE FEE and PUBLICATION FEE (if required). Blocks 1 through 5 should be completed where appropriate. All further correspondence including the Patent, advance orders and notification of maintenance fees will be mailed to the current correspondence address as indicated unless corrected below or directed otherwise in Block 1, by (a) specifying a new correspondence address; and/or (b) indicating a separate "FEE ADDRESS" for maintenance fee notifications.

CURRENT CORRESPONDENCE ADDRESS (Note: Use Block 1 for any change of address)

033360 7590 04/04/2006

MARK D. MCSWAIN
IBM ALMADEN RESEARCH CENTER, IP LAW DEPT.
650 HARRY ROAD
CHTA/J2B
SAN JOSE, CA 95120

Note: A certificate of mailing can only be used for domestic mailings of the Fee(s) Transmittal. This certificate cannot be used for any other accompanying papers. Each additional paper, such as an assignment or formal drawing, must have its own certificate of mailing or transmission.

Certificate of Mailing or Transmission
I hereby certify that this Fee(s) Transmittal is being deposited with the United States Postal Service with sufficient postage for first class mail in an envelope addressed to the Mail Stop ISSUE FEE address above, or being facsimile transmitted to the USPTO (571) 273-2885, on the date indicated below.

(Depositor's name)
(Signature)
(Date)

APPLICATION NO.	FILING DATE	FIRST NAMED INVENTOR	ATTORNEY DOCKET NO.	CONFIRMATION NO.
10/370,224	02/19/2003	Masaki Aono	JP9-2002-0007	6285

TITLE OF INVENTION: INFORMATION PROCESSING USING A HIERARCHY STRUCTURE OF RANDOMIZED SAMPLES

APPLN. TYPE	SMALL ENTITY	ISSUE FEE	PUBLICATION FEE	TOTAL FEE(S) DUE	DATE DUE
nonprovisional	NO	$1400	$300	$1700	07/05/2006

EXAMINER	ART UNIT	CLASS-SUBCLASS
AHLUWALIA, NAVNEET K	2166	707-100000

1. Change of correspondence address or indication of "Fee Address" (37 CFR 1.363).
- ☐ Change of correspondence address (or Change of Correspondence Address form PTO/SB/122) attached.
- ☐ "Fee Address" indication (or "Fee Address" Indication form PTO/SB/47; Rev 03-02 or more recent) attached. Use of a Customer Number is required.

2. For printing on the patent front page, list
(1) the names of up to 3 registered patent attorneys or agents OR, alternatively,
(2) the name of a single firm (having as a member a registered attorney or agent) and the names of up to 2 registered patent attorneys or agents. If no name is listed, no name will be printed.
1 _____
2 _____
3 _____

3. ASSIGNEE NAME AND RESIDENCE DATA TO BE PRINTED ON THE PATENT (print or type)

PLEASE NOTE: Unless an assignee is identified below, no assignee data will appear on the patent. If an assignee is identified below, the document has been filed for recordation as set forth in 37 CFR 3.11. Completion of this form is NOT a substitute for filing an assignment.

(A) NAME OF ASSIGNEE (B) RESIDENCE: (CITY and STATE OR COUNTRY)

Please check the appropriate assignee category or categories (will not be printed on the patent) : ☐ Individual ☐ Corporation or other private group entity ☐ Government

4a. The following fee(s) are enclosed:
- ☐ Issue Fee
- ☐ Publication Fee (No small entity discount permitted)
- ☐ Advance Order - # of Copies _____

4b. Payment of Fee(s):
- ☐ A check in the amount of the fee(s) is enclosed.
- ☐ Payment by credit card. Form PTO-2038 is attached.
- ☐ The Director is hereby authorized by charge the required fee(s), or credit any overpayment, to Deposit Account Number _____ (enclose an extra copy of this form).

5. Change in Entity Status (from status indicated above)
- ☐ a. Applicant claims SMALL ENTITY status. See 37 CFR 1.27.
- ☐ b. Applicant is no longer claiming SMALL ENTITY status. See 37 CFR 1.27(g)(2).

The Director of the USPTO is requested to apply the Issue Fee and Publication Fee (if any) or to re-apply any previously paid issue fee to the application identified above.
NOTE: The Issue Fee and Publication Fee (if required) will not be accepted from anyone other than the applicant; a registered attorney or agent; or the assignee or other party in interest as shown by the records of the United States Patent and Trademark Office.

Authorized Signature _____ Date _____

Typed or printed name _____ Registration No. _____

This collection of information is required by 37 CFR 1.311. The information is required to obtain or retain a benefit by the public which is to file (and by the USPTO to process) an application. Confidentiality is governed by 35 U.S.C. 122 and 37 CFR 1.14. This collection is estimated to take 12 minutes to complete, including gathering, preparing, and submitting the completed application form to the USPTO. Time will vary depending upon the individual case. Any comments on the amount of time you require to complete this form and/or suggestions for reducing this burden, should be sent to the Chief Information Officer, U.S. Patent and Trademark Office, U.S. Department of Commerce, P.O. Box 1450, Alexandria, Virginia 22313-1450. DO NOT SEND FEES OR COMPLETED FORMS TO THIS ADDRESS. SEND TO: Commissioner for Patents, P.O. Box 1450, Alexandria, Virginia 22313-1450.
Under the Paperwork Reduction Act of 1995, no persons are required to respond to a collection of information unless it displays a valid OMB control number.

UNITED STATES PATENT AND TRADEMARK OFFICE

Commissioner for Patents
United States Patent and Trademark Office
P.O. Box 1450
Alexandria, VA 22313-1450
www.uspto.gov

Felix J. Sahlin
1480 Mississippi River Boulevard S.
St. Paul MN 55116-1853

COPY MAILED

FEB 0 2 2006

OFFICE OF PETITIONS

In re Application of :
Yefim Amnuel :
Application No. 10/370,242 :
Filed: February 17, 2003 :
Title: Apparel As A Means To Display Divided Team Loyalties :

ON PETITION

This is a decision on the petition under 37 CFR 1.181 to withdraw the holding of abandonment, filed September 3, 2005 and December 13, 2005.

The petition to withdraw the holding of abandonment is **GRANTED**.

This application was held abandoned February 6, 2005 for failure to timely reply to the Notice of Non-Compliant Amendment (37 CFR 1.121) mailed on January 5, 2005. The Notice set a one (1) month extendable time period for reply. A Notice of Abandonment was mailed August 23, 2005.

Petitioner asserts that a reply to the Notice of Non-Compliant Amendment was timely submitted on January 17, 2005. As evidence, petitioner has submitted a copy of the reply which contains a certificate of transmission pursuant to 37 CFR 1.8.

The response submitted January 17, 2005 has not been located in the Office, however, in view of the evidence submitted, the response is deemed timely.

The Notice of Abandonment is hereby vacated and the holding of abandonment is withdrawn.

The application file is being forwarded to the Technology Center 3700 for further processing.

Telephone inquiries concerning this matter should be directed to the undersigned at (571) 272-3215.

Charlema R. Grant
Petitions Attorney
Office of Petitions

UNITED STATES PATENT AND TRADEMARK OFFICE

Commissioner for Patents
United States Patent and Trademark Office
P.O. Box 1450
Alexandria, VA 22313-1450
www.uspto.gov

MARK D. PASSLER
AKERMAN SENTERFITT
P.O. BOX 3188
WEST PALM BEACH FL 33402-3188

COPY MAILED
JUN 0 4 2004
OFFICE OF PETITIONS

In re Application of :
Melvin R. Kennedy, et al. :
Application No. 10/370,262 :
Filed: February 19, 2003 :
Attorney Docket No. 6865-20 :

ON PETITION

This is a decision on the petition, filed May 17, 2004, under 37 CFR 1.313(c)(2) to withdraw the above-identified application from issue after payment of the issue fee.

The petition is **GRANTED**.

The above-identified application is withdrawn from issue for consideration of a submission under 37 CFR 1.114 (request for continued examination). See 37 CFR 1.313(c)(2).

Petitioner is advised that the issue fee paid on April 19, 2004, in the above-identified application cannot be refunded. If, however, the above-identified application is again allowed, petitioner may request that it be applied towards the issue fee required by the new Notice of Allowance. [1]

Telephone inquiries relating to this decision should be directed to the undersigned at (703) 305-9220.

The application is being referred to Technology Center AU 3732 for further processing of the request for continued examination under 37 CFR 1.114.

Sherry D. Brinkley
Petitions Examiner
Office of Petitions
Office of the Deputy Commissioner
for Patent Examination Policy

[1]The request to apply the issue fee to the new Notice may be satisfied by completing and returning the new Issue Fee Transmittal Form PTOL-85(b), which includes the following language thereon: "Commissioner for Patents is requested to apply the Issue Fee and Publication Fee (if any) or re-apply any previously paid issue fee to the application identified above." Petitioner is advised that, whether a fee is indicated as being due or not, the Issue Fee Transmittal Form **must** be completed and timely submitted to avoid abandonment. Note the language in bold text on the first page of the Notice of Allowance and Fee(s) Due (PTOL-85).

UNITED STATES PATENT AND TRADEMARK OFFICE

Commissioner for Patents
United States Patent and Trademark Office
P.O. Box 1450
Alexandria, VA 22313-1450
www.uspto.gov

Paper No.

Date : June 4, 2004

TO : Director, Office of Patent Publication

FROM : Office of the Deputy Commissioner for Patent Examination Policy

SUBJECT : Withdrawal from Issue of

Applicant(s) : Melvin R. Kennedy, et al.
Application No. : 10/370,262
Filed : February 19, 2003

The above-identified application has been assigned Patent No. 6,745,780 and an issue date of June 8, 2004.

It is hereby directed that this application be withdrawn from issue at the request of the applicant.

Do not refund the issue fee.

The following erratum should be published in the Official Gazette if the above-identified application is published in the OG of June 8, 2004:

> "All reference to Patent No. 6,745,780 to MELVIN R. KENNEDY, ET AL. of FLORIDA HAIR COLORING DEVICE AND METHODS appearing in the Official Gazette of June 8, 2004, should be deleted since no patent was granted."

Sherry D. Brinkley
Petitions Examiner
Office of Petitions
Office of the Deputy Commissioner
for Patent Examination Policy

cc: Geraldine Dozier, Crystal Park 3-44I (FAX-306-2737)
Deneise Boyd, Crystal Park 2, Suite II00 (FAX-308-5413)
Mary Louise McAskill, Crystal Park 3-910 (FAX 305-4372)
Niomi Farmer, Crystal Park 3-9I0 (FAX-305-4372)
Mary E. Johnson (Cookie), P/OCS, CM1-6D07
Duane K.Davis, P/OCS, CM1-6A07
Tamara K. Greene, PK3-910

UNITED STATES PATENT AND TRADEMARK OFFICE

Commissioner for Patents
United States Patent and Trademark Office
P.O. Box 1450
Alexandria, VA 22313-1450
www.uspto.gov
DIW Mar-06

ERNEST D. BUFF
ERNEST D. BUFF AND ASSOCIATES, LLC.
231 SOMERVILLE ROAD
BEDMINSTER NJ 07921

COPY MAILED

MAR 07 2006

OFFICE OF PETITIONS

In re Application of	:	
Todd R. Hewitt	:	
Application No. 10/370,263	:	DECISION ON PETITION
Filed: 21 February, 2003	:	
Atty Docket No. 0115-1	:	

This is a decision on the petition filed on 14 September, 2005, under 37 CFR 1.137(b),[1] to revive the above-identified application.

The petition is **GRANTED**.

The application became abandoned on 30 March, 2005, for failure to timely submit the issue and publication fees in response to the Notice of Allowance and Fee(s) Due mailed on 29 December, 2004, which set a three (3) month statutory period for reply. Notice of Abandonment was mailed on 2 May, 2005.

---

[1] Effective December 1, 1997, the provisions of 37 CFR 1.137(b) now provide that where the delay in reply was unintentional, a petition may be filed to revive an abandoned application or a lapsed patent pursuant to 37 CFR 1.137(b). A grantable petition filed under the provisions of 37 CFR 1.137(b) must be accompanied by:

(1) the required reply, unless previously filed. In a nonprovisional application abandoned for failure to prosecute, the required reply may be met by the filing of a continuing application. In a nonprovisional utility or plant application filed on or after June 8, 1995, and abandoned for failure to prosecute, the required reply may also be met by the filing of a request for continuing examination in compliance with § 1.114. In an application or patent, abandoned or lapsed for failure to pay the issue fee or any portion thereof, the required reply must be the payment of the issue fee or any outstanding balance thereof. In an application abandoned for failure to pay the publication fee, the required reply must include payment of the publication fee.

(2) the petition fee as set forth in 37 CFR 1.17(m);

(3) a statement that the entire delay in filing the required reply from the due date for the reply until the filing of a grantable petition pursuant to 37 CFR 1.137(b) was unintentional. The Commissioner may required additional information where there is a question whether the delay was unintentional; and

(4) any terminal disclaimer (and fee as set forth in 37 CFR 1.20(d)) required pursuant to 37 CFR 1.137(c)).

The statement contained in the instant petition does not set forth that the entire delay from the due date of the required reply to the date of the filing of a grantable petition was unintentional as required by 37 CFR 1.137(b)(3). However, the statement contained in the instant petition is being so construed. Petitioner **must** notify the Office if this is not a correct interpretation.

This application is being referred to Publishing Division for processing into a patent.

Telephone inquiries concerning this matter may be directed to the undersigned at (571)272-3231.

D Wood

Douglas I. Wood
Senior Petitions Attorney
Office of Petitions

UNITED STATES PATENT AND TRADEMARK OFFICE

UNITED STATES DEPARTMENT OF COMMERCE
United States Patent and Trademark Office
Address: COMMISSIONER FOR PATENTS
P.O. Box 1450
Alexandria, Virginia 22313-1450
www.uspto.gov

GAUTHIER & CONNORS, LLP
225 FRANKLIN STREET
SUITE 2300
BOSTON, MA 02110

Mail Date: 04/21/2010

Applicant	: Jacob Barak	: DECISION ON REQUEST FOR
Patent Number	: 7591796	: RECALCULATION of PATENT
Issue Date	: 09/22/2009	: TERM ADJUSTMENT IN VIEW
Appliction No	: 10/370,283	: OF WYETH AND NOTICE OF INTENT TO
Filed	: 02/20/2003	: ISSUE CERTIFICATE OF CORRECTION
		:

The Request for Recalculation is **GRANTED** to the extent indicated.

The patent term adjustment has been determined to be **1940** days. The USPTO will *sua sponte* issue a certificate of correction reflecting the amount of PTA days determined by the recalculation.

Prior to the issuance of the certificate of correction, the USPTO will afford patentee an opportunity to be heard and request reconsideration. Accordingly, patentee has **one month or thirty (30) days**, whichever is longer, to file a request for reconsideration of this patent term adjustment calculation. See 35 U.S.C. 154(b)(3)(B)(ii) and 37 CFR 1.322(a)(4). No extensions of time will be granted under 37 CFR 1.136.

Patentee should use document code PET.OP if electronically filing a request for reconsideration of this patent term adjustment calculation. The patentee must also include the information required by 37 CFR 1.705(b)(2) and the fee required by 37 CFR 1.18(e). If patentee does not file a timely request for reconsideration of this patent term adjustment calculation including the information required by 37 CFR 1.705(b)(2) and the fee required by 37 CFR 1.18(e), the USPTO will issue a certificate of correction reflecting the PTA determination noted above.

Patentee should be aware that in order to preserve the right to review in the United States District Court for the District of Columbia of the USPTO patent term adjustment determination, patentee must ensure that he or she also take the steps required under 35 U.S.C. 154(b)(4)(A) in a timely manner. Nothing in the request for recalculation should be construed as providing an alternative time frame for commencing a civil action under 35 U.S.C. 154(b)(4)(A).

Any questions concerning this decision should be directed to the Office of Patent Legal Administration at 571-272-7702.

UNITED STATES PATENT AND TRADEMARK OFFICE

Commissioner for Patents
United States Patent and Trademark Office
P.O. Box 1450
Alexandria, VA 22313-1450
www.uspto.gov

SALIWANCHIK LLOYD & SALIWANCHIK
A PROFESSIONAL ASSOCIATION
PO BOX 142950
GAINESVILLE FL 32614-2950

COPY MAILED

DEC 11 2007

OFFICE OF PETITIONS

In re Application of	:
Martin et al.	: LETTER REGARDING
Application No. 10/370,291	: PATENT TERM ADJUSTMENT
Filed: February 19, 2003	:
Attorney Docket No. GJE-30D1	:

This letter is in response to the "COMMUNICATION REGARDING CORRECTION OF PATENT TERM ADJUSTMENT," filed September 27, 2007. Pursuant to applicants' duty of good faith and candor to the Office, applicants request that the initial Determination of Patent Term Adjustment under 35 U.S.C. 154(b) be reviewed for accuracy. Applicants state that the patent term adjustment for the above-identified patent should be set at two hundred twenty-two (222) days instead of two hundred twenty-five (225) days.

The request for review of the initial Determination of Patent Term Adjustment is **granted**.

The Office has updated the PAIR screen to reflect that the correct Patent Term Adjustment (PTA) determination at the time of the mailing of the Notice of Allowance is **two hundred twenty-two (222) days**. A copy of the updated PAIR screen, showing the correct determination, is enclosed.

On June 28, 2007, the Office mailed the Determination of Patent Term Adjustment under 35 U.S.C. 154(b) in the above-identified application. The Notice stated that the patent term adjustment to date is two hundred twenty-five (225) days. On September 27, 2007, applicants submitted the instant comment.

Applicants state that the Office mailed a Notice to File Missing Parts of Nonprovisional Application on May 1, 2003. Applicants assert that they filed their response on August 4, 2003, in excess of the three-month period from the mailing date of the Notice to File Missing Parts. See 37 CFR 1.704(b).

A review of the application history confirms that applicants failed to engage in reasonable efforts to conclude processing of this application. Pursuant to 37 CFR 1.704(b), the period of adjustment should have been reduced by three (3) days, the number of days in the period beginning on the day after the date that is three months after the date of mailing of the Notice to File Missing Parts, August 2, 2003, and ending on the date the reply was filed, August 4, 2003.

In view thereof, the patent term adjustment at the time of the mailing of the Notice of Allowance is **two hundred twenty-two days** (421 days of PTO delay - 199 days of applicant delay = 222 days).

As this letter was submitted as an advisement to the Office of an error in applicants' favor, the Office will not assess the $200.00 fee as set forth in 37 CFR 1.18(e). The Office thanks applicants for their good faith and candor in bringing this to the attention of the Office.

Applicants are reminded that if an application is entitled to an adjustment under 35 U.S.C. 154(b)(1)(B), the entire period during which the application was pending (except for periods excluded under 35 U.S.C. 154(b)(1)(B)(i)-(iii)), and not just the period beginning three years after the actual filing date of the application, is the period of delay under 35 U.S.C. 154(b)(1)(B) in determining whether periods of delay overlap under 35 U.S.C. 154(b)(2)(A). Thus, any days of delay for Office issuance of the patent more than 3 years after the filing date of the application which overlap with the days of patent term adjustment accorded prior to the issuance of the patent will not result in any additional patent term adjustment. See 35 U.S.C. 154(b)(1)(B), 35 U.S.C. 154(b)(2)(A), and 37 CFR 1.703(f).

The Office of Patent Publication has been advised of this decision. The application is being referred to the Office of Patent Publication for issuance of the patent.

Telephone inquiries specific to this matter should be directed to Christina Tartera Donnell, Senior Petitions Attorney, at (571) 272-3211.

Nancy Johnson
Senior Petitions Attorney
Office of Petitions

Enclosure: Copy of updated PAIR screen

Day : Monday
Date: 12/10/2007

PALM INTRANET

Time: 20:01:11

PTA Calculations for Application: 10/370291			
Application Filing Date:	02/19/2003	PTO Delay (PTO):	421
Issue Date of Patent:		Three Years:	0
Pre-Issue Petitions:	0	Applicant Delay (APPL):	196
Post-Issue Petitions:	0	Total PTA (days):	222
PTO Delay Adjustment:	-3		

File Contents History

Number	Date	Contents Description	PTO	APPL	START
64	12/10/2007	ADJUSTMENT OF PTA CALCULATION BY PTO		3	
56	06/28/2007	MAIL NOTICE OF ALLOWANCE			
55	06/28/2007	MAIL EXAMINER'S AMENDMENT			
54	06/26/2007	ISSUE REVISION COMPLETED			
53	06/26/2007	NOTICE OF ALLOWANCE DATA VERIFICATION COMPLETED			
52	06/26/2007	CASE DOCKETED TO EXAMINER IN GAU			
51	06/25/2007	ALLOWED CASE RETURNED TO THE EXAMINER FOR CLERICAL PROCESSING			
50	06/25/2007	DOCUMENT VERIFICATION			
49	06/21/2007	EXAMINER'S AMENDMENT COMMUNICATION			
48	06/21/2007	NOTICE OF ALLOWABILITY			
47	06/04/2007	DATE FORWARDED TO EXAMINER			
46	05/16/2007	RESPONSE AFTER NON-FINAL ACTION		91	44
45	05/16/2007	REQUEST FOR EXTENSION OF TIME - GRANTED			
44	11/14/2006	MAIL NON-FINAL REJECTION			
43	11/13/2006	NON-FINAL REJECTION			
42	09/12/2006	DATE FORWARDED TO EXAMINER			
41	08/29/2006	RESPONSE AFTER NON-FINAL ACTION		67	38
40	08/29/2006	REQUEST FOR EXTENSION OF TIME - GRANTED			
38	03/23/2006	MAIL NON-FINAL REJECTION			
37	03/20/2006	NON-FINAL REJECTION			
36	01/16/2006	DATE FORWARDED TO EXAMINER			
35	01/03/2006	RESPONSE AFTER NON-FINAL ACTION		38	33
34	01/03/2006	REQUEST FOR EXTENSION OF TIME - GRANTED			

33	08/26/2005	MAIL NON-FINAL REJECTION			
32	08/22/2005	NON-FINAL REJECTION			
31	02/14/2005	INFORMATION DISCLOSURE STATEMENT CONSIDERED			
30	08/29/2003	INFORMATION DISCLOSURE STATEMENT CONSIDERED			
29	08/01/2005	DATE FORWARDED TO EXAMINER			
28	07/15/2005	RESPONSE TO ELECTION / RESTRICTION FILED			
27	06/14/2005	MAIL RESTRICTION REQUIREMENT	421		-1
26	06/13/2005	REQUIREMENT FOR RESTRICTION / ELECTION			
25.7	02/14/2005	INFORMATION DISCLOSURE STATEMENT (IDS) FILED			
25	02/14/2005	INFORMATION DISCLOSURE STATEMENT (IDS) FILED			
24	04/13/2004	REFERENCE CAPTURE ON IDS			
23	04/07/2004	IFW TSS PROCESSING BY TECH CENTER COMPLETE			
22.7	08/29/2003	INFORMATION DISCLOSURE STATEMENT (IDS) FILED			
22	08/29/2003	INFORMATION DISCLOSURE STATEMENT (IDS) FILED			
21	08/21/2003	PRELIMINARY AMENDMENT			
20	02/19/2003	PRELIMINARY AMENDMENT			
19	04/07/2004	CASE DOCKETED TO EXAMINER IN GAU			
18	08/21/2003	PRELIMINARY AMENDMENT			
17	02/19/2003	REQUEST FOR FOREIGN PRIORITY (PRIORITY PAPERS MAY BE INCLUDED)			
16	02/19/2003	PRELIMINARY AMENDMENT			
15	08/25/2003	APPLICATION DISPATCHED FROM OIPE			
14	08/26/2003	APPLICATION IS NOW COMPLETE			
13	08/01/2003	PAYMENT OF ADDITIONAL FILING FEE/PREEXAM			
12	02/19/2003	CLAIM PRELIMINARY AMENDMENT			
11	08/01/2003	PAYMENT OF ADDITIONAL FILING FEE/PREEXAM			
10	02/19/2003	CLAIM PRELIMINARY AMENDMENT			
8	08/01/2003	PAYMENT OF ADDITIONAL FILING FEE/PREEXAM			
7	05/01/2003	NOTICE MAILED--APPLICATION INCOMPLETE--			

		FILING DATE ASSIGNED			
5	04/13/2003	IFW SCAN & PACR AUTO SECURITY REVIEW			
4	03/13/2003	IFW SCAN & PACR AUTO SECURITY REVIEW			
3	03/05/2003	CRF IS GOOD TECHNICALLY / ENTERED INTO DATABASE			
2	02/19/2003	CRF DISK HAS BEEN RECEIVED BY PREEXAM / GROUP / PCT			
1	02/19/2003	INITIAL EXAM TEAM NN			

Search Another: Application# Search

EXPLANATION OF PTA CALCULATION

EXPLANATION OF PTE CALCULATION

To go back use Back button on your browser toolbar.

Back to PALM | ASSIGNMENT | OASIS | Home page

UNITED STATES PATENT AND TRADEMARK OFFICE

Commissioner for Patents
United States Patent and Trademark Office
P.O. Box 1450
Alexandria, VA 22313-1450
www.uspto.gov

COPY MAILED
JUL 13 2006
OFFICE OF PETITIONS

TOWNSEND AND TOWNSEND AND CREW, LLP
TWO EMBARCADERO CENTER
EIGHTH FLOOR
SAN FRANCISCO, CA 94111-3834

In re Application of	:	
Zequn Mei et al	:	
Application No. 10/370,294	:	DECISION ON PETITION
Filed: February 18, 2003	:	TO WITHDRAW
Attorney Docket No. 020139-001100US	:	FROM RECORD
	:	

This is a decision on the Request to Withdraw as attorney or agent of record under 37 C.F.R. § 1.36(b), filed February 27, 2006.

The request is **APPROVED**.

A grantable request to withdraw as attorney/agent of record must be signed by every attorney/agent seeking to withdraw or contain a clear indication that one attorney is signing on behalf of another/others. A request to withdraw will not be approved unless at least 30 (thirty) days would remain between the date of approval and the later of the expiration date of a time to file a response or the expiration date of the maximum time period which can be extended under 37 C.F.R. § 1.136(a).

The request was signed by David N. Slone on behalf of all attorneys of record who are associated with Customer No. 20350.

Applicant is reminded that there is no attorney of record at this time.

The request to change the correspondence of record is not acceptable as the requested correspondence address is not that of: (1) the first named signing inventor; or (2) an intervening assignee of the entire interest under 37 C.F.R. 3.71. All future communications from the Office will be directed to the first named signing inventor or the assignee of the entire interest at the first copied address below until otherwise properly notified by the applicant.

There is an outstanding Office action mailed February 13, 2006 that requires a reply from the applicant.

Telephone inquiries concerning this decision should be directed to Irvin Dingle at (571) 272-3210.

David Buccic
Petitions Examiner
Office of Petitions

cc: Zequn Mei
48888 Crown Ridge Common
Fremont, CA 94539

cc: Pete Michaelson
Michaelson & Associates
328 Newman Springs Road
PO Box 8489
Red Bank, NJ 07701

UNITED STATES PATENT AND TRADEMARK OFFICE

Commissioner for Patents
United States Patent and Trademark Office
P.O. Box 1450
Alexandria, VA 22313-1450
www.uspto.gov

McGLEW AND TUTTLE
John James McGlew
Scarborough Station
Scarborough, NY 10510-0827

COPY MAILED

JUL 1 3 2004

OFFICE OF PETITIONS

In re Patent of
Tobita et al.
Patent No. 6,761,842
Issue Date: July 13, 2004
Application No. 10/370,301
Filing Date: February 18, 2003
Attorney Docket No. 70858

Letter

This is a notice regarding your request for acceptance of a fee deficiency submission under 37 CFR 1.28(c), filed June 23, 2004.

The deficiency payment of $665 is hereby accepted

The change of status to large entity has been entered and made of record.

The file is being forwarded to Files Repository.

Telephone inquiries should be directed to Petitions Attorney Steven Brantley at (703) 306-5683.

Charles Steven Brantley
Senior Petitions Attorney
Office of Petitions

UNITED STATES PATENT AND TRADEMARK OFFICE

Commissioner for Patents
United States Patent and Trademark Office
P.O. Box 1450
Alexandria, VA 22313-1450
www.uspto.gov

JJGJr: 06-06

Paper No: __

NIKOLAI & MERSEREAU, P.A.
900 SECOND AVENUE SOUTH
SUITE 820
MINNEAPOLIS MN 55402

COPY MAILED

JUN 27 2006

OFFICE OF PETITIONS

In re Patent No. 6,811,500	:	
Issue Date: 2 November, 2004	:	
Application No. 10/370,319	:	ON PETITION
Filed: 13 February, 2003	:	
Attorney Docket No.: PUSA030109	:	

This is a decision on the petition filed on 23 March and supplemented on 12 May, 2006, requesting issuance of duplicate Letters Patent for the above-identified patent/application under 37 C.F.R. §1.182.[1]

The petition is **GRANTED.**

The Publishing Division is directed to issue duplicate Letters Patent.

A copy of this decision is being forwarded to Publishing Division for issuance of duplicate Letters Patent.

The file is being released to the Files Repository.

---

[1] The regulations at 37 C.F.R. §1.182 provide:
§ 1.182 Questions not specifically provided for.
All situations not specifically provided for in the regulations of this part will be decided in accordance with the merits of each situation by or under the authority of the Commissioner, subject to such other requirements as may be imposed, and such decision will be communicated to the interested parties in writing. Any petition seeking a decision under this section must be accompanied by the petition fee set forth in § 1.17(h). [47 Fed. Reg. 41278, Sept. 17, 1982, effective date Oct. 1, 1982; revised, 62 Fed. Reg. 53131, Oct. 10, 1997, effective Dec. 1, 1997]

Any questions regarding the issuance of the duplicate Letters Patent should be directed to Ms. Krystal Paige, OPPD, South Tower 8C32, Phone (703) 308-9250, ext 139; FAX (571) 270-9937.

Telephone inquiries concerning this decision may be directed to the undersigned at (571) 272-3214.

John J. Gillon, Jr.
Senior Attorney
Office of Petitions

cc: Ms. Krystal Paige, ST/8C32 FAX: (571) 270-9937

UNITED STATES PATENT AND TRADEMARK OFFICE

Commissioner for Patents
United States Patent and Trademark Office
P.O. Box 1450
Alexandria, VA 22313-1450
www.uspto.gov

SCHNECK & SCHNECK
P.O. BOX 2-E
SAN JOSE, CA 95109-0005

COPY MAILED

MAY 2 2 2006

OFFICE OF PETITIONS

In re Application of	:	
Mellen-Thomas Benedict	:	DECISION ON REQUEST
Application No. 10/370,330	:	TO WITHDRAW FROM
Filed: February 18, 2003	:	RECORD
Attorney Docket No. MTB-003	:	

This is a decision on the Request to Withdraw as attorney or agent of record under 37 CFR § 1.36(b), filed on October 17, 2005.

The request is **NOT APPROVED** as moot.

A review of the file record indicates that the power of attorney to all the attorneys or agents of record have been revoked by the assignee of the patent application. Accordingly, the request to withdraw under 37 CFR § 1.36(b) is moot.

The correspondence address of record has been changed and the new correspondence address is the address indicated below.

There is an Office action mailed January 12, 2006 that requires a reply from the applicant.

Telephone inquires concerning this decision should be directed to Andrea Smith at (571) 272-3226.

Andrea Smith
Petitions Examiner
Office of Petitions

Conferee:

cc: MARC E. HANKIN, ESQ.
11414 THURSTON CIRCLE
LOS ANGELES, CA 90049

UNITED STATES PATENT AND TRADEMARK OFFICE

Commissioner for Patents
United States Patent and Trademark Office
P.O. Box 1450
Alexandria, VA 22313-1450
www.uspto.gov

HEWLETT-PACKARD COMPANY
Intellectual Property Administration
P.O. Box 272400
Fort Collins CO 80527-2400

COPY MAILED

JUL 0 6 2007

OFFICE OF PETITIONS

In re Application of :
Bunn et al. :
Application No. 10/370,340 :
Filed: 02-20-2003 :
Attorney Docket No. 100202816-1 :

DECISION ON PETITION

This is a decision on the petition filed May 5, 2007, to withdraw the holding of abandonment for the above-identified application.

On September 7, 2006, the Office mailed a nonfinal Office Action, which set a three-month shortened statutory period for reply. In the absence of a timely filed response, the application was held abandoned on December 8, 2006. A Notice of Abandonment was mailed on March 20, 2007.

In the present petition, the practitioner requested that the Office withdraw the holding of abandonment due to non-receipt of the nonfinal Office Action.

PETITION TO WITHDRAW THE HOLDING OF ABANDONMENT

A review of the record indicates no irregularity in the mailing of the nonfinal Office Action, and in the absence of any irregularity in the mailing, there is a strong presumption that the nonfinal Office Action was properly mailed to the address of record. This presumption may be overcome by a showing that the nonfinal Office action was not in fact received. The showing required to establish non-receipt of an Office communication must include a statement from the practitioner, stating that the practitioner did not receive the Office communication and attesting to the fact that a search of the file jacket and docket records indicates that the Office communication was not received. A copy of the docket record where the non-received Office communication would have been entered had it been received and docketed must be attached to and referenced in practitioner's statement. See MPEP 711.03(c)(I)(A). For example, if a three-month period for reply was set in the non-received Office communication, a copy of the docket report showing all replies docketed for a date three months from the mail date of the non-received Office communication must be submitted as documentary proof of non-receipt of the Office communication. The showing outlined above may not be sufficient if there are circumstances

that point to a conclusion that the Office communication may have been lost after receipt rather than a conclusion that the Office communication was lost in the mail (*e.g.* if the practitioner has a history of not receiving Office communications).

After reviewing the documents submitted on petition, the Office concludes that the showing of record is sufficient to warrant withdrawal of the holding of abandonment. The practitioner for applicants submitted copies of docket records where the nonfinal Office Action would have been entered had it been received and docketed. The practitioner attested to the fact that a search of the file jacket and docket records indicated that the nonfinal Office Action was not received. Accordingly, applicants presented the required showing under 37 CFR 1.181.

The petition under 37 CFR 1.181 is **GRANTED**. No petition fee is required.

Technology Center Art Unit 2157 has been advised of this decision. The matter is being referred to the Technology Center's technical support staff for mailing of a new nonfinal Office action. The three (3) month shortened statutory time period for responding to the nonfinal Office action will be set to run from the mailing date of the new nonfinal Office action.

Telephone inquiries related to this decision may be directed to the undersigned at (571) 272-3211.

Christina Tartera Donnell

Christina Tartera Donnell
Senior Petitions Attorney
Office of Petitions

UNITED STATES PATENT AND TRADEMARK OFFICE

Commissioner for Patents
United States Patent and Trademark Office
P.O. Box 1450
Alexandria, VA 22313-1450
www.uspto.gov

IRELL & MANELLA LLP
1800 AVENUE OF THE STARS
SUITE 900
LOS ANGELES, CA 90067

COPY MAILED

AUG 2 2 2005

OFFICE OF PETITIONS

In re Application of	:	
Edward Van Halen	:	
Application No. 10/370,351	:	DECISION GRANTING PETITION
Filed: February 18, 2003	:	UNDER 37 CFR 1.313(c)(2)
Attorney Docket No. 157435-0004	:	

This is a decision on the petition, filed August 19, 2005, under 37 CFR 1.313(c)(2) to withdraw the above-identified application from issue after payment of the issue fee.

The petition is **GRANTED**.

The above-identified application is withdrawn from issue for consideration of a submission under 37 CFR 1.114 (request for continued examination). See 37 CFR 1.313(c)(2).

Petitioner is advised that the issue fee paid on July 14, 2005 in the above-identified application cannot be refunded. If, however, the above-identified application is again allowed, petitioner may request that it be applied towards the issue fee required by the new Notice of Allowance.[1]

Telephone inquiries should be directed to the undersigned at (571) 272-3218.

This matter is being referred to Technology Center AU 2837 for processing of the request for continued examination under 37 CFR 1.114 and for consideration of the Information Disclosure Statement.

Frances Hicks
Petitions Examiner
Office of Petitions

---

[1] *The request to apply the issue fee to the new Notice may be satisfied by completing and returning the new Issue Fee Transmittal Form PTOL-85(b), which includes the following language thereon: "Commissioner for Patents is requested to apply the Issue Fee and Publication Fee (if any) or re-apply any previously paid issue fee to the application identified above." Petitioner is advised that, whether a fee is indicated as being due or not, the Issue Fee Transmittal Form* ***must*** *be completed and timely submitted to avoid abandonment. Note the language in bold text on the first page of the Notice of Allowance and Fee(s) Due (PTOL-85).*

UNITED STATES PATENT AND TRADEMARK OFFICE

COMMISSIONER FOR PATENTS
UNITED STATES PATENT AND TRADEMARK OFFICE
P.O. BOX 1450
ALEXANDRIA, VA 22313-1450
WWW.USPTO.GOV

Paper No. 5

COPY MAILED

JUN 1 2 2003

OFFICE OF PETITIONS

David J. Alexander
Fina Technology, Inc.
P.O. Box 674412
Houston TX 77267-4412

In re Application of
Gray, Coffy, Shamshoum & Chen
Application No. 10/370,365
Filed: February 18, 2003
Attorney Docket No.: COS 730
For: POLYOLEFIN CATALYSTS, PRODUCTION THEREOF AND METHOD OF USE

DECISION REFUSING STATUS UNDER 37 CFR 1.47(a)

This is a decision on the petition under 37 CFR 1.47(a), filed May 7, 2003.

The petition is **DISMISSED**.

Any request for reconsideration of this decision must be submitted within TWO (2) MONTHS from the mail date of this decision. Extensions of time under 37 CFR 1.136(a) are permitted. Any response should be entitled "Request for Reconsideration of Petition Under 37 CFR 1.47(a)" and may include an oath or declaration executed by the inventor. **Failure to respond will result in abandonment of the application.**

The above-identified application was filed on February 18, 2003 without an executed oath or declaration. Accordingly, on April 16, 2003, a "Notice to File Missing Parts of Nonprovisional Application" was mailed, requiring an executed oath or declaration and a surcharge for its late filing.

In response, on May 7, 2003, a declaration executed by 3 of 4 joint inventors, the surcharge, the petition fee, and the instant petition were filed. The petition is accompanied by a statement of facts by Linda Nightingale, Senior Legal Secretary of Fina Technology, Inc., the former employer of Mr. Shamshoum. Ms. Nightingale states that non-signing joint inventor Edwar S. Shamshoum received a copy of the application, a declaration, and an assignment for the above-identified application, but did not respond to the request that he sign the declaration for the patent application.

A grantable petition under 37 CFR 1.47(a) requires

(1) a petition including proof of the pertinent facts establishing that the joint inventor(s) refuses to join, or cannot be found or reached after diligent effort,
(2) a proper oath or Declaration executed by the available joint inventor(s),
(3) the fee of $130 as specified in 37 CFR § 1.17(h), and
(4) the last known address of the omitted inventor(s).

This petition lacks item (2) above.

As to item (2), an oath or declaration for the patent application in compliance with 37 CFR 1.63 and 1.64 still has not been presented. The declaration contains noninitialed, nondated alterations to Steven D. Gray's information. 37 CFR 1.52(c) states that "[a]ny interlineation, erasure,

cancellation or other alteration of the application papers filed should be made on or before the signing of the accompanying oath or declaration pursuant to 1.63...." This includes the oath or declaration. The Office will not consider whether noninitialed and or nondated alterations were made before or after signing of the oath or declaration but will require a new oath or declaration. See MPEP 605.04(a). An oath or declaration in compliance with 37 CFR 1.63 and 1.64 signed by the Rule 1.47 applicants on behalf of Mr. Shamshoum is REQUIRED. See MPEP 409.03(a).

Fortunately, the deficiencies or inaccuracies relate to a signing inventor. Thus, pursuant to 37 CFR 1.67(a)(2), Mr. Gray can correct his information on a supplemental declaration identifying the entire inventive entity but signed only by him.

Further correspondence with respect to this matter should be addressed as follows:

By mail: Mail Stop PETITION
Commissioner for Patents
Post Office Box 1450
Alexandria, VA 22313-1450

By facsimile: (703) 308-6916
Attn: Office of Petitions

By hand: Office of Petitions
2201 South Clark Place
Crystal Plaza 4, Suite 3C23
Arlington, VA 22202

Telephone inquiries should be directed to the undersigned at (703) 308-6712.

E. Shirene Willis

E. Shirene Willis
Senior Petitions Attorney
Office of Petitions

UNITED STATES PATENT AND TRADEMARK OFFICE

COMMISSIONER FOR PATENTS
UNITED STATES PATENT AND TRADEMARK OFFICE
P.O. BOX 1450
ALEXANDRIA, VA 22313-1450
WWW.USPTO.GOV

Paper No. 8

COPY MAILED

AUG 21 2003

OFFICE OF PETITIONS

David J. Alexander
Fina Technology, Inc.
P.O. Box 674412
Houston TX 77267-4412

In re Application of
Gray, Coffy, Shamshoum & Chen
Application No. 10/370,365
Filed: February 18, 2003
Attorney Docket No.: COS 730
For: POLYOLEFIN CATALYSTS, PRODUCTION THEREOF AND METHOD OF USE

DECISION ACCORDING STATUS UNDER 37 CFR 1.47(a)

This is a decision on the reconsideration petition under 37 CFR 1.47(a), filed August 4, 2003 (certificate of mailing date August 1, 2003).

The petition is granted.

Petitioners have shown that the non-signing inventor, Edwar S. Shamshoum, has refused to join in the filing of the above-identified application after having been presented with the application papers. Specifically, a statement of facts by Linda Nightingale, Senior Legal Secretary of Fina Technology, Inc., the former employer of Mr. Shamshoum, establishes that non-signing joint inventor received a copy of the application, a declaration, and an assignment for the above-identified application, but the inventor did not respond to the request that he sign the declaration for the patent application. Petitioners have submitted declarations in compliance with 37 CFR 1.63 and 1.64.

This application and papers have been reviewed and found in compliance with 37 CFR 1.47(a). This application is hereby accorded Rule 1.47(a) status.

As provided in Rule 1.47(c), this Office will forward notice of this application's filing to the non-signing inventor at the address given in the petition. Notice of the filing of this application will also be published in the Official Gazette.

After this decision is mailed, the above-identified application will be forwarded to Technology Center 1700 for examination in due course.

Telephone inquiries should be directed to the undersigned at (703) 308-6712.

E. Shirene Willis

E. Shirene Willis
Senior Petitions Attorney
Office of Petitions

UNITED STATES PATENT AND TRADEMARK OFFICE

COMMISSIONER FOR PATENTS
UNITED STATES PATENT AND TRADEMARK OFFICE
P.O. BOX 1450
ALEXANDRIA, VA 22313-1450
WWW.USPTO.GOV

EDWAR S SHAMSHOUM
904 BLACK OAK COURT
GIBSONIA PA 15044

COPY MAILED

AUG 21 2003

OFFICE OF PETITIONS

In re Application of :
Gray, Coffy, Shamshoum & Chen :
Application No. 10/370,365 :
Filed: February 18, 2003 :
Attorney Docket No.: COS 730 :
For: POLYOLEFIN CATALYSTS, PRODUCTION THEREOF AND METHOD OF USE

LETTER

Dear Mr. Shamshoum:

You are named as a joint inventor in the above identified United States patent application, filed under the provisions of 35 U.S.C. 116 (United States Code), and 37 CFR 1.47(a), Rules of Practice in Patent Cases. Should a patent be granted on the application you will be designated therein as a joint inventor.

As a named inventor you are entitled to inspect any paper in the file wrapper of the application, order copies of all or any part thereof (at a prepaid cost per 37 CFR 1.19) or make your position of record in the application. Alternatively, you may arrange to do any of the preceding through a registered patent attorney or agent presenting written authorization from you. If you care to join the application, counsel of record (see below) would presumably assist you. Joining in the application would entail the filing of an appropriate oath or declaration by you pursuant to 37 CFR 1.63.

Requests for information regarding your application should be directed to the File Information Unit at (703)308-2733. Information regarding how to pay for and order a copy of the application, or a specific paper in the application, should be directed to Certification Division at (703)308-9726 or 1(800)972-6382 (outside the Washington D.C. area).

Telephone inquiries regarding this communication should be directed to the undersigned at (703) 308-6712.

E Shirene Willis

E. Shirene Willis
Senior Petitions Attorney
Office of Petitions

ATTORNEY OF RECORD: David J. Alexander
Fina Technology, Inc.
P.O. Box 674412
Houston TX 77267-4412

UNITED STATES PATENT AND TRADEMARK OFFICE

COMMISSIONER FOR PATENTS
UNITED STATES PATENT AND TRADEMARK OFFICE
P.O. BOX 1450
ALEXANDRIA, VA 22313-1450
www.USPTO.GOV

Paper No. 8

COPY MAILED

AUG 21 2003

OFFICE OF PETITIONS

David J. Alexander
Fina Technology, Inc.
P.O. Box 674412
Houston TX 77267-4412

In re Application of
Gray, Coffy, Shamshoum & Chen
Application No. 10/370,365
Filed: February 18, 2003
Attorney Docket No.: COS 730
For: POLYOLEFIN CATALYSTS, PRODUCTION THEREOF AND METHOD OF USE

DECISION ACCORDING STATUS UNDER 37 CFR 1.47(a)

This is a decision on the reconsideration petition under 37 CFR 1.47(a), filed August 4, 2003 (certificate of mailing date August 1, 2003).

The petition is granted.

Petitioners have shown that the non-signing inventor, Edwar S. Shamshoum, has refused to join in the filing of the above-identified application after having been presented with the application papers. Specifically, a statement of facts by Linda Nightingale, Senior Legal Secretary of Fina Technology, Inc., the former employer of Mr. Shamshoum, establishes that non-signing joint inventor received a copy of the application, a declaration, and an assignment for the above-identified application, but the inventor did not respond to the request that he sign the declaration for the patent application. Petitioners have submitted declarations in compliance with 37 CFR 1.63 and 1.64.

This application and papers have been reviewed and found in compliance with 37 CFR 1.47(a). This application is hereby accorded Rule 1.47(a) status.

As provided in Rule 1.47(c), this Office will forward notice of this application's filing to the non-signing inventor at the address given in the petition. Notice of the filing of this application will also be published in the Official Gazette.

After this decision is mailed, the above-identified application will be forwarded to Technology Center 1700 for examination in due course.

Telephone inquiries should be directed to the undersigned at (703) 308-6712.

E. Shirene Willis
Senior Petitions Attorney
Office of Petitions

RECEIVED
AUG 29 2003
FTI LEGAL DEPT.

Copied from 11031587 on 05/24/2007

UNITED STATES PATENT AND TRADEMARK OFFICE

Commissioner for Patents
United States Patent and Trademark Office
P.O. Box 1450
Alexandria, VA 22313-1450
www.uspto.gov

COPY MAILED

NOV 13 2009

OFFICE OF PETITIONS

MHKKG/SUN
P.O. BOX 398
AUSTIN TX 78767

In re Application of	:	
Drew G. Doblar, et al.	:	
Application No. 10/370,386	:	DECISION ON PETITION
Filed: February 18, 2003	:	
Attorney Docket No. 5181-97600	:	

This is a decision on the petition under the unintentional provisions of 37 CFR 1.137(b), filed July 31, 2009, to revive the above-identified application.

The petition is **GRANTED**.

This application became abandoned as a result of petitioner's failure to take appropriate action in a timely manner after the decision of June 2, 2009 by the Board of Patent Appeals and Interferences. Therefore, the proceedings as to the rejected claims were terminated. See 37 CFR 1.197(b). As no claim was allowed, the application became abandoned on August 3, 2009. See MPEP 1214.06.

The petition satisfies the requirements of 37 CFR 1.137(b) in that petitioner has supplied (1) the reply in the form of a RCE and amendment, (2) the petition fee of $1,620, and (3) a proper statement of unintentional delay.

Telephone inquiries concerning this decision should be directed to Terri Johnson at (571) 272-2991.

This application is being referred to Technology Center AU 2116 for appropriate action by the Examiner in the normal course of business on the reply received

Terri Johnson

Terri Johnson
Petitions Examiner
Office of Petitions

UNITED STATES PATENT AND TRADEMARK OFFICE

Commissioner for Patents
United States Patent and Trademark Office
P.O. Box 1450
Alexandria, VA 22313-1450
www.uspto.gov

COPY MAILED
APR 24 2007
OFFICE OF PETITIONS

Edward A. Squillante, Jr.
Unilever Intellectual Property Group
700 Sylvan Avenue
Bldg C2 South
Englewood Cliffs, NJ 07632-3100

In re Application of:	:	
Robert Carson	:	DECISION ON PETITION UNDER
Application No.: 10/370,390	:	37 CFR 1.137(b)
Filed: February 19, 2003	:	
Atty's Docket No.: J6820(C)	:	

This is a decision on the petition for revival of the above-entitled application under 37 CFR 1.137(b), filed September 14, 2006.

The petition is **GRANTED**.

The above-identified application became abandoned for failure to submit the issue and publication fees in a timely manner in reply to the Notice Of Allowance mailed June 13, 2006, which set a statutory period for reply of three (3) months. Accordingly, the above-identified application became abandoned at midnight on September 13, 2006.

On September 14, 2006, applicant filed the petition for revival under 37 CFR 1.137(b) considered herein. The petition satisfies the conditions for revival pursuant to the provisions of 37 CFR 1.137(b) in that it includes: (1) the petition fee; (2) the required statement of unintentional delay; and (3) the required reply in the form of payment of the issue and publication fees. Accordingly, the issue and publication fee payments are accepted as having been unintentionally delayed.

The application is being referred to the Office Of Publications.

Telephone inquiries concerning this decision should be directed to the undersigned.

Derek A. Putonen
Attorney Advisor
(571) 272-3294

UNITED STATES PATENT AND TRADEMARK OFFICE

Commissioner for Patents
United States Patent and Trademark Office
P.O. Box 1450
Alexandria, VA 22313-1450
www.uspto.gov

RAYMOND J WERNER
2056 NW ALOCLEK DRIVE SUITE 314
HILLSBORO OR 97124

MAILED

MAY 24 2010

OFFICE OF PETITIONS

In re Patent No. 6,991,969
Issue Date: January 31, 2006 :
Application No. 10/370,393 : DECISION ON PETITION
Filed: February 19, 2003 :

This is a decision on the petition to reinstate an expired patent under 37 CFR 1.378(c), filed February 22, 2010.

The petition under 37 CFR 1.378(c) is **GRANTED**.

The above-identified patent issued January 31, 2006. Accordingly, the first maintenance fee could have been paid during the period from January 31, 2009 through July 31, 2009 without surcharge, or with a late payment surcharge during the period from August 1, 2009 through January 31, 2010. No maintenance fee having been received, the patent expired on February 1, 2010.

Since the instant petition was filed within twenty-four months after the six-month grace period provided in 37 CFR 1.362(e), the petition was timely filed under the provisions of 37 CFR 1.378(c). The maintenance fee in this case is accepted and the above-identified patent is hereby reinstated as of the mail date of this decision.

Telephone inquiries specific to this decision may be directed to the undersigned at (571)272-3207.

Cliff Congo
Petitions Attorney
Office of Petitions

UNITED STATES PATENT AND TRADEMARK OFFICE

Commissioner for Patents
United States Patent and Trademark Office
P.O. Box 1450
Alexandria, VA 22313-1450
www.uspto.gov

TIMOTHY J. KLIMA
HABIN KING & KLIMA
500 NINTH STREET SE
WASHINGTON, DC 20003

COPY MAILED

JUN 2 0 2007

OFFICE OF PETITIONS

In re Application of	:	
Ivanoe Bertuzzi et al	:	
Application No. 10/370,454	:	DECISION ON PETITION
Filed: February 24, 2003	:	
Attorney Docket No. TK396	:	

This is a decision on the petition, filed January 16, 2007, which is being treated as a petition under 37 CFR 1.181 (no fee) requesting withdrawal of the holding of abandonment in the above-identified application.

The petition is **GRANTED**.

This application was held abandoned for failure to reply to the non-final Office action mailed November 1, 2004, which set a three (3) month shortened statutory period for reply. A Notice of Abandonment was mailed on June 9, 2005.

Petitioner asserts that the Office action dated November 1, 2004 was not received.

A review of the written record indicates an irregularity in the mailing of the Office action of November 1, 2004. In this regard, the Office received a change of address on December 18, 2003, prior to the mailing of the Office action of November 1, 2004. Office records were not updated to reflect this new change of address. Accordingly, as the Office action was mailed to an incorrect address, the Notice of Abandonment mailed June 9, 2005 is hereby vacated and the holding of abandonment withdrawn.

Telephone inquires should be directed to Irvin Dingle at (571) 272-3210.

This application is being referred to the Technology Center technical support staff of Art Unit 3651 for remailing the Office action of November 1, 2004 and resetting the period for reply.

Irvin Dingle
Petition Examiner
Office of Petitions

UNITED STATES PATENT AND TRADEMARK OFFICE

Commissioner for Patents
United States Patent and Trademark Office
P.O. Box 1450
Alexandria, VA 22313-1450
www.uspto.gov

NIXON & VANDERHYE, PC
901 NORTH GLEBE ROAD
11TH FLOOR
ARLINGTON, VA 22203

MAILED

APR 19 2006

TECHNOLOGY CENTER 2100

In re Application of: TOHKI, et al.
Application No. 10/370,465
Filed: 24 February 2003
For: NETWORK COMMUNICATION DEVICE

DECISION ON PETITION
TO MAKE SPECIAL
(ACCELERATED EXAMINATION)
UNDER M.P.E.P. §708.02 (VIII)

This is a decision on the petition filed 31 January 2006, under 37 C.F.R. 102(d) and M.P.E.P. § 708.02(VIII): Accelerated Examination, to make the above-identified application special.

The Petition is **DISMISSED**.

M.P.E.P. § 708.02, Section VIII which sets out the prerequisites for a grantable petition for Accelerated Examination under 37 C.F.R. § 102(d) states in relevant part:

A new application (one which has not received any examination by the examiner) may be granted special status provided that applicant (and this term includes applicant's attorney or agent) complies with each of the following items:

(a) Submits a petition to make special accompanied by the fee set forth in 37 CFR 1.17(h);

(b) Presents all claims directed to a single invention, or if the Office determines that all the claims presented are not obviously directed to a single invention, will make an election without traverse as a prerequisite to the grant of special status;

(c) Submits a statement(s) that a pre-examination search was made, listing the field of search by class and subclass, publication, Chemical Abstracts, foreign patents, etc. The pre-examination search must be directed to the invention as claimed in the application for which special status is requested. A search made by a foreign patent office satisfies this requirement;

(d) Submits one copy each of the references deemed most closely related to the subject matter encompassed by the claims if said references are not already of record; and

(e) Submits a detailed discussion of the references, which discussion points out, with the particularity required by 37 CFR 1.111 (b) and (c), how the claimed subject matter is patentable over the references.

In this case, the petition fails to adequately meet the requirement (e) as set forth supra. Responsive to requirement (e), applicant must provide a "detailed discussion of the references, which discussion points out, with the particularity required by 37 CFR 1.111 (b) and (c), how the claimed subject matter is patentable over the references." Petitioner should ensure that the above discussion is directed to *how the language of each of the independent claims are specifically distinguishable and patentable from the references* provided pursuant to requirement (d) supra.

The petition filed 31 January 2006 fails to discuss the **claimed limitations** with respect to the references in accordance with the requirements of 37 CFR 1.111 (b) and (c). The petition does not specifically recite language or limitations from the independent claims to properly compare/contrast the claimed invention (each of the independent claims) with respect to the prior art in the identified references. Petitioner is required to submit a **detailed discussion that includes identifying claim limitations with particularity for each independent-claim** that shows how the claimed invention distinguishes over the relevant teachings of each reference.

Applicant's petition fails to provide a "detailed discussion of the references" with the requisite particularity that illuminates the salient prior art issues relative to the claimed subject matter. Petitioner's cursory treatment of the references does not detail, with the particularity called for under section (e), the relevancy of the prior art pedagogy in order to sufficiently set forth a case distinguishing the limitations claimed to be patentable in relation to the given reference.

In the discussion of the references, Petitioner is required to point out (substantively detail) the prior art elements and associations germane to the claims to fully flesh-out the comparison between the referenced prior art and Applicant's claimed features. The petition must specifically show, for each independent-claim, specific language that distinguishes over each given reference in order to specify "how the claimed subject matter is patentable over the references." For example, in the instant application, independent claims 15, 19 and 28 recite "a ***message*** disposition ***notification*** is required" whereas the petition incorrectly indicates that the claims recite "a disposition ***confirmation response*** is required".

Petition to Make Special **DISMISSED**.

Petitioner is given one opportunity to perfect the petition. Any request for reconsideration must be filed within TWO MONTHS of the mail date of this decision.

Until the renewed petition is submitted, the application will be returned to the examiner's docket to await treatment on the merits in the normal order of examination.

Brian L. Johnson
Special Program Examiner
Technology Center 2100
Computer Architecture, Software and Information Security
571-272-3595

GO

UNITED STATES PATENT AND TRADEMARK OFFICE

Commissioner for Patents
United States Patent and Trademark Office
P.O. Box 1450
Alexandria, VA 22313-1450
www.uspto.gov

NIXON & VANDERHYE, PC
901 NORTH GLEBE ROAD
11TH FLOOR
ARLINGTON, VA 22203

MAILED
SEP 18 2006
TECHNOLOGY CENTER 2100

In re Application of: Tohki, et al.
Application No. 10/370,465
Filed: February 24, 2003
For: NETWORK COMMUNICATION DEVICE

DECISION ON PETITION
TO MAKE SPECIAL
(ACCELERATED EXAMINATION)
UNDER M.P.E.P. §708.02 (VIII)

This is a decision on the Request for Reconsideration filed June 15, 2006 on the petition to make special under 37 C.F.R. §102(d) and M.P.E.P. §708.02(VIII): Accelerated Examination, originally filed on January 31, 2006 and dismissed on April 19, 2006.

The Petition is **GRANTED**.

M.P.E.P. §708.02, Section VIII which sets out the prerequisites for a grantable petition for Accelerated Examination under 37 C.F.R. §1.102(d) states in relevant part:

A new application (one which has not received any examination by the examiner) may be granted special status provided that applicant (and this term includes applicant's attorney or agent) complies with each of the following items:

(a) Submits a petition to make special accompanied by the fee set forth in 37 CFR 1.17(h);

(b) Presents all claims directed to a single invention, or if the Office determines that all the claims presented are not obviously directed to a single invention, will make an election without traverse as a prerequisite to the grant of special status;

(c) Submits a statement(s) that a pre-examination search was made, listing the field of search by class and subclass, publication, Chemical Abstracts, foreign patents, etc. The pre-examination search must be directed to the invention as claimed in the application for which special status is requested. A search made by a foreign patent office satisfies this requirement;

(d) Submits one copy each of the references deemed most closely related to the subject matter encompassed by the claims if said references are not already of record; and

(e) Submits a detailed discussion of the references, which discussion points out, with the particularity required by 37 CFR 1.111 (b) and (c), how the claimed subject matter is patentable over the references.

Petition to Make Special **GRANTED** since all of the requirements for special status under MPEP § 708.02(VIII) have been met.

The application file is being forwarded to the Examiner for accelerated examination in accordance with M.P.E.P. §708.02, Section VIII. If the application is subsequently allowed, it will be given priority for printing. See M.P.E.P. §1309.

Brian L. Johnson
Special Program Examiner
Technology Center 2100
Computer Architecture, Software and Information Security
571-272-3595

Pet. Dec.

UNITED STATES PATENT AND TRADEMARK OFFICE

Commissioner for Patents
United States Patent and Trademark Office
P.O. Box 1450
Alexandria, VA 22313-1450
www.uspto.gov

Mailed: 2/14/05

spg
Paper Number _____

In re application of	:	
Virginie Harle et al.	:	DECISION ON
Serial No. 10/370,471	:	PETITION
Filed: February 23, 2003	:	
For: PROCESS FOR CONVERSION OF HYDROCARBONS ON A	:	
CATALYST WITH CONTROLLED ACIDITY	:	

This is a response to the PETITION UNDER 37 CFR § 1.181 REQUESTING WITHDRAWAL OF NOTICE OF ABANDONMENT FOR FAILURE TO RECEIVE AN OFFICE ACTION, filed April 29, 2004. The petition requests that the abandonment, as set forth in the Notice of Abandonment mailed April 26, 2004, be withdrawn since the applicant did not receive the Notice of Allowance and Fee(s) Due mailed December 4, 2003.

DECISION

The instant request is accepted as a timely petition under 37 C.F.R. 1.181 (no fee), and is evaluated under the procedures regarding an acceptable showing of non-receipt of an office action, TMOG 1156 O.G. 53, November 16, 1993, (see also MPEP 711.03(c) - NEW PROCEDURE TMOG 1170 O.G. 114). A review of the petitioner's evidence indicates that the request has merit. The evidence presented is sufficient to establish that the applicant or any authorized representative of the applicant did not receive the Notice of Allowance and Fee(s) Due, mailed December 4, 2003. The evidence provided includes a statement by the petitioner that the Notice of Allowance and Fee(s) Due, mailed December 4, 2003 was not received, a statement that a search of the file and docket records was made, and a statement that the search revealed the Notice of Allowance and Fee(s) Due was not received. Also provided is a copy of the attorney's application docket records where the Notice of Allowance and Fee(s) Due would have been posted had it been timely received.

Therefore, the abandonment is hereby withdrawn, and the application is returned to pending status. The application shall be forwarded to the examiner for prompt remailing of the Notice of Allowance and Fee(s) Due originally mailed December 4, 2003 and restarting of the period of response from the remail date thereof.

The Petition is **GRANTED**.

Jacqueline Stone, Director
Technology Center 1700
Chemical and Materials Engineering

MILLEN, WHITE, ZELANO & BRANIGAN, P.C.
2200 CLARENDON BLVD.
SUITE 1400
ARLINGTON VA 22201

UNITED STATES PATENT AND TRADEMARK OFFICE

COMMISSIONER FOR PATENTS
UNITED STATES PATENT AND TRADEMARK OFFICE
P.O. BOX 1450
ALEXANDRIA, VA 22313-1450
www.uspto.gov

Paper No. 8

DR. MARK FRIEDMAN LTD.
c/o Bill Polkinghorn
Discovery Dispatch
9003 Florin Way
Upper Marlboro MD 20772

COPY MAILED

OCT 1 0 2003

OFFICE OF PETITIONS

In re Application of
Karin, Shtein, Retter, Ziv-Av & Golan
Application No. 10/370,472
Filed: February 24, 2003
Attorney Docket No. 1494/20
For: SCANNING MECHANISM FOR
HIGH-SPEED HIGH-RESOLUTION SCANNING

: DECISION ACCORDING STATUS
: UNDER 37 CFR 1.47(a)

This is in response to the petition under 37 CFR 1.47(a), filed September 2, 2003.

The petition is granted.

Petitioners have shown that the non-signing inventor, Amnon Shtein, has refused to join in the filing of the above-identified application after having been presented with the application papers. Specifically, the declaration of joint inventor Jacob Karin establishes that the inventor was handed the application papers and declaration, but expressly refused to sign the declaration on June 3, 2003 during a conversation with Mr. Karin. It is presumed that the last known address for Mr. Shtein is that which is set forth in the Combined Declaration for Patent Application and Power of Attorney. Petitioners have submitted a declaration in compliance with 37 CFR 1.63 and 1.64.

This application and papers have been reviewed and found in compliance with 37 CFR 1.47(a). This application is hereby accorded Rule 1.47(a) status.

As provided in Rule 1.47(c), this Office will forward notice of this application's filing to the non-signing inventor at the address given in the petition. Notice of the filing of this application will also be published in the Official Gazette.

After this decision is mailed, the above-identified application will be forwarded to Technology Center 2800 for examination in due course.

Telephone inquiries should be directed to the undersigned at (703) 308-6712.

E. Shirene Willis

E. Shirene Willis
Senior Petitions Attorney
Office of Petitions

UNITED STATES PATENT AND TRADEMARK OFFICE

Commissioner for Patents
United States Patent and Trademark Office
P.O. Box 1450
Alexandria, VA 22313-1450
www.uspto.gov

COPY MAILED

OCT 0 8 2009

OFFICE OF PETITIONS

FOLEY AND LARDNER LLP
SUITE 500
3000 K STREET NW
WASHINGTON, DC 20007

In re Application of	:	
Ajayan, et al.	:	
Application No. 10/370,519	:	ON APPLICATION FOR
Filed: February 24, 2003	:	PATENT TERM ADJUSTMENT
Atty Docket No. 047182-0108	:	

This is in response to the "REQUEST FOR RECONSIDERATION PATENT TERM ADJUSTMENT UNDER 37 C.F.R. § 1.705" filed August 5, 2009. Applicants submits that the patent term adjustment to be indicated on the patent is one thousand five hundred sixty-three (1,563) days, not one thousand three hundred and twelve (1,312) days as calculated by the Office as of the mailing of the initial determination of patent term adjustment. Applicants request this correction solely on the basis that the Office will take in excess of three years to issue this patent.

As the instant application for patent term adjustment requests reconsideration of the patent term adjustment as it relates to the Office's failure to issue the patent within 3 years of the filing date, the application for patent term adjustment under 37 CFR 1.705(b) is **DISMISSED as PREMATURE**.

Knowledge of the actual date the patent issues is required to calculate the amount, if any, of additional patent term patentee is entitled to for Office failure to issue the patent within 3 years. See § 1.702(b). (This is true even where a request for continued examination (RCE) was filed). The computer will not undertake the § 1.702(b) calculation until the actual date of issuance of the patent has been determined. Likewise, the computer will not calculate any further Office delay under § 1.702(a)(4) or applicant delay under § 1.704(c)(10) until the actual date of issuance of the patent has been determined. As such, the Office can not make a determination on the correctness of the patent term adjustment until the patent has issued.

Requesting reconsideration of the patent term adjustment to be indicated on the patent under 37 CFR 1.705(b) based on the initial determination of patent term adjustment and a projected issuance date of the patent (or even the filing date of the request for continued examination) is premature. Accordingly, it is appropriate to dismiss as premature such a request.

Rather than file an application for patent term adjustment under 37 CFR 1.705(b) contesting the 37 CFR 1.702(b) calculation at the time of the mailing of the notice of allowance, applicant is advised that they may wait until the time of the issuance of the patent and file a request for reconsideration of the patent term adjustment pursuant to 37 CFR 1.705(d). As the USPTO does not calculate the amount of time earned pursuant to 37 CFR 1.702(b) until the time of the issuance of the patent, the Office will consider any request for reconsideration of the patent term adjustment due to an error in the calculation of 37 CFR 1.702(b) to be timely if the request for reconsideration is filed within two months of the issuance of the patent. However, as to all other bases for contesting the initial determination of patent term adjustment received with the notice of allowance, applicant must timely file an application for patent term adjustment prior to the payment of the issue fee[1].

It is noted that any period of adjustment will be entered in light of 35 U.S.C. 154(B) GUARANTEE OF NO MORE THAN 3-YEAR APPLICATION PENDENCY, which provides that:

> Subject to the limitations under paragraph (2), if the issue of an original patent is delayed due to the failure of the United States Patent and Trademark Office to issue a patent within 3 years after the actual filing date of the application in the United States, not including —

---

[1] For example, if applicant disputes both the calculation of patent term adjustment under 37 CFR 1.702(a)(1) for Office failure to mail a first Office action or notice of allowance not later than fourteen months after the date on which the application was filed and under 37 CFR 1.702(b) for Office failure to issue a patent within three years of the actual filing date of the application, then applicant must still timely file an application for patent term adjustment prior to the payment of the issue fee to contest the calculation of Office delay in issuing a first Office action or notice of allowance. See 37 CFR 1.705(b) and 35 U.S.C. 154(b)(3)(B). A dispute as to the calculation of the §1.702(a)(1) period raised on request for reconsideration of patent term adjustment under 37 CFR 1.705(d) will be dismissed as untimely filed.

(i) any time consumed by continued examination of the application requested by the applicant under section 132(b);

It is further noted that a Request for Continued Examination (RCE) was filed in this application on November 2, 2006.

The Office acknowledges submission of the $200.00 fee set forth in 37 CFR 1.18(e) for consideration of the application for patent term adjustment under 37 CFR 1.705(b).

Any request for reconsideration of the patent term adjustment indicated on the patent must be timely filed within 2 months after issuance pursuant to 37 CFR 1.705(d) and must include payment of the required fee under 37 CFR 1.18(e).

The Office of Data Management has been advised of this decision. This application is being referred to the Office of Data Management for issuance of the patent.

Telephone inquiries specific to this decision should be directed to Kenya A. McLaughlin, Petitions Attorney, at (571) 272-3222.

Christina Tartera Donnell

Christina Tartera Donnell
Senior Petitions Attorney
Office of Petitions

UNITED STATES PATENT AND TRADEMARK OFFICE

Commissioner for Patents
United States Patent and Trademark Office
P.O. Box 1450
Alexandria, VA 22313-1450
www.uspto.gov

MAILED

MAY 24 2010

OFFICE OF PETITIONS

FOLEY AND LARDNER LLP
SUITE 500
3000 K STREET NW
WASHINGTON DC 20007

In re Patent No. 7,615,204	:	DECISION ON REQUEST
Ajayan, et al.	:	FOR
Issue Date: November 10, 2009	:	RECONSIDERATION OF
Application No. 10/370,519	:	PATENT TERM ADJUSTMENT
Filed: February 24, 2003	:	and
Atty Docket No.047182-0108	:	NOTICE OF INTENT TO ISSUE
	:	CERTIFICATE OF CORRECTION

This is a decision on the petition filed on December 4, 2009, which is being treated as a petition under 37 CFR 1.705(d) requesting that the patent term adjustment indicated on the above-identified patent be corrected to indicate that the term of the above-identified patent is extended or adjusted by one thousand, four hundred and sixty-five (1,465) days.

The petition to correct the patent term adjustment indicated on the above-identified patent to indicate that the term of the above-identified patent is extended or adjusted by one thousand, four hundred and sixty-four (1,464) days is **GRANTED to the extent indicated herein.**

As the period from the filing date of the request for continued examination (RCE) to the issue date of the patent is not included in the "B" delay period, the over three year period begins on February 25, 2006, and ends on November 1, 2006, the day before the RCE was filed, and is 250 (not 251) days. See 35 U.S.C. 154(b)(1)(B)(i). As such, the patent term adjustment is 1,464, not 1,465 days.

Deposit account 19-0741 will be charged $200.00 for the fee required by 37 CFR 1.18(e).

The Office will *sua sponte* issue a certificate of correction. Pursuant to 37 CFR 1.322, the Office will not issue a certificate of correction without first providing assignee or

patentee an opportunity to be heard. Accordingly, patentees are given **one (1) month or thirty (30) days**, whichever is longer, from the mail date of this decision to respond. No extensions of time will be granted under § 1.136.

The application is being forwarded to the Certificates of Corrections Branch for issuance of a certificate of correction. The Office will issue a certificate of correction indicating that the term of the above-identified patent is extended or adjusted by **one thousand, four hundred and sixty-four (1,464) days**.

Telephone inquiries specific to this matter should be directed to the undersigned at (571) 272-3222.

Kenya McLaughlin
Petitions Attorney
Office of Petitions

Enclosure: Copy of DRAFT Certificate of Correction

DRAFT COPY

UNITED STATES PATENT AND TRADEMARK OFFICE

CERTIFICATE OF CORRECTION

PATENT : 7,615,204 B2

DATED : Nov. 10, 2009

INVENTOR(S) : Ajayan, et al.

It is certified that error appears in the above-identified patent and that said Letters Patent is hereby corrected as shown below:

On the cover page,

[*] Notice: Subject to any disclaimer, the term of this patent is extended or adjusted under 35 USC 154(b) by (1214) days

Delete the phrase "by 1214 days" and insert – by 1464 days--

UNITED STATES PATENT AND TRADEMARK OFFICE

Commissioner for Patents
United States Patent and Trademark Office
P.O. Box 1450
Alexandria, VA 22313-1450
www.uspto.gov

SUGHRUE MION PLLC
2100 PENNSYLVANIA AVENUE NW
SUITE 800
WASHINGTON, DC 20037

COPY MAILED

SEP 0 1 2005

OFFICE OF PETITIONS

In re Application of Seiji Tazaki Application No. 10/370,531 Filed: February 24, 2003 Attorney Docket No. Q72824	DECISION GRANTING PETITION UNDER 37 CFR 1.313(c)(2)

This is a decision on the petition, filed August 31, 2005, under 37 CFR 1.313(c)(2) to withdraw the above-identified application from issue after payment of the issue fee.

The petition is **GRANTED**.

The above-identified application is withdrawn from issue for consideration of a submission under 37 CFR 1.114 (request for continued examination). See 37 CFR 1.313(c)(2).

Petitioner is advised that the issue fee paid on August 2, 2005 in the above-identified application cannot be refunded. If, however, the above-identified application is again allowed, petitioner may request that it be applied towards the issue fee required by the new Notice of Allowance.[1]

Telephone inquiries should be directed to the undersigned at (571) 272-3218.

This matter is being referred to Technology Center AU 2878 for processing of the request for continued examination under 37 CFR 1.114 and for consideration of the Information Disclosure Statement.

Frances Hicks
Petitions Examiner
Office of Petitions

---

[1] *The request to apply the issue fee to the new Notice may be satisfied by completing and returning the new Issue Fee Transmittal Form PTOL-85(b), which includes the following language thereon: "Commissioner for Patents is requested to apply the Issue Fee and Publication Fee (if any) or re-apply any previously paid issue fee to the application identified above." Petitioner is advised that, whether a fee is indicated as being due or not, the Issue Fee Transmittal Form must be completed and timely submitted to avoid abandonment. Note the language in bold text on the first page of the Notice of Allowance and Fee(s) Due (PTOL-85).*

UNITED STATES PATENT AND TRADEMARK OFFICE

Commissioner for Patents
United States Patent and Trademark Office
P.O. Box 1450
Alexandria, VA 22313-1450
www.uspto.gov

AKERMAN SENTERFITT & EIDSON, P.A.
P.O. BOX 3188
WEST PALM BEACH, FL 33402-3188

COPY MAILED
SEP 15 2006
OFFICE OF PETITIONS

In re Application of :
Federick J. Stingel III et al :
Application No. 10/370,548 :
Filed: February 20, 2003 :
Attorney Docket No. 5184-35DIV

ON PETITION

This is a decision on the petition filed, September 15, 2006 under 37 CFR 1.313(c)(2) to withdraw the above-identified application from issue after payment of the issue fee.

The petition is **GRANTED**.

The above-identified application is withdrawn from issue for consideration of a submission under 37 CFR 1.114 (request for continued examination). See 37 CFR 1.313(c)(2).

Petitioner is advised that the issue fee paid on July 17, 2006 in the above-identified application cannot be refunded. If, however, the above-identified application is again allowed, petitioner may request that it be applied towards the issue fee required by the new Notice of Allowance.[1]

The file does not indicate a change of address has been submitted, although the address given on the petition differs from the address of record. If appropriate, a change of address should be filed in accordance with MPEP 601.03. A courtesy copy of this decision is being mailed to the address given on the petition; however, the Office will mail all future correspondence solely to the address of record.

Telephone inquiries should be directed to Irvin Dingle at (571) 272-3210.

This matter is being referred to Technology Center AU 3651 for processing of the request for continued examination under 37 CFR 1.114 and for consideration of the previously filed Information Disclosure Statement.

Irvin Dingle
Petitions Examiner
Office of Petitions

cc: Sean L. Ingram
Akerman Senterfitt
222 Lakeview Avenue, Suite 400
West Palm Beach, FL 33401-6183

---

[1] The request to apply the issue fee to the new Notice may be satisfied by completing and returning the new Issue Fee Transmittal Form PTOL-85(b), which includes the following language thereon: Commissioner for Patents is requested to apply the Issue Fee and Publication Fee (if any) or re-apply any previously paid issue fee to the application identified above. Petitioner is advised that, whether a fee is indicated as being due or not, the Issue Fee Transmittal Form must be completed and timely submitted to avoid abandonment. Note the language in bold text on the first page of the Notice of Allowance and Fee(s) Due (PTOL-85).

UNITED STATES PATENT AND TRADEMARK OFFICE

COMMISSIONER FOR PATENTS
UNITED STATES PATENT AND TRADEMARK OFFICE
P.O. BOX 1450
ALEXANDRIA, VA 22313-1450
www.uspto.gov

Paper No. 5

MARY ELLEN SEARS
M.H. SEARS LAW FIRM CHARTERED
910 17TH STREET, N.W., SUITE 1800
WASHINGTON, DC 20006

COPY MAILED
JUL 0 8 2004
OFFICE OF PETITIONS

In re Application of :
Piasio et al. :
Application No. 10/370,574 :
Filed: February 24, 2003 : ON PETITION
Title of Invention: :
DRY CHEMISTRY, LATERAL FLOW- :
RECONSTITUTED CHROMATOGRAPHIC :
ENZYME-DRIVEN ASSAY :

This is a decision in response to the Petition under 37 CFR 1.137(b), filed February 20, 2004, to revive the above-identified application.

This Petition is hereby **granted**.

The above-identified application became abandoned for failure to reply in a timely manner to the Notice to File Missing Parts of Provisional Application (hereinafter "Notice"), mailed April 9, 2003. The Notice required an executed oath or declaration and a late filing fee surcharge; replacement drawings in compliance with 37 CFR 1.84 and 37 CFR 1.121, and an abstract not exceeding 150 words commencing on a separate sheet. The Notice set a two (2) month period for reply from the mail date of the Notice, and also provided for extensions of time under 37 CFR 1.136(a). No reply having been received, the application became abandoned June 10, 2003. A Notice of Abandonment was mailed February 2, 2004.

With the instant petition, Applicant has filed responses to the Notice and completed the requirements of a grantable petition under 37 CFR 1.137(b).

The application is being returned to the Office of Initial Patent Examination for continued processing.

Telephone inquiries concerning this matter should be directed to the undersigned at (703) 305-0014.

Derek L. Woods
Petitions Attorney
Office of Petitions

UNITED STATES PATENT AND TRADEMARK OFFICE

Commissioner for Patents
United States Patent and Trademark Office
P.O. Box 1450
Alexandria, VA 22313-1450
www.uspto.gov

FOLEY HOAG, LLP
PATENT GROUP, WORLD TRADE CENTER WEST
155 SEAPORT BLVD
BOSTON, MA 02110

COPY MAILED
APR 19 2006
OFFICE OF PETITIONS

In re Application of :
Piasio, et al. :
Application No. 10/370,574 :
Filed: February 24, 2003 :
Attorney Docket No. ISA-103.01 :

ON PETITION

This is a decision on the petition under 37 CFR 1.181, filed February 21, 2006, to withdraw the holding of abandonment.

The petition is **GRANTED**.

This application became abandoned for failure to timely file a proper reply to the non-final Office action mailed June 10, 2005, which set a one (1) month period for reply. Accordingly, this application became abandoned on July 11, 2005.

Petitioner asserts the Office action was never received and that the Office mailed the action to the wrong address. A review of the application file indicates that the Office action was mailed to an incorrect address. The Office sincerely apologizes for this error.

Accordingly, the petition is granted and the holding of abandonment is withdrawn.

This application is being forwarded to Technology Center 1600, for re-mailing of the Notice originally mailed June 10, 2005, with a new period for response.

Telephone inquiries concerning this matter may be directed to the undersigned at (571) 272-3228.

Edward J. Tannouse
Petitions Attorney
Office of Petitions
Office of the Deputy Commissioner
for Patent Examination Policy

UNITED STATES PATENT AND TRADEMARK OFFICE

COMMISSIONER FOR PATENTS
UNITED STATES PATENT AND TRADEMARK OFFICE
P.O. BOX 1450
ALEXANDRIA, VA 22313-1450
www.uspto.gov

NOV 19 2003

Paper No. 111203

OBLON, SPIVAK, McCLELLAND, MAIER & NEUSTADT, P.C.
1940 DUKE STREET
ALEXANDRIA, VA 22314

In re Application of	)	
YEARWOOD et al.	)	
Application No.10/370,613	)	DECISION ON REQUEST TO
Filed: February 24, 2003	)	WITHDRAW FROM RECORD
For: Attorney Docket No. 234480US	)	

This is a decision on the request to withdraw as attorney of record under 37 C.F.R. § 1.36, filed July 17, 2003.

A grantable request to withdraw as attorney of record should indicate thereon the present mailing addresses of the attorney(s) who is/are withdrawing from the record and of the applicant. The request for withdrawal must be signed by every attorney seeking to withdraw or contain a clear indication that one attorney is signing on behalf of another/others. A request to withdraw will not be approved unless at least 30 (thirty) days would remain between the date of approval and the later of the expiration date of a time to file a response or the expiration date of the maximum time period which can be extended under 37 C.F.R. § 1.136(a).

The request meets all the above listed requirements.

The request is APPROVED.

All future communications from the Office will be directed to the below-listed address until otherwise notified by applicant.

José G. Dees, Special Program Examiner
Technology Center 2800
Semiconductors, Electrical and Optical
Systems and Components

cc: T.M. GREGORY & CO.
26 Cyril Street
Northampton, England NN1 5EL

SPE D. Walsh

SPE RESPONSE FOR CERTIFICATE OF CORRECTION 10/370,623

Paper No.: _____

DATE : 7/22/05

TO SPE OF : ART UNIT 3653

SUBJECT : Request for Certificate of Correction on Patent No.: 6869070

A response is requested with respect to the accompanying request for a certificate of correction.

Please complete this form and return with file, within 7 days to:
Palm location **7580, Certificates of Correction Branch – South Tower – 9A22**
If response is for an IFW, **return to employee (named below) via PUBSCofC Team in MADRAS.**
With respect to the change(s) requested, correcting Office and/or Applicant's errors, should the patent read as shown in the certificate of correction (COCIN)? No new matter should be introduced, nor should the scope or meaning of the claims be changed.

Lamonte M. Newsome

Thank You For Your Assistance

Certificates of Correction Branch
Tel. No. 703-305-8309

The request for issuing the above-identified correction(s) is hereby:
Note your decision on the appropriate box.

- ☒ **Approved** — All changes apply.
- ☐ **Approved in Part** — Specify below which changes **do not** apply.
- ☐ **Denied** — State the reasons for denial below.

Comments:

Examiner: [signature]

DONALD P. WALSH
SUPERVISORY PATENT EXAMINER
TECHNOLOGY CENTER 3600

SPE 3653 **Art Unit**

PTOL-306 (REV. 7/03)

U.S. DEPARTMENT OF COMMERCE Patent and Trademark Office

UNITED STATES PATENT AND TRADEMARK OFFICE

COMMISSIONER FOR PATENTS
UNITED STATES PATENT AND TRADEMARK OFFICE
P.O. BOX 1450
ALEXANDRIA, VA 22313-1450
www.uspto.gov

FITZPATRICK CELLA HARPER &
SCINTO
30 ROCKEFELLER PLAZA
NEW YORK, NY 10112

COPY MAILED
SEP 2 0 2006
OFFICE OF PETITIONS

In re Patent of :
Shimamura et al. :
Patent No. 6,869,070 :
Issued: March 22, 2005 : ON PETITION
For: SHEET FEEDING APPARATUS AND :
IMAGE FORMING APPARATUS AND IMAGE :
READING APPARATUS PROVIDED WITH :
SAME :

This is a decision on the Petition, filed July 20, 2005, to correct the name of the assignee in the above-identified patent. The petition is properly treated as a request under 37 CFR 1.183 to correct the assignee data on the issue fee transmittal form. The petition is properly treated as a request under 37 CFR 3.81(b)[1]. This is also a decision under 37 CFR 1.182 to reprint the assignee's name on the front page of the letters patent.

The Petition under 37 CFR 3.81 is **granted**.

The Petition under 37 CFR 1.182 to reprint the front page of the Letters Patent is **granted**.

Petitioner is advised that it is the practice of the Patent and Trademark Office (PTO) to issue a certificate of correction to correct an error on the part of an applicant in those cases where the assignee or attorney data is incorrect or was inadvertently not provided at the time of payment of the issue fee, or the inventor's name is misspelled or otherwise incorrect. Note 37 CFR 1.323 and MPEP 1481 (35 U.S.C. 255), which states

[1] See, 1283 OG 148 22 June 2004, 69 Fed. Reg. 29865 26 May 2004

> Whenever a mistake of a clerical or typographical nature, or of minor character, which was not the fault of the Patent and Trademark Office, appears in a patent and a showing has been made that such mistake occurred in good faith, the Director may, upon payment of the required fee, issue a certificate of correction, if the correction does not involve such changes in the patent as would constitute new matter or would require reexamination. Such patent, together with the certificate, shall have the same effect and operation in law on the trial of actions for causes thereafter arising as if the same had been originally issued in such corrected form.

In view of the above, and since the desired correction of the assignee's name can be effected by way of a Certificate of Correction, it is unnecessary to reprint the front page of the Letters Patent.

However, the PTO will reprint the front page of the Letters Patent if the following conditions are met:

1. Submission of a petition under 37 CFR 1.182
2. Payment of a $400 petition fee
3. Payment of a $100 fee to place a certificate of correction in the PTO archives
4. Return of the original Letters Patent

Petitioner's deposit account, 06-1205, has been charged the difference between the amount submitted for the petition, $130.00, and the actual petition fee for a petition under 37 CFR 1.182, $400 petition fee, or $270.00. Applicant has also submitted $100 to place a certificate of correction in the PTO archives, and submitted the original letters patent with the instant petition.

Accordingly, since petitioner has met all four conditions noted above, the front page of the Letters Patent will be reprinted to include the assignee's name.

The application is being referred to the Certificate of Corrections Branch for appropriate processing of a Certificate of Correction to place in the archives of the PTO. Thereafter, the file will be forwarded to Publishing Division for reprinting of the front page of the original Letters Patent.

Telephone inquiries concerning this matter should be directed to the undersigned at (571) 272-3232. Any questions concerning the issuance of the Certificate of Correction should be directed to the Certificate of Correction Branch at (703) 305-8309.

Derek L. Woods
Attorney
Office of Petitions

UNITED STATES PATENT AND TRADEMARK OFFICE

Commissioner for Patents
United States Patent and Trademark Office
P.O. Box 1450
Alexandria, VA 22313-1450
www.uspto.gov

SCHLUMBERGER TECHNOLOGY CORPORATION
David Cate
IP DEPT., WELL STIMULATION
110 SCHLUMBERGER DRIVE, MD1
SUGAR LAND TX 77478

COPY MAILED

SEP 28 2007

OFFICE OF PETITIONS

In re Application of	:	
Fu, Diankui	:	
Application No. 10/370,633	:	ON PETITION
Filed: February 20, 2003	:	
Attorney Docket No. 56.0709	:	

This is a decision on the petition under 37 C.F.R. § 1.137(b), filed April 20, 2007, to revive the above-identified application.

The petition is **GRANTED.**

The petition satisfies the conditions for revival pursuant to the provisions of 37 CFR 1.137(b) in that (1) the reply in the form of an Amendment; (2) the petition fee; and (3) the required statement of unintentional delay have been received. Accordingly, the response has been accepted as having been unintentionally delayed.

This matter is being referred to Technology Center 1700 for further examination on the merits.

Telephone inquiries regarding this decision should be directed to the undersigned at (571) 272-3206.

Liana Walsh
Petitions Examiner
Office of Petitions

UNITED STATES PATENT AND TRADEMARK OFFICE

Commissioner for Pa.
United States Patent and Trademark Office
P.O. Box 1450
Alexandria, VA 22313-1450
www.uspto.gov

NOV 2 1 2006

WILSON SONSINI GOODRICH & ROSATI
650 PAGE MILL ROAD
PALO ALTO CA 94304-1050

In re Application of: GANZ, ROBERT A. et al Serial No.: 10/370,645 Filed: Feb. 19, 2003 Docket: 39423-0014 Title: METHOD OF TREATING ABNORMAL TISSUE IN THE HUMAN ESOPHAGUS	DECISION ON PETITION under 37 CFR 1.181

This is a decision on the petition filed on Sept. 29, 2006 to request to vacate the second Examiner's Answer of Aug. 1, 2006 and compel the examiner's compliance with an Order from the Board of Appeals and Interferences issued on June 28, 2006. In the alternative, petitioner requests one of the Examiner's grounds of rejection in the second Examiner's Answer be designated as a new ground of rejection raised for the first time in the Examiner's Answer.

The petition is considered pursuant to 37 CFR 1.181, and no fee is required. The fee paid for this petition shall be refunded.

The petition is **GRANTED**.

In the petition the petitioner requested the Office to vacate the second Examiner's Answer of Aug. 1, 2006 and instruct the Examiner to comply with the Order issued by the Board of Patent Appeals and Interferences of June 28, 2006. In the alternative, the petitioner also requested the examiner to designate one of the grounds of rejection in the second Examiner's Answer as a new ground of rejection raised for the first time in the Examiner's Answer.

The record shows that:

1) A final rejection was issued on June 16, 2005.
2) In response to the final rejection, the applicant filed a Pre-Appeal Brief Request for Review on Sep. 8, 2005.
3) On Sep. 30, 2005, a Notice of Panel Decision from Pre-Appeal Brief Review was mailed to the applicants. The applicant was notified that the application remains under appeal and appeal brief was due in accordance with 37 CFR 41.37.
4) The applicant filed the Appeal Brief on Nov. 8, 2005 to appeal the finally rejected claims 80-101 and 103-131.

5) The examiner issued an Examiner's Answer on Jan. 25, 2006. In the "Response to Argument" on page 9 of the Examiner's Answer, the examiner for the first time drew a diagram of esophageal anatomy and proceeded forward to explain his rejection with respect to the references applied and the diagram. The diagram was intended to aid in this appeal. The examiner provided a very brief primer on relevant esophageal anatomy. The diagram shows four basic layers in the esophageal wall, namely, submucosal, mucosal, muscularis and adventitia.
6) On March 24, 2006, the applicant filed a Reply Brief and argued that the examiner did not cite any source for the examiner's view of anatomy and urged the Board not to consider the examiner's diagram or anatomical picture as part of the record.
7) On June 9, 2006, the examiner sent a response to acknowledge of reply brief and argued that the anatomical picture provided in Examiner's Answer of Jan. 25, 2006 was found in US National Cancer Institute' s web page and gave the appellant the wed site address.
8) On June 28, 2006, the Board remanded the undocketed appeal case with an Order, inter alia, to vacate the first Examiner's Answer of Jan. 25, 2006 and issued a revised Examiner's Answer to supply a complete list of references under the Evidence Relied Upon section, vacate the response mailed to the appellant on June 9, 2006 and either obtain a TC Director's approval for a supplemental Examiner's Answer or file a proper response to the Reply Brief received on March 24, 2006 and for such further action as may be appropriate.
9) In compliance with the Order, on Aug. 1, 2006, the examiner issued a new Examiner's Answer and listed anatomical picture under the Evidence Relied Upon section of the second Examiner's Answer.
10) In response to this new Examiner's Answer, the current petition is filed to seek relief. In the petition, the petitioner requests to vacate the second Examiner Answer of Aug. 1, 2006 and compel the examiner to comply with the Order issued by the Board of Appeals. In the alternative, the petitioner requests the examiner to designate one of the Examiner's grounds of rejection in the second Examiner's Answer as a new ground of rejection.

Analysis

Based on the record of the application, it appears to be the examiner's intention to add the anatomical picture downloaded from US National Cancer Institute's web page for the purposes of clarifying and supporting his arguments in the Examiner's Answer of Jan. 25, 2006. If the references in the final rejection of June 16, 2005 are properly applied under 35 USC 103, then, it is not necessary to add this anatomical picture downloaded from US National Cancer Institute's web page for further clarification. One skilled in the art would have known what a human anatomical picture is. This is tantamount to citing the periodic chart when looking up for properties of elements. Therefore, this anatomical picture should not have been added in the Examiner's Answer. If the anatomical picture is necessary to understand and explain the rejection, then, the anatomical picture must be applied against the claims under the rejection. In the second Examiner's Answer of Aug. 1, 2006, the examiner listed the anatomical picture under the Evidence Relied Upon section, which appears to be one of the prior art references against the claims under the rejection. By doing so, the addition of the anatomical picture in the Examiner's Answer constitutes new ground of rejection.

In order to clear the record and comply with MPEP 1207 and the Order by the Board of Appeals, the Examiner is directed to: 1) vacate the first Examiner's Answer of Jan. 25, 2006 pursuant to the Board Order; 2) vacate the second Examiner Answers of Aug. 1, 2006 as requested in the current petition; 3) vacate the response to the Reply Brief received on March 24, 2006 pursuant to the Order by the Board; 4) issue a revised Examiner's Answer without any reference to the anatomical picture from US National Cancer Institute Web page if the examiner believes the final rejection of June 16, 2005 is proper or with the TC director's approval to designate one of the examiner's grounds of rejection in the revised Examiner's Answer as a new ground of rejection with the anatomical picture from US National Cancer Institute Web page as one of the prior art references against the claims under appeal as requested in the petition; and 4) issue a proper response to the Reply Brief received on March 24, 2006, if necessary. Under the circumstance, the examiner has the option to re-open prosecution if the anatomical picture from the US National Cancer Institute's web page is used as one of the prior art references against the claims.

Conclusion

For the foregoing reasons, the relief requested by petitioner is granted. A revised Examiner's Answer will be issued not inconsistent with this Decision.

The application is being forwarded to the Art Unit 3739 further processing. Any inquiry regarding this decision should be directed to Henry Yuen, Special Program Examiner, at (571) 272-4856.

PETITION GRANTED

Frederick R. Schmidt, Director
Technology Center 3700

UNITED STATES PATENT AND TRADEMARK OFFICE

UNITED STATES DEPARTMENT OF COMMERCE
United States Patent and Trademark Office
Address: COMMISSIONER FOR PATENTS
P.O. Box 1450
Alexandria, Virginia 22313-1450
www.uspto.gov

APPL NO.	FILING OR 371 (c) DATE	ART UNIT	FIL FEE REC'D	ATTY.DOCKET NO	DRAWINGS	TOT CLMS	IND CLMS
10/370,679	02/19/2003	1623	476	01-161		24	3

CONFIRMATION NO. 1055

CORRECTED FILING RECEIPT

OC000000019859077

27716
CV THERAPEUTICS, INC.
3172 PORTER DRIVE
PALO ALTO, CA 94304

Date Mailed: 08/02/2006

Receipt is acknowledged of this regular Patent Application. It will be considered in its order and you will be notified as to the results of the examination. Be sure to provide the U.S. APPLICATION NUMBER, FILING DATE, NAME OF APPLICANT, and TITLE OF INVENTION when inquiring about this application. Fees transmitted by check or draft are subject to collection. Please verify the accuracy of the data presented on this receipt. **If an error is noted on this Filing Receipt, please mail to the Commissioner for Patents P.O. Box 1450 Alexandria Va 22313-1450. Please provide a copy of this Filing Receipt with the changes noted thereon. If you received a "Notice to File Missing Parts" for this application, please submit any corrections to this Filing Receipt with your reply to the Notice. When the USPTO processes the reply to the Notice, the USPTO will generate another Filing Receipt incorporating the requested corrections (if appropriate).**

Applicant(s)

Prabha Ibrahim, Mountain View, CA;
Elfatih Elzein, Fremont, CA;
Kevin Shenk, Palo Alto, CA;
Robert Jiang, Mountain View, CA;
Jeff Zablocki, Mountain View, CA;
Xiaofen Li, Palo Alto, CA;
Christopher Morrison, Sunnyvale, CA;
Thao Perry, San Jose, CA;
Dengming Xiao, Longmont, CO;

Power of Attorney: The patent practitioners associated with Customer Number **27716**.

Domestic Priority data as claimed by applicant

This appln claims benefit of 60/357,961 02/19/2002

Foreign Applications

If Required, Foreign Filing License Granted: 04/28/2003

The country code and number of your priority application, to be used for filing abroad under the Paris Convention, is US10/370,679

Projected Publication Date: Not Applicable

Non-Publication Request: No

Early Publication Request: No

**** SMALL ENTITY ****

Title

PARTIAL AND FULL AGONISTS OF A1 ADENOSINE RECEPTORS

Preliminary Class

514

PROTECTING YOUR INVENTION OUTSIDE THE UNITED STATES

Since the rights granted by a U.S. patent extend only throughout the territory of the United States and have no effect in a foreign country, an inventor who wishes patent protection in another country must apply for a patent in a specific country or in regional patent offices. Applicants may wish to consider the filing of an international application under the Patent Cooperation Treaty (PCT). An international (PCT) application generally has the same effect as a regular national patent application in each PCT-member country. The PCT process **simplifies** the filing of patent applications on the same invention in member countries, but **does not result** in a grant of "an international patent" and does not eliminate the need of applicants to file additional documents and fees in countries where patent protection is desired.

Almost every country has its own patent law, and a person desiring a patent in a particular country must make an application for patent in that country in accordance with its particular laws. Since the laws of many countries differ in various respects from the patent law of the United States, applicants are advised to seek guidance from specific foreign countries to ensure that patent rights are not lost prematurely.

Applicants also are advised that in the case of inventions made in the United States, the Director of the USPTO must issue a license before applicants can apply for a patent in a foreign country. The filing of a U.S. patent application serves as a request for a foreign filing license. The application's filing receipt contains further information and guidance as to the status of applicant's license for foreign filing.

Applicants may wish to consult the USPTO booklet, "General Information Concerning Patents" (specifically, the section entitled "Treaties and Foreign Patents") for more information on timeframes and deadlines for filing foreign patent applications. The guide is available either by contacting the USPTO Contact Center at 800-786-9199, or it can be viewed on the USPTO website at http://www.uspto.gov/web/offices/pac/doc/general/index.html.

For information on preventing theft of your intellectual property (patents, trademarks and copyrights), you may wish to consult the U.S. Government website, http://www.stopfakes.gov. Part of a Department of Commerce initiative, this website includes self-help "toolkits" giving innovators guidance on how to protect intellectual property in specific countries such as China, Korea and Mexico. For questions regarding patent enforcement issues, applicants may call the U.S. Government hotline at 1-866-999-HALT (1-866-999-4158).

LICENSE FOR FOREIGN FILING UNDER
Title 35, United States Code, Section 184
Title 37, Code of Federal Regulations, 5.11 & 5.15

GRANTED

The applicant has been granted a license under 35 U.S.C. 184, if the phrase "IF REQUIRED, FOREIGN FILING LICENSE GRANTED" followed by a date appears on this form. Such licenses are issued in all applications where the conditions for issuance of a license have been met, regardless of whether or not a license may be required as set forth in 37 CFR 5.15. The scope and limitations of this license are set forth in 37 CFR 5.15(a) unless an earlier license has been issued under 37 CFR 5.15(b). The license is subject to revocation upon written notification. The

date indicated is the effective date of the license, unless an earlier license of similar scope has been granted under 37 CFR 5.13 or 5.14.

This license is to be retained by the licensee and may be used at any time on or after the effective date thereof unless it is revoked. This license is automatically transferred to any related applications(s) filed under 37 CFR 1.53(d). This license is not retroactive.

The grant of a license does not in any way lessen the responsibility of a licensee for the security of the subject matter as imposed by any Government contract or the provisions of existing laws relating to espionage and the national security or the export of technical data. Licensees should apprise themselves of current regulations especially with respect to certain countries, of other agencies, particularly the Office of Defense Trade Controls, Department of State (with respect to Arms, Munitions and Implements of War (22 CFR 121-128)); the Bureau of Industry and Security, Department of Commerce (15 CFR parts 730-774); the Office of Foreign Assets Control, Department of Treasury (31 CFR Parts 500+) and the Department of Energy.

NOT GRANTED

No license under 35 U.S.C. 184 has been granted at this time, if the phrase "IF REQUIRED, FOREIGN FILING LICENSE GRANTED" DOES NOT appear on this form. Applicant may still petition for a license under 37 CFR 5.12, if a license is desired before the expiration of 6 months from the filing date of the application. If 6 months has lapsed from the filing date of this application and the licensee has not received any indication of a secrecy order under 35 U.S.C. 181, the licensee may foreign file the application pursuant to 37 CFR 5.15(b).

UNITED STATES PATENT AND TRADEMARK OFFICE

Commissioner for Patents
United States Patent and Trademark Office
P.O. Box 1450
Alexandria, VA 22313-1450
www.uspto.gov

OLIFF & BERRIDGE, PLC
P.O. BOX 320850
ALEXANDRIA, VA 22320-4850

MAILED

JAN 06 2010

OFFICE OF PETITIONS

In re Application of :
Hirotaka Kawabata et al :
Application No. 10/370,693 : ON PETITION
Filed: February 24, 2003 :
Attorney Docket No. 115148

This is a decision on the petition, filed December 7, 2009 under 37 CFR 1.313(c)(2) to withdraw the above-identified application from issue after payment of the issue fee.

The petition is **GRANTED**.

The above-identified application is withdrawn from issue for consideration of a submission under 37 CFR 1.114 (request for continued examination). See 37 CFR 1.313(c)(2).

Petitioner is advised that the issue fee paid on November 24, 2009 in the above-identified application cannot be refunded. If, however, the above-identified application is again allowed, petitioner may request that it be applied towards the issue fee required by the new Notice of Allowance.[1]

Telephone inquiries should be directed to Irvin Dingle at (571) 272-3210.

This matter is being referred to Technology Center AU 2614 for processing of the request for continued examination under 37 CFR 1.114 and for consideration of the concurrently filed Information Disclosure Statement.

/Irvin Dingle/
Irvin Dingle
Petitions Examiner
Office of Petitions

---

[1] The request to apply the issue fee to the new Notice may be satisfied by completing and returning the new Issue Fee Transmittal Form PTOL-85(b), which includes the following language thereon: Commissioner for Patents is requested to apply the Issue Fee and Publication Fee (if any) or re-apply any previously paid issue fee to the application identified above. Petitioner is advised that, whether a fee is indicated as being due or not, the Issue Fee Transmittal Form **must** be completed and timely submitted to avoid abandonment. Note the language in bold text on the first page of the Notice of Allowance and Fee(s) Due (PTOL-85).

UNITED STATES PATENT AND TRADEMARK OFFICE

Commissioner for Patents
United States Patent and Trademark Office
P.O. Box 1450
Alexandria, VA 22313-1450
www.uspto.gov

OLIFF & BERRIDGE, PLC
P.O. BOX 19928
ALEXANDRIA VA 22320

COPY MAILED

JUL 13 2005

OFFICE OF PETITIONS

ON PETITION

In re Patent No. 6,893,989 :
Issued May 17, 2005 :
Application No. 10/370,700 :
Filed: February 24, 2003 :
Attorney Docket Number: 104347.01 :

This is a decision on the petition, filed June 23, 2005, under 37 CFR 1.183, which is being treated as a request under 37 CFR 3.81(b)[1] to correct the assignee's name the front of the Patent.

The petition is **GRANTED**.

Petitioner states that the correct assignee's name is Teijin Twaron GmbH and that the incorrect assignee's name was unintentionally included on the Fee(s) Transmittal form PTOL-85(b) at the time of payment of the issue fee. Accordingly, petitioner requests that a certificate of correction be issued to reflect the correct assignee on the front page of the Letters Patent in the patent to be issued from the application.

37 CFR 3.81(b), effective June 25, 2004, reads:

> *After payment of the issue fee:* Any request for issuance of an application in the name of the assignee submitted after the date of payment of the issue fee, and any request for a patent to be corrected to state the name of the assignee, must state that the assignment was submitted for recordation as set forth in § 3.11 before issuance of the patent, and must include a request for a certificate of correction under § 1.323 of this chapter (accompanied by the fee set forth in § 1.20(a) and the processing fee set forth in § 1.17(i) of this chapter.

The request was accompanied by a certificate of correction (and fee) as required by 3.81(b). Further, Office assignment records reflect that Teijin Twaron GmbH is the assignee of record. Accordingly, as the request complies with the provisions of 37 CFR 3.81(b), it would be appropriate for a certificate of correction to issue.

---

[1] *See* Official Gazette of June 22, 2004

Inquiries concerning this decision should be directed to the undersigned at (571) 272-3212. Any questions concerning the issuance of a certificate of correction should be directed to the Certificates of Correction Branch at (703) 305-8309.

This matter is being referred to the Certificates of Correction Branch for issuance of a certificate of correction.

Patricia Faison-Ball

Patricia Faison-Ball
Senior Petitions Attorney
Office of Petitions

UNITED STATES PATENT AND TRADEMARK OFFICE

Commissioner for Patents
United States Patent and Trademark Office
P.O. Box 1450
Alexandria, VA 22313-1450
www.uspto.gov

C. IRVIN McCLELLAND
OBLON, SPIVAK, McCLELLAND,
MAIER & NEUSTADT, PC
1940 DUKE STREET
ALEXANDRIA, VA 22314

COPY MAILED
NOV 09 2006
OFFICE OF PETITIONS

In re Application of Kenichi Maeda et al Application No. 10/370,712 Filed: February 24, 2003 Attorney Docket No. 23438US2SRD	DECISION GRANTING PETITION UNDER 37 CFR 1.313(c)(2)

This is a decision on the petition, filed November 8, 2006, under 37 CFR 1.313(c)(2) to withdraw the above-identified application from issue after payment of the issue fee.

The petition is **GRANTED**.

The above-identified application is withdrawn from issue for consideration of a submission under 37 CFR 1.114 (request for continued examination). See 37 CFR 1.313(c)(2).

Petitioner is advised that the issue fee paid on October 20, 2006 in the above-identified application cannot be refunded. If, however, the above-identified application is again allowed, petitioner may request that it be applied towards the issue fee required by the new Notice of Allowance.[1]

Telephone inquiries should be directed to the undersigned at (571) 272-3218.

This matter is being referred to Technology Center AU 2624 for processing of the request for continued examination under 37 CFR 1.114 and for consideration of the Information Disclosure Statement.

Frances Hicks
Petitions Examiner
Office of Petitions

C:\Documents and Settings\FHicks\My Documents\470\NOV10\370712.wpd

---

[1] *The request to apply the issue fee to the new Notice may be satisfied by completing and returning the new Part B – Fee(s) Transmittal Form (along with any balance due at the time of submission). Petitioner is advised that the Issue Fee Transmittal Form must be completed and timely submitted to avoid abandonment.*

UNITED STATES PATENT AND TRADEMARK OFFICE

Commissioner for Patents
United States Patent and Trademark Office
P.O. Box 1450
Alexandria, VA 22313-1450
www.uspto.gov

GENENTECH, INC.
1 DNA WAY
SOUTH SAN FRANCISCO CA
94080

COPY MAILED

SEP 28 2007

OFFICE OF PETITIONS

In re Application of

Bodary, et al. :

Application No. 10/370,715

: DECISION ON PETITION

Filed: February 21, 2003

:

Attorney Docket No. P1948R1

This is a decision on the petition under 37 CFR 1.137(b), filed, January 4, 2007, to revive the above-identified application.

The petition is **GRANTED**.

The above-cited application became abandoned for failure to reply in a timely manner to the final Office action mailed April 5, 2006, which set a shortened statutory period for reply of three (3) months from its mailing date. No extension of time pursuant to 37 CFR 1.136(a) was obtained within the allowable period. Accordingly, the application became abandoned on July 6, 2006. A Notice of Abandonment was mailed on November 8, 2006.

The continuing application 11/537,311, filed September 29, 2006, is noted. The subject application is again abandoned in favor of the continuing application.

The request for an extension of time within the third month filed January 4, 2007, is noted but cannot be granted as the request was made outside the maximum statutory period for reply to the non-final Office action. The amount of $1,020.00 will be refunded, in due course.

Telephone inquiries concerning this decision should be directed to the undersigned at (571) 272-3222.

Kenya A. McLaughlin
Petitions Attorney
Office of Petitions

UNITED STATES PATENT AND TRADEMARK OFFICE

Commissioner for Patents
United States Patent and Trademark Office
P.O. Box 1450
Alexandria, VA 22313-1450
www.uspto.gov

Edward A. Pennington, Esq.
Swidler Berlin Shereff Friedman, LLP
Suite 300
3000 K Street, N.W.
Washington DC 20007-5116

COPY MAILED

NOV 0 3 2005

OFFICE OF PETITIONS

In re Application of	:	
Mohinder Singh Garcha	:	
Application No. 10/370,720	:	DECISION ON PETITIONS
Filed: February 24, 2003	:	UNDER 37 CFR 1.55(c)
Attorney Docket No. 19111.0107	:	

This is a decision on the petitions under 37 CFR § 1.55(c), filed October 6, 2005, for acceptance of an unintentionally delayed claim under 35 U.S.C. § 119(a)-(d) for benefit of the filing date of foreign United Kingdom Application No. 0204357.8, filed February 25, 2002.

The petition is **DISMISSED AS MOOT.**

This application was filed on February 24, 2003, which is after November 29, 2000 and within 12 months of February 25, 2002 (the filing date of the foreign application to which benefit is now being claimed). On May 1, 2003, an executed oath/declaration was received which identifies the foreign application for which priority is claimed by application number, country and filing date. The required petition fee of $1370 was received with the petition. Lastly, petitioner has provided an adequate statement of unintentional delay.

The current procedure where a claim for priority under 37 CFR § 1.55(c) is not included in the oath or declaration or a transmittal letter filed with the application and the Office notes the claim for priority, no petition will be required to accept a late claim for priority. This is because the application would have been scheduled for publication on the basis of the information concerning the acknowledgement of the foreign applications in the application within the time period set forth in 37 CFR § 1.55(c). However, on the other hand, if the USPTO does not note the claim for priority to the prior-filed application(s) set forth in the oath or declaration or transmittal letter submitted with the application, a petition will be required to accept a late claim for priority under 37 CFR § 1.55(c). In the present case, the Office noted the acknowledgement of the prior-filed applications in the oath or declaration filed with the application, as shown by their inclusion on the filing receipt.

Application No. 10/370,720

In view of the above, the $1370 petition fee submitted is unnecessary and will be refunded to petitioner's deposit account in due course.

Any questions concerning this decision on petition may be directed to David Bucci at (571) 272-7099. All other inquiries concerning either the examination procedures or status of the application should be directed to the Technology Center.

This application is being forwarded to Technology Center AU 2178 for examination in due course and for consideration by the examiner of record of the foreign priority claim under 35 U.S.C. § 119(a)-(d).

Brian Hearn
Petitions Examiner
Office of Petitions

UNITED STATES PATENT & TRADEMARK OFFICE
Washington, D.C. 20231

REQUEST FOR PATENT FEE REFUND

1 Date of Request: 10/24/05

2 Serial/Patent # 10/370,720

	3 Please refund the following fee(s):	4 PAPER NUMBER	5 DATE FILED	6 AMOUNT
	Filing			$
	Amendment			$
	Extension of Time			$
	Notice of Appeal/Appeal			$
X	Petition		10/6/05	$ 1370
	Issue			$
	Cert of Correction/Terminal Disc.			$
	Maintenance			$
	Assignment			$
	Other			$

7 TOTAL AMOUNT OF REFUND $ 1370

8 TO BE REFUNDED BY:

	Treasury Check
	Credit Deposit A/C #:
	9 1 9 -- 5 1 2 7

10 REASON:

	Overpayment
	Duplicate Payment
X	No Fee Due (Explanation):

Petition dismissed as moot, fee unnecessary

11 REFUND REQUESTED BY:

TYPED/PRINTED NAME: David Bucci TITLE: Petitions Examiner

SIGNATURE: [signature] PHONE: 571-272-7099

OFFICE:

****

THIS SPACE RESERVED FOR FINANCE USE ONLY:

APPROVED: [signature] DATE: 10/3/05

Instructions for completion of this form appear on the back. After completion, attach white and yellow copies to the official file and mail or hand-carry to:

Office of Finance
Refund Branch
Crystal Park One, Room 802B

FORM PTO 1577
(01/90)

Attorney Reference: 19111.0107

OIPE IAP
OCT 06 2005
PATENT & TRADEMARK OFFICE

IN THE UNITED STATES PATENT AND TRADEMARK OFFICE

In re Application of:	
Mohinder S. Garcha	Confirmation No. 8484
Application No.: 10/370,720	Art Unit: 2178
Filed: February 24, 2003	Examiner: Thu V. Huynh
Title: Mark-Up Language Conversion	

PETITION TO ACCEPT AN UNINTENTIONALLY DELAYED CLAIM FOR PRIORITY

Mail Stop Petitions
Commissioner for Patents
P.O. Box 1450
Alexandria, Virginia 22313-1450

Sir:

Applicant hereby petitions the Commissioner of Patents and Trademarks to accept an unintentionally delay claim for priority under 37 C.F.R. §1.55(c). In accordance with 37 C.F.R. §1.55(c), Applicant authorizes the Commissioner to charge $ 1370.00 to Deposit Account No. 19-5127, Order No. 19111.0107 to cover the fee for this Petition as set forth in 37 C.F.R. § 1.17 (t). No additional fees are believed to be necessary. In the event that additional fees are required in connection with the filing of this Petition, please charge the fees to Deposit Account No. 19-5127, Order No. 19111.0107.

It is requested that the U.S. Patent and Trademark Office extend the right of priority to United Kingdom Application No. 0204357.8, filed February 25, 2002 as provided by 35 U.S.C. §119. A claim for priority to the application was made on August 8, 2003. The entire delay between the date the claim was due under 37 C.F.R. §1.55 (a)(1) and the date the claim was filed was unintentional.

Adjustment date: 11/03/2005 AKELLEY
10/07/2005 SZEWDIE1 00000128 195127 10370720
01 FC:1454 1370.00 CR

10/07/2005 SZEWDIE1 00000128 195127 10370720
01 FC:1454 1370.00 DA

UNITED STATES PATENT AND TRADEMARK OFFICE

Commissioner for Patents
United States Patent and Trademark Office
P.O. Box 1450
Alexandria, VA 22313-1450
www.uspto.gov

BINGHAM MCCUTCHEN, LLP
2020 K Street, NW
BOX IP
Washington, DC 20006

COPY MAILED

FEB 19 2008

OFFICE OF PETITIONS

In re Application of :
Mohinder Singh Garcha :
Application No. 10/370,720 :
Filed: February 24, 2003 :
Attorney Docket No. 19111.0107 :

ON PETITION

This is a decision on the petition under the unintentional provisions of 37 CFR 1.137(b), filed 31 December 2007, to revive the above-identified application.

The petition is **DISMISSED**.

Any request for reconsideration of this decision must be submitted within TWO (2) MONTHS from the mail date of this decision. Extensions of time under 37 CFR 1.136(a) are permitted. The reconsideration request should include a cover letter entitled "Renewed Petition under 37 CFR 1.137(b)." This is **not** a final agency action within the meaning of 5 U.S.C. § 704.

The application became abandoned for failure to timely reply within the meaning of 37 CFR 1.113 to the final Office action, mailed 29 January 2007, which set a shortened statutory period for reply of three (3) months. An extension of time under the provisions of 37 CFR 1.136(a) was obtained. Accordingly, the application became abandoned on 30 July 2007.

A grantable petition under 37 CFR 1.137(b) must be accompanied by: (1) the required reply, unless previously filed; (2) the petition fee as set forth in 37 CFR 1.17(m); (3) a statement that the entire delay in filing the required reply from the due date for the reply until the filing of a grantable petition pursuant to 37 CFR 1.137(b) was unintentional; and (4) any terminal disclaimer (and fee as set forth in 37 CFR 1.20(d)) required by 37 CFR 1.137(d). Where there is a question as to whether either the abandonment or the delay in filing a petition under 37 CFR 1.137 was unintentional, the Director may require additional information. See MPEP 711.03(c)(II)(C) and (D). The instant petition lacks item(s) (1).

The proposed reply required for consideration of a petition to revive must be a Notice of Appeal (and appeal fee required by 37 CFR 41.20(b)(2)), an amendment that *prima facie* places the application in condition for allowance, a Request for Continued Examination (RCE) and submission (37 CFR 1.114), or the filing of a continuing application under 37 CFR 1.53(b). See MPEP 711.03(c)(III)(A)(2). Since the amendment submitted does not *prima facie* place the

application in condition for allowance, the reply required must be a Notice of Appeal (and appeal fee), RCE, or the filing of a continuing application under 37 CFR 1.53(b).

A courtesy copy of Advisory Action (PTOL-303) is attached.

Further correspondence with respect to this matter should be addressed as follows:

By Mail: Mail Stop PETITION
Commissioner for Patents
P. O. Box 1450
Alexandria, VA 22313-1450

By hand: U. S. Patent and Trademark Office
Customer Service Window, Mail Stop Petitions
Randolph Building
401 Dulany Street
Alexandria, VA 22314

The centralized facsimile number is **(571) 273-8300.**

Telephone inquiries concerning this decision should be directed to Allen C. Ho at (571) 272-6052.

David Bucci
Petitions Examiner
Office of Petitions

enc: Advisory Action Before the Filing of an Appeal Brief (PTOL-303)

Advisory Action Before the Filing of an Appeal Brief	Application No. 10/370,720	Applicant(s) GARCHA, MOHINDER SINGH	
	Examiner THU V. HUYNH	Art Unit 2178	

--The MAILING DATE of this communication appears on the cover sheet with the correspondence address --

THE REPLY FILED 31 December 2007 FAILS TO PLACE THIS APPLICATION IN CONDITION FOR ALLOWANCE.

1. ☒ The reply was filed after a final rejection, but prior to or on the same day as filing a Notice of Appeal. To avoid abandonment of this application, applicant must timely file one of the following replies: (1) an amendment, affidavit, or other evidence, which places the application in condition for allowance; (2) a Notice of Appeal (with appeal fee) in compliance with 37 CFR 41.31; or (3) a Request for Continued Examination (RCE) in compliance with 37 CFR 1.114. The reply must be filed within one of the following time periods:
   a) ☒ The period for reply expires 3 months from the mailing date of the final rejection.
   b) ☐ The period for reply expires on: (1) the mailing date of this Advisory Action, or (2) the date set forth in the final rejection, whichever is later. In no event, however, will the statutory period for reply expire later than SIX MONTHS from the mailing date of the final rejection.

   Examiner Note: If box 1 is checked, check either box (a) or (b). ONLY CHECK BOX (b) WHEN THE FIRST REPLY WAS FILED WITHIN TWO MONTHS OF THE FINAL REJECTION. See MPEP 706.07(f).

Extensions of time may be obtained under 37 CFR 1.136(a). The date on which the petition under 37 CFR 1.136(a) and the appropriate extension fee have been filed is the date for purposes of determining the period of extension and the corresponding amount of the fee. The appropriate extension fee under 37 CFR 1.17(a) is calculated from: (1) the expiration date of the shortened statutory period for reply originally set in the final Office action; or (2) as set forth in (b) above, if checked. Any reply received by the Office later than three months after the mailing date of the final rejection, even if timely filed, may reduce any earned patent term adjustment. See 37 CFR 1.704(b).

NOTICE OF APPEAL

2. ☐ The Notice of Appeal was filed on _____. A brief in compliance with 37 CFR 41.37 must be filed within two months of the date of filing the Notice of Appeal (37 CFR 41.37(a)), or any extension thereof (37 CFR 41.37(e)), to avoid dismissal of the appeal. Since a Notice of Appeal has been filed, any reply must be filed within the time period set forth in 37 CFR 41.37(a).

AMENDMENTS

3. ☒ The proposed amendment(s) filed after a final rejection, but prior to the date of filing a brief, will not be entered because
   (a) ☒ They raise new issues that would require further consideration and/or search (see NOTE below);
   (b) ☐ They raise the issue of new matter (see NOTE below);
   (c) ☒ They are not deemed to place the application in better form for appeal by materially reducing or simplifying the issues for appeal; and/or
   (d) ☐ They present additional claims without canceling a corresponding number of finally rejected claims.

   NOTE: *See Continuation Sheet*. (See 37 CFR 1.116 and 41.33(a)).
4. ☐ The amendments are not in compliance with 37 CFR 1.121. See attached Notice of Non-Compliant Amendment (PTOL-324).
5. ☐ Applicant's reply has overcome the following rejection(s): _____.
6. ☐ Newly proposed or amended claim(s) _____ would be allowable if submitted in a separate, timely filed amendment canceling the non-allowable claim(s).
7. ☒ For purposes of appeal, the proposed amendment(s): a) ☒ will not be entered, or b) ☐ will be entered and an explanation of how the new or amended claims would be rejected is provided below or appended.
   The status of the claim(s) is (or will be) as follows:
   Claim(s) allowed: _____.
   Claim(s) objected to: _____.
   Claim(s) rejected: *1-5*.
   Claim(s) withdrawn from consideration: _____.

AFFIDAVIT OR OTHER EVIDENCE

8. ☐ The affidavit or other evidence filed after a final action, but before or on the date of filing a Notice of Appeal will not be entered because applicant failed to provide a showing of good and sufficient reasons why the affidavit or other evidence is necessary and was not earlier presented. See 37 CFR 1.116(e).
9. ☐ The affidavit or other evidence filed after the date of filing a Notice of Appeal, but prior to the date of filing a brief, will not be entered because the affidavit or other evidence failed to overcome all rejections under appeal and/or appellant fails to provide a showing a good and sufficient reasons why it is necessary and was not earlier presented. See 37 CFR 41.33(d)(1).
10. ☐ The affidavit or other evidence is entered. An explanation of the status of the claims after entry is below or attached.

REQUEST FOR RECONSIDERATION/OTHER

11. ☐ The request for reconsideration has been considered but does NOT place the application in condition for allowance because: _____.
12. ☐ Note the attached Information *Disclosure Statement*(s). (PTO/SB/08) Paper No(s). _____
13. ☐ Other: _____.

/Thu Huynh/
Thu V. Huynh
02/11/08

Continuation of 3. NOTE: The added limitations to independent claims 1 and 5 would necessitate further search and/or consideration..

UNITED STATES PATENT AND TRADEMARK OFFICE

Commissioner for Patents
United States Patent and Trademark Office
P.O. Box 1450
Alexandria, VA 22313-1450
www.uspto.gov

Hanify & King, P.C.
1875 K Street
Suite 707
WASHINGTON DC 20006

COPY MAILED

AUG 0 1 2008

In re Application of :
Mohinder Singh **GARCHA** :
Application No. 10/370,720 : ON PETITION
Filed: February 24, 2003 :
Attorney Docket No. **19111.0107** :

This is a decision on the renewed petition under the provisions of 37 CFR 1.137(b), filed June 3, 2008, to revive the above-identified application.

The petition is **GRANTED**.

The application became abandoned for failure to timely reply within the meaning of 37 CFR 1.113 to the final Office action mailed January 29, 2007, which set a shortened statutory period for reply of three (3) months. A three (3) month extension of time under the provisions of 37 CFR 1.136(a) were obtained. Accordingly, the application became abandoned on July 30, 2007.

The petition satisfies the requirements of 37 CFR 1.137(b) in that the petitioner has supplied (1) the reply in the form of an amendment, a Request for Continued Examination and the $810 fee, (2) the petition fee of $1540, and (3) a proper statement of unintentional delay.

There is no indication that the person signing the petition was ever given a power of attorney to prosecute the application. If the person signing the petition desires to receive future correspondence regarding this application, the appropriate power of attorney documents must be submitted.

An extension of time under 37 CFR 1.136(a) must be filed prior to the expiration of the maximum extendable period for reply. See In re Application of S., 8 USPQ2d 1630, 1631 (Comm'r Pats. 1988). Since the $ 460 extension of time fee submitted with the petition on June 3, 2008 was subsequent to the maximum extendable period for reply, this fee is unnecessary and will be credited to petitioner's deposit account.

Telephone inquiries concerning this decision should be directed to Lori Baker Amerson at (571) 272-6052 or in her absence the undersigned at (571) 272-7099.

The application file is being referred to Technology Center AU 2178 for appropriate action by the Examiner.

Christopher Bottorff

for David Bucci
Petitions Examiner
Office of Petitions

UNITED STATES PATENT AND TRADEMARK OFFICE

Commissioner for Patents
United States Patent and Trademark Office
P.O. Box 1450
Alexandria, VA 22313-1450
www.uspto.gov

OIPE JC177
OCT 0 6 2004
TRADEMARK OFFICE

Paper No.

OBLON, SPIVAK, MCCLELLAND, MAIER & NEUSTADT
1940 DUKE STREET
ALEXANDRIA VA 22314

RECEIVED: 6/9/04
OBLON, SPIVAK, McCLELLAND
MAIER & NEUSTADT, P.C.
DOCKETING DEPT.
Initials/Date Docketed: 6/16/04
Type of Resp(s):
Due Date(s):

COPY MAILED

JUN 0 8 2004

OFFICE OF PETITIONS

ON PETITION

In re Application of
Masahiro Usuki et al
Application No. 10/370,744
Filed: February 24, 2003
Attorney Docket No. 234396USO

This is a decision on the petition, filed June 7, 2004, under 37 CFR 1.313(c)(2) to withdraw the above-identified application from issue after payment of the issue fee.

The petition is **GRANTED.**

The above-identified application is withdrawn from issue for consideration of a submission under 37 CFR 1.114 (request for continued examination). See 37 CFR 1.313(c)(2).

Petitioner is advised that the issue fee paid on November 21, 2003 in the above-identified application cannot be refunded. If, however, the above-identified application is again allowed, petitioner may request that it be applied towards the issue fee required by the new Notice of Allowance.[1]

Telephone inquiries should be directed to the undersigned at (703) 305-8859.

After receipt of the file in the Office of Petitions, the application will be forwarded to Technology Center AU 1713 for processing of the request for continued examination under 37 CFR 1.114.

Karen Creasy

Karen Creasy
Petitions Examiner
Office of Petitions
Office of the Deputy Commissioner
for Patent Examination Policy

---

[1] The request to apply the issue fee to the new Notice may be satisfied by completing and returning the new Issue Fee Transmittal Form PTOL-85(b), which includes the following language thereon: "Commissioner for Patents is requested to apply the Issue Fee and Publication Fee (if any) or re-apply any previously paid issue fee to the application identified above." Petitioner is advised that, whether a fee is indicated as being due or not, the Issue Fee Transmittal Form **must** be completed and timely submitted to avoid abandonment. Note the language in bold text on the first page of the Notice of Allowance and Fee(s) Due (PTOL-85).

SPE: Pe Vo

SPE RESPONSE FOR CERTIFICATE OF CORRECTION

Paper No.: _____

DATE : 8/17/06

TO SPE OF : ART UNIT 3729

SUBJECT : Request for Certificate of Correction for Appl. No.: 10/370,755 Patent No.: 7043830

Please respond to this request for a certificate of correction within 7 days.

Please review the requested changes/corrections as shown in the **COCIN** document(s) in the IFW application image. No new matter should be introduced, nor should the scope or meaning of the claims be changed.

Please complete the response (see below) and forward the completed response to scanning using document code **COCX**.

Lamonte M. Newsome
Certificates of Correction Branch
703-308-9390 ext. 112

Thank You For Your Assistance

The request for issuing the above-identified correction(s) is hereby:
Note your decision on the appropriate box.

- ☒ **Approved** — All changes apply.
- ☐ **Approved in Part** — Specify below which changes **do not** apply.
- ☐ **Denied** — State the reasons for denial below.

Comments: _____

PETER VO
SUPERVISORY PATENT EXAMINER
TECHNOLOGY CENTER 3700

SPE

3729
Art Unit

UNITED STATES PATENT AND TRADEMARK OFFICE

Commissioner for Patents
United States Patent and Trademark Office
P.O. Box 1450
Alexandria, VA 22313-1450
www.uspto.gov

LITMAN LAW OFFICES, LTD
PO BOX 15035
CRYSTAL CITY STATION
ARLINGTON, VA 22215

COPY MAILED

JAN 2 6 2006

OFFICE OF PETITIONS

In re Application of

Stephen W. Shockley

Application No. 10/370,756

Filed: February 24, 2003

Attorney Docket No. 20311.00

DECISION ON PETITION

This is a decision on the petition under 37 CFR 1.181(a) to withdraw the holding of abandonment, filed December 27, 2005.

The petition under 37 CFR 1.181(a) to withdraw the holding of abandonment is **granted**.

This application was held abandoned on November 15, 2004, after it was believed that no response was received to the Notice of Non-Compliant Amendment mailed October 14, 2004. The notice allowed a period for reply of one (1) month from its mailing date. Extensions of the time set for reply were available pursuant to 37 CFR 1.136(a). A Notice of Abandonment was mailed on June 30, 2005, indicating that a reply to the notice was not received.

A review of the record did not reveal an amendment intending to be responsive to the Notice of Non-Compliant Amendment, however; an Office date-stamped postcard whereby the Office acknowledged receiving an amendment on November 15, 2005 accompanies the instant petition. Based on the aforementioned, it appears that the application was improperly held abandoned as a response was received prior to expiration of the period for reply. The holding of abandonment is withdrawn, accordingly.

Further inquires regarding this decision may be directed to the undersigned at (571) 272-3222.

The application file is being forwarded Technology Center 2600, GAU 2636, for further processing.

Kenya A. McLaughlin

Kenya A. McLaughlin
Petitions Attorney
Office of Petitions

UNITED STATES PATENT AND TRADEMARK OFFICE

Commissioner for Patents
United States Patent and Trademark Office
P.O. Box 1450
Alexandria, VA 22313-1450
www.uspto.gov

MATTINGLY, STANGER, MALUR & BRUNDIDGE, P.C.
1800 DIAGONAL ROAD
SUITE 370
ALEXANDRIA VA 22314

MAIL

AUG 1 9 2005

DIRECTOR OFFICE
TECHNOLOGY CENTER 2100

In re Application of: AOSHIMA, T. et al.
Application No. 10/370,770
Filed: February 24, 2003
For: STORAGE MANAGEMENT METHOD

DECISION ON PETITION FOR ACCELERATED EXAMINATION UNDER M.P.E.P.§708.02(VIII)

This is a decision on the petition filed July 14, 2005 under 37 C.F.R. 102(d) and M.P.E.P. § 708.02(VIII): Accelerated Examination, to make the above-identified application special.

The Petition is **GRANTED**.

M.P.E.P. § 708.02, Section VIII which sets out the prerequisites for a grantable petition for Accelerated Examination under 37 C.F.R. § 102(d) states in relevant part:

> A new application (one which has not received any examination by the examiner) may be granted special status provided that applicant (and this term includes applicant's attorney or agent) complies with each of the following items:
>
> (a) Submits a petition to make special accompanied by the fee set forth in 37 CFR 1.17(h);
>
> (b) Presents all claims directed to a single invention, or if the Office determines that all the claims presented are not obviously directed to a single invention, will make an election without traverse as a prerequisite to the grant of special status;
>
> (c) Submits a statement(s) that a pre-examination search was made, listing the field of search by class and subclass, publication, Chemical Abstracts, foreign patents, etc. The pre-examination search must be directed to the invention as claimed in the application for which special status is requested. A search made by a foreign patent office satisfies this requirement;
>
> (d) Submits one copy each of the references deemed most closely related to the subject matter encompassed by the claims if said references are not already of record; and

(e) Submits a detailed discussion of the references, which discussion points out, with the particularity required by 37 CFR 1.111 (b) and (c), how the claimed subject matter is patentable over the references.

Applicant's submission of July 14, 2005 meets all the criteria set out above. Accordingly, the petition is **GRANTED**.

The application file is being forwarded to the Examiner for accelerated examination in accordance with the procedures set forth in M.P.E.P. §708.02, Section VIII. If the application is subsequently allowed, it will be given priority for printing. See M.P.E.P. §1309.

Vincent N. Trans
Special Program Examiner
Technology Center 2100
Computer Architecture, Software and Information Security
571-272-3613

RP

UNITED STATES PATENT AND TRADEMARK OFFICE

Commissioner for Patents
United States Patent and Trademark Office
P.O. Box 1450
Alexandria, VA 22313-1450
www.uspto.gov

Staas & Halsey LLP
1201 New York Avenue, N.W.
Suite 700
Washington, DC 20005

JUL 17 2009

In re Application of	:	
Kenji Nakamura	:	DECISION ON PETITION
Application No. 10/370,780	:	UNDER 37 C.F.R. 1.181 TO
Filed: February 24, 2003	:	WITHDRAW FINALITY
For: SYSTEM AND METHOD FOR DETERMINING	:	
AN ADVERTISEMENT PROVISION DESTINATION	:	

This is in response to applicant's Petition filed on March 1, 2007, requesting withdrawal of the finality of the Office action mailed December 1, 2006 as being premature. The delay in treating this petition is sincerely regretted.

The petition is **DISMISSED AS MOOT.**

Petitioner alleges that the final rejection dated December 1, 2006 was "incomplete since the Examiner has not provided support for the rejection therein and has not responded to all of Applicant's arguments traversing the rejections in the previous Amendment."

A review of the record indicates that, subsequent to the instant petition, applicant filed a Request for Continued Examination (RCE) on March 26, 2007, which effectively withdrew the issue of finality, and making the petition moot. Further review of the record indicates that the examiner issued a restriction requirement on June 13, 2007, applicant responded with an election on July 12, 2007, the examiner issued a non-final rejection on October 4, 2007, applicant responded with an amendment on January 4, 2008, the examiner issued a Final rejection on April 10, 2008, applicant responded with an after final amendment on July 10, 2008, the examiner issued an advisory action on July 25, 2008, and the application has since been abandoned as of January 15, 2009.

Summary: ***Petition Dismissed as Moot***

Wynn W. Coggins, Director
Patent Technology Center 3600
571-272-5350

EWS/snm: 7/13/09

SM

UNITED STATES PATENT AND TRADEMARK OFFICE

Commissioner for Patents
United States Patent and Trademark Office
P.O. Box 1450
Alexandria, VA 22313-1450
www.uspto.gov

Choate, Hall & Stewart LLP
Two International Place
Boston, MA 02110

COPY MAILED
JAN 2 4 2006
OFFICE OF PETITIONS

In re Application of
Oettinger et al.
Application No. 10/370,783
Filed: February 20, 2003
Attorney Docket No. INS-00101(2003627-0004)

DECISION ON PETITION

This is a decision on the petition under 37 CFR 1.137(f), filed December 2, 2005, which is being treated as a petition under 37 CFR 1.137(b) to revive the present nonprovisional application for failure to timely notify the U.S. Patent and Trademark (USPTO) of the filing of an application in a foreign country, or under a multinational treaty that requires publication of applications eighteen months after filing. *See* 37 CFR 1.137(f).

The petition is **GRANTED**.

Petitioner states that a PCT application was filed on April 27, 2004; however, the USPTO was unintentionally not notified of this filing within forty-five days subsequent to the filing of the subject application. Accordingly, this application became abandoned pursuant to 35 U.S.C. 122(b)(2)(B)(iii) and 37 CFR 1.213(c) for failure to timely notify the Office of the filing of an application in a foreign country or under a multilateral international agreement that requires publication of applications eighteen months after filing.

A petition to revive an application abandoned pursuant to 35 U.S.C. 122(b)(2)(B)(iii) for failure to notify the USPTO of a foreign filing must be accompanied by:

(1) the required reply, which is met by the notification of such filing in a foreign country or under a multinational treaty;

(2) the petition fee as set forth in 37 CFR 1.17(m); and

(3) a statement that the entire delay in filing the required reply from the due date of the reply until the filing of a grantable petition was unintentional.

The present petition has been found to be in compliance with 37 CFR 1.137(b). Accordingly, the failure to timely notify the USPTO of a foreign or international filing within forty-five days after the date of filing of such foreign or international application as provided by 35 U.S.C. 122(b)(2)(B)(iii) and 37 CFR 1.213(c) is accepted as having been unintentionally delayed.

The previous Request and Certification under 35 U.S.C. 122(b)(2)(B)(i) has been rescinded. A Communication Regarding Rescission of Nonpublication Request and/or Notice of Foreign Filing, which sets forth the projected publication date of May 4, 2006, accompanies this decision on petition.

This matter is being referred to Technology Center Art Unit 2882.

Any inquiries concerning this decision may be directed to the undersigned at (571) 272-3211.

Christina Tartera Donnell

Christina Tartera Donnell
Senior Petitions Attorney
Office of Petitions

Enclosure: Communication Regarding Rescission of Nonpublication Request and/or Notice of Foreign Filing

UNITED STATES PATENT AND TRADEMARK OFFICE

COMMISSIONER FOR PATENT
UNITED STATES PATENT AND TRADEMARK OFFIC
P.O. BOX 1450
ALEXANDRIA, VA 22313-1450
www.uspto.go

Paper No. 6

Bruce Garlick (For Patent Owner)
GARLICK HARRISON & MARKISON LLP
P.O. BOX 160727
Austin, TX 78716-0727

Todd P. Blakely (For Requester)
SHERIDAN ROSS PC
Suite 1200
1560 Broadway
Denver, CO 80202-5141

MAILED
AUG 28 2003
REEXAM UNIT

In re reissue application of
Leung, et al.,
Application No. 10/370,794
Filed: February 21, 2003
For: U.S. Patent No. 6,195,546

In re Leung, et al.,
Reexamination Proceeding
Control No. 90/006,577
Filed: March 25, 2003
For: U.S. Patent No. 6,195,546

DECISION *SUA SPONTE* MERGING REEXAMINATION AND REISSUE PROCEEDINGS

The above-identified reissue application and reexamination proceeding are before the Office of Patent Legal Administration for consideration of whether the proceedings should be merged at this time.

REVIEW OF FACTS

1. U.S. Patent No. 6,195,546 issued to Leung, et al., on February 27, 2001.

2. Patent owner filed a reissue application based on the '546 patent, on February 21, 2003, which was assigned Application No. 10/370,794. Claims 7-8 were amended.

3. A request for reexamination of the '546 patent was filed by a third party requester on March 25, 2003, and the resulting reexamination proceeding was assigned Control No. 90/006,577.

4. On May 1, 2003, reexamination was ordered in the '6577 proceeding.

5. Notice of the filing of the reissue application was published in the *Official Gazette* on May 27, 2003.

DISCUSSION REGARDING MERGER

Under 37 C.F.R. § 1.565(d):

> (d) If a reissue application and a reexamination proceeding on which an order pursuant to § 1.525 has been mailed are pending concurrently on a patent, a decision will normally be made to merge the two proceedings or to stay one of the two proceedings....

As evidenced by the above review of facts, the reissue application and the reexamination proceeding are currently pending. Since the Order has been mailed pursuant to § 1.525 in the '6577 reexamination proceeding, a decision under § 1.565(d) is timely.

The general policy of the Office is that examination of reissue and reexamination proceedings will not be conducted separately

and at the same time for a single patent. The reason for this policy is to prevent inconsistent, and possibly conflicting, amendments from being introduced into the multiple proceedings on behalf of the patent owner. Normally, the proceedings will be merged when it is desirable to do so in the interest of expediting the prosecution of all of the proceedings. In making a decision on whether or not to merge the multiple proceedings, consideration will be given to the status of each proceeding. See MPEP 2285.

A review of the prosecution history of the '6577 reexamination file shows that no amendments were made in the reexamination file.

A review of the reissue (Application No. 10/370,794) prosecution history shows that the reissue application was published in the *Official Gazette* on May 27, 2003. In the reissue application, patent owner has amended claims 7-8. Therefore, the claims are **not** identical in both proceedings. In order to provide efficient and prompt handling of both proceedings, and to prevent inconsistent and possibly conflicting amendments from being introduced on behalf of the patent owner, it is appropriate that the reissue and the reexamination proceedings be merged and a joint examination be conducted. Accordingly, the examination of the reissue application and the reexamination proceeding will be conducted in accordance with the decision set forth below.

DECISION MERGING THE REISSUE AND REEXAMINATION PROCEEDINGS

I. Merger of Proceedings

The above-identified reissue and reexamination proceedings are merged. A joint examination will be conducted in accordance with the guidelines and requirements which follow.

II. Requirement for Same Amendments in Both Proceedings

The patent owner is required to maintain identical amendments in the reissue application and the reexamination file for purposes of the merged proceeding. The maintenance of identical amendments in both files is required as long as the proceedings

remain merged. See 37 C.F.R. § 1.565(d). As noted above with regard to the amendments submitted, the claims are NOT the same in both files. **An appropriate housekeeping amendment is required within ONE (1) MONTH of this decision placing the same amendments in both cases**, specifically, Application No. 10/370,794, and Control Number 90/006,577. The response to the requirement must be limited to placing the same amendments in both cases, and patent owner must **not** address the issues of either of the proceedings in the housekeeping amendment. The housekeeping amendment should be submitted as a single paper, including the identifying data for both files (*i.e*, the reissue Application No. and the reexamination proceeding Control No.) and a signature, and should be filed in duplicate for entry into each of the reissue and reexamination files. **The amendment must be in compliance with 37 C.F.R. § 1.173.** Note that a "clean copy" of the amendment is **not** required by this rule. **Note that amendment practice pursuant to 37 C.F.R. § 1.121 does not apply to reissue applications, as specifically indicated in 37 C.F.R. § 1.121(a) and (h).**

III. Conduct of the Merged Reissue and Reexamination Proceedings

Because the statutory provisions for reissue application examination include, *inter alia*, provisions equivalent to 35 U.S.C. § 305 relating to the conduct of reexamination proceedings, the merged examination will be conducted on the basis of the rules relating to the broader, reissue application, examination. The examiner will apply the reissue statute, rules, and case law to the merged proceeding.

Each Office action issued by the examiner will take the form of a *single action* which jointly applies to the reissue application and the reexamination proceeding. Each action will contain identifying data *for both of the cases*, i.e, the reissue application and the reexamination proceeding. Each action will be physically entered into both files (which will be maintained as separate files).

Any response by the applicant/patent owner must consist of a single response, with **two copies being filed** for entry in both files, with each of the two copies bearing a signature, and containing identifying data for both of the cases (*i.e*, the reissue Application No. and the reexamination proceeding Control No.).

If the reissue application ultimately matures into a reissue patent, the reexamination proceeding shall be terminated by the grant of the reissue patent, and the reissue patent will serve as the certificate under 37 C.F.R. § 1.570. See MPEP 2285.

If the applicant/patent owner fails to file a timely and appropriate response to any Office action, the merged proceeding will be terminated as follows. The reissue application will be held abandoned, and the merger will be dissolved. With respect to the reexamination proceeding, the Commissioner will proceed to issue a reexamination certificate under § 1.570 in accordance with the last action of the Office, unless further action is clearly needed as a result of the difference in rules relating to reexamination and reissue proceedings.

If the applicant/patent owner files an express abandonment of the reissue application pursuant to 37 C.F.R. § 1.138, the next Office action of the examiner will accept the express abandonment, dissolve the merged proceeding, and continue examination as to the reexamination proceeding. Any grounds of rejection which are not applicable under reexamination would be withdrawn (*e.g.*, based on public use or sale), and any new grounds of rejection which are applicable under reexamination (*e.g.*, improperly broadened claims) would be made by the examiner upon dissolution of the merged proceeding. The existence of any questions/issues remaining which cannot be considered under reexamination following the dissolution would be noted by the examiner as not being proper under reexamination pursuant to 37 C.F.R. § 1.552(c).

CONCLUSION

1. The above-identified reissue application and reexamination proceeding **ARE MERGED** into a single consolidated proceeding.

2. The reissue application file and the reexamination file are being forwarded to the Group Director of Technology Center 2600. All further examination should be conducted in accordance with this decision.

3. Pursuant to Part II of this decision, a housekeeping amendment is required **within ONE (1) MONTH of this decision**, placing the same amendments in both cases of the present merged proceeding.

4. The examiner should issue an Office action for the present merged proceeding of the reissue application and reexamination proceeding **after** the earlier of:

   (a) the submission of the housekeeping amendment to place the same amendments in both cases

   (b) the expiration of the ONE (1) month period from the mailing of this decision for filing the amendment.

5. It should be noted that failure to submit an appropriate "housekeeping amendment" **within <u>one month</u> of this decision** placing the same amendments in both files will result in the Office's rejection of any claim that does not contain identical text in both merged proceedings under 35 U.S.C. § 112, second paragraph, as being indefinite as to the content of the claim, and therefore failing to particularly point out the invention.

6. All further examination should be conducted in accordance with Parts II and III of this decision.

7. Telephone inquiries related to this decision should be directed to the undersigned at (703) 308-0255.

Lynn M. Kryza
Patent Special Projects Advisor
Office of Patent Legal Administration

August 18, 2003

UNITED STATES DEPARTMENT OF COMMERCE
Patent and Trademark Office

Address: COMMISSIONER OF PATENTS AND TRADEMARKS
Washington, D.C. 20231

SERIAL NUMBER	FILING DATE	FIRST NAMED APPLICANT	ATTORNEY DOCKET NO
10/370,794	02/21/2003	Leung, Yau-Fan	

PATENT NUMBER	DATE OF THIS NOTICE	PAPER NUMBER
6 195 546	08/28/2003	7

NOTICE OF MERGED REEXAM - REISSUE PROCEEDING

This reissue application has been merged with the reexamination proceeding listed below:

Control No. 90/ 006577 Filing Date: 03/25/2003

Requester (name, address)
Todd P. Blakely
SHERIDAN ROSS PC
1560 Broadway Suite 1200
Denver CO 80202-5141

The front face of the reissue patent will include the following paragraph:

REEXAMINATION RESULTS

The questions raised in reexamination request No. 90/ 006577, filed 03/25/2003, have been considered and the results thereof are reflected in this reissue patent which constitutes the reexamination certificate required by 35 U.S.C. 307 as provided in 37 CFR 1.570(e).

FORM PTO 1527
(3 84)

UNITED STATES PATENT AND TRADEMARK OFFICE

Commissioner for Patents
United States Patent and Trademark Office
P.O. Box 1450
Alexandria, VA 22313-1450
www.uspto.gov

MERCHANT & GOULD PC
P.O. BOX 2903
MINNEAPOLIS, MN 55402-0903

COPY MAILED

APR 18 2007

OFFICE OF PETITIONS

In re Application of

GUTZMANN, Timothy et al.
Application No. 10/370,798
Filed: February 20, 2003
Attorney Docket No. **163.1239USC2**

DECISION ON PETITION
TO WITHDRAW
FROM RECORD

This is a decision on the Request to Withdraw as attorney or agent of record under 37 C.F.R. § 1.36(b), filed January 22, 2007.

The request is **NOT APPROVED** as moot.

A review of the file record indicates that the power of attorney to Merchant and Gould PC has been revoked by the assignee of the patent application on April 05, 2007. Accordingly, the request to withdraw under 37 C.F.R. § 1.36(b) is moot.

All future communications from the Office will continue to be directed to the below-listed address until otherwise notified by applicant.

Telephone inquires concerning this decision should be directed to Michelle R. Eason at 571-272-4231.

Terri Williams
Petitions Examiner
Office of Petitions

cc: **MORRISON & FOERSTER LLP**
12531 HIGH BLUFF DRIVE
SUITE 100
SAN DIEGO CA 92130-2040

cc: **SARAH MONFELDT**
United States Patent & Trademark Office
P.O. Box 1450
Alexandria, VA 22313-145

UNITED STATES PATENT AND TRADEMARK OFFICE

UNITED STATES DEPARTMENT OF COMMERCE
United States Patent and Trademark Office
Address: COMMISSIONER FOR PATENTS
P.O. Box 1450
Alexandria, Virginia 22313-1450
www.uspto.gov

APPLICATION NUMBER	FILING OR 371 (c) DATE	FIRST NAMED APPLICANT	ATTY. DOCKET NO./TITLE
10/370,798	02/20/2003	Timothy A. Gutzmann	163.1239USC2

CONFIRMATION NO. 9859

OC000000023370035

25225
MORRISON & FOERSTER LLP
12531 HIGH BLUFF DRIVE
SUITE 100
SAN DIEGO, CA 92130-2040

Date Mailed: 04/13/2007

NOTICE OF ACCEPTANCE OF POWER OF ATTORNEY

This is in response to the Power of Attorney filed 04/05/2007.

The Power of Attorney in this application is accepted. Correspondence in this application will be mailed to the above address as provided by 37 CFR 1.33.

Michelle R. Eason

Office of Initial Patent Examination (571) 272-4000, or 1-800-PTO-9199

ATTORNEY/APPLICANT COPY

UNITED STATES PATENT AND TRADEMARK OFFICE

UNITED STATES DEPARTMENT OF COMMERCE
United States Patent and Trademark Office
Address: COMMISSIONER FOR PATENTS
P.O. Box 1450
Alexandria, Virginia 22313-1450
www.uspto.gov

APPLICATION NUMBER	FILING OR 371 (c) DATE	FIRST NAMED APPLICANT	ATTY. DOCKET NO./TITLE
10/370,798	02/20/2003	Timothy A. Gutzmann	163.1239USC2

CONFIRMATION NO. 9859

OC000000023369989

23552
MERCHANT & GOULD PC
P.O. BOX 2903
MINNEAPOLIS, MN 55402-0903

Date Mailed: 04/13/2007

NOTICE REGARDING CHANGE OF POWER OF ATTORNEY

This is in response to the Power of Attorney filed 04/05/2007.

- The Power of Attorney to you in this application has been revoked by the assignee who has intervened as provided by 37 CFR 3.71. Future correspondence will be mailed to the new address of record(37 CFR 1.33).

Michelle R. Eason

Office of Initial Patent Examination (571) 272-4000, or 1-800-PTO-9199

FORMER ATTORNEY/AGENT COPY

UNITED STATES PATENT AND TRADEMARK OFFICE

Commissioner for Patents
United States Patent and Trademark Office
P.O. Box 1450
Alexandria, VA 22313-1450
www.uspto.gov

Paper No.7

TOWNSEND AND TOWNSEND AND CREW, LLP
TWO EMBARCADERO CENTER
EIGHTH FLOOR
SAN FRANCISCO CA 94111-3834

COPY MAILED

JUL 2 1 2004

OFFICE OF PETITIONS

In re Application of
Tada et al..
Application No. 10/370,829
Filed: February 21, 2003
Attorney Docket No. 16869N-073700US

: ON PETITION

This is a decision on the petition filed July 14, 2003, requesting under 37 CFR 1.183 that the USPTO waive the rules and accept the drawings as filed. The delay in treating the petition is sincerely regretted.

The petition is **granted.**

Petitioners assert that as the invention relates to a multilingual document retrieval system, the drawings accurately illustrate the invention if the drawings continue to therein contain both Japanese and English fonts. It is agreed that justice would be served by waiver of the requirement that the drawings be limited to English characters. The request for refund of the petition fee cannot be favorably treated, as by the terms of the rule, the fee falls due upon filing the petition. This decision does not relieve applicants of the requirement of supplying clear, legible drawings that are capable of reproduction, regardless of the font.

This application is being returned to the Office of initial Patent Examination (OIPE) for further processing of the reply filed July 14, 2003

Telephone inquires related to this decision should be directed to the undersigned at (703) 305-1820. Inquiries as to OIPE processing should be addressed to the OIPE hotline at (703) 308-1202.

Brian Hearn
Petitions Examiner
Office of Petitions
Office of the Deputy Commissioner for
Patent Examination Policy

UNITED STATES PATENT AND TRADEMARK OFFICE

Commissioner for Patents
United States Patent and Trademark Office
P.O. Box 1450
Alexandria, VA 22313-1450
www.uspto.gov

MEDTRONIC MINIMED INC.
18000 DEVONSHIRE STREET
NORTHRIDGE CA 91325-1219

COPY MAILED

DEC 2 1 2005

OFFICE OF PETITIONS

In re Application of
Jason H. Safabash et al.
Application No. 10/370,831
Filed: February 21, 2003
Attorney Docket No. PF00313 Con

: DECISION ON PETITION
: UNDER 37 CFR 1.78(a)(3)

This is a decision on the petition under 37 CFR 1.78(a)(3), filed October 10, 2005, to accept an unintentionally delayed claim under 35 U.S.C. 120 for the benefit of priority to the prior-filed nonprovisional application set forth in the amendment filed with the petition.

The petition is **GRANTED**.

A petition for acceptance of a claim for late priority under 37 CFR 1.78(a)(3) is only applicable to those applications filed on or after November 29, 2000. Further, the petition is appropriate only after the expiration of the period specified in 37 CFR 1.78(a)(2)(ii). In addition, the petition under 37 CFR 1.78(a)(3) must be accompanied by:

(1) the reference required by 35 U.S.C.120 and 37 CFR 1.78(a)(2)(i) of the prior-filed application, unless previously submitted;
(2) the surcharge set forth in 1.17(t); and
(3) a statement that the entire delay between the date the claim was due under 37 CFR 1.78(a)(2)(ii) and the date the claim was filed was unintentional. The Commissioner may require additional information where there is a question whether the delay was unintentional.

All the above requirements having been satisfied, the late claim for priority under 35 U.S.C. 120 is accepted as being unintentionally delayed.

The granting of the petition to accept the delayed benefit claim to the prior-filed application under 37 CFR 1.78(a)(3) should not be construed as meaning that this application is entitled to the benefit of the prior-filed application. In order for this application to be entitled to the benefit of the prior-filed application, all other requirements under 35 U.S.C. 120 and 37 CFR 1.78(a)(1) and (a)(2) must be met.

Similarly, the fact that the corrected Filing Receipt accompanying this decision on petition includes the prior-filed application should not be construed as meaning that applicant is entitled to the claim for benefit of priority to the prior-filed application noted thereon. Accordingly, the examiner will, in due course, consider this benefit claim and determine whether the application is entitled to the benefit of the earlier filing date.

A corrected Filing Receipt, which includes the priority claim to the prior-filed nonprovisional application, accompanies this decision on petition.

Any inquiries concerning this decision may be directed to Senior Petitions Attorney Patricia Faison-Ball at (571) 272-3212. All other inquiries concerning either the examination procedures or status of the application should be directed to the Technology Center.

This application is being forwarded to Technology Center Art Unit 3767 for appropriate action on the amendment filed October 10, 2005, including consideration by the examiner of applicant's entitlement to claim benefit of priority under 35 U.S.C. 120 to the prior-filed application.

Frances Hicks

Frances Hicks
Petitions Examiner
Office of Petitions

ATTACHMENT: Corrected Filing Receipt

UNITED STATES PATENT AND TRADEMARK OFFICE

Commissioner for Patents
United States Patent and Trademark Office
P.O. Box 1450
Alexandria, VA 22313-1450
www.uspto.gov

COPY MAILED

AUG 3 1 2005

OFFICE OF PETITIONS

Rupert B. Hurley Jr.
Cryovac, Inc.
P.O. Box 464
Duncan, SC 29334

In re Application of :
Ahlgren, et al. :
Application No. 10/370,834 : ON PETITION
Filed: February 21, 2003 :
Attorney Docket No. D-41939-11 :

This is in response to the petition under 37 CFR 1.182, filed June 24, 2005, to withdraw a terminal disclaimer filed August 12, 2004.

The petition is granted.

Examiner Tarazano has determined that the terminal disclaimer filed August 12, 2004, can be withdrawn as the terminal disclaimer referenced an incorrect application serial number. The terminal disclaimer is withdrawn, accordingly.

Petitioner is advised that the fee for petition under 37 CFR 1.182 is authorized under 37 CFR 1.17(f). The fee for the instant petition is, therefore, $400.00. Deposit account 07-1765 will be charged an additional $270.00, accordingly.

Telephone inquiries concerning this decision may be directed to the undersigned at (571) 272-3222.

Kenya A. McLaughlin
Petitions Attorney
Office of Petitions

UNITED STATES PATENT AND TRADEMARK OFFICE

Pet. Dec.

Commissioner for Patents
United States Patent and Trademark Office
P.O. Box 1450
Alexandria, VA 22313-1450
www.uspto.gov

JUL 1 4 2005

td

In re application of :
James F. Morris et al. : DECISION ON
Serial No. 10/370,838 : PETITION
Filed: February 21, 2003 :
For: METHOD OF MAKING AND USING A FILTER IN THE FORM OF A BLOCK OF AGGLOMERATED COPOLYMER FRAGMENTS

This is a decision on the PETITION UNDER 37 CFR 1.144 TO WITHDRAW THE RESTRICTION REQUIREMENT mailed November 23, 2004 and made final in the office action mailed March 17, 2005.

On November 23, 2004, a three-way restriction requirement was made by the examiner. The group of claims as set forth in the requirement were directed to a method for making a filter, a filter and a method of filtering. Applicants traversed the restriction requirement in a response filed December 28, 2004 by stating that the reasons supplied by the examiner to show distinctness of the groups was improper. The examiner prepared an office action based on the elected group and made the restriction requirement final. This office action was mailed March 17, 2005.

On April 4, 2005, the instant petition under 37 CFR 1.144 was timely filed to formally request the withdrawal of the restriction requirement.

Applicant's position for the withdrawal of the restriction requirement is that the examiner has not shown that the separate groups are distinct.

DECISION

Sections 803 and 806.05(i) of the MPEP states:

803 Restriction - When Proper
Under the statute an application may properly be required to be restricted to one of two or more claimed inventions only if they are able to support separate pat-ents and they are either independent (MPEP § 806.04 - § 806.04(i)) or distinct (MPEP § 806.05 - §806.05(i)).

If the search and examination of an entire application can be made without serious burden, the examiner must examine it on the merits, even though it includes claims to independent or distinct inventions.

806.05(i) Product, Process of Making, and Process of Using — Product Claim Not Allowable

37 CFR 1.141. Different inventions in one national application.
(b) Where claims to all three categories, product, process of making, and process of use, are included in a national application, a three way requirement for restriction can only be made where the process of making is distinct from the product. If the process of making and the product are not distinct, the process of using may be joined with the claims directed to the product and the process of making the product even though a showing of distinctness between the product and process of using the product can be made.

In the March 17, 2005 office action, the examiner states that the claims directed to the filter and the claims directed to the method of making the filter are distinct because the product can be made by applying a gaseous or liquid solvent to the fragments which would therefore not require the heat of the claims.

Petitioner argues that such an alternative process would not result in the instantly claimed product and therefore, the groups of claims are not distinct. A declaration has been supplied by Petitioner to support this position. Notwithstanding the declaration submitted and irregardless of whether the instantly claimed filter can be made by a solvent process as proposed by the examiner, it is noted that the instant method claims would not exclude such a solvent process. The claims use "comprising" language and therefore are open to additional steps including a solvent treatment. The examiner has not met the burden of showing distinctness between the product and method of making.

Accordingly, because the examiner has not shown distinctness between the product claims and the method of making claims, the three way restriction as set forth by the examiner is improper and the petition is **GRANTED.**

The application is being forwarded to the examiner to prepare a new non-final office action which includes examination and action on the merits of the claims previously withdrawn from consideration due to the restriction requirement. Because Applicants have submitted an amendment in response to the office action mailed March 17, 2005, the non-final office action should also address said response.

Jacqueline M. Stone, Director
Technology Center 1700
Chemical and Materials Engineering

LOUIS J. HOFFMAN, P.C.
14614 NORTH KIERLAND BOULEVARD, SUITE 300
SCOTTSDALE AZ 85254

UNITED STATES PATENT AND TRADEMARK OFFICE

Commissioner for Patents
United States Patent and Trademark Office
P.O. Box 1450
Alexandria, VA 22313-1450
www.uspto.gov

ERICSSON INC.
6300 LEGACY DRIVE
M/C EVR 1-C-11
PLANO, TX 75024

COPY MAILED
JUL 18 2008

In re Application of	:	
Roger KALDEN, et al	:	
Application No. 10/370,861	:	DECISION ON PETITION
Filed: February 21, 2003	:	
Attorney Docket No. P14208-US1	:	

This is a decision on the petition under the unintentional provisions of 37 CFR 1.137(b), filed May 12, 2008, to revive the above-identified design application.

The petition is **GRANTED**.

The application became abandoned for failure to timely pay the issue and publication fees on or before February 21, 2008, as required by the Notice of Allowance and Fee(s) Due, mailed November 21, 2007, which set a statutory period for reply of three (3) months. Accordingly, the application became abandoned on February 22, 2008.

The petition satisfies the requirements of 37 CFR 1.137(b) in that petitioner has supplied (1) the reply in the form of payment of the issue fee of $1440 and the publication fee of $300; (2) the petition fee of 1540; and (3) a proper statement of unintentional delay.

Telephone inquiries concerning this decision should be directed to Diane Goodwyn at (571)272-6735.

This application is being referred to the Office of Data Management for processing into a patent.

Thurman K. Page

Thurman Page
Petitions Examiner
Office of Petitions

UNITED STATES PATENT AND TRADEMARK OFFICE

Commissioner for Patents
United States Patent and Trademark Office
P.O. Box 1450
Alexandria, VA 22313-1450
www.uspto.gov

MAILED

NOV 19 2004

Technology Center 2100

STEVE Y. CHO
TOWNSEND AND TOWNSEND AND CREW LLP
TWO EMBARCADERO CENTER, 8th FLOOR
SAN FRANCISCO, CALIFORNIA 94111-3834

In re Application of: Suzuki, et al. Application No. 10/370,865 Filed: February 19, 2003 For: DATA STORAGE DEVICE MANAGEMENT SYSTEM	DECISION ON PETITION FOR ACCELERATED EXAMINATION UNDER M.P.E.P.§708.02(VIII)

This is a decision on the petition filed August 3, 2004 under 37 C.F.R. 102(d) and M.P.E.P. § 708.02(VIII): Accelerated Examination, to make the above-identified application special.

The Petition is **GRANTED**.

M.P.E.P. § 708.02, Section VIII which sets out the prerequisites for a grantable petition for Accelerated Examination under 37 C.F.R. § 102(d) states in relevant part:

A new application (one which has not received any examination by the examiner) may be granted special status provided that applicant (and this term includes applicant's attorney or agent) complies with each of the following items:

(a) Submits a petition to make special accompanied by the fee set forth in **37 CFR 1.17(h)**;

(b) Presents all claims directed to a single invention, or if the Office determines that all the claims presented are not obviously directed to a single invention, will make an election without traverse as a prerequisite to the grant of special status;

(c) Submits a statement(s) that a pre-examination search was made, listing the field of search by class and subclass, publication, Chemical Abstracts, foreign patents, etc. The pre-examination search must be directed to the invention as claimed in the application for which special status is requested. A search made by a foreign patent office satisfies this requirement;

(d) Submits one copy each of the references deemed most closely related to the subject matter encompassed by the claims if said references are not already of record; and

(e) Submits a detailed discussion of the references, which discussion points out, with the particularity required by 37 CFR 1.111 (b) and (c), how the claimed subject matter is patentable over the references.

Petition to Make Special **GRANTED** since all of the requirements for special status under MPEP § 708.02(VIII) have been met.

The application file is being forwarded to the Examiner for accelerated examination in accordance with the procedures set forth in M.P.E.P. §708.02, Section VIII. If the application is subsequently allowed, it will be given priority for printing. See M.P.E.P. §1309.

Brian L. Johnson
Special Program Examiner
Technology Center 2100
Computer Architecture, Software and Information Security
571-272-3595

MS/11/17/04

UNITED STATES PATENT AND TRADEMARK OFFICE

Commissioner for Patents
United States Patent and Trademark Office
P.O. Box 1450
Alexandria, VA 22313-1450
www.uspto.gov

DENISE M GLASSMEYER
YOUNG & BASILE, P.C.
3001 W. BIG BEAVER RD., SUITE 624
TROY MI 48084-2813

COPY MAILED

JUN 0 5 2006

OFFICE OF PETITIONS

In re Application of	:	
Robarge, Jerry	:	DECISION ON PETITION
Application No. 10/370,879	:	TO WITHDRAW
Filed: February 20, 2003	:	FROM RECORD
Attorney Docket No. ROJ100A	:	

This is a decision on the Request to Withdraw as attorney or agent of record under 37 C.F.R. § 1.36(b), filed March 9, 2006.

The request is **APPROVED**.

A grantable request to withdraw as attorney/agent of record must be signed by every attorney/agent seeking to withdraw or contain a clear indication that one attorney is signing on behalf of another/others. A request to withdraw will not be approved unless at least 30 (thirty) days would remain between the date of approval and the later of the expiration date of a time to file a response or the expiration date of the maximum time period which can be extended under 37 C.F.R. § 1.136(a).

The request was signed by Denise M. Glassmeyer on behalf of all attorneys/agents associated with Customer Number 32299.

All attorneys/agents associated with Customer Number 32299 have been withdrawn. Applicant is reminded that there is no attorney of record at this time.

All future correspondence will be directed to the first named inventor Jerry Robarge at the address indicated below.

There is an outstanding Office action mailed February 13, 2006 that requires a reply from the applicant.

Telephone inquires concerning this decision should be directed to Petitions Examiner Liana Chase at (571) 272-3206. All other inquires concerning either the examination or status of the application should be directed to the Technology Center.

David Bucci
Petitions Examiner
Office of Petitions

Cc:

JERRY ROBARGE
913 OLYMPIC
KINGSFORD, MI 49802

UNITED STATES PATENT AND TRADEMARK OFFICE

Commissioner for Patents
United States Patent and Trademark Office
P.O. Box 1450
Alexandria, VA 22313-1450
www.uspto.gov

SAMUEL S. LEE
DERGOSITS & NOAH LLP
SUITE 1450
FOUR EMBARCADERO CENTER
SAN FRANCISCO CA 94111

COPY MAILED
DEC 18 2006
OFFICE OF PETITIONS

In re Application of :
Daniel H. Katsin :
Application No. 10/370,881 : ON PETITION
Filed: February 19, 2003 :
Attorney Docket No.: 602.03

This is a decision on the petition filed June 12, 2006 under 37 CFR 1.137(b),[1] to revive the above-identified application.

The petition is **GRANTED**.

This application became abandoned for failure to timely reply to the non-Final Office Action mailed October 3, 2005. A shortened statutory period of three months was set for replying to the non-Final Office Action. No extensions of time having been requested, this application became abandoned January 4, 2006. Accordingly, a Notice of Abandonment was mailed April 10, 2006.

A review of the record reveals that a three month extension of time was filed with the instant petition, however, pursuant to 37 CFR 1.136, an extension of time must be filed prior to the expiration of the maximum period obtainable for reply to avoid abandonment. Accordingly, since the $510.00 extension of time fee submitted with the petition on June 12, 2006, was subsequent to the maximum period obtainable for reply, this fee is

---

[1]Effective December 1, 1997, the provisions of 37 CFR 1.137(b) now provide that where the delay in reply was unintentional, a petition may be filed to revive an abandoned application or a lapsed patent pursuant to 37 CFR 1.137(b). A grantable petition filed under the provisions of 37 CFR 1.137(b) must be accompanied by:

(1) the required reply, unless previously filed. In a nonprovisional application abandoned for failure to prosecute, the required reply may be met by the filing of a continuing application. In a nonprovisional application filed on or after June 8, 1995, and abandoned for failure to prosecute, the required reply may also be met by the filing of a request for continued examination in compliance with § 1.114. In an application or patent, abandoned or lapsed for failure to pay the issue fee or any portion thereof, the required reply must be the payment of the issue fee or any outstanding balance thereof. In an application abandoned for failure to pay the publication fee, the required reply must include payment of the publication fee.

(2) the petition fee as set forth in 37 CFR 1.17(m);

(3) a statement that the entire delay in filing the required reply from the due date for the reply until the filing of a grantable petition pursuant to 37 CFR 1.137(b) was unintentional. The Commissioner may required additional information where there is a question whether the delay was unintentional; and

(4) any terminal disclaimer (and fee as set forth in 37 CFR 1.20(d)) required pursuant to 37 CFR 1.137(c)).

unnecessary and will be credited to counsel's deposit account no. 04-0882.

This matter is being referred to Technology Center 1746 for appropriate action on the amendment filed June 12, 2006.

Telephone inquiries concerning this matter should be directed to the undersigned Petitions Attorney at (571) 272-3212.

Patricia Faison-Ball

Patricia Faison-Ball
Senior Petitions Attorney
Office of Petitions

UNITED STATES PATENT AND TRADEMARK OFFICE

Commissioner for Patents
United States Patent and Trademark Office
P.O. Box 1450
Alexandria, VA 22313-1450
www.uspto.gov

CHOATE, HALL & STEWART/HARVARD UNIVERSITY
Two International Place
Boston, MA 02110

MAILED

JUL 08 2009

OFFICE OF PETITIONS

In re Application of	:	
Seung Bum Park, et al.	:	
Application No. 10/370,885	:	DECISION ON PETITION
Filed: February 20, 2003	:	TO WITHDRAW
Attorney Docket No. 2001180-0070 (HU1633CIP)	:	FROM RECORD
	:	

This is a decision on the Request to Withdraw as attorney or agent of record under 37 C.F.R. § 1.36(b), filed June 9, 2009.

The request is **APPROVED**.

A grantable request to withdraw as attorney/agent of record must be signed by every attorney/agent seeking to withdraw or contain a clear indication that one attorney is signing on behalf of another/others. A request to withdraw will not be approved unless at least 30 (thirty) days would remain between the date of approval and the later of the expiration date of a time to file a response or the expiration date of the maximum time period which can be extended under 37 C.F.R. § 1.136(a).

The request was signed by Brenda Jarell on behalf of all attorneys of record. All attorneys/agents have been withdrawn. Applicant is reminded that there is no attorney of record at this time.

All future correspondence will be directed to the first named inventor Seung Bum Park at the address indicated below.

Telephone inquiries concerning this decision should be directed to Terri Williams at 571-272-2991.

Terri Williams

Terri Williams
Petitions Examiner
Office of Petitions

cc: **Seung Bum Park**
6 Colonial Village Drive, #4
Arlington, MA 02474

UNITED STATES PATENT AND TRADEMARK OFFICE

UNITED STATES DEPARTMENT OF COMMERCE
United States Patent and Trademark Office
Address: COMMISSIONER FOR PATENTS
P.O. Box 1450
Alexandria, Virginia 22313-1450
www.uspto.gov

APPLICATION NUMBER	FILING OR 371(C) DATE	FIRST NAMED APPLICANT	ATTY. DOCKET NO./TITLE
10/370,885	02/20/2003	Seung Bum Park	2001180-0070 (HU1633CIP)

CONFIRMATION NO. 9530

58374
CHOATE, HALL & STEWART/HARVARD UNIVERSITY
TWO INTERNATIONAL PLACE
BOSTON, MA 02110

POWER OF ATTORNEY NOTICE

OC000000036819721

Date Mailed: 07/07/2009

NOTICE REGARDING CHANGE OF POWER OF ATTORNEY

This is in response to the Power of Attorney filed 06/09/2009.

- The withdrawal as attorney in this application has been accepted. Future correspondence will be mailed to the new address of record. 37 CFR 1.33.

/tswilliams/

Office of Data Management, Application Assistance Unit (571) 272-4000, or (571) 272-4200, or 1-888-786-0101

UNITED STATES PATENT AND TRADEMARK OFFICE

Commissioner for Patents
United States Patent and Trademark Office
P.O. Box 1450
Alexandria, VA 22313-1450
www.uspto.gov

THE PROCTER & GAMBLE COMPANY
INTELLECTUAL PROPERTY DIVISION
WINTON HILL BUSINESS CENTER - BOX 161
6110 CENTER HILL AVENUE
CINCINNATI, OH 45224

COPY MAILED
AUG 14 2006
OFFICE OF PETITIONS

In re Application of

Rajaiah, et al. :

Application No. 10/370,909

: DECISION ON PETITION

Filed: February 20, 2003

:

Attorney Docket No. 9159

This is a decision on the petition under 37 CFR 1.137(b), filed June 23, 2006, to revive the above-identified application.

The petition is **GRANTED**.

The above-cited application became abandoned for failure to file a proper reply in a timely manner to the final Office action mailed November 14, 2005, which set a shortened statutory period for reply of three (3) months from its mailing date. A response was filed on February 14, 2006. An Advisory Action mailed February 28, 2006, advised petitioner that the response of February 14, 2006, failed to place the application in condition for allowance. The application became abandoned on March 15, 2006.

The Request for Continued Examination filed June 23, 2006, is noted and made of record. It is noted that a non-final Office action was mailed on July 11, 2006, prior to a decision on the instant petition. The mailing of the non-final Office action was premature in light of the application still being in an abandoned status on July 11, 2006. Petitioner should contact Examiner Moore to determine whether she would like the non-final Office action to stand.

The request for an extension of time within the first month filed June 23, 2006, is noted but cannot be granted because it was made outside the maximum statutory period for reply. It is further noted that an extension of time is not necessary in this instance because the application was in an abandoned status at the time the request was made. Deposit account 16-2480 will be refunded $120.00, accordingly.

Deposit account 16-2480 will be charged $1,500.00 for the instant petition fee.

The application is being forwarded to Technology Center 1700, GAU 1712 for further processing.

Telephone inquiries concerning this decision should be directed to the undersigned at (571) 272-3222.

Kenya A. McLaughlin
Petitions Attorney
Office of Petitions

UNITED STATES PATENT AND TRADEMARK OFFICE

COMMISSIONER FOR PATENT
UNITED STATES PATENT AND TRADEMARK OFFIC
P.O. BOX 1450
ALEXANDRIA, VA 22313-1450
www.uspto.gov

MAIL

MAR 2 5 2004

DIRECTOR OFFICE
TECHNOLOGY CENTER 2600

Paper #4

MacMillan, Sobanski & Todd, LLC
One Maritime Plaza, Fourth Floor
720, Water Street
Toledo, Ohio 43604

In re Application of
KULESZ et al.
Application No. 10/370,913
Filed: February 21, 2003
For: **SYSTEM FOR DETECTION OF HAZARDOUS EVENTS**

:DECISION ON PETITION
:TO MAKE SPECIAL

This is a decision on the Request for re-consideration for petition to make special, filed September 13, 2002, under 37 C.F.R. §102(d) and M.P.E.P. §708.02(XI): Inventions For Countering Terrorism, to make the above-identified application special.

M.P.E.P. §708.02 (XI) sets forth the prerequisites for a grantable petition for Inventions For Countering Terrorism under 37 C.F.R. § 102(d).

M.P.E.P. §708.02 (XI) INVENTIONS FOR COUNTERING TERRORISM

In view of the importance of developing technologies for countering terrorism and the desirability of prompt disclosure of advances made in these fields, the U.S. Patent and Trademark Office will accord "special" status to patent applications relating to counter-terrorism inventions.
International terrorism as defined in 18 U.S.C. 2331 includes "activities that - (A) involve violent acts or acts dangerous to human life that are a violation of the criminal laws of the United States or of any State, or that would be a criminal violation if committed within the jurisdiction of the United States or of any State; [and] (B) appear to be intended - (i) to intimidate or coerce a civilian population; (ii) to influence the policy of a government by intimidation or coercion; or (iii) to affect the conduct of a government by assassination or kidnapping..." The types of technology for countering terrorism could include, but are not limited to, systems for detecting/identifying explosives, aircraft sensors/security systems, and vehicular barricades/disabling systems.

Petitioner's submission meets the criteria set out above with respect to countering terrorism as in M.P.E.P. § 708.02(XI). Accordingly, the Petition is **GRANTED**.

The application file is being forwarded to the Examiner of Record for expedited examination.

Krista Zele, Special Program Examiner
Technology Center 2600
Communications
(703) 305- 4701

UNITED STATES PATENT AND TRADEMARK OFFICE

COMMISSIONER FOR PATENTS
UNITED STATES PATENT AND TRADEMARK OFFICE
P.O. BOX 1450
ALEXANDRIA, VA 22313-1450
www.uspto.gov

Paper No. 060704

Leon D. Rosen
Freilich, Hornbaker & Rosen
Suite 1220
10960 Wilshire Blvd.
Los Angeles, CA 90024

JUN - 9 2004

In re Application of:	:	
Charles BATES et al.	:	
Application No. 10/370,916	:	DECISION ON PETITION
Filed: February 21, 2003	:	TO MAKE SPECIAL
Attorney Docket No. C-CMA-0431	:	

This is a decision on the petition under 37 C.F.R. § 1.102, filed April 28, 2003, to make the above-identified application special.

Petitioner requests that the above-identified application be made special under the accelerated examination procedure set forth in the Manual of Patent Examining Procedure (M.P.E.P.), Section 708.02, Item II, INFRINGEMENT.

Subject to a requirement for a further showing as may be necessitated by the facts of a particular case, an application may be made special because of actual infringement (but not for prospective infringement) upon payment of the fee under 37 CFR 1.17(h) and the filing of a petition accompanied by a statement by the applicant, assignee, or an attorney/agent registered to practice before the Office alleging:

(A) That there is an infringing device or product actually on the market or method in use;
(B) That a rigid comparison of the alleged infringing device, product, or method with the claims of the application has been made, and that, in his or her opinion, some of the claims are unquestionably infringed; and
(C) That he or she has made or caused to be made a careful and thorough search of the prior art or has a good knowledge of the pertinent prior art.
(D) Applicant must provide one copy of each of the references deemed most closely related to the subject matter encompassed by the claims if said references are not already of record.

The petition is DENIED.

The petition does not contain the required statement that there is an infringing device or product actually on the market or method in use.

Applicant's deposit account no. 06-1985 has been charged $130 to cover the petition fee.

Any request for reconsideration of this decision must be submitted within TWO (2) MONTHS from the mail date of this decision.

Inquiries regarding this decision should be directed to Jose' G. Dees at (571) 272-1569.

Jose' G. Dees, Special Programs Examiner
Technology Center 2800
Semiconductors, Electrical and Optical
Systems and Components

UNITED STATES PATENT AND TRADEMARK OFFICE

Commissioner for Patents
United States Patent and Trademark Office
P.O. Box 1450
Alexandria, VA 22313-1450
www.uspto.gov

HAYNES AND BOONE, LLP
IP SECTION
2323 VICTORY AVENUE
SUITE 700
DALLAS TX 75219

COPY MAILED
MAR 12 2010

In re Patent No. 7,664,696	:	
Issue Date: February 16, 2010	:	
Application No. 10/370,940	:	NOTICE
Filed: February 20, 2003	:	
Attorney Docket No. M-4540-2C-US	:	

This is a notice regarding your request for acceptance of a fee deficiency submission under 37 CFR 1.28. On September 1, 1998, the Court of Appeals for the Federal Circuit held that 37 CFR 1.28(c) is the sole provision governing the time for correction of the erroneous payment of the issue fee as a small entity. **See DH Technology v. Synergystex International, Inc. 154 F.3d 1333, 47 USPQ2d 1865 (Fed. Cir. Sept. 1, 1998).**

The Office no longer investigates or rejects original or reissue applications under 37 CFR 1.56. **1098 Off. Gaz. Pat. Office 502 (January 3, 1989)**. Therefore, nothing in this Notice is intended to imply that an investigation was done.

Your fee deficiency submission under 37 CFR 1.28 is hereby **ACCEPTED**.

This application is no longer entitled to small entity status. Accordingly, all future fees paid in this application must be paid at the large entity rate.

Inquiries related to this communication should be directed to Diane Goodwyn at (571) 272-6735.

Thurman K Page

Thurman K. Page
Petitions Examiner
Office of Petitions

UNITED STATES PATENT AND TRADEMARK OFFICE

Commissioner for Patents
United States Patent and Trademark Office
P.O. Box 1450
Alexandria, VA 22313-1450
www.uspto.gov

Paper No. 9

AVERY N. GOLDSTEIN, PH.D.
GIFFORD, KRASS, GROH, SPRINKLE,
ANDERSON & CITKOWSKI, P.C.
280 N. OLD WOODWARD AVENUE, SUITE 400
BIRMINGHAM, MI 48009-5394

COPY MAILED

FEB 28 2005

OFFICE OF PETITIONS

In re Application of	:	
Justin Sabbaugh	:	
Application No. 10/370,941	:	DECISION GRANTING PETITION
Filed: February 21, 2003	:	UNDER 37 CFR 1.137(b)
Attorney Docket No. 3180.00002	:	

This is a decision on the petition under 37 CFR 1.137(b), filed January 6, 2005, to revive the above-identified application.

The petition is **GRANTED**.

The petition satisfies the conditions for revival pursuant to the provisions of 37 CFR 1.137(b) in that (1) the reply in the form of an amendment; (2) the petition fee; and (3) the required statement of unintentional delay have been received. Accordingly, the reply to the nonfinal Office action of January 5, 2004, is accepted as having been unintentionally delayed.

Telephone inquiries concerning this decision should be directed to the undersigned at (571) 272-3208.

The application file is being forwarded to Technology Center AU 3643.

Karen Creasy

Karen Creasy
Petitions Examiner
Office of Petitions
Office of the Deputy Commissioner
for Patent Examination Policy

UNITED STATES PATENT AND TRADEMARK OFFICE

Commissioner for Patents
United States Patent and Trademark Office
P.O. Box 1450
Alexandria, VA 22313-1450
www.uspto.gov

THE PROCTER & GAMBLE COMPANY
INTELLECTUAL PROPERTY DIVISION - WEST BLDG
WINTON HILL BUSINESS CENTER - BOX 412
6250 CENTER HILL AVENUE
CINCINNATI OH 45224

COPY MAILED

AUG 27 2007

OFFICE OF PETITIONS

In re Patent No. 6,845,888	:	
Issue Date: January 25, 2005	:	
Application No. 10/370,998	:	DECISION ON PETITION
Filed: February 20, 2003	:	
Attorney Docket No. CM2433CL	:	

This is a decision on the "PETITION UNDER 37 C.F.R. §1.183 TO WAIVE RULES", filed January 12, 2006.

The petition is **GRANTED**.

An application may issue in the name of an assignee rather than the applicant if requested prior to issuance of a patent.[1] However, in the event the request is not made prior to issuance, a Certificate of Correction under 37 CFR 1.323 may be requested. A request for a Certificate of Correction under 37 CFR 1.323 to correct the assignee's name will not be granted unless a petition under 37 CFR 1.183 is granted. Such petition under 37 CFR 1.183 should include:

(A) the processing fee required by 37 CFR 1.17(i);

(B) a request for issuance of the application in the name of the assignee, or a request that a patent be corrected to state the name of the assignee;

---

[1] See 37 CFR 3.81.

(C) a statement that the assignment was submitted for recordation as set forth in 37 CFR 3.11 before issuance of the patent; and

(D) a request for a certificate of correction under 37 CFR 1.323 accompanied by the fee set forth in 37 CFR 1.20(a).[2]

Receipt of the $130 processing fee set forth in 37 CFR 1.17(i) and the $100 fee for the Certificate of Correction is acknowledged.

The file is being forwarded to the Certificate of Corrections Branch for issuance of the requested Certificate of Correction.

Telephone inquiries related to this decision should be directed to the undersigned at (571)272-3207.

Cliff Congo
Petitions Attorney
Office of Petitions

[2] MPEP 307.

UNITED STATES PATENT AND TRADEMARK OFFICE

Commissioner for Patents
United States Patent and Trademark Office
P.O. Box 1450
Alexandria, VA 22313-1450
www.uspto.gov

MCNEES WALLACE & NURICK LLC
100 PINE STREET
P.O. BOX 1166
HARRISBURG PA 17108-1166

9/11/09

In re Application of: SMASHEY, RUSSELL W. Serial No.: 10/371,005 Filed: Feb. 20, 2003 Docket: 13DV-12869-1 (07783-0018- Title: DIRECTIONALLY SOLIDIFIED SUPERALLOY WELD WIRE	DECISION ON PETITION under 37 CFR 1.181

This is a decision on the petition filed on May 20, 2008 filed under 37 CFR 1.181 seeking to have a certain rejection in the Examiner's Answer be designated as new grounds of rejection.

The petition is being considered pursuant to 37 CFR 1.181 and no fee is required.

The petition is GRANTED.

The following relevant facts include:

1. A final rejection was mailed on August 23, 2006. Claims 15-19, 21-22, 24-27 & 31-34 are rejected under 35 U.S.C. 103(a) as being unpatentable over Hunt (USPN 4,209,122) and further in view of Walker et al. (USPN 3,783,032).

2. In response to the final rejection, the applicant filed an appeal brief on February 20, 2007 to appeal the finally rejected claims.

3. The examiner issued an Examiner's Answer to the appeal brief on March 21, 2008. Under the Response to Argument of the Examiner Answer, on page 21 of the Examiner's Answer regarding claim 22,, the examiner stated that "It is well known in the metallurgical arts that nickel has a face centered cubic (FCC) crystallographic structure,

thus the very fact that Hunt and Walker et al. are directed to a nickel based superalloy(s) means that it has an FCC structure inherently present. The examiner has provided an ASM (American Society of Metals/Materials) reference which shows that nickel has an FCC structure (see reference ASM Online Handbook; Physical Metallurgy *to include these constituents."*

4. On May 20, 2008, the applicant filed the current petition arguing the examiner has improperly introduced the new reference in support of her rejection, and this constitutes a new ground of rejection raised in the Examiner's Answer. The applicant is requesting for the rejection of claim 22 from the Examiner's Answer to be designated as new ground of rejection.

Discussion and Analysis

A review of the examiner's answer shows that the examiner has augmented her arguments in the Examiner's Answer by introducing the new reference, namely ASM (American Society of Metals/Materials). If the prior art references in the Final Rejection were properly applied under 35 USC 103, then it would not be necessary to add this new evidence to show that the features claimed are well known in the art. One skilled in this technology would already have known what is common practice in the art. The citation of ASM (American Society of Metals/Materials) is unnecessary and should not have been added to support the rejection of dependent claim 22 in the Examiner's Answer. If the citation of the ASM (American Society of Metals/Materials) was necessary to understand and explain the rejection, then the references must have been applied against dependent claim 22 under the rejection. Because the examiner listed these handbooks, namely, ASM Online Handbook; Physical Metallurgy of Nickel and Nickel Alloys and ASM Handbook; General Characteristics of Wrought Products under Paragraph 8, Evidence Relied Upon and Response to Argument (on pages 20-21 of the Examiner's Answer), the references to the handbooks constitute new grounds of rejection.

In order to clarify the record and to comply with MPEP 1207.03[1], the examiner is directed to 1) vacate the examiner's answer of March 21, 2008 and 2) issue a revised examiner's answer without any reference to these newly cited ASM Online Handbook; Physical Metallurgy of Nickel and Nickel Alloys and ASM Handbook; General Characteristics of Wrought Products as examples of well known elements, if the examiner believes that the final rejection of August 23, 2006 is proper or 3) with the

---

[1] MPEP § 1207.03, last paragraph states: A new prior art reference >applied or< cited for the first time in an examiner's answer generally will constitute a new ground of rejection. If the citation of a new prior art reference is necessary to support a rejection, it must be included in the statement of rejection, which would be considered to introduce a new ground of rejection. Even if the prior art reference is cited to support the rejection in a minor capacity, it should be positively included in the statement of rejection. In re Hoch, 428 F.2d 1341, 1342 n.3, 166 USPQ 406, 407 n. 3 (CCPA 1970).**>Where< a newly cited reference is added merely as evidence of the prior ** statement made by the examiner >as to what is "well- known" in the art which was challenged for the first time in the appeal brief<, the citation of the reference in the examiner's answer would not >ordinarily< constitute a new ground of rejection within the meaning of 37 CFR *> 41.39(a)(2)<. See also MPEP § 2144.03.

Technology Director's approval, to clearly identify the examiner's grounds of rejection of dependent claim 22 in the revised examiner's answer as new ground of rejection with any or all of the new references. Under the circumstance, the examiner does have the option to re-open prosecution (with supervisory approval) if the cited ASM Online Handbook; Physical Metallurgy of Nickel and Nickel Alloys and ASM Handbook and General Characteristics of Wrought Products are to be used as prior art references against the claim 22. The examiner is reminded that the rejection in an examiner's answer must limited to the final rejection of the claims and the response to the applicant's arguments in the Appeal Brief of February 20, 2007.

Conclusion

For the foregoing reasons, the relief requested by the petition is granted to the extent that the Examiner's Answer of March 31, 2008 is hereby vacated and a new revised examiner's answer will be mailed in due course.

The application is being forwarded to the examiner in Art Unit 3742 via the Supervisory Patent Examiner for further processing consistent with this decision. Appellant may file a request for reconsideration of this decision, without fee. However, such a request must be filed within two months of the date of this decision. See 37 CFR 1.181. Any inquiry regarding this decision should be directed to Henry Yuen, Special Programs Examiner, at (571) 272-4856.

PETITION GRANTED.

Robert Olszewski, Director
Technology Center 3700

UNITED STATES PATENT AND TRADEMARK OFFICE

Commissioner for Patents
United States Patent and Trademark Office
P.O. Box 1450
Alexandria, VA 22313-1450
www.uspto.gov

FULWIDER PATTON
6060 CENTER DRIVE
10TH FLOOR
LOS ANGELES, CA 90045

COPY MAILED
SEP 0 5 2006
OFFICE OF PETITIONS

In re Application of

Grim, et al. :

Application No. 10/371,018

: DECISION ON PETITION

Filed: February 21, 2003

:

Attorney Docket No. 480032-362

This is a decision on the petition under 37 CFR 1.137(b), filed July 17, 2006, to revive the above-identified application.

The petition is **GRANTED**.

The above-cited application became abandoned for failure to reply in a timely manner to the non-final Office action mailed September 19, 2005, which set a shortened statutory period for reply of three (3) months from its mailing date. No extension of time pursuant to 37 CFR 1.136(a) was obtained within the allowable period. Accordingly, the application became abandoned on December 20, 2005.

The amendment filed July 17, 2006, is noted.

It is not apparent whether the person signing the statement of unintentional delay was in a position to have firsthand or direct knowledge of the facts and circumstances of the delay at issue. Nevertheless, such statement is being treated as having been made as the result of a reasonable inquiry into the facts and circumstances of such delay. See 37 CFR 10.18(b) and Changes to Patent Practice and Procedure; Final Rule Notice, 62 Fed. Reg. 53131, 53178 (October 10, 1997), 1203 Off. Gaz. Pat. Office 63, 103 (October 21, 1997). In the event that such an inquiry has not been made, petitioner must make such an inquiry. If such inquiry results in the discovery that it is not correct that the entire delay in filing the required reply from the due date for the reply until the filing of a grantable petition pursuant to 37 CFR 1.137(b) was unintentional, petitioner must notify the Office.

The Revocation of Power of Attorney and Appointment, filed July 17, 2006, is noted and made of record.

The application is being forwarded to Technology Center 3700, GAU 3764 for further processing.

Telephone inquiries concerning this decision should be directed to the undersigned at (571) 272-3222.

Kenya A. McLaughlin
Petitions Attorney
Office of Petitions

Enclosures: "Notice of Acceptance of Power of Attorney"
"Notice Regarding Change of Power of Attorney"

UNITED STATES DEPARTMENT OF COMMERCE
Patent and Trademark Office
ASSISTANT SECRETARY OF COMMERCE AND
COMMISSIONER OF PATENTS AND TRADEMARKS
Washington, DC 20231

11/28/07

Patent No. :6935654
Inventor(s) : Komaki et al.
Issued : 8/30/2005
Title : AIR BAG ACTIVATION DEVICE
Atty.doc./File No.

Request for Certificates of Correction

Consideration has been given to your request for the issuance of a Certificate of Correction, for the above – identified patent under the provisions of CFR 1.322.

Inspection of the application for the patent reveals that there needs to be a 1050 form to make these corrections, please submit the correction on the 1050 form. Therefore being no fault on the Patent and Trademark Office, It has no authority to issue a certificate of correction under the provision of 1.322.

In view of the forgoing, your request in this matter, is hereby denied.

Future written correspondence concerning this matter should be filed and directed to Decisions & Certificates of Correction Branch.

Henry Randall
Cecelia Newman
Decisions & Certificates
of Correction Branch
(703) 308-9390 Ext. 108

FOGG & POWERS LLC
P.O. BOX 581339
MINNEAPOLIS, MN 55458-1339

HR/CBN

UNITED STATES PATENT AND TRADEMARK OFFICE

Commissioner for Patents
United States Patent and Trademark Office
P.O. Box 1450
Alexandria, VA 22313-1450
www.uspto.gov

COPY MAILED
JUN 19 2006
OFFICE OF PETITIONS

Chief Patent Counsel
U.S. Surgical
a Division of Tyco Healthcare Group LP
150 Glover Avenue
Norwalk, CT 06856

In re Application of	:	
Eric R. Cosman	:	DECISION ON REQUEST
Application No. 10/371,098	:	TO WITHDRAW FROM
Filed: February 21, 2003	:	RECORD
Attorney Docket No. 2580 CIP 2	:	

This is a decision on the Request to Withdraw as attorney or agent of record under 37 CFR § 1.36(b), filed March 10, 2006.

The request is **NOT APPROVED**.

The Office cannot approve the request at this time since the reasons provided do not meet any of the conditions under the mandatory or permissive categories enumerated in 37 CFR 10.40. Section 10.40 of Title 37 of the Code of Federal Regulation states, "[a] practitioner shall not withdraw from employment in a proceeding before the Office without permission from the Office[.]" More specifically, 37 CFR 10.40 states, "[i]f paragraph (b) of this section is not applicable, a practitioner may not request permission to withdraw in matter pending before the Office unless such request or such withdrawal is" for one the permissive reasons listed in 37 CFR 10.40(c). The reasons set forth in the request, "this application has been acquired by Integra LifeSciences Corp.", does not meet any of the conditions set forth in 37 CFR 10.40.

All future communications from the Office will continue to be directed to the above address until otherwise notified by applicant.

There is an outstanding Office action mailed February 17, 2006 that requires a reply from the applicant.

Telephone inquiries concerning this decision should be directed to Andrea Smith at (571) 272-3226.

Andrea Smith
Petitions Examiner
Office of Petitions

Conferee:

cc: Thomas Runk, Esq.
Fulwider Patton
Howard Hughes Center
6060 Center Drive, Tenth Floor
Los Angeles, CA 90045

UNITED STATES PATENT AND TRADEMARK OFFICE

COMMISSIONER FOR PATENTS
UNITED STATES PATENT AND TRADEMARK OFFICE
P.O. BOX 1450
ALEXANDRIA, VA 22313-1450
www.uspto.gov

MAILED

APR 06 2010

OFFICE OF PETITIONS

Paper No.

JONES DAY
222 EAST 41ST ST
NEW YORK NY 10017

Applicant: Fouchier et al	:	DECISION ON PETITION
Patent Number: 7,449,324	:	under 37 CFR 1.705(d)
Issue Date: Nov. 11, 2008		
Application No. 10/371,099	:	ON REQUEST FOR RECONSIDERATION
Filed: February 21, 2003	:	OF PATENT TERM ADJUSTMENT
Atty. Docket Number: 7682-063-999	:	
	:	

This is a decision on the petition filed on December 15, 2008, which is being treated as a petition under 37 CFR 1.705(d) requesting that the patent term adjustment indicated on the above-identified patent be corrected to indicate that the term of the above-identified patent is extended or adjusted by one thousand two hundred and six (1206) days.

The petition to correct the patent term adjustment indicated on the above-identified patent to indicate that the term of the above-identified patent is extended is **GRANTED to the extent herein indicated.** However, the patent term adjustment is **one thousand one hundred and seventy five (1175)** days, rather than the requested one thousand two hundred and six days.

The Office notes that the amount of "B delay" occurring in this application is seven hundred and twenty-nine (729) days and the overlapping amount between "A" and "B" is twenty-nine(29)days. The "A" delay is seven hundred days (700) and Applicants delay is two hundred and twenty-five (225) days.

The application is being forwarded to the Certificates of Branch for issuance of a certificate of correction. The applicant is giving **one month or thirty (30) days** whichever is longer to reply to this DECISION. After the response period has elapsed, the Office will *sua sponte* issue a certificate of correction indicating that the term of the above-identified patent is extended or adjusted by one thousand and seventy-five (1175) days.

The Office acknowledges submission of the $200.00 fee set forth in 37 CFR 1.18(e). No additional fees are required.

Telephone inquiries specific to this matter should be directed to Maria Nuzzolillo, (571) 272-8150.

/Kery Fries/

Kery Fries
Senior Legal Advisor Attorney
Office of Patent Legal Administration
Office of Associate Commissioner
For Patent Examination Policy

Enclosure: Copy of DRAFT Certificate of Correction

UNITED STATES PATENT AND TRADEMARK OFFICE

CERTIFICATE OF CORRECTION

PATENT : 7,449,324 B2

DATED : November 11, 2008 **Draft**

INVENTOR(S) : Fouchier et al.

It is certified that error appears in the above-identified patent and that said Letters Patent is hereby corrected as shown below:

On the cover page,

[*] Notice: Subject to any disclaimer, the term of this patent is extended or adjusted under 35 USC 154(b) by (505) days

Delete the phrase "by 505 days" and insert – by 1175 days--

PALM INTRANET

Day : Monday
Date: 4/5/2010
Time: 13:51:07

PTA Calculations for Application: 10/371099			
Application Filing Date:	02/21/2003	PTO Delay (PTO):	730
Issue Date of Patent:	11/11/2008	Three Years:	0
Pre-Issue Petitions:	0	Applicant Delay (APPL):	225
Post-Issue Petitions:	0	Total PTA (days):	1175
PTO Delay Adjustment:	670		

File Contents History

Number	Date	Contents Description	PTO	APPL	START
106	04/05/2010	ADJUSTMENT OF PTA CALCULATION BY PTO	670		
101.5	10/22/2008	PTA 36 MONTHS	30		
101	11/11/2008	PATENT ISSUE DATE USED IN PTA CALCULATION			
100	09/29/2008	EXPORT TO FINAL DATA CAPTURE			
99	09/26/2008	DISPATCH TO FDC			
98	09/26/2008	APPLICATION IS CONSIDERED READY FOR ISSUE			
97	09/18/2008	ISSUE FEE PAYMENT VERIFIED			
96	09/18/2008	ISSUE FEE PAYMENT RECEIVED			
95	09/18/2008	FINISHED INITIAL DATA CAPTURE			
94	08/12/2008	WORKFLOW - QUERY REQUEST - FINISH			
93	08/11/2008	WORKFLOW - QUERY REQUEST - FINISH			
92	08/08/2008	TC RETURN TO PUBS			
91	08/08/2008	MAIL EXAMINER'S AMENDMENT			
90	08/06/2008	EXAMINER'S AMENDMENT COMMUNICATION			
89	07/10/2008	PUBS CASE REMAND TO TC			
88	07/22/2008	WORKFLOW - QUERY REQUEST - BEGIN			
87	07/03/2008	SEQUENCE FORWARDED TO PUBS ON TAPE			
86	06/23/2008	EXPORT TO INITIAL DATA CAPTURE			
85	06/19/2008	MAIL NOTICE OF ALLOWANCE			
84	06/19/2008	ISSUE REVISION COMPLETED			
83	06/19/2008	DOCUMENT VERIFICATION			
82	06/18/2008	NOTICE OF ALLOWANCE DATA VERIFICATION COMPLETED			
81	06/18/2008	NOTICE OF ALLOWABILITY			
80	02/21/2008	INFORMATION DISCLOSURE STATEMENT CONSIDERED			

79	02/21/2008	REFERENCE CAPTURE ON IDS			
78	02/21/2008	INFORMATION DISCLOSURE STATEMENT (IDS) FILED			
77	04/12/2008	DATE FORWARDED TO EXAMINER			
76	02/21/2008	REQUEST FOR CONTINUED EXAMINATION (RCE)			
75	04/12/2008	DISPOSAL FOR A RCE / CPA / R129			
74	02/21/2008	WORKFLOW - DRAWINGS FINISHED			
73	02/21/2008	INFORMATION DISCLOSURE STATEMENT (IDS) FILED			
72	02/21/2008	WORKFLOW - REQUEST FOR RCE - BEGIN			
71	01/02/2008	TC RETURN TO PUBS			
70	01/24/2008	MAIL MISCELLANEOUS COMMUNICATION TO APPLICANT			
69	01/24/2008	MISCELLANEOUS COMMUNICATION TO APPLICANT - NO ACTION COUNT			
68	01/02/2008	PUBS CASE REMAND TO TC			
67	01/09/2008	WORKFLOW - QUERY REQUEST - BEGIN			
66	01/04/2008	WORKFLOW - QUERY REQUEST - BEGIN			
63	12/01/2007	EXPORT TO INITIAL DATA CAPTURE			
62	12/05/2007	RECEIPT INTO PUBS			
61	11/21/2007	MAIL NOTICE OF ALLOWANCE			
60	11/20/2007	ISSUE REVISION COMPLETED			
59	11/20/2007	NOTICE OF ALLOWANCE DATA VERIFICATION COMPLETED			
58	11/20/2007	CASE DOCKETED TO EXAMINER IN GAU			
57	11/20/2007	DOCUMENT VERIFICATION			
56	11/20/2007	NOTICE OF ALLOWABILITY			
53	09/20/2007	DATE FORWARDED TO EXAMINER			
52	09/11/2007	RESPONSE AFTER NON-FINAL ACTION		31	48
51	09/11/2007	REQUEST FOR EXTENSION OF TIME - GRANTED			
50	04/26/2007	AFFIDAVIT(S) (RULE 131 OR 132) OR EXHIBIT(S) RECEIVED			
49	04/26/2007	RULE 47 / 48 CORRECTION OF INVENTORSHIP PAPERS FILED			
48	05/11/2007	MAIL NON-FINAL REJECTION			
47	05/10/2007	NON-FINAL REJECTION			
46	08/28/2006	INFORMATION DISCLOSURE STATEMENT CONSIDERED			

45	03/22/2007	DATE FORWARDED TO EXAMINER			
44	03/06/2007	RESPONSE AFTER NON-FINAL ACTION		89	41
43	03/06/2007	REQUEST FOR EXTENSION OF TIME - GRANTED			
42.7	08/28/2006	INFORMATION DISCLOSURE STATEMENT (IDS) FILED		105	32
42	08/28/2006	INFORMATION DISCLOSURE STATEMENT (IDS) FILED			
41	09/07/2006	MAIL NON-FINAL REJECTION			
40	09/05/2006	NON-FINAL REJECTION			
39	06/05/2006	INFORMATION DISCLOSURE STATEMENT CONSIDERED			
38	03/09/2006	INFORMATION DISCLOSURE STATEMENT CONSIDERED			
37	02/10/2005	INFORMATION DISCLOSURE STATEMENT CONSIDERED			
36	10/21/2004	INFORMATION DISCLOSURE STATEMENT CONSIDERED			
35	07/24/2006	CASE DOCKETED TO EXAMINER IN GAU			
34.7	06/05/2006	INFORMATION DISCLOSURE STATEMENT (IDS) FILED			
34	06/05/2006	INFORMATION DISCLOSURE STATEMENT (IDS) FILED			
33	05/22/2006	DATE FORWARDED TO EXAMINER			
32	05/15/2006	RESPONSE TO ELECTION / RESTRICTION FILED			
31	05/15/2006	REQUEST FOR EXTENSION OF TIME - GRANTED			
30	03/22/2006	MAIL RESTRICTION REQUIREMENT	700		-1
29.7	03/09/2006	INFORMATION DISCLOSURE STATEMENT (IDS) FILED			
29	03/09/2006	INFORMATION DISCLOSURE STATEMENT (IDS) FILED			
28	03/20/2006	REQUIREMENT FOR RESTRICTION / ELECTION			
27	02/10/2005	REFERENCE CAPTURE ON IDS			
26.7	02/10/2005	INFORMATION DISCLOSURE STATEMENT (IDS) FILED			
26	02/10/2005	INFORMATION DISCLOSURE STATEMENT (IDS) FILED			
25	12/30/2004	CHANGE IN POWER OF ATTORNEY (MAY INCLUDE ASSOCIATE POA)			
24	10/21/2004	REFERENCE CAPTURE ON IDS			

23.7	10/21/2004	INFORMATION DISCLOSURE STATEMENT (IDS) FILED			
23	10/21/2004	INFORMATION DISCLOSURE STATEMENT (IDS) FILED			
22	03/24/2004	CASE DOCKETED TO EXAMINER IN GAU			
21	12/29/2003	IFW TSS PROCESSING BY TECH CENTER COMPLETE			
20	12/29/2003	CASE DOCKETED TO EXAMINER IN GAU			
19	08/29/2003	APPLICATION RETURN FROM OIPE			
18	09/02/2003	APPLICATION IS NOW COMPLETE			
17	08/29/2003	PRE-EXAM OFFICE ACTION WITHDRAWN			
16	08/29/2003	APPLICATION RETURN TO OIPE			
15	08/28/2003	APPLICATION DISPATCHED FROM OIPE			
14	08/29/2003	APPLICATION IS NOW COMPLETE			
13	08/13/2003	ADDITIONAL APPLICATION FILING FEES			
12	08/13/2003	A SET OF SYMBOLS AND PROCEDURES, PROVIDED TO THE PTO ON A SET OF COMPUTER LISTINGS, THAT DESCRIBE IN			
11	08/13/2003	A STATEMENT BY ONE OR MORE INVENTORS SATISFYING THE REQUIREMENT UNDER 35 USC 115, OATH OF THE APPLIC			
10	02/21/2003	CLAIM PRELIMINARY AMENDMENT			
8	05/13/2003	NOTICE MAILED--APPLICATION INCOMPLETE--FILING DATE ASSIGNED			
6	04/15/2003	CLEARED BY L&R (LARS)			
5	04/14/2003	IFW SCAN & PACR AUTO SECURITY REVIEW			
4	03/10/2003	CRF IS GOOD TECHNICALLY / ENTERED INTO DATABASE			
3	03/07/2003	IFW SCAN & PACR AUTO SECURITY REVIEW			
2	02/21/2003	CRF DISK HAS BEEN RECEIVED BY PREEXAM / GROUP / PCT			
1	02/21/2003	INITIAL EXAM TEAM NN			

Search Another: Application# Search

EXPLANATION OF PTA CALCULATION

EXPLANATION OF PTE CALCULATION

To go back, right click here and select Back. To go forward, right click here and select Forward. To refresh, right click here and select Refresh.

Back to OASIS | Home page

SPE RESPONSE FOR CERTIFICATE OF CORRECTION

Paper No.: _____

DATE : 06/18/09

TO SPE OF : ART UNIT 1623

SUBJECT : Request for Certificate of Correction for Appl. No.: 10/371,108 Patent No.: 6,995,143 .

Please respond to this request for a certificate of correction within 7 days.

FOR IFW FILES:

Please review the requested changes/corrections as shown in the **COCIN** document(s) in the IFW application image. No new matter should be introduced, nor should the scope or meaning of the claims be changed.

Please complete the response (see below) and forward the completed response to scanning using document code **COCX**.

FOR PAPER FILES:

Please review the requested changes/corrections as shown in the attached certificate of correction. Please complete this form (see below) and forward it with the file to:

Certificates of Correction Branch (CofC)

Randolph Square
Palm Location 7580

Should the changes be made **Valerie Jackson** **Certificates of Correction Branch**

703-756-1573

Thank You For Your Assistance

The request for issuing the above-identified correction(s) is hereby:
Note your decision on the appropriate box.

XXX☒XX **Approved** — **All** changes apply.

☐ **Approved in Part** — Specify below which changes **do not** apply.

☐ **Denied** — State the reasons for denial below.

Comments: The C of C has been approved.

/S. A. Jiang/ — **SPE**

1623 — **Art Unit**

UNITED STATES PATENT AND TRADEMARK OFFICE

Commissioner for Patents
United States Patent and Trademark Office
P.O. Box 1450
Alexandria, VA 22313-1450
www.uspto.gov

DOUGHERTY CLEMENTS
1901 ROXBOROUGH ROAD
SUITE 300
CHARLOTTE, NC 28211

COPY MAILED

MAR 22 2006

OFFICE OF PETITIONS

In re Application of
Howard H. Ireland et al.
Application No. 10/371,121
Filed: February 21, 2003
Title of Invention: 10.615

ON PETITION

This is a decision on the petition filed January 4, 2006 under 37 CFR 1.137(b),[1] to revive the above-identified application.

The petition under 37 CFR 1.137 (b) is **GRANTED**.

This application became abandoned December 14, 2005 for failure to timely pay the issue fee on or before December 13, 2005. The instant petition and this decision precede the mailing of the Notice of Abandonment.

The issue fee and petition fee have been applied. All other requirements of 37 CFR 1.137(b) having now been met, this application file is being forwarded to the Publishing Division to be processed into a patent.

Telephone inquiries concerning this matter may be directed to the undersigned Petitions Attorney at (571) 272-3212.

Patricia Faison-Ball

Patricia Faison-Ball
Senior Petitions Attorney
Office of Petitions

---

[1] Effective December 1, 1997, the provisions of 37 CFR 1.137(b) now provide that where the delay in reply was unintentional, a petition may be filed to revive an abandoned application or a lapsed patent pursuant to 37 CFR 1.137(b). A grantable petition filed under the provisions of 37 CFR 1.137(b) must be accompanied by:

(1) the required reply, unless previously filed. In a nonprovisional application abandoned for failure to prosecute, the required reply may be met by the filing of a continuing application. In a nonprovisional application filed on or after June 8, 1995, and abandoned for failure to prosecute, the required reply may also be met by the filing of a request for continued examination in compliance with § 1.114. In an application or patent, abandoned or lapsed for failure to pay the issue fee or any portion thereof, the required reply must be the payment of the issue fee or any outstanding balance thereof.

(2) the petition fee as set forth in 37 CFR 1.17(m);

(3) a statement that the entire delay in filing the required reply from the due date for the reply until the filing of a grantable petition pursuant to 37 CFR 1.137(b) was unintentional. The Commissioner may required additional information where there is a question whether the delay was unintentional; and

(4) any terminal disclaimer (and fee as set forth in 37 CFR 1.20(d)) required pursuant to 37 CFR 1.137(c)).