UNITED STATES PATENT AND TRADEMARK OFFICE

COMMISSIONER FOR PATENTS
UNITED STATES PATENT AND TRADEMARK OFFICE
P.O. BOX 1450
ALEXANDRIA, VA 22313-1450
www.uspto.go

MAIL

JUL 05 2004

DIRECTOR OFFICE
TECHNOLOGY CENTER 2600

DAVID NEWMAN CHARTERED
CENTENNIAL SQUARE
P O BOX 2728
LAPLATA, MD 20646-2728

In re Application of
SCHILLING, DONALD L.
Application No. 10/386405
Filed: March 11, 2003
For:

TELEVISION VIA TELEPHONE USING SPREAD-SPECTRUM MODULATION

DECISION ON REQUEST TO WITHDRAW FROM RECORD

This is a decision on the request for withdrawal as agent of record filed on May 20, 2004.

A grantable request to withdraw as attorney/agent of record must:
(1) indicate the present mailing address of the attorney(s)/agent(s) who seek(s) to withdraw, and
(2) be signed by each attorney/agent seeking to withdraw or clearly be signed on their behalf, and
(3) be *approved* at least thirty (30) days prior to the maximum extendable period for response to any outstanding Office Action, and
(4) indicate the address to which future correspondence should be mailed.

Petitioner has met all of the above. Accordingly, the request is **GRANTED**.

Attorneys/agents listed in the Request to withdraw are withdrawn.

All future communications from the Office will be directed to the address listed below until otherwise notified by applicant. Applicant is reminded of the obligation to promptly notify the Patent and Trademark Office of any change in correspondence address to ensure receipt of all communications from the Office.

The file is being returned to TC 2600 Technical Support Staff to update the correspondence address and then will be forwarded to the files repository.

Kenneth Wieder
Special Program Examiner
Technology Center 2600
Communications
(703) 305-4710

Cc:
John Gabrysiak
ORLOVSKY MOODY SCHAAFF & GABRYSIAK
187 HIGHWAY 36
WEST LONG BRANCH, NJ 07764

UNITED STATES PATENT AND TRADEMARK OFFICE

MAIL

AUG 0 5 2004

DIRECTOR OFFICE
TECHNOLOGY CENTER 2600

COMMISSIONER FOR PATENTS
UNITED STATES PATENT AND TRADEMARK OFFICE
P.O. BOX 1450
ALEXANDRIA, VA 22313-1450
www.uspto.go

MAIL
JUL 0 5 2004
DIRECTOR OFFICE
TECHNOLOGY CENTER 2600

DAVID NEWMAN CHARTERED
CENTENNIAL SQUARE
P O BOX 2728
LAPLATA, MD 20646-2728

In re Application of
SCHILLING, DONALD L.
Application No. 10/386405
Filed: March 11, 2003
For:

TELEVISION VIA TELEPHONE USING SPREAD-SPECTRUM MODULATION

DECISION ON REQUEST TO WITHDRAW FROM RECORD

This is a decision on the request for withdrawal as agent of record filed on May 20, 2004.

A grantable request to withdraw as attorney/agent of record must:
(1) indicate the present mailing address of the attorney(s)/agent(s) who seek(s) to withdraw, and
(2) be signed by each attorney/agent seeking to withdraw or clearly be signed on their behalf, and
(3) be *approved* at least thirty (30) days prior to the maximum extendable period for response to any outstanding Office Action, and
(4) indicate the address to which future correspondence should be mailed.

Petitioner has met all of the above. Accordingly, the request is **GRANTED**.

Attorneys/agents listed in the Request to withdraw are withdrawn.

All future communications from the Office will be directed to the address listed below until otherwise notified by applicant. Applicant is reminded of the obligation to promptly notify the Patent and Trademark Office of any change in correspondence address to ensure receipt of all communications from the Office.

The file is being returned to TC 2600 Technical Support Staff to update the correspondence address and then will be forwarded to the files repository.

Kenneth Wieder
Special Program Examiner
Technology Center 2600
Communications
(703) 305-4710

Cc:
John Gabrysiak
ORLOVSKY MOODY SCHAAFF & GABRYSIAK
187 HIGHWAY 36
WEST LONG BRANCH, NJ 07764

Re-mail
Incorrect mail date
correct date 8/5/04

BEST AVAILABLE COPY

SPE RESPONSE FOR CERTIFICATE OF CORRECTION

DATE : 2/8/07

Paper No.: ____

TO SPE OF : ART UNIT 1652

SUBJECT : Request for Certificate of Correction for Appl. No.: 10/386414 Patent No.: 7098015 B2

Please respond to this request for a certificate of correction within 7 days.

Please review the requested changes/corrections as shown in the **COCIN** document(s) in the IFW application image. No new matter should be introduced, nor should the scope or meaning of the claims be changed.

Please complete the response (see below) and forward the completed response to scanning using document code **COCX**.

Virginia Tolbert
Certificates of Correction Branch

703-308-9390 ext. 113

Thank You For Your Assistance

The request for issuing the above-identified correction(s) is hereby:
Note your decision on the appropriate box.

- ☑ **Approved** — All changes apply.
- ☐ **Approved in Part** — Specify below which changes **do not** apply.
- ☐ **Denied** — State the reasons for denial below.

Comments: _____

KATHLEEN KERR BRAGDON, PH.D.
SUPERVISORY PATENT EXAMINER

Kathleen Kerr Bragdon
SPE

1656
Art Unit

UNITED STATES PATENT AND TRADEMARK OFFICE

Commissioner for Patents
United States Patent and Trademark Office
P.O. Box 1450
Alexandria, VA 22313-1450
www.uspto.gov

BANNER & WITCOFF LTD.,
ATTORNEYS FOR CLIENT NOS. 003797 & 013797
1001 G STREET, N.W.
SUITE 1100
WASHINGTON DC 20001-4597

COPY MAILED

SEP 29 2006

OFFICE OF PETITIONS

In re Application of	:	
Dawson Yee	:	
Application No. 10/386,436	:	ON PETITION
Filed: March 13, 2003	:	
Attorney Docket No. 003797.00470	:	

This is a decision on the petition, filed April 5, 2006, under 37 CFR 1.313(c)(2) to withdraw the above-identified application from issue after payment of the issue fee.

The petition is **GRANTED**.

The above-identified application is withdrawn from issue for consideration of a submission under 37 CFR 1.114 (request for continued examination). See 37 CFR 1.313(c)(2).

Petitioner is advised that the issue fee paid on January 31, 2006, in the above-identified application cannot be refunded. If, however, the above-identified application is again allowed, petitioner may request that it be applied towards the issue fee required by the new Notice of Allowance.[1]

Telephone inquiries should be directed to the undersigned at (571) 272-3208.

The examiner of Technology Center AU 2629 will consider the request for continued examination under 37 CFR 1.114.

Karen Creasy
Petitions Examiner
Office of Petitions

---

[1] The request to apply the issue fee to the new Notice may be satisfied by completing and returning the new Issue Fee Transmittal Form PTOL-85(b), which includes the following language thereon: "Commissioner for Patents is requested to apply the Issue Fee and Publication Fee (if any) or re-apply any previously paid issue fee to the application identified above." Petitioner is advised that, whether a fee is indicated as being due or not, the Issue Fee Transmittal Form **must** be completed and timely submitted to avoid abandonment. Note the language in bold text on the first page of the Notice of Allowance and Fee(s) Due (PTOL-85).

UNITED STATES PATENT AND TRADEMARK OFFICE

Commissioner for Patents
United States Patent and Trademark Office
P.O. Box 1450
Alexandria, VA 22313-1450
www.uspto.gov

Date : 2/12/08

Patent No. : 7273672 B2
Application No : 10/386470
Inventor(s) : Sone et al.
Issued : Sep. 25, 2007
Title : **SOLID POLYMER ELECTROLYTE FUEL CELL**
Docket No. : P68711US0

Re: Request for Certificate of Correction

Consideration has been given your request for the issuance of a certificate of correction for the above-identified patent under the provisions of 37 CFR 1.322 and/or 1.323.

Assignees' names and addresses (assignment data) printed in a patent are based *solely* on information supplied in the appropriate space for identifying the assignment data, i.e., item 3 of the Fee(s) Transmittal Form PTOL-85B. After payment of the issue fee, correction of assignment data submitted on the PTOL-85B can only be done by Certificate of Correction under 37 CFR 1.323, with a request under 37 CFR 3.81(b).

A request for a patent to be corrected to state the name of the assignee must:

A. state that the assignment was submitted for recordation as set forth in 37 CFR 3.11 before issuance of the patent;
B. include a request for a certificate of correction under 37 CFR 1.323 along with the fee set forth in 37 CFR 1.20(a); and
C. include the processing fee set forth in 37 CFR 1.17(i).

If the request is granted, Certificates of Correction Branch will be notified that a Certificate of Correction may be issued.

See Manual of Patent Examining Procedure, Section 1481.01 (Rev. 3) (Oct. 2005).

Applicant has not included items A and or C above, accordingly, the request for Certificate of Correction to add or change the assignee data is denied.

Any request under 37 CFR 3.81(b) should be directed to the following address or facsimile number:

By mail:	Mail Stop PETITIONS Commissioner for Patents Post Office Box 1450 Alexandria, VA 22313-1450
By hand:	Customer Service Window Mail Stop Petitions Randolph Building 401 Dulany Street Alexandria, VA 22314
By fax:	571-273-8300 ATTN: Office of Petitions

If a fee (currently $100) was previously submitted for consideration of a Request for Certificate of Correction, under CFR 1.323, to correct assignment data, no additional fee is required.

Elisha Evans
For Cecelia Newman
Decisions & Certificates
of Correction Branch
(703) 308-9390 ext. 110

JACOBSON HOLMAN PLLC
400 SEVENTH STREET N.W.
SUITE 600
WASHINGTON DC 20004

CBN/eme

UNITED STATES PATENT AND TRADEMARK OFFICE

Commissioner for Patents
United States Patent and Trademark Office
P.O. Box 1450
Alexandria, VA 22313-1450
www.uspto.gov

MAILED

MAR 29 2010

OFFICE OF PETITIONS

JACOBSON HOLMAN PLLC
400 SEVENTH STREET N.W.
SUITE 600
WASHINGTON DC 20004

In re Patent No. 7,273,672	:	
Issue Date : September 25, 2007	:	
Application No. 10/386,470	:	ON PETITION
Filed: March 13, 2003	:	
Attorney Docket No. P68711US0	:	

This is a decision on the petition filed December 22, 2009, which is being treated as a request under 37 CFR 3.81(b)[1] to correct the name of the assignee's information on the front page of the above-identified patent by way of a Certificate of Correction.

The request is **GRANTED**.

The $130 processing fee set forth in 37 CFR 1.17(i) will be charged to Deposit Account No. 06-1358, as authorized.

Telephone inquiries concerning this decision may be directed to Diane Goodwyn at (571) 272-6735. Inquiries regarding the issuance of a certificate of correction should be directed to the Certificate of Correction Branch at (571) 272-4200.

The Certificates of Correction Branch will be notified of this decision granting the petition under 37 CFR 3.81(b) and directing issuance of the requested Certificate of Correction.

Thurman K. Page
Petitions Examiner
Office of Petitions

---

[1] *See* MPEP 1309, subsection II; and Official Gazette of June 22, 2004.

UNITED STATES PATENT AND TRADEMARK OFFICE

Commissioner for Patents
United States Patent and Trademark Office
P.O. Box 1450
Alexandria, VA 22313-1450
www.uspto.gov

FINNEGAN, HENDERSON, FARABOW, GARRETT & DUNNER LLP
901 NEW YORK AVENUE, NW
WASHINGTON DC 20001-4413

COPY MAILED

MAY 17 2007

OFFICE OF PETITIONS

In re Application of	:	
Hirayama, Yuzo	:	
Application No. 10/386,492	:	ON PETITION
Filed: March 13, 2003	:	
Attorney Docket No. 04329.3015	:	

This is a decision on the petition under 37 CFR 1.181, filed March 11, 2007, requesting the withdrawal of the holding of abandonment in the above-identified application and has been so treated.

The petition to withdraw the holding of abandonment is **GRANTED.**

The above-identified application was held abandoned for failure to timely reply to the non-final Office action mailed August 16, 2006, which set a shortened statutory period for reply of three (3) months. A reply was due on or before November 16, 2006. A Notice of Abandonment was mailed on February 28, 2007.

Petitioner states that the reply was in fact timely filed. To support this assertion, petitioner has submitted a copy of the return postcard, which acknowledges receipt by the U.S. Patent and Trademark Office (USTPO) on February 15, 2007 of 1. Petition for Extension of Time (1 page); 2. Amendment and Request for Reconsideration (15 pages); and 3. Check in the amount of $1020.00.

A review of the application file shows that the above-listed documents originally submitted on February 15, 2007 are of record. Further, USPTO financial records reflects payment of the $1020.00 extension of time fee on February 15, 2007.

In view of the above, the holding of abandonment is hereby withdrawn and the application restored to pending status.

A petition to withdraw the holding of abandonment under the provisions of 37 CFR 1.181 does not require a fee and none has been charged.

This matter is being referred to Technology Center AU 2621 for further examination on the merits.

Telephone inquiries concerning this decision should be directed to the undersigned at (571) 272-3206. All other inquiries should be directed to the Technology Center.

Liana Walsh
Petitions Examiner
Office of Petitions

UNITED STATES PATENT AND TRADEMARK OFFICE

Commissioner for Patents
United States Patent and Trademark Office
P.O. Box 1450
Alexandria, VA 22313-1450
www.uspto.gov

BURNS DOANE SWECKER & MATHIS LLP
P O BOX 1404
ALEXANDRIA, VA 22313-1404

COPY MAILED
JUL 0 7 2006
OFFICE OF PETITIONS

In re Application of	:	
Isao Sakakibara et al	:	
Application No. 10/386,512	:	DECISION GRANTING PETITION
Filed: March 13, 2003	:	UNDER 37 CFR 1.313(c)(2)
Attorney Docket No. 000409-014	:	

This is a decision on the petition, filed July 6, 2006, under 37 CFR 1.313(c)(2) to withdraw the above-identified application from issue after payment of the issue fee.

The petition is **GRANTED**.

The above-identified application is withdrawn from issue for consideration of a submission under 37 CFR 1.114 (request for continued examination). See 37 CFR 1.313(c)(2).

Petitioner is advised that the issue fee paid on May 26, 2006 in the above-identified application cannot be refunded. If, however, the above-identified application is again allowed, petitioner may request that it be applied towards the issue fee required by the new Notice of Allowance.[1]

Telephone inquiries should be directed to the undersigned at (571) 272-3218.

This matter is being referred to Technology Center AU 3746 for processing of the request for continued examination under 37 CFR 1.114 and for consideration of the Information Disclosure Statement.

Frances Hicks
Petitions Examiner
Office of Petitions

C:\Documents and Settings\FHicks\My Documents\470\july9\386512.wpd

---

[1] *The request to apply the issue fee to the new Notice may be satisfied by completing and returning the new Part B – Fee(s) Transmittal Form (along with any balance due at the time of submission), which includes the following language thereon: "The Director of the USPTO is requested to apply the Issue Fee and Publication Fee (if any) or to re-apply any previously paid issue fee in the application identified above. Petitioner is advised that, whether a fee is indicated as being due or not, the Issue Fee Transmittal Form* ***must*** *be completed and timely submitted to avoid abandonment. Note the language in bold text on the first page of the Notice of Allowance and Fee(s) Due (PTOL-85).*

UNITED STATES PATENT AND TRADEMARK OFFICE

COMMISSIONER FOR PATENTS
UNITED STATES PATENT AND TRADEMARK OFFICE
P.O. BOX 1450
ALEXANDRIA, VA 22313-1450
www.uspto.gov

MAR 18 2004

MAILED

MAR 18 2004

OFFICE OF THE DIRECTOR
TC 3600

Oliff & Berridge, PLC
P.O. Box 19928
Alexandria, VA 22320

In re application of
Pierre Gignoux et al.
Application No. 10/386,519
Filed: March 13, 2003
For: STEP-IN SNOWBOARD BINDING

DECISION ON PETITION TO MAKE SPECIAL (INFRINGEMENT)

This is a decision on the petition under 37 C.F.R § 1.102(d) filed November 24, 2003 to make the above-identified application special.

The petition requests that the above-identified application be made special under the procedure set forth in M.P.E.P. § 708.02, item II: Infringement.

MPEP 708.02 states that a Petition to Make Special based on Infringement must have the following: (1) the appropriate petition fee under 37 CFR 1.17(i); (2) a statement by the assignee, applicant, or attorney alleging: (A) that there is an infringing device or product actually on the market or method in use; (B) that a rigid comparison of the alleged infringing device, product or method with the claims of the application has been made, and that, in his or her opinion, some of the claims are unquestionably infringed; and (C) that he or she has made a careful and thorough search of the prior art, or has good knowledge of the prior art, and has sent a copy of the references deemed most closely related to the subject matter encompassed by the claims.

The petition filed November 24, 2003 meets all of the requirements above and, therefore, the petition is **GRANTED**.

With regards to element 2(C) above, Information Disclosure Statements were filed on March 13, May 20 and June 5, 2003.

SUMMARY: Petition to Make Special **GRANTED**.

Kenneth J. Dorner
Special Programs Examiner
Technology Center 3600
(703) 308-0866

KJD/mjz: 2/5/04

SPE RESPONSE FOR CERTIFICATE OF CORRECTION

Paper No.: _____

DATE : June 2, 2006

TO SPE OF : ART UNIT 1752 (S.P.E. Cynthia Kelly)

SUBJECT : Request for Certificate of Correction for Appl. No.: 10/386,556 Patent No.: 6897013

Please respond to this request for a certificate of correction within 7 days.

Please review the requested changes/corrections as shown in the **COCIN** document(s) in the IFW application image. No new matter should be introduced, nor should the scope or meaning of the claims be changed.

Please complete the response (see below) and forward the completed response to scanning using document code **COCX**.

STAN POWELL

Certificates of Correction Branch

703-308-9390 ext. 120

Thank You For Your Assistance

The request for issuing the above-identified correction(s) is hereby:

Note your decision on the appropriate box.

- ☒ **Approved** — **All** changes apply.
- ☐ **Approved in Part** — **Specify below** which changes **do not** apply.
- ☐ **Denied** — State the reasons for denial below.

Comments: _____

Cynthia Kelly 1752

SPE Art Unit

UNITED STATES PATENT AND TRADEMARK OFFICE

COMMISSIONER FOR PATENTS
UNITED STATES PATENT AND TRADEMARK OFFICE
P.O. BOX 1450
ALEXANDRIA, VA 22313-1450
www.uspto.gov

Paper No.

SUGHRUE, MION, ZINN
2100 Pennsylvania Avenue, N.W.
Washington DC 20037-3202

COPY MAILED
DEC 18 2006
OFFICE OF PETITIONS

In re Application of :
Tachikawa et al. : DECISION ON PETITION
Application No. 10/386,562 :
Filed: March 13, 2003 :
Attorney Docket No. Q-74651 :

This is a decision on the PETITION UNDER 37 CFR § 1.181 TO WITHDRAW A HOLDING OF ABANDONMENT filed August 23, 2006 (and resubmitted December 5, 2006).

The above-identified application became abandoned for failure to file a timely and proper reply to the non-final Office action mailed January 26, 2006. This Office action set a shortened statutory period for reply of three (3) months, with extensions of time obtainable under § 1.136(a). No reply considered filed and no extension of time considered obtained, the application became abandoned effective April 27, 2006. A courtesy Notice of Abandonment was mailed on August 17, 2006.

In response, applicants timely filed the instant petition. Petitioner maintains that an Amendment under 37 C.F.R. §1.111 was in fact timely filed within the PTO within the required time for reply. Petitioner points out that a review of the electronic file wrapper for the application on the U.S. PTO PAIR website reveals that the response is included in a document entitled "Fee Worksheet (PTO-875)" dated "7-14-06."

The image file wrapper (IFW) is the Official record of the papers filed in an application. A review of the IFW record for this application confirms that the response is present in the application as stated by petitioner. Further, a review of the Amendment and the extension of time reveal that they bear a date of receipt in the Office of June 26, 2006.

Further, the two-month extension of time, required to make the response timely, was previously charged to petitioner's Deposit Account.

Accordingly, the Notice of Abandonment mailed August 17, 2006 is hereby VACATED, and the holding of abandonment is hereby WITHDRAWN.

The petition under § 1.181 is GRANTED.

No fee is required on petition under § 1.181.

The image file wrapper has been corrected to separate the Amendment documents from the Request for Refund documents and to properly show all as filed on June 26, 2006. It is suggested that such requests for refund be filed separately from Amendments. As happened here, when such papers are filed together, the Office may not act on both. See 37 CFR 1.4(c).

It is noted that Office records indicate that applicant's request for refund was acted on on July 14, 2006.

Technology Center AU 1641 has been advised of this decision. The application file is, thereby, forwarded to the Technology Center's technical support staff to withdraw the holding of abandonment and for consideration by the examiner of the response shown to have been timely filed on June 26, 2006.

Telephone inquiries specific to this decision should be directed to the undersigned at (571) 272-3219.

Nancy Johnson
Senior Petitions Attorney
Office of Petitions

UNITED STATES PATENT AND TRADEMARK OFFICE

Commissioner for Patents
United States Patent and Trademark Office
P.O. Box 1450
Alexandria, VA 22313-1450
www.uspto.gov

SUGHRUE MION, PLLC
2100 PENNSYLVANIA AVENUE, N. W.
SUITE 800
WASHINGTON DC 20037

COPY MAILED
DEC 0 2 2009
OFFICE OF PETITIONS

In re Patent No. 7,368,277	:	
Issued: May 6, 2008	:	
Application No. 10/386,562	:	ON PETITION
Filed: March 13, 2003	:	
Attorney Docket No. Q-74651	:	

This is a decision on the petition filed August 12, 2009, which is being treated as a request under 37 CFR 3.81(b)[1] to correct the name of the assignee on the front page of the above-identified patent by way of a Certificate of Correction.

The request is **GRANTED**.

A Certificate of Correction was issued on September 8, 2009.

Telephone inquiries concerning this decision may be directed to Joan Olszewski at (571) 272-7751. Inquiries regarding the certificate of correction should be directed to the Certificate of Correction Branch at (571) 272-4200.

/Liana Walsh/
Liana Walsh
Petitions Examiner
Office of Petitions

[1] *See* MPEP 1309, subsection II; and Official Gazette of June 22, 2004.

UNITED STATES PATENT AND TRADEMARK OFFICE

Commissioner for Patents
United States Patent and Trademark Office
P.O. Box 1450
Alexandria, VA 22313-1450
www.uspto.gov

SCHERING-PLOUGH CORPORATION
PATENT DEPARTMENT (K-6-1, 1990)
2000 GALLOPING HILL RD
KENILWORTH NJ 07033-0530

COPY MAILED

FEB 08 2005

OFFICE OF PETITIONS

In re Application	:	
Wrobleski, et al.	:	
Application No. 10/386,577	:	DECISION ON APPLICATION
Filed: March 12, 2003	:	FOR PATENT TERM ADJUSTMENT
Atty Docket No. CN01557K1	:	

This is a decision on the "Request for Reconsideration of Patent Term Adjustment under 37 C.F.R. § 1.705(b)," filed December 13, 2004. Applicants request that the initial determination of patent term adjustment under 35 U.S.C. 154(b) be corrected from zero (0) days to fourteen (14) days.

The application for patent term adjustment is **GRANTED**.

The Office has updated the PAIR screen to reflect that the correct Patent Term Adjustment (PTA) determination at the time of the mailing of the Notice of Allowance is **fourteen (14) days**. A copy of the updated PAIR screen, showing the correct determination, is enclosed.

On November 4, 2004, the Office mailed the Determination of Patent Term Adjustment under 35 U.S.C. 154(b) in the above identified application. The Notice stated that the patent term adjustment (PTA) to date is zero (0) days. On December 13, 2004, Applicants timely[1] submitted the instant application for patent term adjustment, asserting that the correct number of days of PTA at the time of the mailing of the Notice of Allowance is fourteen (14) days.

Applicants assert entitlement to a patent term adjustment of fourteen (14) days on the basis that the PTO improperly assessed Applicants a delay of one hundred two (102) days for responding to a Notice to File Missing Parts mailed on May 9, 2003. Applicants assert that they timely filed a response on July 10, 2003, within the three month period pursuant to 37 C.F.R. 1.704(b).

Applicants fail to state whether the patent issuing from the application is subject to a terminal disclaimer.

The Office initially determined a patent term adjustment of zero (0) days based on an adjustment for PTO delay of fourteen (14) days pursuant to 35 U.S.C. 154(b)(1)(A)(i) and 37 C.F.R. § 1.703(a)(1), reduced by Applicants' delay of one hundred two (102) days pursuant to 35 U.S.C. 154(b)(2)(C)(ii) and 37 C.F.R. § 1.704(b). The adjustment of 102 days is at issue.

The adjustment of 102 days has been found to be incorrect. A review of the application file reveals that a Notice to File Missing Parts of Nonprovisional Application was mailed on May 9, 2003. Applicants timely filed a complete response to this notice on July 10, 2003. As this was timely pursuant to 37 CFR 1.704(b), no applicant delay should have been assessed.

In view thereof, the correct determination of patent term adjustment at the time of the mailing of the Notice of Allowance is **fourteen (14) days** (14 days of PTO delay and 0 days of applicant delay).

The $200.00 fee set forth in 37 CFR 1.18(e) has been charged to Deposit Account No. 19-0365, as authorized.

The application file is being forwarded to the Office of Patent Publication for processing into a patent.

---

[1] Applicants filed the application for patent term adjustment prior to the filing of the issue fee.

Telephone inquiries specific to this matter should be directed to Cliff Congo, Petitions Attorney, at (571)272-3207.

Karin A Ferriter

Karin Ferriter
Senior Legal Advisor
Office of Patent Legal Administration
Office of Deputy Commissioner
for Patent Examination Policy

Enclosure: Copy of Revised PAIR Screen

SPE RESPONSE FOR CERTIFICATE OF CORRECTION

DATE : 1/21/10

Paper No.: —

TO SPE OF : ART UNIT 2836

SUBJECT : Request for Certificate of Correction for Appl. No.: 10/386578 Patent No.: 6992877 B2

Please respond to this request for a certificate of correction within 7 days.

FOR IFW FILES:

Please review the requested changes/corrections as shown in the **COCIN** document(s) in the IFW application image. No new matter should be introduced, nor should the scope or meaning of the claims be changed.

Please complete the response (see below) and forward the completed response to scanning using document code **COCX**.

FOR PAPER FILES:

Please review the requested changes/corrections as shown in the attached certificate of correction. Please complete this form (see below) and forward it with the file to:

Certificates of Correction Branch (CofC)
Randolph Square – 9D10-A
Palm Location 7580

Virginia Tolbert
Certificates of Correction Branch
571-272-0460

Thank You For Your Assistance

The request for issuing the above-identified correction(s) is hereby:
Note your decision on the appropriate box.

- [x] **Approved** — **All** changes apply.
- [ ] **Approved in Part** — Specify below which changes **do not** apply.
- [ ] **Denied** — State the reasons for denial below.

Comments: _____

Jared Fureman
Jared Fureman SPE AU 2836 2/22/2010

UNITED STATES PATENT AND TRADEMARK OFFICE

Commissioner for Patents
United States Patent and Trademark Office
P.O. Box 1450
Alexandria, VA 22313-1450
www.uspto.gov

PROSKAUER ROSE LLP
1001 PENNSYLVANIA AVE, N.W.,
SUITE 400 SOUTH
WASHINGTON DC 20004

COPY MAILED

JUL 19 2007

OFFICE OF PETITIONS

In re Application of	:	
Yuan et al.	:	
Application No. 10/386599	:	
Filing or 371(c) Date: 03/13/2003	:	ON PETITION
Patent No. 7197390	:	
Issue Date: 03/27/2007	:	
Title of Invention:	:	
VEHICLE WITH ADAPTIVE	:	
CRUISE CONTROL SYSTEM	:	

This is a notice regarding request for acceptance of a fee deficiency submission under 37 CFR 1.28. On September 1, 1998, the Court of Appeals for the Federal Circuit held that 37 CFR 1.28(c) is the sole provision governing the time for correction of the erroneous payment of the issue fee as a small entity. **See DH Technology v. Synergystex International, Inc. 154 F.3d 1333, 47 USPQ2d 1865 (Fed. Cir. Sept. 1, 1998).**

The Office no longer investigates or rejects original or reissue applications under 37 CFR 1.56. **1098 Off. Gaz. Pat. Office 502 (January 3, 1989)**. Therefore, nothing in this Notice is intended to imply that an investigation was done.

Your fee deficiency submission under 37 CFR 1.28 is hereby **ACCEPTED**.

This application is no longer entitled to small entity status. Accordingly, all future fees paid in this application must be paid at the large entity rate.

Telephone inquiries concerning this matter should be directed to the undersigned at (571) 272-3232.

Derek L. Woods
Attorney
Office of Petitions

UNITED STATES PATENT AND TRADEMARK OFFICE

COMMISSIONER FOR PATENTS
UNITED STATES PATENT AND TRADEMARK OFFICE
P.O. BOX 1450
ALEXANDRIA, VA 22313-1450
WWW.USPTO.GOV

MYERS BIGEL SIBLEY & SAJOVEC
PO BOX 37428
RALEIGH, NC 27627

COPY MAILED

SEP 1 2 2003

OFFICE OF PETITIONS

In re Application of	:	
Jung-Hee Chung et al	:	DECISION GRANTING
Application No. 10/386,640	:	PETITION
Filed: March 12, 2003	:	
Attorney Docket No. 5649-1066	:	

This is a decision on the paper styled "PETITION TO ACCORD THE PROPER FILING DATE" filed June 12, 2003, requesting that the above-identified application be accorded a filing date of March 12, 2003, rather than the presently accorded filing date of March 13, 2003.

Applicants allege that the application was deposited in "Express Mail" service with the U.S. Postal Service, on March 12, 2003. Applicants request that the application be accorded a filing date of March 12, 2003. A review of the record discloses that the filing date has already been changed from March 13, 2003 to March 12, 2003, and a corrected Filing Receipt was mailed on June 27, 2003.

The petition is dismissed as moot.

No petition fee is required and none has been charged.

Telephone inquiries specific to this matter should be directed to Wan Laymon at (703) 306-5685.

Brian Hearn
Senior Petitions Examiner
Office of Petitions
Office of the Deputy Commissioner
for Patent Examination Policy

UNITED STATES PATENT AND TRADEMARK OFFICE

Commissioner for Patents
United States Patent and Trademark Office
P.O. Box 1450
Alexandria, VA 22313-1450
www.uspto.gov

BENESCH, FRIEDLANDER, COPLAN & ARONOFF LLP
ATTN: IP DEPARTMENT DOCKET CLERK
2300 BP TOWER
200 PUBLIC SQUARE
CLEVELAND OH 44114

COPY MAILED

JUN 0 6 2008

In re Application of	:	
Craig T. Walters et al	:	
Application No. 10/386,644	:	DECISION ON PETITION
Filed: March 12, 2003	:	
Attorney Docket No. MN-01	:	

This is a decision on the request for reconsideration, filed July 27, 2007, which is being treated as a petition under 37 CFR 1.8(b), requesting withdrawal of the holding of abandonment in the above-identified application. This is also a decision on the petition to revive under 37 CFR 1.137(b), filed September 14, 2007.

The petition under 37 CFR 1.8(b) is **GRANTED**.

The petition under 37 CFR 1.137(b) is **DISMISSED** as Moot.

This application was held abandoned for failure to timely respond to the Office action of August 5, 2005, which set a three (3) month shortened statutory period for reply. Accordingly, a reply was due on or before November 5, 2006.

Petitioner states that a timely reply was mailed via certificate of mailing on February 6, 2006 (February 5, 2006 being a Sunday), which included the following papers: An amendment and extension of time. The file record does include the originally submitted papers, which bears a certificate of mailing dated February 6, 2006, which would render the reply timely.

Failure to receive correspondence which includes a certificate of mailing or certificate of facsimile transmission is addressed in 37 CFR 1.8(b), reproduced below:

> In the event that correspondence is considered timely filed by being mailed or transmitted in accordance with paragraph (a) of this section, but not received in the U.S. Patent and Trademark Office after a reasonable amount of time has elapsed from the time of mailing or transmitting of the correspondence, or after the application is held to be abandoned, or after the proceeding is dismissed, terminated, or decided with prejudice, the correspondence will be considered timely if the party who forwarded such correspondence:
>
> (1) Informs the Office of the previous mailing or transmission of the correspondence promptly after becoming aware that the Office has no evidence of receipt of the correspondence;
>
> (2) Supplies an additional copy of the previously mailed or transmitted correspondence and certificate; and
>
> (3) Includes a statement which attests on a personal knowledge basis or to the satisfaction of the Director to the previous timely mailing or transmission. If the correspondence was sent by facsimile transmission, a copy of the sending unit's report confirming transmission may be used to support this statement.

The petition satisfies the above requirements of 37 CFR 1.8(b). Accordingly, the holding of abandonment for failure to timely file a reply to the Office action of August 5, 2005, is hereby withdrawn and the application restored to pending status.

The petition to revive filed September 14, 2007 is dismissed as moot in view of the granting of the petition to withdraw holding of abandonment filed July 27, 2007. Petitioner may request a refund of the petition fee by writing to the Office of Finance, Refund Section. A copy of this decision should accompany the request.

This application is being referred to Technology Center AU 3641 for appropriate action in the normal course of business on the reply received February 10, 2006.

Karen Creasy

Karen Creasy
Petitions Examiner
Office of Petitions

UNITED STATES PATENT AND TRADEMARK OFFICE

Commissioner for Patents
United States Patent and Trademark Office
P.O. Box 1450
Alexandria, VA 22313-1450
www.uspto.gov

BENJAMEN E. KERN
6352 SCIOTO DARBY CREEK RD., PMB 207
HILLIARD OH 43026

MAILED

JUN 07 2010

OFFICE OF PETITIONS

In re Application of
Craig T. Walters et al.
Application No. 10/386,644
Filed: March 12, 2003
Attorney Docket No.: LMN-O1

ON PETITION

This is a decision on the petition filed March 23, 2010 under 37 CFR 1.181 to withdraw the holding of abandonment or in the alternative under 37 CFR 1.137(b),[1] to revive the above-identified application.

The petition under 37 CFR 1.181 is **DISMISSED**.
The petition under 37 CFR 1.137(b) is **GRANTED**.

This application became abandoned February 18, 2010 for failure to timely pay the issue fee in response to the Notice of Allowance mailed November 17, 2009 which set a three month statutory period for response. Accordingly, the Notice of Abandonment was mailed on March 10, 2010.

Petitioner argues that when the Second Notice of Allowance was received February 17, 2010, on the due date of the issue fee and publication fee payment, Applicants understood that they had an additional three months to pay those fees. 37 C.F.R. § 1.311(a). As such, Applicants tended to the submission of the corrected application papers and the fee payments at the same time, and in due course, filing the corrected application papers and paying the fees on February 24, 2010. In view thereof, the issue fee was not timely filed

---

[1]Effective December 1, 1997, the provisions of 37 CFR 1.137(b) now provide that where the delay in reply was unintentional, a petition may be filed to revive an abandoned application or a lapsed patent pursuant to 37 CFR 1.137(b). A grantable petition filed under the provisions of 37 CFR 1.137(b) must be accompanied by:

(1) the required reply, unless previously filed. In a nonprovisional application abandoned for failure to prosecute, the required reply may be met by the filing of a continuing application. In a nonprovisional application filed on or after June 8, 1995, and abandoned for failure to prosecute, the required reply may also be met by the filing of a request for continued examination in compliance with § 1.114. In an application or patent, abandoned or lapsed for failure to pay the issue fee or any portion thereof, the required reply must be the payment of the issue fee or any outstanding balance thereof. In an application abandoned for failure to pay the publication fee, the required reply must include payment of the publication fee.

(2) the petition fee as set forth in 37 CFR 1.17(m);

(3) a statement that the entire delay in filing the required reply from the due date for the reply until the filing of a grantable petition pursuant to 37 CFR 1.137(b) was unintentional. The Commissioner may required additional information where there is a question whether the delay was unintentional; and

(4) any terminal disclaimer (and fee as set forth in 37 CFR 1.20(d)) required pursuant to 37 CFR 1.137(c)).

in response to the Notice of Allowance mailed November 17, 2009.

Petitioners are advised that if an Office communication is mailed and that in the absence of that communication not being withdrawn by the USPTO, then by law a response is required. The failure to file a response causes the application to become abandoned, even if that communication was sent in error. Applicants are not afforded an opportunity to withhold a response to an office communication based on a perceived error on the part of the agency.

This application properly became abandoned February 18, 2010 for failure to file a timely reply to the Notice of Allowance mailed November 17, 2009 and therefore the Notice of Abandonment mailed March 10, 2010 was appropriate.

In view thereof, the holding of abandonment will not be withdrawn.

With respect to the petition to revive, the petition fee in the amount of $810.00 has been charged to the credit card provided.

All other requirements under 37 CFR 1.137(b) having been met, this matter is being referred to the Publishing Division.

Telephone inquiries concerning this matter may be directed to the undersigned Petitions Attorney at (571) 272-3212.

Patricia Faison-Ball

Patricia Faison-Ball
Senior Petitions Attorney
Office of Petitions

UNITED STATES PATENT AND TRADEMARK OFFICE

UNITED STATES DEPARTMENT OF COMMERCE
United States Patent and Trademark Office
Address: COMMISSIONER FOR PATENTS
P.O. Box 1450
Alexandria, Virginia 22313-1450
www.uspto.gov

Terry W. Kramer, Esq.
Kramer & Amado, P.C.
1725 Duke Street, Suite 240
Alexandria, VA 22314

Mail Date: 06/22/2010

Applicant	: Mark Thibodeau	: DECISION ON REQUEST FOR
Patent Number	: 7636307	: RECALCULATION of PATENT
Issue Date	: 12/22/2009	: TERM ADJUSTMENT IN VIEW
Application No	: 10/386,651	: OF WYETH AND NOTICE OF INTENT TO
Filed	: 03/13/2003	: ISSUE CERTIFICATE OF CORRECTION
		:

The Request for Recalculation is **GRANTED** to the extent indicated.

The patent term adjustment has been determined to be **1913** days. The USPTO will *sua sponte* issue a certificate of correction reflecting the amount of PTA days determined by the recalculation.

Prior to the issuance of the certificate of correction, the USPTO will afford patentee an opportunity to be heard and request reconsideration. Accordingly, patentee has **one month or thirty (30) days**, whichever is longer, to file a request for reconsideration of this patent term adjustment calculation. See 35 U.S.C. 154(b)(3)(B)(ii) and 37 CFR 1.322(a)(4). No extensions of time will be granted under 37 CFR 1.136.

Patentee should use document code PET.OP if electronically filing a request for reconsideration of this patent term adjustment calculation. The patentee must also include the information required by 37 CFR 1.705(b)(2) and the fee required by 37 CFR 1.18(e). If patentee does not file a timely request for reconsideration of this patent term adjustment calculation including the information required by 37 CFR 1.705(b)(2) and the fee required by 37 CFR 1.18(e), the USPTO will issue a certificate of correction reflecting the PTA determination noted above.

Patentee should be aware that in order to preserve the right to review in the United States District Court for the District of Columbia of the USPTO patent term adjustment determination, patentee must ensure that he or she also take the steps required under 35 U.S.C. 154(b)(4)(A) in a timely manner. Nothing in the request for recalculation should be construed as providing an alternative time frame for commencing a civil action under 35 U.S.C. 154(b)(4)(A).

Any questions concerning this decision should be directed to the Office of Patent Legal Administration at 571-272-7702.

UNITED STATES PATENT AND TRADEMARK OFFICE

COMMISSIONER FOR PATENTS
UNITED STATES PATENT AND TRADEMARK OFFICE
P.O. BOX 1450
ALEXANDRIA, VA 22313-1450
www.uspto.gov

Paper No.

STAAS & HALSEY LLP
SUITE 700
1201 NEW YORK AVENUE, N.W.
WASHINGTON DC 20005

COPY MAILED

FEB 16 2007

OFFICE OF PETITIONS

In re Application of :
Akasaka et al. : DECISION ON PETITION
Application No. 10/386,659 :
Filed: March 13, 2003 :
Attorney Docket No. 1095.1268 :

This is in response to the PETITION FOR WITHDRAWAL OF HOLDING OF ABANDONMENT UNDER 37 C.F.R. § 1.181(a) filed December 11, 2006.

The petition under 37 CFR § 1.181 is **DISMISSED**.

Any request for reconsideration pursuant to § 1.181 must be filed within **TWO (2) MONTHS** of the date of this decision in order to be considered timely. See 37 CFR §1.181(f).

The above-identified application became abandoned for failure to timely pay the issue fee and publication fee within the three-month statutory period set in the Notice of Allowance and Fee(s) Due mailed July 10, 2006. No reply having been received, the above-identified application became abandoned on October 11, 2006. A courtesy Notice of Abandonment was mailed on November 15, 2006.

In response, applicants filed the instant petition, asserting that attorney for applicants did not receive the Notice of Allowance.

A review of the application file reveals no irregularities in the mailing of the Notice mailed July 10, 2006. Thus, there is a strong presumption that the correspondence was properly mailed to the applicant at the correspondence address of record. In the absence of demonstrated irregularities in mailing of this

Notice, petitioner must submit evidence to overcome this presumption. The showing required to establish non-receipt of an Office communication must include a statement from the practitioner (or applicant) stating that the Office communication was not received by the practitioner (or applicant) and attesting to the fact that a search of the file jacket and docket records indicates that the Office communication was not received. In addition, a copy of the docket record where the non-received Office communication would have been entered had it been received and docketed must be attached to and referenced in practitioner's statement.

The petition includes an assertion by the practitioner that the Notice was not received and that a search of the file jacket and docket records indicates that the Office Action was not received. However, the petition does not include any docket records, or other evidence consistent with such docket records, to show that the Notice was not received. In view thereof, the petition must be dismissed.

If applicants cannot provide persuasive evidence of non-receipt of the Notice, applicants may submit a petition to revive pursuant to § 1.137.

Further correspondence with respect to this decision should be addressed as follows:

By mail: Mail Stop Petition
Commissioner for Patents
P.O. Box 1450
Alexandria, VA 22313-1450

By fax: (571) 273-8300
ATTN: Office of Petitions

By hand: Customer Service Window
Randolph Building
401 Dulany Street
Alexandria, VA 22314

Telephone inquiries concerning this decision should be directed to the undersigned at (571) 272-3219.

Nancy Johnson
Senior Petitions Attorney
Office of Petitions

UNITED STATES PATENT AND TRADEMARK OFFICE

COMMISSIONER FOR PATENTS
UNITED STATES PATENT AND TRADEMARK OFFICE
P.O. BOX 1450
ALEXANDRIA, VA 22313-1450
www.uspto.gov

Paper No.

STAAS & HALSEY LLP
SUITE 700
1201 NEW YORK AVENUE, N.W.
WASHINGTON DC 20005

COPY MAILED

JUL 03 2007

OFFICE OF PETITIONS

In re Application of :
Akasaka et al. : DECISION ON PETITION
Application No. 10/386,659 :
Filed: March 13, 2003 :
Attorney Docket No. 1095.1268 :

This is a decision on the REQUEST FOR RECONSIDERATION OF DISMISSAL OF APPLICANT'S PETITION FOR WITHDRAWAL OF HOLDING OF ABANDONMENT filed March 22, 2007.

The above-identified application became abandoned for failure to timely pay the issue fee and publication fee within the three-month statutory period set in the Notice of Allowance and Fee(s) Due mailed July 10, 2006. By decision mailed February 26, 2007, the initial PETITION FOR WITHDRAWAL OF HOLDING OF ABANDONMENT UNDER 37 C.F.R. § 1.181(a) filed December 11, 2006 was dismissed. Petitioner's showing of non-receipt of the Notice of Allowance did not include a copy of the docket record where the non-received Office communication would have been entered had it been received and docketed.

On instant renewed petition, petitioner submitted the required docket records. Preliminarily, it is noted that the petition includes persuasive evidence by way of an itemized and date-stamped postcard receipt showing that the petition as originally filed on December 11, 2006 included the docket records. Accordingly, it is noted that there was no omission in the petition within the meaning of 37 CFR 1.704(c)(7).

With respect to the merits of the petition, given the resubmission of the docket records, petitioner has now supported his claim of non-receipt with the proper showing.

In view thereof, the notice of abandonment mailed November 15, 2006 is hereby **VACATED**, and the holding of abandonment is hereby **WITHDRAWN**.

The petition under § 1.181 is **GRANTED**.

No fee is required on petition under § 1.181.

Technology Center AU 2115 has been advised of this decision. The application file is, thereby, forwarded to the Technology Center's technical support staff to withdraw the holding of abandonment and for re-mailing of the Notice of Allowance (and Notice of Allowability) mailed July 10, 2006 and for restarting of the periods for reply to both Notices.

Telephone inquiries concerning this decision should be directed to the undersigned at (571) 272-3219.

Nancy Johnson
Senior Petitions Attorney
Office of Petitions

SPE RESPONSE FOR CERTIFICATE OF CORRECTION

Paper No.: _____

DATE : 11-6-06

TO SPE OF : ART UNIT 2800

SUBJECT : Request for Certificate of Correction on Patent No.: 6907114 B2 (10/386668

A response is requested with respect to the accompanying request for a certificate of correction.

Please complete this form and return with file, within **7** days to:
Palm location **7580, Certificates of Correction Branch – South Tower – 9A22**
If response is for an IFW, **return to employee (named below) via PUBSCofC Team in MADRAS.**
With respect to the change(s) requested, correcting Office and/or Applicant's errors, should the patent read as shown in the certificate of correction (COCIN)? No new matter should be introduced, nor should the scope or meaning of the claims be changed.

Continuation Data

Thank You For Your Assistance

Eva James

Certificates of Correction Branch
Tel. No. 703-305-8309

The request for issuing the above-identified correction(s) is hereby:
Note your decision on the appropriate box.

- ☑ **Approved** — **All** changes apply.
- ☐ **Approved in Part** — Specify below which changes **do not** apply.
- ☐ **Denied** — State the reasons for denial below.

Comments:

Wing Fan Chan
SPE

2616
Art Unit

UNITED STATES PATENT AND TRADEMARK OFFICE

COMMISSIONER FOR PATENTS
UNITED STATES PATENT AND TRADEMARK OFFICE
P.O. BOX 1450
ALEXANDRIA, VA 22313-1450
www.uspto.gov

OGILVY RENAULT LLP
1981 MCGILL COLLEGE AVENUE
SUITE 1600
MONTREAL QC H3A2Y-3 CA
CANADA

COPY MAILED
SEP 14 2005
OFFICE OF PETITIONS

In re Patent No. 6,848,973 :
Issue Date: February 1, 2005 :
Application No. 10/386,703 : ON PETITION
Filed: March 13, 2003 :
Docket No. 16323-1US PM/DP/II :

This is a decision on the "REQUEST TO CORRECT ASSIGNEE UNDER 37 CFR 3.81(b)," filed May 4, 2005, requesting issuance of a certificate of correction to issue in the name of "BELLEMARE DES FORGES INC."

Petitioner requests issuance of a certificate of correction of assignee data in the name of "BELLEMARE DES FORGES INC."

The Office will issue a certificate of correction to correct an error on the part of an applicant in those cases where the assignee or attorney data is incorrect or was inadvertently not provided at the time of payment of the issue fee or the inventor's name is misspelled or otherwise incorrect. The Office will issue a certificate of correction in such instances provided the required petition fee and certificate of correction fee are paid.

The required petition fee of $130.00 and certificate of correction fee of $100.00 have been charged to petitioner's deposit account as authorized in the instant petition.

Accordingly, the instant request is hereby **GRANTED**.

This application is being forwarded to the Certificate of Correction Branch for issuance of the requested certificate of correction.

Telephone inquiries regarding this decision should be directed to the undersigned at (571) 272-3205.

Alesia M. Brown
Petitions Attorney
Office of Petitions

UNITED STATES PATENT AND TRADEMARK OFFICE

COMMISSIONER FOR PATENTS
UNITED STATES PATENT AND TRADEMARK OFFICE
WASHINGTON, DC 20231
www.uspto.gov

Paper No. 5

MAIL

AUG - 1 2003

DIRECTOR OFFICE
TECHNOLOGY CENTER 2600

FISH & RICHARDSON P.C.
45 ROCKEFELLER PLAZA, SUITE 2800
NEW YORK NY 10111

In re Application of	:	DECISION ON REQUEST TO WITHDRAW AS ATTORNEY
SUAREZ, ANTHONY P.	:	
Application No. 10/386,730	:	
Filed: March 12, 2003	:	
For: IMAGE PROCESSING APPARATUS, IMAGE PROCESSING METHOD, PROGRAM AND RECORDING MEDIUM	:	

This is a decision on the Request to Withdraw as Attorney/Agent of record filed on June 20, 2003.

A grantable request to withdraw as attorney/agent of record must do the following:
(1) indicate the present mailing address of the attorney(s)/agent(s) who seek(s) to withdraw, and
(2) be signed by each attorney/agent seeking to withdraw or clearly be signed on their behalf, and
(3) be *approved* at least thirty (30) days prior to the maximum extendable period for response to any outstanding Office Action, and
(4) indicate the address to which future correspondence should be mailed.

Petitioner has met all of the above. Accordingly, the request is **GRANTED**.

All of the attorneys/agents listed in the Request are withdrawn. The following attorneys/agents remain of record:
Stephan J. Filipek
Andrew N. Parfomak

All future communications from the Office will be directed to the address listed below until otherwise notified by applicant. Applicant is reminded of the obligation to promptly notify the Patent and Trademark Office of any change in correspondence address to ensure receipt of all communications from the Office.

Kenneth Wieder
Special Program Examiner
Technology Center 2600
Communications
(703) 305-4710

cc: MR. THOMAS J. D'AMICO
DICKSTEIN, SHAPIRO, MORIN, & OSHINSKY LLP
2101 L STREET NW
WASHINGTON, DC 20037-1526

UNITED STATES PATENT AND TRADEMARK OFFICE

Commissioner for Patents
United States Patent and Trademark Office
P.O. Box 1450
Alexandria, VA 22313-1450
www.uspto.gov

OCT 13 2004

DIWORTH & BARRESE, LLP
333 EARLE OVINGTON BLVD
UNIONDALE, NY 11553

In re Application of	:
Mathew R. Pincus	:
Serial No.: 10/386,737	: PETITION TO MAKE SPECIAL
Filed: 12 March 2003	:
Attorney Docket No: 1181-17 CIP	:

This is in response to applicant's petition filed August 12, 2004, to make the above-identified application special under the provisions of 37 CFR 1.102(b).

Applicant has satisfied the provisions set forth in M.P.E.P. 708.02, section X. Therefore the petition is **GRANTED**.

The application will be forwarded to the examiner for action on the merits commensurate with this decision.

Should there be any questions with regard to this letter please contact Jean F. Vollano by letter addressed to the Director, Technology Center 1600, PO BOX 1450, ALEXANDRIA, VA 22313-1450, or by telephone at 571-272-0648 or by facsimile transmission to the general Office facsimile number 703-872-9306.

Jean F. Vollano

Jean F. Vollano
Special Program Examiner
Technology Center 1600

UNITED STATES PATENT AND TRADEMARK OFFICE

Commissioner for Patents
United States Patent and Trademark Office
P.O. Box 1450
Alexandria, VA 22313-1450
www.uspto.gov

FITCH, EVEN, TABIN & FLANNERY
120 SO. LASALLE STREET, SUITE 1600
CHICAGO, IL 60603-3406

COPY MAILED
JUL 13 2006
OFFICE OF PETITIONS

In re Application of

Parsadayan, et al

Application No. 10/386,758

Filed: March 11, 2003

Attorney Docket No. 2019.300.353

DECISION ON PETITION

This is a decision on the petition under 37 CFR 1.181(a) to withdraw the holding of abandonment, filed May 8, 2006.

The petition under 37 CFR 1.181(a) to withdraw the holding of abandonment is **granted**.

This application was held abandoned on January 20, 2006, after it was believed that no response was received to the non-final Office action mailed October 19, 2005. The notice allowed a shortened statutory period for reply of three (3) months from its mailing date. Extensions of the time set for reply were available pursuant to 37 CFR 1.136(a). A Notice of Abandonment was mailed on April 24, 2006, indicating that a reply to the non-final Office action was not received.

A review of the record did reveal an amendment filed April 25, 2006, that was responsive to the non-final Office. The amendment contained a certificate of mailing dated April 19, 2006, and was accompanied by a request for an extension of time within the third month. Pursuant to 37 CFR 1.8, the amendment and request for an extension of time within the third month are recognized as having been received on April 19, 2006, which is within the maximum statutory period allowed for response to the non-final Office action. Based on the aforementioned, it appears that the application was improperly held abandoned as a response was received prior to expiration of the maximum statutory period for reply. The holding of abandonment is withdrawn, accordingly.

Further inquires regarding this decision may be directed to the undersigned at (571) 272-3222.

The application file is being forwarded Technology Center 2800, GAU 2837, for further processing, including entry of the amendment filed April 24, 2006 (certificate of mailing dated April 19, 2006.)

Kenya A. McLaughlin

Kenya A. McLaughlin
Petitions Attorney
Office of Petitions

UNITED STATES PATENT AND TRADEMARK OFFICE

Commissioner for Patents
United States Patent and Trademark Office
P.O. Box 1450
Alexandria, VA 22313-1450
www.uspto.gov

JOSEPH S. TRIPOLI
THOMSON MULTIMEDIA LICENSING, INC.
2 INDEPENDENCE WAY
P.O. BOX 5312
PRINCETON NJ 08543-5312

COPY MAILED
JUL 27 2006
OFFICE OF PETITIONS

In re Application of :
Johnson, et al. :
Application No. 10/386,767 : ON PETITION
Filed: March 12, 2003 :
Attorney Docket No. PU030027 :
For: CHANGE REQUEST FORM
ANNOTATION

This is a decision on the petition filed May 18, 2006 (certificate of mailing date May 15, 2006), entitled, "PETITION UNDER 37 CFR 1.47(A) FILING WHEN INVENTOR CANNOT BE REACHED." The petition will be treated as a petition under CFR 1.183, requesting waiver of 37 CFR 1.63 and 1.67, which requires all of the joint inventors to execute a supplemental declaration.[1]

The petition under 37 CFR 1.183 to waive 37 CFR 1.63 and 1.67 is **DISMISSED**.

The petition under 37 CFR 1.47(a) is **DISMISSED AS MOOT**.

Any request for reconsideration of this decision must be submitted within TWO (2) MONTHS from the mail date of this decision. Extensions of time under 37 CFR 1.136(a) are permitted. Any response should be entitled "Request for Reconsideration of Petition Under 37 CFR 1.183 to waive 37 CFR 1.63 and 1.67" and may include an oath or declaration executed by the inventor. **Failure to respond will result in abandonment of the application.**

While this waiver petition is not a petition under 37 CFR 1.47, it is evaluated in much the same way a Rule 47 petition is. Therefore, a grantable petition requires:

(1) a petition including proof of the pertinent facts establishing that the joint inventor(s) refuses to join, or cannot be found or reached after diligent effort,

[1] Once an application has received a fully executed oath or declaration and been placed on the files for examination, the provisions of 37 CFR 1.47 no longer apply. Rather, the remedy for treating an inventor's refusal or unavailability to sign a supplemental oath or declaration is waiver of 37 CFR 1.67. See MPEP 603.

(2) a proper oath or Declaration executed by the available joint inventor(s),
(3) a petition fee, and
(4) the last known address of the omitted inventor(s).

This petition lacks items (1) and (2).

With respect to item (1), Applicants have failed to establish that the non-signing inventor, Eric Scott Roberts, cannot be located. The petition shows that a multiple deliveries of a package containing the application papers and a supplemental declaration to Mr. Roberts' last known address were attempted. The deliveries were unsuccessful because a signature was required for delivery. Mr. Roberts' last known telephone number was disconnected, information service for Duluth, GA had no phone number for Mr. Roberts and an Internet white page search for Mr. Roberts' phone number in Duluth, GA was fruitless. Mr. Robert's current e-mail address is unknown.

A showing of **diligence** is critical in obtaining Rule 47 status when an inventor cannot be located or reached.

As a preliminary matter, petitioners are informed that e-mailing is generally not accepted as a means to communicate with non-signing inventors. This is because the Office cannot know definitely if the message was received; people are not as careful in deleting e-mails as they are in throwing out mail as shown by bulk folder deletions and the fact that some people might not check e-mails frequently; the Office does not know if the recipient has the program to open the specific attachment; and PTO guidelines regarding accepting e-mail reflects the fact that the Office does not have the same confidence in e-mail as it does in USPS service.

The Office typically requires documentary evidence of successful e-mailing in the form of a response e-mail from the non-signing inventor in which the inventor acknowledges receipt of the e-mail and his ability to read the attachments. Thus, even if petitioners knew Mr. Roberts' current e-mail address, sending an e-mail alone would not be sufficient.

Petitioners should engage in further efforts to locate Mr. Roberts expanding the field of search beyond Duluth, Georgia. Petitioners should search for Mr. Roberts within a reasonable geographic proximity of Georgia. The following is a list of evidentiary sources that are commonly relied upon to prove inability to locate an inventor: searches of Internet databases; inquiries of local telephone directories; telegrams; and documented inquiries of last known employers. Every listed type of search need not be done. However, a diligent effort to find the inventor must be made.

Documentary evidence that supports a finding that the non-signing inventor could not be found or reached should be made part of any affidavits or declarations that fully describe the exact facts which are relied on to establish that a diligent effort was made to locate the non-signing inventor. Printed computer records of Internet searches would suffice.

The affidavit or declaration of facts must be signed, where at all possible, by a person having *firsthand knowledge* of the facts recited therein. Statements based on hearsay will not normally

be accepted. It is important that the affidavit or declaration contain statements of fact as opposed to conclusions.

As to item (2), an oath or declaration for the patent application in compliance with 37 CFR 1.63 and 1.64 still has not been presented. The citizenship of non-signing inventor Roberts is not included on the declaration. The citizenship of each inventor must be included on the oath or declaration. As listing the citizenship for each inventor is a statutory requirement under 35 U.S.C. 115, it cannot be waived.

The signing inventors must execute another declaration that contains the signers' own information and lists Mr. Roberts' information, including citizenship.

Regarding fees, petitioners submitted $200.00. The current Rule 183 petition fee is $400.00. Accordingly, deposit account no. 07-0832 will be charged the $200.00 balance due.

Further correspondence with respect to this matter should be addressed as follows:

By mail:
Mail Stop PETITION
Commissioner for Patents
Post Office Box 1450
Alexandria, VA 22313-1450

By hand:
U.S. Patent and Trademark Office
Customer Service Window, Mail Stop Petition
Randolph Building
401 Dulany Street
Alexandria, VA 22314

By FAX: (571) 273-8300 - ATTN: Office of Petitions

Telephone inquiries should be directed to the undersigned at (571) 272-3230.

Shirene Willis Brantley

Shirene Willis Brantley
Senior Petitions Attorney
Office of Petitions

UNITED STATES PATENT AND TRADEMARK OFFICE

Commissioner for Patents
United States Patent and Trademark Office
P.O. Box 1450
Alexandria, VA 22313-1450
www.uspto.gov

JOSEPH S. TRIPOLI
THOMSON MULTIMEDIA LICENSING, INC.
2 INDEPENDENCE WAY
P.O. BOX 5312
PRINCETON NJ 08543-5312

COPY MAILED

NOV 22 2006

OFFICE OF PETITIONS

In re Application of
Johnson, et al.
Application No. 10/386,767
Filed: March 12, 2003
Attorney Docket No. PU030027
For: CHANGE REQUEST FORM ANNOTATION

ON PETITION

This is a decision on the reconsideration petition, filed August 11, 2006, under 37 CFR 1.183, requesting waiver of 37 CFR 1.63 and 1.67, which requires all of the joint inventors to execute a supplemental declaration.

The petition under 37 CFR 1.183 to waive 37 CFR 1.63 and 1.67 is **DISMISSED AS MOOT**.

Previously non-signing inventor, Eric Scott Roberts, has executed the supplemental declaration.

After the mailing of this decision, the application will be returned to Technology Center A.U 2113 for consideration of the amendment filed on November 3, 2006.

Telephone inquiries should be directed to the undersigned at (571) 272-3230.

Shirene Willis Brantley
Senior Petitions Attorney
Office of Petitions

UNITED STATES PATENT AND TRADEMARK OFFICE

Commissioner for Patents
United States Patent and Trademark Office
P.O. Box 1450
Alexandria, VA 22313-1450
www.uspto.gov

Paper No.

COPY MAILED

DEC 1 0 2008

OFFICE OF PETITIONS

THE DIRECTV GROUP, INC.
PATENT DOCKET ADMINISTRATION
CA / LA1 / A109
2230 E. IMPERIAL HIGHWAY
EL SEGUNDO CA 90245

In re Application of	:	
John P. Godwin	:	
Application No. 10/386,772	:	DECISION ON PETITION
Filed: March 12, 2003	:	PURSUANT TO
Attorney Docket No.: PD-201069	:	37 C.F.R. § 1.181(A)
Title: ADAPTATION OF DIAL-UP	:	
DEVICES TO BROADBAND FACILITIES	:	

This is a decision on the petition filed November 19, 2008, pursuant to 37 C.F.R. § 1.181(a), requesting that the holding of abandonment in the above-identified application be withdrawn.

This petition pursuant to 37 C.F.R. § 1.181(a) is **DISMISSED**.

Receipt of the concurrently submitted Request for Continued Examination (RCE), the associated fee, and an amendment is acknowledged.

BACKGROUND

The above-identified application became abandoned for failure to reply within the meaning of 37 C.F.R § 1.113 in a timely manner to the final Office action mailed May 6, 2008, which set a shortened statutory period for reply of three months. No extensions of time under the provisions of 37 C.F.R § 1.136(a) were obtained, and no response was received. Accordingly, the above-identified application became abandoned on August 7, 2008.

RELEVANT PORTIONS OF THE C.F.R. AND MPEP

37 C.F.R. § 1.134 sets forth, *in toto*:

> An Office action will notify the applicant of any non-statutory or shortened statutory time period set for reply to an Office action. Unless the applicant is notified in writing that a reply is required in less than six months, a maximum period of six months is allowed.

37 C.F.R. § 1.135 sets forth, *in toto*:

> (a) If an applicant of a patent application fails to reply within the time period provided under § 1.134 and § 1.136, the application will become abandoned unless an Office action indicates otherwise.
> (b) Prosecution of an application to save it from abandonment pursuant to paragraph (a) of this section must include such complete and proper reply as the condition of the application may require. The admission of, or refusal to admit, any amendment after final rejection or any amendment not responsive to the last action, or any related proceedings, will not operate to save the application from abandonment.
> (c) When reply by the applicant is a bona fide attempt to advance the application to final action, and is substantially a complete reply to the non-final Office action, but consideration of some matter or compliance with some requirement has been inadvertently omitted, applicant may be given a new time period for reply under § 1.134 to supply the omission.

Section 711.03(c)(I)(A) of the MPEP sets forth, *in toto*:

> In *Delgar v. Schulyer*, 172 USPQ 513 (D.D.C. 1971), the court decided that the Office should mail a new Notice of Allowance in view of the evidence presented in support of the contention that the applicant's representative did not receive the original Notice of Allowance. Under the reasoning of *Delgar*, an allegation that an Office action was never received may be considered in a petition to withdraw the holding of abandonment. If adequately supported, the Office may grant the petition to withdraw the holding of abandonment and remail the Office action. That is, the reasoning of Delgar is applicable regardless of whether an application is held abandoned for failure to timely pay the issue fee (35 U.S.C. 151) or for failure to prosecute (35 U.S.C. 133).
>
> To minimize costs and burdens to practitioners and the Office, the Office has modified the showing required to establish nonreceipt of an Office action. **The showing required to establish nonreceipt of an Office communication must include a statement from the practitioner describing the system used for recording an Office action received at the correspondence address of record with the USPTO. The statement should establish that the docketing system is sufficiently reliable.** It is expected that the record would include, but not be limited to, the application number, attorney

> docket number, the mail date of the Office action and the due date for the response.
>
> Practitioner must state that the Office action was not received at the correspondence address of record, and that **a search of the practitioner's record(s), including any file jacket or the equivalent, and the application contents, indicates that the Office action was not received. A copy of the record(s) used by the practitioner where the non-received Office action would have been entered had it been received is required.**
>
> A copy of the practitioner's record(s) required to show non-receipt of the Office action should include the master docket for the firm. That is, if a three month period for reply was set in the nonreceived Office action, a copy of the master docket report showing all replies docketed for a date three months from the mail date of the nonreceived Office action must be submitted as documentary proof of nonreceipt of the Office action. If no such master docket exists, the practitioner should so state and provide other evidence such as, but not limited to, the following: the application file jacket; incoming mail log; calendar; reminder system; or the individual docket record for the application in question.
>
> The showing outlined above may not be sufficient if there are circumstances that point to a conclusion that the Office action may have been lost after receipt rather than a conclusion that the Office action was lost in the mail (e.g., if the practitioner has a history of not receiving Office actions).
>
> Evidence of nonreceipt of an Office communication or action (e.g., Notice of Abandonment or an advisory action) other than that action to which reply was required to avoid abandonment would not warrant withdrawal of the holding of abandonment. Abandonment takes place by operation of law for failure to reply to an Office action or timely pay the issue fee, not by operation of the mailing of a Notice of Abandonment. See *Lorenz v. Finkl*, 333 F.2d 885, 889-90, 142 USPQ 26, 29-30 (CCPA 1964); *Krahn v. Commissioner*, 15 USPQ2d 1823, 1824 (E.D. Va 1990); *In re Application of Fischer*, 6 USPQ2d 1573, 1574 (Comm'r Pat. 1988).
>
> (Emphases added).

ANALYSIS

With this petition, Petitioner has stated that the final Office action of May 6, 2008 was not received at the correspondence address of record, and has provided, *inter alia*, a copy of the mail log,[1] the master docket,[2] and a copy of the record used by the practitioner where the allegedly non-received final Office

1 Exhibit D.
2 Exhibits E and F.

action of May 6, 2008 would have been entered had it been received.[3]

Petitioner's assertion of non-receipt has not been adequately supported, as will be now pointed out.

First, Petitioner has failed to either **describe the docketing system** that Petitioner has in place or establish that it is **sufficiently reliable**. Petitioner has not included a statement describing the system used for recording an Office action received at the correspondence address of record with the USPTO.

Second, Petitioner has indicated that the "file[4] and docket records" have been reviewed, and the relevant Office communication was not located.[5] However, the petition is silent as to any search that might have been performed of the **application contents**, in order to determine if the relevant communication was received.

CONCLUSION

The time period for filing a renewed petition is governed by 37 C.F.R. § 1.181(f). Therefore, if reconsideration of this decision is desired, any response to this decision must be submitted within **TWO MONTHS** from the mail date of this decision, and **extensions of time under 37 C.F.R. § 1.136(a) are not permitted**. The reply should include a cover letter entitled "Renewed Petition pursuant to 37 C.F.R. § 1.181(a)". This is not a final agency action within the meaning of 5 U.S.C § 704.

The renewed petition should indicate in a prominent manner that the attorney handling this matter is Paul Shanoski, and may be submitted by mail,[6] hand-delivery,[7] or facsimile.[8] Registered users of EFS-Web may alternatively submit a response to this decision via EFS-Web.[9]

---

3 Exhibit B.
4 This language is construed as meaning that the file jacket was reviewed. If this is not a correct interpretation of this statement, **Petitioner must notify the Office of the same**.
5 Petition, page 2.
6 Mail Stop Petition, Commissioner for Patents, United States Patent and Trademark Office, P.O. Box 1450, Alexandria, VA, 22313-1450.
7 Customer Window, Randolph Building, 401 Dulaney Street, Alexandria, VA, 22314.
8 (571) 273-8300- please note this is a central facsimile number.
9 https://sportal.uspto.gov/authenticate/authenticateuserlocalepf.html

If responding by mail, Petitioner is advised not to place the undersigned's name on the envelope. Only the information that appears in the footnote should be included - adding anything else to the address will delay the delivery of the response to the undersigned.

Telephone inquiries regarding *this decision* should be directed to the undersigned at (571) 272-3225.[10] All other inquiries concerning examination procedures should be directed to the Technology Center.

/Paul Shanoski/
Paul Shanoski
Senior Attorney
Office of Petitions

10 Petitioner will note that all practice before the Office should be in writing, and the action of the Office will be based exclusively on the written record in the Office. See 37 C.F.R. § 1.2. As such, Petitioner is reminded that no telephone discussion may be controlling or considered authority for any of Petitioner's further action(s).

UNITED STATES PATENT AND TRADEMARK OFFICE

COMMISSIONER FOR PATENTS
UNITED STATES PATENT AND TRADEMARK OFFICE
P.O. BOX 1450
ALEXANDRIA, VA 22313-1450
WWW.USPTO.GOV

Paper No.

THE DIRECTV GROUP, INC.
PATENT DOCKET ADMINISTRATION
CA / LA1 / A109
2230 E. IMPERIAL HIGHWAY
EL SEGUNDO CA 90245

COPY MAILED

FEB 20 2009

OFFICE OF PETITIONS

In re Application of	:	
John P. Godwin	:	
Application No. 10/386,772	:	DECISION ON RENEWED PETITION
Filed: March 12, 2003	:	PURSUANT TO
Attorney Docket No.: PD-201069	:	37 C.F.R. § 1.181(A)
Title: ADAPTATION OF DIAL-UP	:	
DEVICES TO BROADBAND FACILITIES	:	

This is a decision on the renewed petition filed February 6, 2009, pursuant to 37 C.F.R. § 1.181(a), requesting that the holding of abandonment in the above-identified application be withdrawn.

This renewed petition pursuant to 37 C.F.R. § 1.181(a) is **GRANTED**.

BACKGROUND

The above-identified application became abandoned for failure to reply within the meaning of 37 C.F.R § 1.113 in a timely manner to the final Office action mailed May 6, 2008, which set a shortened statutory period for reply of three months. No

extensions of time under the provisions of 37 C.F.R § 1.136(a) were obtained, and no response was received. Accordingly, the above-identified application became abandoned on August 7, 2008.

RELEVANT PORTIONS OF THE C.F.R. AND MPEP

37 C.F.R. § 1.134 sets forth, *in toto*:

> An Office action will notify the applicant of any non-statutory or shortened statutory time period set for reply to an Office action. Unless the applicant is notified in writing that a reply is required in less than six months, a maximum period of six months is allowed.

37 C.F.R. § 1.135 sets forth, *in toto*:

> (a) If an applicant of a patent application fails to reply within the time period provided under § 1.134 and § 1.136, the application will become abandoned unless an Office action indicates otherwise.
> (b) Prosecution of an application to save it from abandonment pursuant to paragraph (a) of this section must include such complete and proper reply as the condition of the application may require. The admission of, or refusal to admit, any amendment after final rejection or any amendment not responsive to the last action, or any related proceedings, will not operate to save the application from abandonment.
> (c) When reply by the applicant is a bona fide attempt to advance the application to final action, and is substantially a complete reply to the non-final Office action, but consideration of some matter or compliance with some requirement has been inadvertently omitted, applicant may be given a new time period for reply under § 1.134 to supply the omission.

Section 711.03(c)(I)(A) of the MPEP sets forth, *in toto*:

> In *Delgar v. Schulyer*, 172 USPQ 513 (D.D.C. 1971), the court decided that the Office should mail a new Notice of Allowance in view of the evidence presented in support of the contention that the applicant's representative did not receive the original Notice of Allowance. Under the reasoning of *Delgar*, an allegation that an Office action was never received may be considered in a petition to withdraw the holding of abandonment. If adequately supported, the Office may grant the petition to withdraw the holding of abandonment and remail the Office action. That is, the reasoning of Delgar is applicable regardless of whether an application is held abandoned for failure to timely pay the issue fee (35 U.S.C. 151) or for failure to prosecute (35 U.S.C. 133).
>
> To minimize costs and burdens to practitioners and the Office, the Office has modified the showing required to establish nonreceipt of an Office action. **The showing required to establish nonreceipt**

of an Office communication must include a statement from the practitioner describing the system used for recording an Office action received at the correspondence address of record with the USPTO. The statement should establish that the docketing system is sufficiently reliable. It is expected that the record would include, but not be limited to, the application number, attorney docket number, the mail date of the Office action and the due date for the response.

Practitioner must state that the Office action was not received at the correspondence address of record, and that **a search of the practitioner's record(s), including any file jacket or the equivalent, and the application contents, indicates that the Office action was not received. A copy of the record(s) used by the practitioner where the non-received Office action would have been entered had it been received is required.**

A copy of the practitioner's record(s) required to show non-receipt of the Office action should include the master docket for the firm. That is, if a three month period for reply was set in the nonreceived Office action, a copy of the master docket report showing all replies docketed for a date three months from the mail date of the nonreceived Office action must be submitted as documentary proof of nonreceipt of the Office action. If no such master docket exists, the practitioner should so state and provide other evidence such as, but not limited to, the following: the application file jacket; incoming mail log; calendar; reminder system; or the individual docket record for the application in question.

The showing outlined above may not be sufficient if there are circumstances that point to a conclusion that the Office action may have been lost after receipt rather than a conclusion that the Office action was lost in the mail (e.g., if the practitioner has a history of not receiving Office actions).

Evidence of nonreceipt of an Office communication or action (e.g., Notice of Abandonment or an advisory action) other than that action to which reply was required to avoid abandonment would not warrant withdrawal of the holding of abandonment. Abandonment takes place by operation of law for failure to reply to an Office action or timely pay the issue fee, not by operation of the mailing of a Notice of Abandonment. See *Lorenz v. Finkl*, 333 F.2d 885, 889-90, 142 USPQ 26, 29-30 (CCPA 1964); *Krahn v. Commissioner*, 15 USPQ2d 1823, 1824 (E.D. Va 1990); *In re Application of Fischer*, 6 USPQ2d 1573, 1574 (Comm'r Pat. 1988).

(Emphases added).

PROCEDURAL HISTORY AND ANALYSIS

An original petition pursuant to 37 C.F.R. § 1.181(a) was filed on November 19, 2008, where Petitioner indicated that the final Office action of May 6, 2008 was not received at the correspondence address of record, and provided, *inter alia*, a

copy of the mail log, the master docket, and a copy of the record used by the practitioner where the allegedly non-received final Office action of May 6, 2008 would have been entered had it been received. The original petition was dismissed via the mailing of a decision on December 10, 2008.

With this renewed petition, Petitioner has described the docketing system that Petitioner has in place and established that it is sufficiently reliable.[1] Petitioner has further indicated that a search of the application contents[2] has indicated that the relevant communication was not received.

CONCLUSION

Considering the facts and circumstances of the delay at issue, as set forth on petition, it is concluded that Petitioner has met his burden of establishing that the Notice of May 6, 2008 was not received.

Accordingly, this renewed petition pursuant to 37 C.F.R. § 1.181(a) is **GRANTED**. The holding of abandonment is **WITHDRAWN**.

Pursuant to this decision, the Office of Patent Publication will be notified of this decision.

It is noted that despite the abandonment and without benefit of a decision granting the original petition, prosecution of this application continued. The Office mailed a notice of allowance on December 17, 2008, despite the fact that this application was abandoned at this time. This petition is being granted to close the gap in prosecution. **Petitioner is advised to submit the issue and publication fees prior to the expiration of the period of time set by the notice of December 17, 2008.**

Petitioner may find it beneficial to view Private PAIR within a fortnight of the present decision to ensure that the withdrawal of the holding of abandonment has been acknowledged by the Office of Patent Publication in response to this decision. It is noted that all inquiries with regard to any failure of that change in status should be directed to the Office of Patent Publication where that change of status must be effected - **the Office of Petitions cannot effectuate a change of status.**

---

1 Renewed petition, pages 2-3.
2 Id. at 3.

Telephone inquiries regarding *this decision* should be directed to the undersigned at (571) 272-3225.[3] All other inquiries concerning the status of the application should be directed to the Office of Patent Publication at 571-272-4200.

/Paul Shanoski/
Paul Shanoski
Senior Attorney
Office of Petitions

---

3 Petitioner will note that all practice before the Office should be in writing, and the action of the Office will be based exclusively on the written record in the Office. See 37 C.F.R. § 1.2. As such, Petitioner is reminded that no telephone discussion may be controlling or considered authority for any further action(s) of Petitioner.

UNITED STATES PATENT AND TRADEMARK OFFICE

Commissioner for Patents
United States Patent and Trademark Office
P.O. Box 1450
Alexandria, VA 22313-1450
www.uspto.gov

WINSTON & STRAWN LLP
PATENT DEPARTMENT
1700 K STREET, N.W.
WASHINGTON DC 20006

COPY MAILED

AUG 09 2007

OFFICE OF PETITIONS

In re Application of Abd. Al-Roof Higazi Application No. 10/386777 Filing or 371(c) Date: 03/12/2003 Attorney Docket Number: 85189-9798	: : : : : :	DECISION ON PETITION

This is a decision on the "PETITION FOR REVIVAL OF AN APPLICATION FOR PATENT ABANDONED FOR FAILURE TO NOTIFY THE OFFICE OF A FOREIGN OR INTERNATIONAL FILING (37 CFR 1.137(f)) filed January 22, 2007.

The petition is **GRANTED**.

Petitioner states that the instant nonprovisional application is the subject of a foreign or international application filed on March 12, 2003. However, the US Patent and Trademark Office was unintentionally not notified of this filing within 45 days subsequent to the filing of the foreign or international application.

In view of the above, this application became abandoned pursuant to 35 U.S.C. 122(b)(2)(B)(iii) and 37 CFR 1.213(c) for failure to timely notify the Office of the filing of an application in a foreign country, or under a multilateral international agreement, that requires publication of applications 18 months after filing.

A petition under 37 CFR 1.137(f) must be accompanied by:

(1) the reply, which is met by the notification of such filing in a foreign country or under a multinational treaty;

(2) the petition fee as set forth in 37 CFR 1.17(m); and

(3) a statement that the entire delay in filing the required reply from the due date of the reply until the filing of a grantable petition was unintentional.

The instant petition has been found to be in compliance with 37 CFR 1.137(f). Accordingly, the failure to timely notify the Office of a foreign or international filing within 45 days after the date

of filing of such foreign or international application as provided by 35 U.S.C. 122(b)(2)(B)(iii) and 37 CFR 1.213(c) is accepted as having been unintentionally delayed.

The previous Request and Certification under 35 U.S.C. 122(b)(2)(B)(i) has been rescinded. A Communication Regarding Rescission of Nonpublication Request and/or Notice of Foreign Filing accompanies this Decision.

The application will be referred to Technology Center AU 1656 for continued processing in due course.

Telephone inquiries regarding this decision should be directed to the undersigned at (571) 272-3232.

Derek L. Woods
Attorney
Office of Petitions

UNITED STATES PATENT AND TRADEMARK OFFICE

Commissioner for Patents
United States Patent and Trademark Office
P.O. Box 1450
Alexandria, VA 22313-1450
www.uspto.gov

GARLICK HARRISON & MARKISON
P.O. BOX 160727
AUSTIN TX 78716-0727

MAILED

JUN 18 2010

OFFICE OF PETITIONS

In re Application of	:
Perlow et al.	:
Application No. 10/386,795	: DECISION ON PETITION
Filed: March 12, 2003	: UNDER 37 CFR 1.78(a)(3)
Attorney Docket No. BP2547	:

This is a decision on the petition under 37 CFR 1.78(a)(3), filed May 3, 2010, to accept an unintentionally delayed claim under 35 U.S.C. § 120 for the benefit of priority to prior-filed nonprovisional applications.

The petition is **DISMISSED**.

A petition for acceptance of a claim for late priority under 37 CFR 1.78(a)(3) is only applicable to those applications filed on or after November 29, 2000. Further, the petition is appropriate only after the expiration of the period specified in 37 CFR 1.78(a)(2)(ii). In addition, the petition under 37 CFR 1.78(a)(3) must be accompanied by:

(1) the reference required by 35 U.S.C. § 120 and 37 CFR 1.78(a)(2)(i) of the prior-filed application(s), unless previously submitted;
(2) the surcharge set forth in § 1.17(t); and
(3) a statement that the entire delay between the date the claim was due under 37 CFR 1.78(a)(2)(ii) and the date the claim was filed was unintentional. The Commissioner may require additional information where there is a question whether the delay was unintentional.

The instant petition does not comply with item (1) above.

With regards to item (1), as required by 37 CFR 1.78(a)(2)(ii), the reference required by 35 U.S.C. 120 must be submitted during the pendency of the instant application. In this case, the instant application was abandoned on February 5, 2010. A Notice of Abandonment was mailed June 10, 2010. Petitioner may consider filing a petition to revive the above-identified application under 37 CFR 1.137(b).

Further, petitioner has requested benefit of Application No. 12/255,182 filed on October 21, 2008. However, the instant application was filed on March 12, 2003 and therefore, no copendency exists between these two applications. The instant application was filed *prior* to the nonprovisional application and therefore cannot claim priority to that application. Copendency between the instant application and the prior application is required. Further, since the applications are not copending, the benefit claims to the other previous prior-filed nonprovisional applications in the chain are improper. Applicant is

required to delete the reference to the prior-filed applications from the first sentence(s) of the specification, unless applicant can establish copendency between the applications.

Accordingly, before the petition under 37 CFR 1.78(a)(3) can be granted, a substitute amendment[1] correcting the above matter, along with a renewed petition under 37 CFR 1.78(a)(6), is required. No further petition fee is necessary.

Additionally, it is not apparent whether the person signing the instant petition was ever given a power of attorney or authorization of agent to prosecute this patent. In accordance with 37 CFR 1.34(a), the signature appearing on the petition shall constitute a representation to the United States Patent and Trademark Office that he/she is authorized to represent the particular party in whose behalf he/she acts.

Further correspondence with respect to this matter should be addressed as follows:

By mail: Mail Stop PETITIONS
Commissioner for Patents
Post Office Box 1450
Alexandria, VA 22313-1450

By hand: Customer Window located at:
U.S. Patent and Trademark Office
Customer Service Window Randolph Building
401 Dulany Street
Alexandria, VA 22314

By fax: (571) 273-8300
ATTN: Office of Petitions

Any questions concerning this matter may be directed to Joan Olszewski at (571) 272-7751.

/Liana Walsh/
Liana Walsh
Petitions Examiner
Office of Petitions

[1] *Note* 37 CFR 1.121

UNITED STATES PATENT AND TRADEMARK OFFICE

COMMISSIONER FOR PATENTS
UNITED STATES PATENT AND TRADEMARK OFFICE
P.O. BOX 1450
ALEXANDRIA, VA 22313-1450
WWW.USPTO.GOV

Paper No.

MAILED

SEP 14 2009

OFFICE OF PETITIONS

BUSKOP LAW GROUP, P.C.
4511 Dacoma Street
HOUSTON TX 77092

In re Application of Roodenburg et al. Application No. 10/386,804 Patent No. 6,926,103 Filed: March 12, 2003 Issued: August 9, 2005 Attorney Docket No. 1141.19 Title: SPLITTABLE BLOCK ON A DERRICK	DECISION ON PETITION PURSUANT TO 37 C.F.R. § 1.28(c)

This is a notice regarding your submission of March 16, 2009, which is properly treated as a request for acceptance of a fee deficiency submission under 37 C.F.R § 1.28(c). On September 1, 1998, the Court of Appeals for the Federal Circuit held that 37 CFR § 1.28(c) is the sole provision governing the time for correction of the erroneous payment of the issue fee as a small entity. See DH Technology v. Synergystex International, Inc. 154 F.3d 1333, 47 USPQ2d 1865 (Fed. Cir. Sept. 1, 1998).

The Office no longer investigates or rejects original or reissue applications under 37 C.F.R. § 1.56. 1098 Off. Gaz. Pat. Office 502 (January 3, 1989). Therefore, nothing in this notice is intended to imply that an investigation was done.

37 C.F.R. § 1.28(c)(2)(ii) sets forth that the party submitting the deficient payment must include:

(a) Each particular type of fee that was erroneously paid as a small entity, (e.g., basic statutory filing fee, two-month extension of time fee) along with the current fee amount for a non-small entity;
(b) The small entity fee actually paid, and when;
(c) The deficiency owed amount (for each fee erroneously paid); and
(d) The total deficiency payment owed, which is the sum or total of the individual deficiency owed amounts set forth in paragraph (c)(2)(ii)(C) of this section.

Petitioner has identified the particular type of fee that was erroneously paid as a small entity, and when the small entity fee was actually paid.

It does not appear that Petitioner has identified the small entity fee that was actually paid, the deficiency owed amount, or the total deficiency payment owed. However, Office records indicate that on February 10, 2009, $ 490 was submitted to the Office. As such, the requirement that Petitioner must provide the Office with the amount of the small entity fee that was actually paid along with the deficiency owed amount and the total deficiency payment owed is waived, *sua sponte*.

Your fee deficiency submission under 37 C.F.R. § 1.28 is hereby accepted. The petition is **GRANTED** accordingly.

This patent is now listed as a large entity.

It is noted that the address listed on the petition differs from the address of record. The application file does not indicate a change of correspondence address has been filed in this case, although the address given on the petition differs from the address of record. If Petitioner desires to receive future correspondence regarding this patent, the change of correspondence address must be submitted.

A courtesy copy of this decision will be mailed to Petitioner. However, all future correspondence will be directed to the address of record until such time as appropriate instructions are received to the contrary. Petitioner will not receive future correspondence related to this patent unless Change of Correspondence Address, Patent Form (PTO/SB/123) is submitted for the above-identified patent. For Petitioner's convenience, a blank Change of Correspondence Address, Patent Form (PTO/SB/123), may be found at http://www.uspto.gov/web/forms/sb0123.pdf.

A blank fee address form may be found at http://www.uspto.gov/web/forms/sb0047.pdf.

Telephone inquiries regarding *this decision* should be directed to the undersigned at (571) 272-3225.[1]

/Paul Shanoski/
Paul Shanoski
Senior Attorney
Office of Petitions

cc: CPI Packages Inc.
414 Hungerford Drive
Third Floor
Rockville, MD 20850

1 Petitioner will note that all practice before the Office should be in writing, and the action of the Office will be based exclusively on the written record in the Office. See 37 C.F.R. § 1.2. As such, Petitioner is reminded that no telephone discussion may be controlling or considered authority for Petitioner's further action(s).

UNITED STATES PATENT AND TRADEMARK OFFICE

UNITED STATES DEPARTMENT OF COMMERCE
United States Patent and Trademark Office
Address: COMMISSIONER FOR PATENTS
P.O. Box 1450
Alexandria, Virginia 22313-1450
www.uspto.gov

APPL NO.	FILING OR 371 (c) DATE	ART UNIT	FIL FEE REC'D	ATTY.DOCKET NO	DRAWINGS	TOT CLMS	IND CLMS
10/386,810	03/05/2003	2141	750	FUJY 20.301	11	8	1

CONFIRMATION NO. 6350

CORRECTED FILING RECEIPT

OC000000011060381

026304
KATTEN MUCHIN ZAVIS ROSENMAN
575 MADISON AVENUE
NEW YORK, NY 10022-2585

Date Mailed: 10/20/2003

Receipt is acknowledged of this regular Patent Application. It will be considered in its order and you will be notified as to the results of the examination. Be sure to provide the U.S. APPLICATION NUMBER, FILING DATE, NAME OF APPLICANT, and TITLE OF INVENTION when inquiring about this application. Fees transmitted by check or draft are subject to collection. Please verify the accuracy of the data presented on this receipt. **If an error is noted on this Filing Receipt, please write to the Office of Initial Patent Examination's Filing Receipt Corrections, facsimile number 703-746-9195. Please provide a copy of this Filing Receipt with the changes noted thereon. If you received a "Notice to File Missing Parts" for this application, please submit any corrections to this Filing Receipt with your reply to the Notice. When the USPTO processes the reply to the Notice, the USPTO will generate another Filing Receipt incorporating the requested corrections (if appropriate).**

Applicant(s)

Satoshi Kumano, Kawasaki, JAPAN;
Hideki Maeda, Kawasaki, JAPAN;

Domestic Priority data as claimed by applicant

This application is a CON of PCT/JP00/06020 09/05/2000

Foreign Applications

If Required, Foreign Filing License Granted: 05/13/2003

Pr jected Publication Date: Not Applicable

Non-Publication Request: No

Early Publication Request: No

Title

Monitoring control network system

Preliminary Class

709

LICENSE FOR FOREIGN FILING UNDER
Title 35, United States Code, Section 184
Title 37, Code of Federal Regulations, 5.11 & 5.15

GRANTED

The applicant has been granted a license under 35 U.S.C. 184, if the phrase "IF REQUIRED, FOREIGN FILING LICENSE GRANTED" followed by a date appears on this form. Such licenses are issued in all applications where the conditions for issuance of a license have been met, regardless of whether or not a license may be required as set forth in 37 CFR 5.15. The scope and limitations of this license are set forth in 37 CFR 5.15(a) unless an earlier license has been issued under 37 CFR 5.15(b). The license is subject to revocation upon written notification. The date indicated is the effective date of the license, unless an earlier license of similar scope has been granted under 37 CFR 5.13 or 5.14.

This license is to be retained by the licensee and may be used at any time on or after the effective date thereof unless it is revoked. This license is automatically transferred to any related applications(s) filed under 37 CFR 1.53(d). This license is not retroactive.

The grant of a license does not in any way lessen the responsibility of a licensee for the security of the subject matter as imposed by any Government contract or the provisions of existing laws relating to espionage and the national security or the export of technical data. Licensees should apprise themselves of current regulations especially with respect to certain countries, of other agencies, particularly the Office of Defense Trade Controls, Department of State (with respect to Arms, Munitions and Implements of War (22 CFR 121-128)); the Office of Export Administration, Department of Commerce (15 CFR 370.10 (j)); the Office of Foreign Assets Control, Department of Treasury (31 CFR Parts 500+) and the Department of Energy.

NOT GRANTED

No license under 35 U.S.C. 184 has been granted at this time, if the phrase "IF REQUIRED, FOREIGN FILING LICENSE GRANTED" DOES NOT appear on this form. Applicant may still petition for a license under 37 CFR 5.12, if a license is desired before the expiration of 6 months from the filing date of the application. If 6 months has lapsed from the filing date of this application and the licensee has not received any indication of a secrecy order under 35 U.S.C. 181, the licensee may foreign file the application pursuant to 37 CFR 5.15(b).

UNITED STATES PATENT AND TRADEMARK OFFICE

Commissioner for Patents
United States Patent and Trademark Office
P.O. Box 1450
Alexandria, VA 22313-1450
www.uspto.gov

SIEMENS CORPORATION
INTELLECTUAL PROPERTY LAW DEPARTMENT
170 Wood Avenue South
Iselin, NJ 08830

NOV 2 2005

In re Application of:
Charles A. Spellman, Jr.
Serial No.: 10/386,827
Filed: March 13, 2003
Attorney Docket No.: **2002P09363US01;60,428-557**

DECISION ON PETITION TO WITHDRAW HOLDING OF ABANDONMENT

This is a decision on the petition filed April 22, 2005, and resubmitted on May 09, 2005, to withdraw the holding of abandonment. The petition is being treated as a petition under 37 C.F.R. § 1.181, to withdraw the holding of abandonment. No petition fee is required.

The petition is DISMISSED as moot.

An Office action was mailed on September 21, 2004. A response to the Office action was filed on December 21, 2004.

A review of the application file wrapper reveals that the response was not matched with the file wrapper at the time of the examiner contacting the applicant. Subsequently, the response was matched with the file and the application file was not held abandoned. As such, the relief requested in the petition unnecessary. Accordingly, the petition must be dismissed.

Inquiries regarding this decision should be directed to Clayton E. LaBalle, Special Programs Examiner, at (571) 272-1594.

Arthur T. Grimly, Director
Technology Center 2800
Semiconductors, Electrical and Optical
Systems and Components

SPE RESPONSE FOR CERTIFICATE OF CORRECTION

Paper No.: _____

DATE : December 28, 2006

TO SPE OF : ART UNIT 1762

SUBJECT : Request for Certificate of Correction for Appl. No.: 10/386831 patent No.: 7,070,829

Please respond to this request for a certificate of correction within 7 days.

Please review the requested changes/corrections as shown in the **COCIN** document(s) in the IFW application image. No new matter should be introduced, nor should the scope or meaning of the claims be changed.

Please complete the response (see below) and forward the completed response to scanning using document code **COCX**.

Magdalene Talley

Certificates of Correction Branch

703-308-9390 ext. 116

Thank You For Your Assistance

The request for issuing the above-identified correction(s) is hereby:

Note your decision on the appropriate box.

- ☒ **Approved** — All changes apply.
- ☐ **Approved in Part** — Specify below which changes **do not** apply.
- ☐ **Denied** — State the reasons for denial below.

Comments: _____

TIMOTHY MEEKS
SUPERVISORY PATENT EXAMINER

SPE

1762
Art Unit

SPE RESPONSE FOR CERTIFICATE OF CORRECTION

Paper No.:20080623

DATE : July 01, 2008

TO SPE OF : ART UNIT 2612

SUBJECT : Request for Certificate of Correction on Patent No.: 7, 030,771

A response is requested with respect to the accompanying request for a certificate of correction.

Please complete this form and return with file, within **7** days to:
Certificates of Correction Branch - ST (South Tower) 9A22
Palm location **7590** - Tel. No. (703) 305-8309

With respect to the change(s) requested, correcting Office and/or Applicant's errors, should the patent read as shown in the certificate of correction? No new matter should be introduced, nor should the scope or meaning of the claims be changed.

Thank You For Your Assistance **Certificates of Correction Branch**

The request for issuing the above-identified correction(s) is hereby:

Note your decision on the appropriated box.

☒ **Approved** All changes apply.

☐ **Approved in Part** Specify below which changes **do not** apply.

☐ **Denied** State the reasons for denial below.

Comments:

Unable to Annotate or PDF original PTOL-306 shown in eDAN as Miscellaneous Letter Dated 06/07/2006

Original was created by Magdalene Talley 703-308-9390 ext 116

SPE: /George Bugg/ Art Unit 2612

UNITED STATES PATENT AND TRADEMARK OFFICE

COMMISSIONER FOR PATENTS
UNITED STATES PATENT AND TRADEMARK OFFICE
P.O. BOX 1450
ALEXANDRIA, VA 22313-1450
www.uspto.gov

COPY MAILED

JAN 22 2007

OFFICE OF PETITIONS

Kent E. Baldauf, Jr.
700 Koppers Building
436 Seventh Avenue
Pittsburgh PA 15219-1818

In re Patent No. 7,028,729	:	
Issued: April 18, 2006	:	
Application No. 10/386,844	:	DECISION ON PETITION
Filed: March 12, 2003	:	
Attorney Docket No. 4200-021878	:	

This is a decision on the request filed June 30, 2006, which is being treated as a request under 37 CFR 3.81(b) to correct the name of the assignee on the front page of the above-identified patent by way of a certificate of correction.

The petition is GRANTED.

Petitioner requests issuance of a certificate of correction in the name of "APOLLO HARDWOODS COMPANY, LLC."

In accordance with 37 CFR 3.81(b), effective June 25, 2004,:

> *After payment of the issue fee:* Any request for issuance of an application in the name of the assignee submitted after the date of payment of the issue fee, and any request for a patent to be corrected to state the name of the assignee, must state that the assignment was submitted for recordation as set forth in § 3.11 before issuance of the patent, and must include a request for a certificate of correction under § 1.323 of this chapter (accompanied by the fee set forth in § 1.20(a) and the processing fee set forth in § 1.17(i) of this chapter [emphasis added]. *See also* MPEP 1481.01.

The instant petition has been reviewed and found in compliance with current Office provisions concerning certificates of correction to assignee data.

The patent file is being forwarded to the Certificates of Correction Branch for issuance of the requested Certificate of Correction.

Inquiries regarding the issuance of a certificate of correction must be directed to the Certificate of Correction Branch

Telephone inquiries concerning this decision on petition should be directed to the undersigned at (571) 272-3205.

Alesia M. Brown
Petitions Attorney
Office of Petitions

UNITED STATES PATENT AND TRADEMARK OFFICE

COMMISSIONER FOR PATENTS
UNITED STATES PATENT AND TRADEMARK OFFICE
P.O. BOX 1450
ALEXANDRIA, VA 22313-1450
www.uspto.gov

Patent Law Offices of David Millers
6560 Ashfield Court
San Jose, CA 95120

COPY MAILED

MAR 1 4 2005

OFFICE OF PETITIONS

In re Application of	:	
Konstantine N. Karavakis, et al.	:	
Application No. 10/386,875	:	ON PETITION
Filed: March 12, 2003	:	
Attorney Docket No. MTB012US	:	

This is a decision on the petition under 37 CFR 1.137(b), filed February 18, 2005, to revive the above-identified application.

The petition is **GRANTED**.

Telephone inquiries concerning this decision should be directed to the undersigned at (571) 272-3223.

The application file is being referred to Technology Center 2800.

Marianne E. Jenkins
Petitions Examiner
Office of Petitions
Office of the Deputy Commissioner
for Patent Examination Policy

UNITED STATES PATENT AND TRADEMARK OFFICE

COMMISSIONER FOR PATENTS
UNITED STATES PATENT AND TRADEMARK OFFICE
P.O. BOX 1450
ALEXANDRIA, VA 22313-1450
www.uspto.gov

Paper No. 4

NUTTER MCCLENNEN & FISH, LLP
WORLD TRADE CENTER WEST
155 SEAPORT BOULEVARD
BOSTON MA 02210-2604

COPY MAILED

SEP 1 0 2003

OFFICE OF PETITIONS

In re Application of David Thomas Healey Application No. 10/386,887 Filed: March 12, 2003 Attorney Docket No. 072545-0069	DECISION GRANTING PETITION

This is a decision on the petition filed June 25, 2003, requesting that the above-identified application be accorded a filing date of March 12, 2003, with Figures 1-4 as part of the original disclosure.

On March 12, 2003, applicants deposited the above-identified application. However, on June 19, 2003, the Office of Initial Patent Examination mailed a "Notice Of Incomplete Nonprovisional Application," requiring drawings of applicants' invention and stating that the filing date would be the date of receipt of the omitted drawings.

In response, on June 25, 2003, applicants filed, inter alia, the present petition, a copy of Figures 1-4, and paid the $130.00 petition fee. Applicants requested that the application, including Figures 1-4, be accorded a filing date of March 12, 2003. In the present petition, applicants stated that the above-referenced application is a divisional application of application No. 09/698,584, which was incorporated by reference. Applicants further stated: "The drawings were contained in the parent application (U.S. Patent Appl. No. 09/698,584), and thus should be included in the above-referenced divisional patent application based upon the incorporation by reference statement in the Utility Patent Application Transmittal filed on March 12, 2003 (copy attached)." *Petition dated June 25, 2003, p.1.*

Section 201.06(c) of the Manual of Patent Examining Procedure states that:

> . . . an applicant may incorporate by reference the prior application by including, in the application-as-filed, a statement that such specifically enumerated prior application or applications are "hereby incorporated herein by reference." The statement may appear in the specification or in the application transmittal letter. The inclusion of this incorporation by reference of the prior application(s) will permit an applicant to amend the continuing application to include any subject matter in such prior application(s), without the need for a petition. (emphasis supplied)

Obviously, in view of the incorporation by reference of application No. 09/698,584, Figures 1-4 are not new matter if they were part of the disclosure of the nonprovisional application.

Accordingly, the petition is granted.

The application file is being returned to the Office of Initial Patent Examination for further processing with a filing date of March 12, 2003, using Figures 1-4 submitted with the present petition.

Any inquiries related to this decision should be directed to the undersigned at (703) 306-5589.

Christina Tartera Donnell

Christina Tartera Donnell
Senior Petitions Attorney
Office of Petitions

UNITED STATES PATENT AND TRADEMARK OFFICE

COMMISSIONER FOR PATENTS
UNITED STATES PATENT AND TRADEMARK OFFICE
P.O. BOX 1450
ALEXANDRIA, VA 22313-1450
www.uspto.gov

Francis Law Group
1942 Embarcadero
Oakland, CA 94606

COPY MAILED
SEP 28 2006
OFFICE OF PETITIONS

In re Patent No. 6,973,981	:	
Issue Date: December 13, 2005	:	
Application No. 10/386,889	:	DECISION ON PETITION
Filed: March 12, 2003	:	
Patentee(s): Mark J. Stummer	:	

This is a decision on the Request for Certificate of Correction filed February 28, 2006, which is being treated as a request under 37 CFR 3.81(b)[1] to add the name of the assignee on the front page of the above-identified patent by way of a certificate of correction.

The petition is **dismissed**.

Petitioner requests issuance of a Certificate of Correction in the name of "James W. Cooper." However, USPTO assignment records fail to show recordation of the chain of title from the original inventor(s) to the current assignee. Since there is no documentary evidence of the chain of title submitted or recorded prior to issuance of the patent, or in the original application for which this application claims benefit, a Certificate of Correction would not be in order. *See MPEP Section 306.*

In view of the above, the $100 Certificate of Correction fee submitted on February 28, 2006, will be refunded to petitioner's deposit account.

This application file is being referred to Files Repository.

Inquiries concerning this decision should be directed to the undersigned at (571) 272-3226.

Andrea Smith
Petitions Examiner
Office of Petitions

[1] *See* Official Gazette of June 22, 2004

UNITED STATES PATENT AND TRADEMARK OFFICE

COMMISSIONER FOR PATENTS
UNITED STATES PATENT AND TRADEMARK OFFICE
P.O. BOX 1450
ALEXANDRIA, VA 22313-1450
www.uspto.gov

Francis Law Group
1942 Embarcadero
Oakland, CA 94606

COPY MAILED
SEP 28 2006
OFFICE OF PETITIONS

In re Patent No. 6,945,344	:	
Issue Date: September 20, 2005	:	
Application No. 10/386,890	:	DECISION ON PETITION
Filed: March 12, 2003	:	
Patentee(s): Mark J. Stummer	:	

This is a decision on the Request for Certificate of Correction filed September 21, 2006, which is being treated as a request under 37 CFR 3.81(b)[1] to add the name of the assignee on the front page of the above-identified patent by way of a certificate of correction.

The petition is **dismissed**.

Petitioner requests issuance of a Certificate of Correction in the name of "James W. Cooper." However, USPTO assignment records fail to show recordation of the chain of title from the original inventor(s) to the current assignee. Since there is no documentary evidence of the chain of title submitted or recorded prior to issuance of the patent, or in the original application for which this application claims benefit, a Certificate of Correction would not be in order. *See MPEP Section 306.*

In view of the above, the $100 Certificate of Correction fee submitted on September 21, 2006, will be refunded to petitioner's deposit account.

This application file is being referred to Files Repository.

Inquiries concerning this decision should be directed to the undersigned at (571) 272-3226.

Andrea Smith
Petitions Examiner
Office of Petitions

[1] *See* Official Gazette of June 22, 2004

UNITED STATES PATENT AND TRADEMARK OFFICE

UNITED STATES DEPARTMENT OF COMMERCE
United States Patent and Trademark Office
Address: COMMISSIONER FOR PATENTS
P.O. Box 1450
Alexandria, Virginia 22313-1450
www.uspto.gov

Weaver Austin Villeneuve & Sampson LLP
P.O. BOX 70250
OAKLAND, CA 94612-0250

Mail Date: 04/20/2010

Applicant	: Emily C. Mundorff	: DECISION ON REQUEST FOR
Patent Number	: 7620500	: RECALCULATION of PATENT
Issue Date	: 11/17/2009	: TERM ADJUSTMENT IN VIEW
Appliction No	: 10/386,903	: OF WYETH AND NOTICE OF INTENT TO
Filed	: 03/10/2003	: ISSUE CERTIFICATE OF CORRECTION
		:

The Request for Recalculation is **GRANTED** to the extent indicated.

The patent term adjustment has been determined to be **838** days. The USPTO will *sua sponte* issue a certificate of correction reflecting the amount of PTA days determined by the recalculation.

Prior to the issuance of the certificate of correction, the USPTO will afford patentee an opportunity to be heard and request reconsideration. Accordingly, patentee has **one month or thirty (30) days**, whichever is longer, to file a request for reconsideration of this patent term adjustment calculation. See 35 U.S.C. 154(b)(3)(B)(ii) and 37 CFR 1.322(a)(4). No extensions of time will be granted under 37 CFR 1.136.

Patentee should use document code PET.OP if electronically filing a request for reconsideration of this patent term adjustment calculation. The patentee must also include the information required by 37 CFR 1.705(b)(2) and the fee required by 37 CFR 1.18(e). If patentee does not file a timely request for reconsideration of this patent term adjustment calculation including the information required by 37 CFR 1.705(b)(2) and the fee required by 37 CFR 1.18(e), the USPTO will issue a certificate of correction reflecting the PTA determination noted above.

Patentee should be aware that in order to preserve the right to review in the United States District Court for the District of Columbia of the USPTO patent term adjustment determination, patentee must ensure that he or she also take the steps required under 35 U.S.C. 154(b)(4)(A) in a timely manner. Nothing in the request for recalculation should be construed as providing an alternative time frame for commencing a civil action under 35 U.S.C. 154(b)(4)(A).

Any questions concerning this decision should be directed to the Office of Patent Legal Administration at 571-272-7702.

UNITED STATES PATENT AND TRADEMARK OFFICE

Commissioner for Patents
United States Patent and Trademark Office
P.O. Box 1450
Alexandria, VA 22313-1450
www.uspto.gov

Kris Kalidindi Esq.
Potomac Patent Group, PLLC
2010 Corporate Ridge, Suite 700
McLean, VA 22102

COPY MAILED

JUL 17 2006

OFFICE OF PETITIONS

In re Application of

MES, Ian
Application No. 10/386,910
Filed: March 11, 2003
Attorney Docket No. 0331-038

DECISION ON PETITION
TO WITHDRAW
FROM RECORD

This is a decision on the Request to Withdraw as attorney or agent of record under 37 C.F.R. § 1.36(b), filed August 16, 2005.

The request is **NOT APPROVED** as moot.

A review of the file record indicates that the power of attorney to Kris Kalidindi has been revoked by the assignee of the patent application on March 7, 2006. Accordingly, the request to withdraw under 37 C.F.R. § 1.36(b) is moot.

All future communications from the Office will continue to be directed to the below-listed address until otherwise notified by applicant.

Telephone inquires concerning this decision should be directed to David Bucci at 571-272- 7099.

David Bucci
Petitions Examiner
Office of Petitions

cc: Merek, Blackmon & Voorhees, LLC
673 S Washington Street
Alexandria, VA 22314

UNITED STATES PATENT AND TRADEMARK OFFICE

COMMISSIONER FOR PATENTS
UNITED STATES PATENT AND TRADEMARK OFFICE
P.O. BOX 1450
ALEXANDRIA, VA 22313-1450
www.uspto.gov

JJGJr: 07-03

Paper No: 4

GIBBONS, DEL DEO, DOLAN,
GRIFFINGER & VECCHIONE
1 RIVERFRONT PLAZA
NEWARK NJ 07102-5497

COPY MAILED

AUG 0 8 2003

OFFICE OF PETITIONS

In re Application of
Greig, et al.
Application No. 10/386,915
Filed: 12 March, 2003
Attorney Docket No.: 009621-46490

DECISION ON PETITION

This is a decision on the petition filed on 27 June, 2003, styled "Petition Under 37 C.F.R. §1.53(e)[1] To Be Accorded a Filing Date"--notably, however, Petitioner alleges that the drawings found to be missing from the application "are not necessary for the understanding of the subject matter to be patented."

For the reasons set forth below, the petition is **GRANTED in part**.[2]

The application was filed on 12 March, 2003.

---

[1] The regulations at 37 C.F.R. §1.53 provide in pertinent part:

§ 1.53 Application number, filing date, and completion of application.

* * *

(e) *Failure to meet filing date requirements.*

(1) If an application deposited under paragraph (b), (c), or (d) of this section does not meet the requirements of such paragraph to be entitled to a filing date, applicant will be so notified, if a correspondence address has been provided, and given a time period within which to correct the filing error.

(2) Any request for review of a notification pursuant to paragraph (e)(1) of this section, or a notification that the original application papers lack a portion of the specification or drawing(s), must be by way of a petition pursuant to this paragraph accompanied by the fee set forth in § 1.17(h). In the absence of a timely (§ 1.181(f)) petition pursuant to this paragraph, the filing date of an application in which the applicant was notified of a filing error pursuant to paragraph (e)(1) of this section will be the date the filing error is corrected.

(3) If an applicant is notified of a filing error pursuant to paragraph (e)(1) of this section, but fails to correct the filing error within the given time period or otherwise timely (§ 1.181(f)) take action pursuant to this paragraph, proceedings in the application will be considered terminated. Where proceedings in an application are terminated pursuant to this paragraph, the application may be disposed of, and any filing fees, less the handling fee set forth in § 1.21(n), will be refunded.

* * *

[2] No petition fee has been charged, however, as authorized by Petitioner, the basic filing fee ($750.00), extra claim(s) fees ($84.00), and surcharge ($130.00) for late filing of oath/declaration and payment of filing fee are charged to Deposit Account 03-3839.

On 30 May, 2003, the Office mailed a "Notice of Incomplete Nonprovisional Application" indicating that the application was filed without, *inter alia*, drawings as required under 35 U.S.C. §113 (first sentence).

Petitioner responds with the instant petition stating that:

- the drawings (Fig. 1, Fig. 2 and Fig. 3) found to be missing from the application "are not necessary for the understanding of the subject matter to be patented"; and
- with regard to the absent Figs. 1 - 3, Petitioner states that the "drawings merely tabulize the results described in this Application. As seen from our Response to the Notice, Applicants have deleted all references to the drawings in the specification. These drawings are not necessary for the understanding of the invention."

Thus, Petitioner contends, drawings are not necessary for the understanding of the subject matter to be patented.

It is the practice of the Office to treat an application that contains at least one process or method claim as an application for which a drawing is not necessary for the understanding of the invention under 35 U.S.C. §113 (first sentence). (See: MPEP §601.01[3])

This application contains method claims, e.g., claims 1 - 6. Therefore, the application should have been treated as an application filed without all of the drawing figures referred to in the

---

[3] The commentary at MPEP §601.01 provides in pertinent part:

* * *

601.01(f) Applications Filed Without Drawings

35 U.S.C. 111(a)(2)(B) and 35 U.S.C. 111(b)(1)(B) each provide, in part, that an "application shall include . . . a drawing as prescribed by section 113 of this title" and 35 U.S.C. 111(a)(4) and 35 U.S.C. 111(b)(4) each provide, in part, that the "filing date . . . shall be the date on which . . . any required drawing are received in the Patent and Trademark Office." 35 U.S.C. 113 (first sentence) in turn provides that an "applicant shall furnish a drawing where necessary for the understanding of the subject matter sought to be patented.

Applications filed without drawings are initially inspected to determine whether a drawing is referred to in the specification, and if not, whether a drawing is necessary for the understanding of the invention. 35 U.S.C. 113 (first sentence).

It has been USPTO practice to treat an application that contains at least one process or method claim as an application for which a drawing is not necessary for an understanding of the invention under 35 U.S.C. 113 (first sentence). The same practice has been followed in composition applications.

* * *

A nonprovisional application having at least one claim, or a provisional application having at least some disclosure, directed to the subject matter discussed above for which a drawing is usually not considered essential for a filing date, not describing drawing figures in the specification, and filed without drawings will simply be processed for examination, so long as the application contains something that can be construed as a written description. A nonprovisional application having at least one claim, or a provisional application having at least some disclosure, directed to the subject matter discussed above for which a drawing is usually not considered essential for a filing date, describing drawing figure(s) in the specification, but filed without drawings will be treated as an application filed without all of the drawing figures referred to in the specification as discussed in MPEP § 601.01(g), so long as the application contains something that can be construed as a written description. In a situation in which the appropriate Technology Center (TC) determines that drawings are necessary under 35 U.S.C. 113 (first sentence) the filing date issue will be reconsidered by the USPTO.

* * *

specification as discussed in MPEP §601.01(g).[4]

It appears that a "Notice of Omitted Items" should have been mailed instead of the "Notice of Incomplete Nonprovisional Application."

Therefore, the 30 May, 2003, "Notice of Incomplete Nonprovisional Application" hereby is **vacated**.

The application is accorded a filing date of 12 March, 2003.

The petition is granted in part, to the extent that the application will be accorded the filing date of 12 March, 2003, without the drawings containing Figures 1 - 3 as part of the original disclosure of the application.

The application file is being returned to the Office of Initial Patent Examination for further processing with a corrected filing date of 12 March, 2003, indicating in the Office records that "0" sheets of drawings were present on filing, and the mailing of a corrected filing receipt.

Telephone inquiries concerning this decision may be directed to the undersigned at (703)305-9199.

John J. Gillon, Jr.
Senior Attorney
Office of Petitions

---

[4] The commentary at MPEP §601.01 provides in pertinent part:

* * *

601.01(g) Applications Filed Without All Figures of Drawings

The Office of Initial Patent Examination (OIPE) reviews application papers to determine whether all of the figures of the drawings that are mentioned in the specification are present in the application. If the application is filed without all of the drawing figure(s) referred to in the specification, and the application contains something that can be construed as a written description, at least one drawing, if necessary under 35 U.S.C. 113 (first sentence), and, in a nonprovisional application, at least one claim, OIPE will mail a "Notice of Omitted Item(s)" indicating that the application papers so deposited have been accorded a filing date, but are lacking some of the figures of drawings described in the specification. The mailing of a "Notice of Omitted Item(s)" will permit the applicant to either: (1) promptly establish prior receipt in the USPTO of the drawing(s) at issue (generally by way of a date-stamped postcard receipt (MPEP § 503)); or (2) promptly submit the omitted drawing(s) in a nonprovisional application and accept the date of such submission as the application filing date. An applicant asserting that the drawing(s) was in fact deposited in the USPTO with the application papers must, within 2 months from the date of the "Notice of Omitted Item(s)," file a petition under 37 C.F.R. 1.53(e) with the petition fee set forth in 37 C.F.R. 1.17(h), along with evidence of such deposit (37 C.F.R. 1.181(f)). The petition fee will be refunded if it is determined that the drawing(s) was in fact received by the USPTO with the application papers deposited on filing.

* * *

UNITED STATES PATENT AND TRADEMARK OFFICE

COMMISSIONER FOR PATENTS
UNITED STATES PATENT AND TRADEMARK OFFICE
P.O. BOX 1450
ALEXANDRIA, VA 22313-1450
www.uspto.gov

YOUNG LAW FIRM, P.C.
ALAN W. YOUNG
4370 ALPINE ROAD
SUITE 106
PORTOLA VALLEY CA 94028

COPY MAILED

MAY 2 5 2006

OFFICE OF PETITIONS

In re Application of	:	
Derek J. Harper, et al.	:	
Application No. 10/386,919	:	DECISION ON PETITION
Filed: March 11, 2003	:	TO WITHDRAW
Attorney Docket No. MICR5701-CIP	:	FROM RECORD
	:	

This is a decision on the Request to Withdraw as attorney or agent of record under 37 CFR §1.36(b), filed January 12, 2006.

The request is **NOT APPROVED**.

A grantable request to withdraw as attorney/agent of record must be signed by every attorney/agent seeking to withdraw or contain a clear indication that one attorney is signing on behalf of another/others. A request to withdraw will not be approved unless at least 30 (thirty) days would remain between the date of approval and the later of the expiration date of a time to file a response or the expiration date of the maximum time period which can be extended under 37 CFR § 1.136(a).

The request cannot be approved because there remains less than 30 (thirty days) between the date of this decision and the maximum extendable time period for filing a response to the Office action mailed on December 13, 2005.

All future communications from the Office will continue to be directed to the above-listed address until otherwise notified by applicant.

Telephone inquiries concerning this decision should be directed to Sherry D. Brinkley at 571-272- 3204.

Sherry D. Brinkley
Petitions Examiner
Office of Petitions

Conferee:

UNITED STATES PATENT AND TRADEMARK OFFICE

COMMISSIONER FOR PATENTS
UNITED STATES PATENT AND TRADEMARK OFFICE
P.O. BOX 1450
ALEXANDRIA, VA 22313-1450
www.uspto.gov

ALAN W. YOUNG
YOUNG LAW FIRM, P.C.
4370 ALPINE ROAD
SUITE 106
PORTOLA VALLEY, CA 94028

COPY MAILED
SEP 1 8 2006
OFFICE OF PETITIONS

In re Application of	:	
Derek J. Harper, et al.	:	
Application No. 10/386,919	:	DECISION ON PETITION
Filed: March 11, 2003	:	TO WITHDRAW
Attorney Docket No. MICR5701-CIP	:	FROM RECORD
	:	

This is a decision on the renewed Request to Withdraw as attorney or agent of record under 37 CFR § 1.36(b), filed June 15, 2006.

The request is **APPROVED**.

The request was signed by Alan W. Young on behalf of all attorneys/agents of record who are associated with Customer No. 22430.

All attorneys/agents associated with the Customer Number 22430 have been withdrawn. Applicant is reminded that there is no attorney of record at this time.

The correspondence address of record has been changed and the new correspondence address is the address indicated below.

The application became abandoned for failure to respond to the non-final Office action mailed December 13, 2005.

Telephone inquiries concerning this decision should be directed to the undersigned at (571) 272-3204.

Sherry D. Brinkley
Petitions Examiner
Office of Petitions

cc: DEREK J. HARPER
5856 BUTTONWOOD LANE
GOLETA, CA 93117

UNITED STATES PATENT AND TRADEMARK OFFICE

UNITED STATES DEPARTMENT OF COMMERCE
United States Patent and Trademark Office
Address: COMMISSIONER FOR PATENTS
P.O. Box 1450
Alexandria, Virginia 22313-1450
www.uspto.gov

APPLICATION NUMBER	FILING OR 371 (c) DATE	FIRST NAMED APPLICANT	ATTY. DOCKET NO./TITLE
10/386,919	03/11/2003	Derek J. Harper	MICR5701-CIP

CONFIRMATION NO. 8301

OC000000020464777

OC000000020464777

22430
YOUNG LAW FIRM, P.C.
ALAN W. YOUNG
4370 ALPINE ROAD
SUITE 106
PORTOLA VALLEY, CA 94028

Date Mailed: 09/18/2006

NOTICE REGARDING CHANGE OF POWER OF ATTORNEY

This is in response to the Power of Attorney filed 06/15/2006.

- The withdrawal as attorney in this application has been accepted. Future correspondence will be mailed to the new address of record. 37 CFR 1.33.

Sherry D. Brinkley

SHERRY D BRINKLEY
OP (571) 272-3204

FORMER ATTORNEY/AGENT COPY

UNITED STATES PATENT AND TRADEMARK OFFICE

COMMISSIONER FOR PATENTS
UNITED STATES PATENT AND TRADEMARK OFFICE
P.O. BOX 1450
ALEXANDRIA, VA 22313-1450
WWW.USPTO.GOV
AMB

Paper No. 6

FROMMER LAWRENCE & HAUG
745 FIFTH AVENUE- 10TH FL.
NEW YORK, NY 10151

COPY MAILED

AUG 06 2003

OFFICE OF PETITIONS

In re Application of :
Bergmann, et al. :
Application No. 10/386,921 : ON PETITION
Filed: March 12, 2003 :
Atty. Dkt. No.: 830006-2001.1 :

This is a decision on the "PETITION PURSUANT TO 37 C.F.R. §§ 1.53(E) AND 1.181 IN RESPONSE TO NOTICE OF INCOMPLETE NONPROVISIONAL APPLICATION" filed July 21, 2003. This petition is being treated under 37 CFR 1.182 as a petition to accord the above-identified application a filing date of March 12, 2003 and accept entry of inadvertently omitted drawings via preliminary amendment.

The petition is **DISMISSED**.

The application was submitted March 12, 2003 as a continuation application of U.S. Application No. 09/242,450. On May 21, 2003, the Office of Initial Patent Examination mailed a Notice of Incomplete Nonprovisional Application ("Notice") stating, *inter alia*, that the application had not been accorded a filing date because the application was filed without drawings in accordance with 35 U.S.C. 113 (first sentence).

The Notice indicated the filing date would be the date of receipt of the drawing and further indicated that any assertion that the drawings were submitted or were not necessary for a filing date must be by way of petition.

Petitioner has submitted the omitted drawings upon petition and indicates that the drawings were inadvertently omitted from the application filing. Petitioner further argues that the omitted drawings were incorporated by reference into the instant application.

An incorporation by reference statement may be relied upon to permit the entering of a portion of the prior application into the continuation or divisional application when the portion of the prior application has been inadvertently omitted from the submitted application papers in the continuation or divisional application. The inclusion of this incorporation by reference of the prior application(s) will permit an applicant to amend the continuation or divisional application to include any subject matter in such prior application(s), without the need for a petition provided the continuation or divisional application is entitled to a filing date notwithstanding the incorporation by reference. *See*, MPEP 201.06(c).

Accordingly, in view of the incorporation by reference of the prior application, the drawings are not new matter if these pages were part of the disclosure of the prior application.

The petition fee will not be refunded since the petition under 37 CFR 1.182 was necessary to correct petitioner's filing error.

In the normal course, petitioner would be instructed to file a preliminary amendment requesting entry of the omitted drawings, however, the instant petition is accompanied by a preliminary amendment seeking entry of the omitted drawings. Accordingly, this application is being returned to the Office of Initial Patent Examination for further processing with a filing date of March 12, 2003. Thereafter, the application will be forwarded to the appropriate Group Art Unit for consideration by the examiner of the preliminary amendment submitted herewith requesting entry of drawings.

Telephone inquiries related to this decision may be directed to the undersigned at (703) 305-0310.

Alesia M. Brown
Senior Petitions Attorney
Office of Petitions

SPE RESPONSE FOR CERTIFICATE OF CORRECTION

Paper No.: _____

DATE : August 9, 2005

TO SPE OF : ART UNIT 2855

SUBJECT : Request for Certificate of Correction on Patent No.: 6,880,410

A response is requested with respect to the accompanying request for a certificate of correction.

Please complete this form and return with file, within **7** days to:
Palm location **7580, Certificates of Correction Branch – South Tower – 9A22**
If response is for an IFW, **return to employee (named below) via PUBSCofC Team in MADRAS.**
With respect to the change(s) requested, correcting Office and/or Applicant's errors, should the patent read as shown in the certificate of correction (COCIN)? No new matter should be introduced, nor should the scope or meaning of the claims be changed.

Magdalene Talley

Thank You For Your Assistance

Certificates of Correction Branch
Tel. No. 703-308-9309 ext. 116

The request for issuing the above-identified correction(s) is hereby:
Note your decision on the appropriate box.

- ☐ **Approved** — **All** changes apply.
- ☐ **Approved in Part** — Specify below which changes **do not** apply.
- ☒ **Denied** — State the reasons for denial below.

Comments:

The certificate of correction will not be entered due to a typographical error that still exists. Claim 8 recites a "tabulator" instead of a "tarbulator" as is consistent with the other claims. Attorney D'Ambrosio was informed of this error by Examiner Mack on 10/31/05. Atty D'Ambrosio will file a new C of C correcting the error.

SPE

2855
Art Unit

OIPE JC25
JUL 20 2005
PATENT & TRADEMARK OFFICE

10/386930

COFC/14

PATENT

IN THE UNITED STATES PATENT AND TRADEMARK OFFICE

In re Application of

Wolfgang DRAHM et al.

U.S. Patent No. 6,880,410

Issued: April 19, 2005

Art Unit: 2855

Atty. Dkt.: DRAH3004/FJD

Confirmation No.: 5297

For : Transducer and method for measuring a fluid flowing in a pipe

Certificate
JUL 25 2005
of Correction

REQUEST FOR CERTIFICATE OF CORRECTION

Commissioner for Patents
P.O. Box 1450
Alexandria, VA 22313-1450

Sir:

The undersigned respectfully requests correction of the above-identified U.S. patent by correcting a duplicate claim as noted on the attached form PTO-1050. In column 12, line 22, claim 8 is a duplicate of claim 7. It is a typographical oversight.

Claim 8 should be changed to read as:

8. A transducer as set forth in claim 5 wherein the tubulator is helical, particularly helicoidal.

The required fee under 37 CFR § 1.20(a) of $100 is submitted herewith and authorization is granted to charge any additional fees associated with this communication, or credit any overpayment, to Deposit Account 02-0200.

It is respectfully requested that the attached form be duly certified and returned to the undersigned attorney.

Respectfully submitted,

Date: July 20, 2005

07/21/2005 SSITHIB1 00000050 6880410
01 FC:1811 100.00 OP

Felix J. D'Ambrosio
Reg. No. 25,721

Customer Number *23364*
BACON & THOMAS, PLLC
625 Slaters Lane, Fourth Floor
Alexandria, Virginia 22314
Telephone: (703) 683-0500
Facsimile: (703) 683-1080

JUL 26 2005

S:\Producer\fjd\CLIENTS\Endress+Hauser Holding GmbH\DRAH3004\Request for COC.wpd

UNITED STATES PATENT AND TRADEMARK OFFICE

CERTIFICATE OF CORRECTION

PATENT NO. : 6,880,410

DATED : April 19, 2005

INVENTOR(S) : Wolfgang Drahm

It is certified that an error appears in the above-identified patent and that said Letters Patent is hereby corrected as shown below:

IN THE CLAIMS:

In column 12, lines 22 and 23 of claim 8 are incorrect.

Claim 8 should be changed to read as:

8. A transducer as set forth in claim 5 wherein the tubulator is helical, particularly helicoidal.

Mailing address of sender:

Felix J. D'Ambrosio
Bacon & Thomas, PLLC
625 Slaters Lane 4th Floor
Alexandria, Va. 22314
TEL (703) 683-0500
FAX (703) 683-1080

Patent No. 6,880,410

No. of add'l copies
@ .30 per page

JUL 2 6 2005

UNITED STATES PATENT AND TRADEMARK OFFICE

Commissioner for Patents
United States Patent and Trademark Office
P.O. Box 1450
Alexandria, VA 22313-1450
www.uspto.go

MILES & STOCKBRIDGE PC
1751 PINNACLE DRIVE
SUITE 500
MCLEAN, VA 22102-3833

COPY MAILED

DEC 2 3 2004

OFFICE OF PETITIONS

In re Application of	:	
Floied et al.	:	
Application No. 10/386,934	:	ON PETITION
Filed: March 13, 2003	:	
Attorney Docket No. T3546-908280	:	

This is a decision on the petition under 37 C.F.R. § 1.137(b), filed November 22, 2004, to revive the above-identified application.

The petition is **GRANTED.**

The above-identified application became abandoned for failure to submit the issue fee and publication fee in a timely manner in reply to the Notice of Allowance mailed March 16, 2004, which set a statutory period for reply of three (3) months. Accordingly, the above-identified application became abandoned on June 17, 2004. A Notice of Abandonment was mailed on July 26, 2004.

Petitioner has met the requirements to revive the above-identified application pursuant to 37 CFR 1.137(b).

This matter is being referred to the Publishing Division for processing into a patent.

Telephone inquiries regarding this decision should be directed to the undersigned at (571) 272-3282.

Liana Chase
Petitions Examiner
Office of Petitions
Office of the Deputy Commissioner
for Patent Examination Policy

UNITED STATES PATENT AND TRADEMARK OFFICE

Commissioner for Patents
United States Patent and Trademark Office
P.O. Box 1450
Alexandria, VA 22313-1450
www.uspto.gov

SUGHRUE-265550
2100 PENNSYLVANIA AVE. NW
WASHINGTON, DC 20037-3213

MAILED

JUN 23 2009

OFFICE OF PETITIONS

In re Patent No. 7,452,277 :
Issue Date: November 18, 2008 :
Application No. 10/386,945 : ON PETITION
Filed: March 13, 2003 :
Attorney Docket No. Q74643 :

This is a decision on the petition filed March 27, 2009, which is being treated as a request under 37 CFR 3.81(b)[1] to correct the name of the assignee on the front page of the above-identified patent by way of a Certificate of Correction.

The request is **GRANTED**.

Telephone inquiries concerning this decision may be directed to the undersigned at (571) 272-3204. Inquiries regarding the issuance of a certificate of correction should be directed to the Certificate of Correction Branch at (571) 272-4200.

The Certificates of Correction Branch will be notified of this decision granting the petition under 37 CFR 3.81(b) and directing issuance of the requested Certificate of Correction.

Sherry D. Brinkley
Petitions Examiner
Office of Petitions

[1] *See* MPEP 1309, subsection II; and Official Gazette of June 22, 2004.

RAM Fee History Query

Revenue Accounting and Management

Name/Number: 10386945 Total Records Found: 15

Start Date: Any Date End Date: Any Date

Accounting Date	Sequence Num.	Fee Type	Fee Code	Fee Amount	Mailroom Date	Payment Method
06/24/2009	00000009	4	1464	-$130.00	01/27/2009	DA 194880
06/24/2009	00000010	4	1811	-$100.00	01/27/2009	DA 194880
01/27/2009	00009396	4	1811	$100.00	01/27/2009	DA 194880
01/27/2009	00009395	4	1464	$130.00	01/27/2009	DA 194880
11/08/2007	00000010	1	1504	$300.00	11/07/2007	CK
11/08/2007	00000009	1	1501	$1,440.00	11/07/2007	CK
06/29/2007	00011743	4	1252	$450.00	06/29/2007	DA 194880
06/29/2007	00011744	4	1401	$500.00	06/29/2007	DA 194880
05/10/2006	00000178	1	1251	$120.00	05/08/2006	CK
09/02/2003	00000041	1	8021	$40.00	08/28/2003	CK
08/29/2003	00000072	1	1252	$410.00	08/28/2003	CK
08/29/2003	00000071	1	1051	$130.00	08/28/2003	CK
08/29/2003	00000070	1	1201	$1,512.00	08/28/2003	CK
08/29/2003	00000069	1	1202	$90.00	08/28/2003	CK
08/29/2003	00000068	1	1001	$750.00	08/28/2003	CK

```
Adjustment date: 06/24/2009  LDIEP1
01/27/2009 INTEFSW  00005711 194880   10386945
01 FC:1464          130.00 CR
02 FC:1811          100.00 CR
```

UNITED STATES PATENT AND TRADEMARK OFFICE

Commissioner for Patents
United States Patent and Trademark Office
P.O. Box 1450
Alexandria, VA 22313-1450
www.uspto.gov

MEDTRONIC, INC.
710 MEDTRONIC PARKWAY NE
MINNEAPOLIS MN 55432-9924

COPY MAILED

MAR 18 2008

OFFICE OF PETITIONS

In re Application of
Kenneth B. Stokes et al.
Application No. 10/386,967
Filed: March 11, 2003
Attorney Docket No. P0008413.00

ON PETITION

This is a decision on the petition, filed January 22, 2008 under 37 CFR 1.137(b), to revive the above-identified application.

The petition is **GRANTED**.

An non-Final Office Action was mailed December 22, 2006. A response in the form of an amendment was filed March 22, 2007. However, on March 27, 2007 a Notice of Non-Compliant Amendment was mailed. A second response filed April 26, 2007 was also non-compliant under 37 CFR 1.121, and in an office communication, "Failure to Acceptably Respond to Notice of Non-Compliant Amendment" mailed December 27, 2007, petitioner was advised. No new time period for reply was provided with the December 27, 2007 "Notice" and thus the application became abandoned.

The instant petition and this decision precede the mailing of the Notice of Abandonment.

A grantable petition to revive an abandoned application under 37 CFR 1.137(b) must be accompanied by:

(1) the required reply (unless previously filed), which may be met by the filing of a continuing application in a nonprovisional application abandoned for failure to prosecute, but must be the payment of the issue fee or any outstanding balance thereof in an application or patent, abandoned or lapsed for failure to pay the issue fee or any portion thereof;

(2) the petition fee required by 37 CFR 1.17(l);

(3) a statement that the entire delay in filing the required reply from the due date for the reply until the filing of a grantable petition pursuant to 37 CFR 1.137(b) was

unintentional. The Commissioner may require additional information where there is a question whether the delay was unintentional; and

(4) a terminal disclaimer (and fee as set forth in 37 CFR 1.20(d)) in a design application, a utility application filed before June 8, 1995, or a plant application filed before June 8, 1995.

A supplemental amendment is submitted with the petition to revive.

This matter is being referred to Technology Center 1615 for processing of the amendment filed January 22, 2008.

Telephone inquiries concerning this matter may be directed to the undersigned Petitions Attorney at (571) 272-3212.

Patricia Faison-Ball

Patricia Faison-Ball
Senior Petitions Attorney
Office of Petitions

UNITED STATES PATENT AND TRADEMARK OFFICE

Commissioner for Patents
United States Patent and Trademark Office
P.O. Box 1450
Alexandria, VA 22313-1450
www.uspto.gov

THE SCRIPPS RESEARCH INSTITUTE
OFFICE OF PATENT COUNSEL, TPC-8
10550 NORTH TORREY PINES ROAD
LA JOLLA CA 92037

COPY MAILED

JUL 18 2008

In re Application of :
Kyriacos Costa Nicolaou et al. :
Application No. 10/386,999 : ON PETITION
Filed: March 11, 2003 :
Attorney Docket No.: TSRI573.4D1

This is a decision on the petition filed June 16, 2008 to withdraw the holding of abandonment, under 37 CFR 1.181.

The petition under 37 CFR 1.181 is **GRANTED**.

This application became abandoned for failure to timely pay the issue fee in response to the Notice of Allowance mailed May 17, 2007. Accordingly, a Notice of Abandonment was mailed January 4, 2008.

Petitioner argues that the Notice of Allowance was not received although the Examiner's Interview Summary mailed on the same date was received. In support, petitioner indicates that a search of the file and the docket records revealed that the Notice was not received and submits a copy of the page from their docket, wherein receipt of the Notice would have been entered, had it been received to substantiate the claim. The statement and attachments corroborate non-receipt of the Notice of Allowance.

In view of the facts set forth in the petition, it is concluded that the Notice of Allowance was never received. Accordingly, the holding of abandonment is withdrawn. No petition fee is due and none has been charged.

This matter is being referred to Technology Center 1625 for a re-mailing of the Notice of Allowance.

Telephone inquiries concerning this matter should be directed to the undersigned Petitions Attorney at (571) 272-3212.

Patricia Faison-Ball

Patricia Faison-Ball
Senior Petitions Attorney
Office of Petitions

UNITED STATES PATENT AND TRADEMARK OFFICE

COMMISSIONER FOR PATENTS
UNITED STATES PATENT AND TRADEMARK OFFICE
P.O. BOX 1450
ALEXANDRIA, VA 22313-1450
www.uspto.gov

MADSON & AUSTIN
GATEWAY TOWER WEST
SUITE 900
15 WEST SOUTH TEMPLE
SALT LAKE CITY, UT 84101

COPY MAILED
FEB 14 2006
OFFICE OF PETITIONS

In re Application of :
Fu-Shing Wang, et al. :
Application No. 10/387,025 : ON PETITION
Filed: March 12, 2003 :
Attorney Docket No. 3304.2.1.2 :

This is a decision on the petition under 37 CFR §1.78(a)(3), filed December 5, 2005, to accept an unintentionally delayed claim under 35 U.S.C.§ 120 for the benefit of the prior-filed nonprovisional application set forth in the concurrently filed amendment.

The petition is **DISMISSED AS MOOT**.

A petition under 37 CFR §1.78(a)(3) is only applicable to those applications filed on or after November 29, 2000.

Along with the instant petition under 37 CFR §1.78(a)(3), petitioner has submitted an amendment to the first sentence of the specification following the title to include a reference to the prior filed application.

This nonprovisional application was filed on March 12, 2003, and was pending at the time of filing of the instant petition. While a reference to the prior-filed nonprovisional application was not included in an ADS or in the first sentence of the specification following the title, reference nevertheless was made in the transmittal letter filed with the above-identified application.

The current procedure where a claim for priority under 37 CFR §1.78(a)(3) is not included in the first sentence of the specification or in an ADS but does appear either in the oath or declaration or a transmittal letter filed with the application and the Office notes the claim for priority, no petition will be required to accept a late claim for priority. This is because the application would have been scheduled for publication on the basis of the information concerning the claim submitted elsewhere in the application within the time period set forth in 37 CFR §§1.78(a)(2(ii). However, on the other hand, if the USPTO does not note the claim for priority to the nonprovisional application in the oath or declaration or transmittal letter submitted with the

application, a petition will be required to accept a late claim for priority under 37 CFR 1.78(a)(3).[1] In this case, the Office noted the claim for priority of nonprovisional Application No. 09/946,063 in the transmittal letter filed with the application, as shown by its inclusion on the filing receipt.

In view of the above, the $1370 petition fee submitted is unnecessary and will be refunded to petitioner's deposit account in due course.

Any questions concerning this decision on petition may be directed to Sherry Brinkley at (571) 272-3204. All other inquiries concerning either the examination procedures or status of the application should be directed to the Technology Center.

The examiner of Technology Center AU 1712 will take appropriate action on the amendment filed December 5, 2005, including consideration of the claim for benefit under 35 U.S.C. § 120 and 37 CFR 1.78(a)(2) of the prior-filed application.

Sherry D. Brinkley
Petitions Examiner
Office of Petitions
Office of the Deputy Commissioner
for Patent Examination Policy

Frances M. Hicks
Lead Petitions Examiner
Office of Petitions
Office of the Deputy Commissioner
for Patent Examination Policy

[1] Note MPEP 201.11 (V), page 200-75 (Rev. 1. Feb. 2004 and 66 Federal Register 67087 at 67089 (Dec. 28, 2001), effective December 28, 2001.

UNITED STATES PATENT AND TRADEMARK OFFICE

Commissioner for Patents
United States Patent and Trademark Office
P.O. Box 1450
Alexandria, VA 22313-1450
www.uspto.gov

GAUTHIER & CONNORS, LLP
225 FRANKLIN STREET
SUITE 2300
BOSTON MA 02110

COPY MAILED

DEC 17 2009

OFFICE OF PETITIONS

In re Patent No. 6,975,459	:	
Issue Date: December 13, 2005	:	
Application No. 10/387,026	:	LETTER
Filed: March 12, 2003	:	
Attorney Docket No. MIT9386	:	

This is in response to the notice filed by facsimile on July 24, 2009, for acceptance of a fee deficiency submission under 37 CFR 1.28.

Your fee deficiency submission under 37 CFR 1.28 is hereby **NOT ACCEPTED**.

It appears that the petition was not properly signed by a person having authority to prosecute in the above-identified patent. Therefore, the request can not be accepted at this time.

Petitioner's attention is directed to 37 CFR 1.33(b), which states.

> (b) Amendments and other papers. Amendments and other papers, except for written assertions pursuant to § 1.27(c)(2)(ii) of this part, filed in the application must be signed by:
>
> (1) A registered patent attorney or patent agent of record appointed in compliance with § 1.32(b);
> (2) A registered patent attorney or patent agent not of record who acts in a representative capacity under the provisions of § 1.34;
> (3) An assignee as provided for under §3.71(b) of this chapter; or
> (4) All of the applicants (§ 1.41(b)) for patent, unless there is an assignee of the entire interest and such assignee has taken action in the application in accordance with § 3.71 of this chapter.

The file does not indicate a change of address has been submitted, although the address given on the petition differs from the address of record. If appropriate, a change of address should be filed in accordance with MPEP 601.03. A courtesy copy of this decision is being mailed to the address given on the petition; however, the Office will mail all future correspondence solely to the address of record.

Accordingly, the request cannot be accepted until it is signed by all inventors, an attorney/agent who is registered to practice before the U.S. Patent and Trademark Office, or the assignee of the entire interest. If the request is signed by an assignee, the assignee must comply with the requirements of 37 CFR 3.73(b).

Inquiries concerning this communication should be directed to the undersigned at (571) 272-3213.

Cheryl Gibson-Baylor
Petitions Examiner
Office of Petitions

cc: Daniel O' Brien
Massachusetts Institute of Technology
Technology Licensing Office
Five Cambridge Center, Kendall Square
Cambridge, Massachusetts 02142-1493

UNITED STATES PATENT AND TRADEMARK OFFICE

COMMISSIONER FOR PATENTS
UNITED STATES PATENT AND TRADEMARK OFFICE
P.O. BOX 1450
ALEXANDRIA, VA 22313-1450
www.uspto.gov

COPY MAILED

AUG 28 2007

OFFICE OF PETITIONS

SETH M. NEHRBASS
PATENT ATTORNEY
SUITE 3290
3838 NORTH CAUSEWAY BOULEVARD
METAIRIE, LA 70002

In re Application of
Leroy D. Dauterive, et al.
Application No. 10/387,028
Filed: March 12, 2003
Attorney Docket No. 18454

ON PETITION

This is a decision in response to the petition, filed April 4, 2007, to revive the above-identified application under the provisions of 37 CFR 1.137(b).

The petition is **GRANTED**.

The application became abandoned for a failure to reply in a timely manner to a Notice of Insufficient Filing Fee mailed May 11, 2004. A Notice of Abandonment was mailed on February 23, 2005. On April 4, 2007, the present petition was filed.

The petition satisfies the conditions for revival pursuant to the provisions of 37 CFR 1.137(b) in that petitioner has supplied (1) a reply in the form of an amendment; (2) the petition fee of $750; and (3) an adequate statement of unintentional delay.

The application is being referred to Technology Center AU 3676 for consideration of the amendment filed April 4, 2007.

Telephone inquiries concerning this decision should be directed to the undersigned at (571) 272-3204. Inquiries relating to further prosecution should be directed to the Technology Center.

Sherry D. Brinkley
Petitions Examiner
Office of Petitions

UNITED STATES PATENT AND TRADEMARK OFFICE

Commissioner for Patents
United States Patent and Trademark Office
P.O. Box 1450
Alexandria, VA 22313-1450
www.uspto.gov

JJGJr : 12-07

OSTROLENK, FABER,
GERB & SOFFEN, LLP
1180 Avenue of the Americas
New York NY 10036-8403

COPY MAILED
DEC 1 0 2007
OFFICE OF PETITIONS

In re Application of	:	
Labrie, et al.	:	
Application No. 10/387,043	:	DECISION
Filed: 10 March, 2003	:	
Attorney Docket No. P/1259-737	:	

This is a decision on the petition filed on 15 October, 2007, and considered as a request to withdraw the holding of abandonment under 37 C.F.R. §1.181.

The petition as considered under 37 C.F.R. §1.181 is **GRANTED**.

BACKGROUND

The record reflects that:

- Petitioner failed to reply timely and properly to the final Office action mailed on 9 February, 2007, with reply due absent extension of time on or before 9 May, 2007;
- the application went abandoned after midnight 9 May, 2007;
- the Office mailed the Notice of Abandonment on 20 September, 2007;
- on 15 October, 2007, Petitioner filed the instant petition with, *inter alia*, an averment that a reply in the form of a Notice of Appeal with fee was filed with a request and fee for extension of time (which was charged) on Monday 13 August, 2007, over a 9 August, 2007, certificate of mail, and Petitioner made such showings with copies of documents (including the reply and the date-stamped ("AUG 13 2007") receipt card (see: MPEP

'503[1]) and of the reply and made such statements of Petitioner's own knowledge as set forth in the guidance in the Commentary at MEEP §711.03(c).

The availability of applications and application papers online to applicants/practitioners who diligently associate their Customer Number with the respective application(s) now provides an applicant/practitioner on-demand information as to events/transactions in an application. Thus, now if one wishes to know the progress in and/or status of an application or the accuracy of the data therein, one need only look at the file online.

Out of an abundance of caution, Petitioners always are reminded that the filing of a petition under 37 C.F.R. §1.181 does not toll any periods that may be running any action by the Office and a petition seeking relief under the regulation must be filed within two (2) months of the act complained of (see: 37 C.F.R. §1.181(f)), and that those registered to practice and all others who make representations before the Office are reminded to inquire into the underlying facts of representations made to the Office and support averments with the appropriate documentation– since all owe to the Office the continuing duty to disclose.[2]

---

[1] MPEP '503 provides in pertinent part:

'503 Application Number and Filing Receipt

* * *

A return postcard should be attached to *each* patent application for which a receipt is desired. It is important that the return postcard itemize all of the components of the application. If the postcard does not itemize each of the components of the application, it will not serve as evidence that any component which was not itemized was received by the United States Patent and Trademark Office (USPTO). It should be recognized that the identification of an application by application number does not necessarily signify that the USPTO has accepted the application as complete (37 C.F.R. '1.53(a)).

* * *

RETURN POSTCARD

If a receipt of any item (e.g., paper or fee) filed in the USPTO is desired, it may be obtained by enclosing with the paper a self-addressed postcard specifically identifying the item. The USPTO will stamp the receipt date on the postcard and place it in the outgoing mail. A postcard receipt which itemizes and properly identifies the items which are being filed serves as *prima facie* evidence of receipt in the USPTO of all the items listed thereon on the date stamped thereon by the USPTO.

The identifying data on the postcard should be so complete as to clearly identify the item for which receipt is requested. For example, the postcard should identify the applicant=s name, application number (if known), confirmation number (if known), filing date, interference number, title of the invention, etc. The postcard should also identify the type of paper being filed, e.g., new application, affidavit, amendment, notice of appeal, appeal brief, drawings, fees, motions, supplemental oath or declaration, petition, etc., and the number of pages being submitted. If a new application is being filed, all parts of the application being submitted should be separately listed on the postcard, e.g., the number of pages of specification (including written description, claims and abstract), number of claims, number of sheets of drawings, number of pages of oath/declaration, number of pages of cover sheet (provisional application).

The postcard receipt will not serve as *prima facie* evidence of receipt of any item which is not adequately itemized on the postcard. For example, merely listing on the postcard Aa complete application@ or Apatent application@ will not serve as a proper receipt for each of the required components of an application (e.g., specification (including claims), drawings (if necessary), oath or declaration and the application filing fee) or missing portions (e.g., pages, sheets of drawings) of an application if one of the components or portion of a component is found to be missing by the USPTO. Each separate component should be specifically and properly itemized on the postcard. Furthermore, merely incorporating by reference in the postcard receipt, the items listed in a transmittal letter will not serve as *prima facie* evidence of receipt of those items.

The person receiving the item(s) in the USPTO will check the listing on the postcard against the item(s) being filed to be sure they are properly identified and that all the items listed on the postcard are presently being submitted to the USPTO. If any of the items listed on the postcard are not being submitted to the USPTO, those items will be crossed off and the post-card initialed by the person receiving the items. Upon return of a postcard receipt from the USPTO, the postcard receipt should be promptly reviewed by the person who filed the items to ensure that every item specifically denoted on the postcard was received by the USPTO. If the postcard receipt has been annotated to indicate that a particular item denoted on the postcard was not received by the USPTO, the postcard receipt will not serve as *prima facie* evidence of receipt of that item in the USPTO. (Emphasis supplied.)

[2] See supplement of 17 June, 1999. The Patent and Trademark Office is relying on petitioner's duty of candor and good faith and accepting a statement made by Petitioner. See Changes to Patent Practice and Procedure, 62 Fed. Reg. at 53160 and 53178, 1203 Off. Gaz. Pat. Office at 88 and 103 (responses to comments 64 and 109)(applicant obligated under 37 C.F.R. §10.18 to inquire into the underlying facts and circumstances when providing statements to the Patent and Trademark Office).

STATUTES, REGULATIONS AND ANALYSIS

Congress has authorized the Commissioner to "revive an application if the delay is shown to the satisfaction of the Commissioner to have been "unavoidable." 35 U.S.C. §133 (1994).[3]

The regulations at 37 C.F.R. §1.137(a) and (b) set forth the requirements for a petitioner to revive a previously unavoidably or unintentionally, respectively, abandoned application under this congressional grant of authority.

The language of 35 U.S.C. §133 and 37 C.F.R. §1.137(a) is clear, unambiguous, and without qualification: the delay in tendering the reply to the outstanding Office action, as well as filing the first petition seeking revival, must have been unavoidable for the reply now to be accepted on petition.[4]

Specifically, the regulations at 37 C.F.R. §10.18 provide:

§ 10.18 Signature and certificate for correspondence filed in the Patent and Trademark Office.
(a) For all documents filed in the Office in patent, trademark, and other non-patent matters, except for correspondence that is required to be signed by the applicant or party, each piece of correspondence filed by a practitioner in the Patent and Trademark Office must bear a signature by such practitioner complying with the provisions of §1.4(d), §1.4(e), or § 2.193(c)(1) of this chapter.
(b) By presenting to the Office (whether by signing, filing, submitting, or later advocating) any paper, the party presenting such paper, whether a practitioner or non-practitioner, is certifying that—
(1) All statements made therein of the party's own knowledge are true, all statements made therein on information and belief are believed to be true, and all statements made therein are made with the knowledge that whoever, in any matter within the jurisdiction of the Patent and Trademark Office, knowingly and willfully falsifies, conceals, or covers up by any trick, scheme, or device a material fact, or makes any false, fictitious or fraudulent statements or representations, or makes or uses any false writing or document knowing the same to contain any false, fictitious or fraudulent statement or entry, shall be subject to the penalties set forth under 18 U.S.C. 1001, and that violations of this paragraph may jeopardize the validity of the application or document, or the validity or enforceability of any patent, trademark registration, or certificate resulting therefrom; and
(2) To the best of the party's knowledge, information and belief, formed after an inquiry reasonable under the circumstances, that —
(i) The paper is not being presented for any improper purpose, such as to harass someone or to cause unnecessary delay or needless increase in the cost of prosecution before the Office;
(ii) The claims and other legal contentions therein are warranted by existing law or by a nonfrivolous argument for the extension, modification, or reversal of existing law or the establishment of new law;
(iii) The allegations and other factual contentions have evidentiary support or, if specifically so identified, are likely to have evidentiary support after a reasonable opportunity for further investigation or discovery; and
(iv) The denials of factual contentions are warranted on the evidence, or if specifically so identified, are reasonably based on a lack of information or belief.
(c) Violations of paragraph (b)(1) of this section by a practitioner or non-practitioner may jeopardize the validity of the application or document, or the validity or enforceability of any patent, trademark registration, or certificate resulting therefrom. Violations of any of paragraphs (b)(2)(i) through (iv) of this section are, after notice and reasonable opportunity to respond, subject to such sanctions as deemed appropriate by the Commissioner, or the Commissioner's designee, which may include, but are not limited to, any combination of —
(1) Holding certain facts to have been established;
(2) Returning papers;
(3) Precluding a party from filing a paper, or presenting or contesting an issue;
(4) Imposing a monetary sanction;
(5) Requiring a terminal disclaimer for the period of the delay; or
(6) Terminating the proceedings in the Patent and Trademark Office.
(d) Any practitioner violating the provisions of this section may also be subject to disciplinary action. See § 10.23(c)(15).
[Added 50 FR 5175, Feb. 6, 1985, effective Mar. 8, 1985; para. (a) revised, 58 FR 54494, Oct. 22, 1993, effective Nov. 22, 1993; paras. (a) & (b) revised, paras. (c) & (d) added, 62 FR 53131, Oct. 10, 1997, effective Dec. 1, 1997; para. (a) revised, 69 FR 56481, Sept. 21, 2004, effective Oct. 21, 2004]

[3] 35 U.S.C. §133 provides:
35 U.S.C. §133 Time for prosecuting application.
Upon failure of the applicant to prosecute the application within six months after any action therein, of which notice has been given or mailed to the applicant, or within such shorter time, not less than thirty days, as fixed by the Commissioner in such action, the application shall be regarded as abandoned by the parties thereto, unless it be shown to the satisfaction of the Commissioner that such delay was unavoidable.

Delays in responding properly raise the question whether delays are unavoidable.[4] Where there is a question whether the delay was unavoidable, Petitioners must meet the burden of establishing that the delay was unavoidable within the meaning of 35 U.S.C. §133 and 37 C.F.R. §1.137(a).[5]

And the Petitioner must be diligent in attending to the matter.[6] Failure to do so does not constitute the care required under Pratt, and so cannot satisfy the test for diligence and due care.

(By contrast, unintentional delays are those that do not satisfy the very strict statutory and regulatory requirements of unavoidable delay, and also, by definition, are not intentional.[7]))

Allegations as to the Request to
Withdraw the Holding of Abandonment

The courts have determined the construct for properly supporting a petition seeking withdrawal of a holding of abandonment.[8]

The commentary at MPEP §711.03(c) provides in pertinent part:

* * *

> **B. Petition To Withdraw Holding of Abandonment Based on Evidence That a Reply Was Timely Mailed or Filed**
>
> 37 C.F.R. §1.10(c) through §1.10(e) and §1.10(g) set forth procedures for petitioning the Director of the USPTO to accord a filing date to correspondence as of the date of deposit of the correspondence as "Express Mail." A petition to withdraw the holding of abandonment relying upon a timely reply placed in "Express Mail" must include an appropriate petition under 37 C.F.R. §1.10(c), (d), * (e), or (g) (see MPEP § 513). When a paper

---

4 See: *Changes to Patent Practice and Procedure*; *Final Rule Notice*, 62 *Fed. Reg.* at 53158-59 (October 10, 1997), 1203 *Off. Gaz. Pat. Office* at 86-87 (October 21, 1997).

5 See: In re Application of G, 11 USPQ2d 1378, 1380 (Comm'r Pats. 1989).

6 See: Diligence in Filing Petitions to Revive and Petitions to Withdraw the Holding of Abandonment, 1124 Off. Gaz. Pat. Office 33 (March 19, 1991). It was and is Petitioner's burden to exercise diligence in seeking either to have the holding of abandonment withdrawn or the application revived. See 1124 Off. Gaz. Pat. Office supra.

7 Therefore, by example, an unintentional delay in the reply might occur if the reply and transmittal form are to be prepared for shipment by the US Postal Service, but other pressing matters distract one's attention and the mail is not timely deposited for shipment.

8 See: Delgar v. Schulyer, 172 USPQ 513 (D.D.C. 1971).

is shown to have been mailed to the Office using the "Express Mail" procedures, the paper must be entered in PALM with the "Express Mail" date.

Similarly, applicants may establish that a reply was filed with a postcard receipt that properly identifies the reply and provides *prima facie* evidence that the reply was timely filed. See MPEP § 503. For example, if the application has been held abandoned for failure to file a reply to a first Office action, and applicant has a postcard receipt showing that an amendment was timely filed in response to the Office action, then the holding of abandonment should be withdrawn upon the filing of a petition to withdraw the holding of abandonment. When the reply is shown to have been timely filed based on a postcard receipt, the reply must be entered into PALM using the date of receipt of the reply as shown on the post card receipt.

Where a certificate of mailing under 37 C.F.R. §1.8, but not a postcard receipt, is relied upon in a petition to withdraw the holding of abandonment, see 37 C.F.R. §1.8(b) and MPEP § 512. As stated in 37 C.F.R §1.8(b)(3) the statement that attests to the previous timely mailing or transmission of the correspondence must be on a personal knowledge basis, or to the satisfaction of the Director of the USPTO. If the statement attesting to the previous timely mailing is not made by the person who signed the Certificate of Mailing (i.e., there is no personal knowledge basis), then the statement attesting to the previous timely mailing should include evidence that supports the conclusion that the correspondence was actually mailed (e.g., copies of a mailing log establishing that correspondence was mailed for that application). When the correspondence is shown to have been timely filed based on a certificate of mailing, the correspondence is entered into PALM with the actual date of receipt (i.e., the date that the duplicate copy of the papers was filed with the statement under 37 C.F.R. §1.8).

37 C.F.R. §1.8(b) also permits applicant to notify the Office of a previous mailing or transmission of correspondence and submit a statement under 37 C.F.R. 1.8(b)(3) accompanied by a duplicate copy of the correspondence when a reasonable amount of time (e.g., more than one month) has elapsed from the time of mailing or transmitting of the correspondence. Applicant does not have to wait until the application becomes abandoned before notifying the Office of the previous mailing or transmission of the correspondence. Applicant should check the private Patent

Application Information Retrieval (PAIR) system for the status of the correspondence before notifying the Office. See MPEP § 512.

* * *

And the regulation requires that relief be sought within two (2) months of the act complained of.

Petitioner appears to have satisfied the showing requirements herein.

CONCLUSION

The petition as considered under 37 C.F.R. §1.181 is **granted** and the 20 September, 2007, Notice of Abandonment is **vacated**.

The instant application is released to Technology Center 1600 for further processing in due course.

While telephone inquiries regarding this decision may be directed to the undersigned at (571) 272-3214, it is noted that all practice before the Office is in writing (see: 37 C.F.R. §1.2[9]) and the proper authority for action on any matter in this regard are the statutes (35 U.S.C.), regulations (37 C.F.R.) and the commentary on policy (MPEP). Therefore, no telephone discussion may be controlling or considered authority for Petitioner's action(s).

John J. Gillon, Jr.
Senior Attorney
Office of Petitions

---

[9] The regulations at 37 C.F.R. §1.2 provide:
§1.2 Business to be transacted in writing.
All business with the Patent and Trademark Office should be transacted in writing. The personal attendance of applicants or their attorneys or agents at the Patent and Trademark Office is unnecessary. The action of the Patent and Trademark Office will be based exclusively on the written record in the Office. No attention will be paid to any alleged oral promise, stipulation, or understanding in relation to which there is disagreement or doubt.

UNITED STATES PATENT AND TRADEMARK OFFICE

Commissioner for Patents
United States Patent and Trademark Office
P.O. Box 1450
Alexandria, VA 22313-1450
www.uspto.gov

COOK, ALEX, McFARRON, MANZO,
CUMMINGS & MEHLER, LTD.
200 WEST ADAMS STREET, SUITE 2850
CHICAGO, IL 60606

COPY MAILED
DEC 29 2006
OFFICE OF PETITIONS

In re Application of	:
Yoshifumi Tanada et al	:
Application No. 10/387,063	: DECISION GRANTING PETITION
Filed: March 12, 2003	: UNDER 37 CFR 1.313(c)(2)
Attorney Docket No. 0553-0355	:

This is a decision on the petition, filed December 28, 2006, under 37 CFR 1.313(c)(2) to withdraw the above-identified application from issue after payment of the issue fee.

The petition is **GRANTED**.

The above-identified application is withdrawn from issue for consideration of a submission under 37 CFR 1.114 (request for continued examination). See 37 CFR 1.313(c)(2).

Petitioner is advised that the issue fee paid on December 26, 2006 in the above-identified application cannot be refunded. If, however, the above-identified application is again allowed, petitioner may request that it be applied towards the issue fee required by the new Notice of Allowance.[1]

Telephone inquiries should be directed to the undersigned at (571) 272-3218.

This matter is being referred to Technology Center AU 2629 for processing of the request for continued examination under 37 CFR 1.114 and for consideration of the Information Disclosure Statement.

Frances Hicks
Frances Hicks
Petitions Examiner
Office of Petitions

C:\Documents and Settings\FHicks\My Documents\470\Dec10\387063.wpd

---

[1] *The request to apply the issue fee to the new Notice may be satisfied by completing and returning the new Part B – Fee(s) Transmittal Form (along with any balance due at the time of submission). Petitioner is advised that the Issue Fee Transmittal Form* ***must*** *be completed and timely submitted to avoid abandonment.*

SPE RESPONSE FOR CERTIFICATE OF CORRECTION

Paper No.: _____

DATE : 9-19-06

TO SPE OF : ART UNIT 2835

SUBJECT : Request for Certificate of Correction for Appl. No.: 10/387081 Patent No.: 6912119

Please respond to this request for a certificate of correction within 7 days.

Please review the requested changes/corrections as shown in the **COCIN** document(s) in the IFW application image. No new matter should be introduced, nor should the scope or meaning of the claims be changed.

Please check claims

Please complete the response (see below) and forward the completed response to scanning using document code **COCX**.

Certificates of Correction Branch

703-308-9390 ext. _____

Thank You For Your Assistance

The request for issuing the above-identified correction(s) is hereby:

Note your decision on the appropriate box.

- [X] **Approved** — All changes apply.
- [ ] **Approved in Part** — Specify below which changes do not apply.
- [ ] **Denied** — State the reasons for denial below.

Comments: _____

LYNN FEILD

SUPERVISORY PATENT EXAMINER

SPE

2835

Art Unit

SPE T. Meeks

SPE RESPONSE FOR CERTIFICATE OF CORRECTION 10/387,087

Paper No.: _____

DATE : 6/24/05

TO SPE OF : ART UNIT 1762

SUBJECT : Request for Certificate of Correction on Patent No.: 6803073

A response is requested with respect to the accompanying request for a certificate of correction.

Please complete this form and return with file, within 7 days to:
Palm location **7580, Certificates of Correction Branch – South Tower – 9A22**
If response is for an IFW, **return to employee (named below) via PUBSCofC Team in MADRAS.**
With respect to the change(s) requested, correcting Office and/or Applicant's errors, should the patent read as shown in the certificate of correction (COCIN)? No new matter should be introduced, nor should the scope or meaning of the claims be changed.

Lamonte M. Newsome

Thank You For Your Assistance

Certificates of Correction Branch
Tel. No. 703-305-8309

The request for issuing the above-identified correction(s) is hereby:
Note your decision on the appropriate box.

- [x] **Approved** — **All** changes apply.
- [ ] **Approved in Part** — Specify below which changes **do not** apply.
- [ ] **Denied** — State the reasons for denial below.

Comments:

TIMOTHY MEEKS
SUPERVISORY PATENT EXAMINER

SPE

1762
Art Unit

PTOL-306 (REV. 7/03)

U.S. DEPARTMENT OF COMMERCE Patent and Trademark Office

UNITED STATES PATENT AND TRADEMARK OFFICE

UNITED STATES DEPARTMENT OF COMMERCE
United States Patent and Trademark Office
Address: COMMISSIONER FOR PATENTS
P.O. Box 1450
Alexandria, Virginia 22313-1450
www.uspto.gov

APPLICATION NO.	FILING DATE	FIRST NAMED INVENTOR	ATTORNEY DOCKET NO.	CONFIRMATION NO.
10/387,095	03/12/2003	Michelle S. Hoo Fatt	UOA.417	1644

39905 7590 07/18/2006

ROETZEL AND ANDRESS
222 SOUTH MAIN STREET
AKRON, OH 44308

EXAMINER
NOORI, MAX H

ART UNIT	PAPER NUMBER
2855	

DATE MAILED: 07/18/2006

Please find below and/or attached an Office communication concerning this application or proceeding.

UNITED STATES PATENT AND TRADEMARK OFFICE

Commissioner for Patents
United States Patent and Trademark Office
P.O. Box 1450
Alexandria, VA 22313-1450
www.uspto.gov

ROETZEL AND ANDRESS
222 SOUTH MAIN STREET
AKRON, OH 44308

JUL 10 2006

In re Application of:	:	
Michelle S. Hoo Fatt et al.	:	DECISION ON PETITION TO
Serial No.: 10/387,095	:	WITHDRAW THE HOLDING
Filed: March 12, 2003	:	OF ABANDONMENT
Attorney Docket No.: UOA.417	:	

This is a decision on the "RESPONSE TO NOTICE OF ABANDONMENT" filed by mail on January 6, 2005 and supplemented by the filing of an Application Data Sheet via facsimile transmission on June 27, 2006. The combined papers are being treated as a petition to withdraw the holding of abandonment under 37 C.F.R. § 1.181. There is no fee for this petition.

The petition is **GRANTED**.

The application was held abandoned for failure to timely file a proper response to the Office action mailed on May 19, 2004. A Notice of Abandonment was mailed on November 29, 2004.

Petitioner asserts that a response and an Application Data Sheet were timely filed on August 23, 2004. To support this assertion, petitioner has submitted a copy of the response, a copy of the Application Data Sheet and a copy of a stamped return postcard which properly identifies and acknowledges receipt of the response and the Application Data Sheet by the Patent and Trademark Office (PTO) on August 23, 2004. The copy of the response includes a Certificate of Mailing dated August 19, 2004. It is concluded that the Application Data Sheet was deposited together with the response at the U.S Postal Service on August 19, 2004. Thus, if the response and Application Data Sheet had been received they would have been timely under the provisions of 37 C.F.R. § 1.8(a).

A review of the application file record reveals that the response and Application Data Sheet having been acknowledged on the stamped return postcard as being received in the PTO on August 23, 2004 are not of record in the application file and cannot be located. However, M.P.E.P. § 503 states that a postcard receipt which itemizes and properly identifies the items which are being filed serves as *prima facie* evidence of receipt in the PTO of all the items listed thereon on the date stamped thereon by the PTO. Accordingly, it is concluded that the response and Application Data Sheet were timely received but lost after receipt thereof.

For the above stated reason, the petition is granted. The Notice of Abandonment mailed November 29, 2004 is hereby **VACATED** and the holding of abandonment is withdrawn.

The copy of the response filed with the petition on January 6, 2005 and the copy of the Application Data Sheet filed on June 27, 2006 are accepted since the originally submitted response and originally submitted Application Data Sheet are lost.

The Technical Support Staff will enter the response filed with the petition on January 6, 2005 and the Application Data Sheet filed on June 27, 2006 into the Patent Application Locating and Monitoring System (PALM) and the examiner will prepare an action based upon that response and Application Data Sheet.

Any inquiries regarding this decision should be directed to Edward Westin at (571) 272-1638.

Arthur Grimley, Acting Director
Technology Center 2800
Semiconductors, Electrical and Optical
Systems and Components

UNITED STATES PATENT AND TRADEMARK OFFICE

COMMISSIONER FOR PATENTS
UNITED STATES PATENT AND TRADEMARK OFFICE
P.O. BOX 1450
ALEXANDRIA, VA 22313-1450
www.uspto.gov

Siemens Corporation
Intellectual Property Department
186 Wood Avenue South
Iselin, NJ 08830

COPY MAILED

APR 15 2005

OFFICE OF PETITIONS

In re Application of
Harrold et al.
Application No. 10/387,114
Filed: March 12, 2003
Attorney Docket No.
2003P01551US

ON PETITION

This is a decision on the Petition to Accept an Unintentionally Delayed Claim for Priority Under 35 U.S.C. [§] 120, filed February 1, 2005, to accept an unintentionally delayed claim under 35 U.S.C. § 120 for the benefit of priority to the prior-filed nonprovisional applications set forth in the amendment filed concurrently with the instant petition. The petition is properly treated under 37 CFR §§ 1.78(a)(3) and (a)(6).

The petition is **GRANTED**.

A petition for acceptance of a claim for late priority under 37 CFR §§ 1.78(a)(3) and (a)(6) is only applicable to those applications filed on or after November 29, 2000. Further, the petition is appropriate only after the expiration of the period specified in 37 CFR §§ 1.78(a)(2) and (a)(5). In addition, the petition under 37 CFR 1.78(a)(3) and (a)(6) must be accompanied by:

(1) the reference required by 35 U.S.C. § 120 and 37 CFR 1.78(a)(2) and (a)(5) of the prior-filed application, unless previously submitted;
(2) the surcharge set forth in § 1.17(t); and
(3) a statement that the entire delay between the date the claim was due under 37 CFR 1.78(a)(2) and (a)(5) and the date the claim was filed was unintentional.

> The Commissioner may require additional information where there is a question whether the delay was unintentional.

The instant nonprovisional application was filed after November 29, 2000, and the claim herein for the benefit of priority to the prior-filed applications is submitted after expiration of the period specified in 37 CFR 1.78(a)(2) and (a)(5). Therefore, this is a proper petition under 37 CFR §§ 1.78(a)(3) and (a)(6).

The petition complies with the requirements for a grantable petition under 37 CFR §§ 1.78(a)(3) and (a)(6) in that (1) a reference to the above-noted, prior-filed applications has been included in an amendment to the first sentence of the specification following the title, as provided by 37 CFR 1.78(a)(2) and (a)(5); (2) the surcharge fee required by 37 CFR 1.17(t) has been submitted; and (3) the petition contains a proper statement of unintentional delay. Accordingly, having found that the instant petition for acceptance of an unintentionally delayed claim for the benefit of priority under 35 U.S.C. § 120 to the above-noted, prior-filed applications satisfies the conditions of 37 CFR §§ 1.78(a)(3) and (a)(6), the petition is granted.

The granting of the petition to accept the delayed benefit claim to the prior-filed applications under 37 CFR §§ 1.78(a)(3) and (a)(6) should not be construed as meaning that the instant application is entitled to the benefit of the prior-filed applications. In order for the instant application to be entitled to the benefit of the prior-filed applications, all other requirements under 35 U.S.C. § 120; 37 CFR 1.78(a)(1) and (a)(2) and 37 CFR 1.78(a)(4) and (a)(5) must be met. Similarly, the fact that the corrected Filing Receipt accompanying this decision on petition includes the prior-filed applications should not be construed as meaning that applicant is entitled to the claim for benefit of priority to the prior-filed applications noted thereon. Accordingly, the examiner will, in due course, consider this benefit claim and determine whether the instant application is entitled to the benefit of the earlier filing date.

A corrected Filing Receipt, which includes the priority claim to the prior-filed applications, accompanies this decision on petition.

Because the address on the petition is different from the address of record, if Petitioner desires to receive further correspondence with respect to this application, a change of correspondence address must be filed. A courtesy copy of this Decision is being forwarded to Petitioner at the address appearing on the petition; however, all future correspondence will be sent to address of record until instructions to the contrary are received.

Any inquiries concerning this decision may be directed to Petitions Attorney Derek L. Woods at (571) 272-3232. All other inquiries concerning either the examination procedures or status of the application should be directed to the Technology Center.

This application is being forwarded to Technology Center Art Unit 2855 for appropriate action on the amendment filed February 1, 2005, including consideration by the examiner of applicant's entitlement to claim benefit of priority under 35 U.S.C. §§ 119(e) and 120 to the prior-filed applications.

Frances Hicks

Frances Hicks
Lead Petitions Examiner
Office of Petitions

Enclosure: Corrected Filing Receipt

Cc: BEUSSE BROWNLEE WOLTER
MORE & MAIRE, P.A.
390 NORTH ORANGE AVENUE
SUITE 2500
ORLANDO, FL 32801

UNITED STATES PATENT AND TRADEMARK OFFICE

Commissioner for Patents
United States Patent and Trademark Office
P.O. Box 1450
Alexandria, VA 22313-1450
www.uspto.gov

OGILVY RENAULT
1981 MCGILL COLLEGE AVENUE
SUITE 1600
MONTREAL, QC H3A2Y3
CANADA

COPY MAILED

DEC 0 7 2004

OFFICE OF PETITIONS

In re Application of	:	
Marc Lessard et al	:	
Application No. 10/387,128	:	ON PETITION
Filed: March 13, 2003	:	
Attorney Docket No. 13052-1US-2	:	

This is a decision on the petition under 37 CFR 1.78(a)(3), filed October 27, 2004 and supplemented on October 28, 2004, to accept an unintentionally delayed claim under 35 U.S.C.§ 120 for the benefit of prior-filed nonprovisional Application No. 09/817,279, filed March 27, 2001.

The petition is **DISMISSED AS MOOT**.

A petition under 37 CFR 1.78(a)(3) is only applicable to those applications filed on or after November 29, 2000.

Along with the instant petition under 37 CFR 1.78(a)(3), petitioner has submitted an amendment to the first sentence of the specification following the title to include a reference to prior-filed nonprovisional Application No. 09/817,279, filed March 27, 2001.

The instant pending nonprovisional application was filed on March 13, 2003, and was pending at the time of filing of the instant petition. While a reference to the prior-filed nonprovisional application was not included in an ADS or in the first sentence of the specification following the title, reference nevertheless was made in the transmittal letter filed with the above-identified application.

The current procedure where a claim for priority under 37 CFR 1.78(a)(3) is not included in the first sentence of the specification or in an ADS but does appear either in the oath or declaration or a transmittal letter filed with the application and the Office notes the claim for priority, no petition will be required to accept a late claim for priority. This is because the application would have been scheduled for publication on the basis of the information concerning the claim submitted elsewhere in the application within the time period set forth in 37 CFR 1.78(a)(2). However, on the other hand, if the USPTO does not note the claim for priority to the nonprovisional application in the oath or declaration or transmittal letter submitted with the application, a petition will be required to accept a late claim for priority under 37 CFR 1.78(a)(3).[1] In the instant case, the Office noted the claim for priority

[1] Note 66 Federal Register 67087 at 67089 (Dec. 28, 2001), effective December 28, 2001.

of nonprovisional Application No. 09/817,279 in the transmittal letter filed with the application, as shown by its inclusion on the filing receipt.

A reference to add the above-noted, prior-filed application has been included in the amendment filed with the instant petition on October 27, 2004. However, the amendment is not acceptable as drafted since it improperly incorporates by reference the prior-filed applications. Petitioner's attention is directed to Dart Industries v. Banner, 636 F.2d 684, 207 USPQ 273 (C.A.D.C. 1980), where the court drew a distinction between a permissible 35 U.S.C. § 120 statement and the impermissible introduction of new matter by way of incorporation by reference in a 35 U.S.C. § 120 statement. In order for the incorporation by reference statement to be effective as a proper safeguard against the omission of a portion of a prior application, the incorporation by reference statement must be included in the specification-as-filed, or in an amendment specifically referred to in an oath or declaration executing the application. See In re deSeversky, *supra*. Note also MPEP 201.06(c).

Accordingly, a substitute amendment deleting the incorporation by reference statement is required.

Any questions concerning this decision on petition may be directed to Karen Creasy at (571) 272-3208. All other inquiries concerning either the examination procedures or status of the application should be directed to the Technology Center.

This application is being referred to Technology Center AU 3752 for consideration by the examiner of the claim under 35 U.S.C. § 120 and 37 CFR 1.78(a)(2) for the benefit of prior-filed nonprovisional Application No. 09/817,279, filed on March 27, 2001, and to await the submission of an amendment deleting the incorporation by reference statement to the prior-filed applications.

Karen Creasy

Karen Creasy
Petitions Examiner
Office of Petitions
Office of the Deputy Commissioner
for Patent Examination Policy

UNITED STATES PATENT AND TRADEMARK OFFICE

Commissioner for Patents
United States Patent and Trademark Office
P.O. Box 1450
Alexandria, VA 22313-1450
www.uspto.gov

STEVEN D. POWELL AND ARGAN JOHNSON,
STAR SEISMIC LLC
3070 RASMUSSEN ROAD SUITE 260
PARK CITY UT 84098

COPY MAILED

JAN 24 2007

OFFICE OF PETITIONS

In re Application of	:
Sridhara	:
Application No. 10/387,144	: DECISION GRANTING PETITION
Filed: March 11, 2003	: UNDER 37 CFR 1.137(b)
Attorney Docket No. 3028.01-5703US	:

This is a decision on the petition under 37 CFR 1.137(b), filed October 4, 2006, to revive the above-identified application.

The petition is **GRANTED**.

The petition satisfies the conditions for revival pursuant to the provisions of 37 CFR 1.137(b) in that (1) the reply in the form of the issue fee and publication fee; (2) the petition fee; and (3) the required statement of unintentional delay have been received. Accordingly, the reply to the Notice of Allowance of July 3, 2006, is accepted as having been unintentionally delayed.

Telephone inquiries concerning this decision should be directed to the undersigned at (571) 272-3208.

This matter is being referred to Patent Publication.

Karen Creasy

Karen Creasy
Petitions Examiner
Office of Petitions

UNITED STATES PATENT AND TRADEMARK OFFICE

Commissioner for Patents
United States Patent and Trademark Office
P.O. Box 1450
Alexandria, VA 22313-1450
www.uspto.gov

STEVEN D. POWELL
AND ARGAN JOHNSON
STAR SEISMIC, LLC
SUITE 260
3070 RASMUSSEN ROAD
PARK CITY UT 84098

COPY MAILED

SEP 25 2008

OFFICE OF PETITIONS

In re Patent No. 7,188,452 :
Issue Date: 13 March, 2007 :
Application No. 10/387,144 : ON PETITION
Filed: 11 March, 2003 :
Attorney Docket No. 3028.01-5703US :

This is a decision on the petition, filed on 25 January, 2008, which appears to request that the requirements of 37 C.F.R. §1.32 (and/or §1.36) be waived or suspended pursuant to 37 C.F.R. §1.183.

The Office regrets the delay in addressing this matter, however, the instant petition was presented to the attorneys in the Office of Petitions only at this writing.

The petition is **DISMISSED**.

The regulations at 37 C.F.R. §1.183 provide that in an extraordinary situation, when justice requires, any requirement of the regulations which is not a requirement of the statutes may be suspended or waived by the Commissioner.

The regulations at 37 C.F.R. §1.183 provide:

> **§ 1.183 Suspension of rules.**
> In an extraordinary situation, when justice requires, any requirement of the regulations in this part which is not a requirement of the statutes may be suspended or waived by the Director or the Director's designee, *sua sponte*, or on petition of the interested party, subject to such other requirements as may be imposed. Any petition under this section must be accompanied by the petition fee set forth in § 1.17(f).

The guidance provided in the Commentary at MPEP §402 provides in pertinent part:

402 Power of Attorney; Acting in a Representative Capacity [R-5] - 400 Representative of Inventor or Owner

402 Power of Attorney; Acting in a Representative Capacity [R-5]

***

37 C.F.R. §1.32 Power of attorney.

***

(b) A power of attorney must:
(1) Be in writing;
(2) Name one or more representatives in compliance with (c) of this section;
(3) Give the representative power to act on behalf of the principal; and
(4) Be signed by the applicant for patent (§1.41(b) or the assignee of the entire interest of the applicant.

***

An applicant may give a power of attorney to one or more patent practitioners or joint inventors (37 C.F.R. §1.31.

***

The guidance provided in the Commentary at MPEP §402.05 provides in pertinent part:

***

402.05 Revocation [R-5] - 400 Representative of Inventor or Owner
402.05 Revocation [R-5]

37 C.F.R. §1.36 Revocation of power of attorney; withdrawal of patent attorney or agent.
(a) **>A power of attorney, pursuant to §1.32(b), may be revoked at any stage in the proceedings of a case by an applicant for patent (§1.41(b)) or an assignee of the entire interest of the applicant, or the owner of the entire interest of a patent.

***

An assignment will not of itself operate as a revocation of a power previously given, but the assignee of the entire interest of the applicant may revoke previous powers of attorney and give another power of attorney of the assignee's own selection as provided in §1.32(b).<
(b) A registered patent attorney or patent agent who has been given a power of attorney pursuant to §1.32(b) may withdraw as attorney or agent of record upon application to and approval by the Director. The applicant or patent owner will be notified of the withdrawal of the registered patent attorney or patent agent.

***

Following the close of prosecution and issue, former Counsel sought on his own motion to withdraw, and that request was first rejected and then accepted once the formalities were satisfied.

Petitioner (as the executive on behalf of the averred licensee) apparently wishes to re-appoint former Counsel, but for whatever reason(s) has failed to act to do so—and has failed to explain why he has not done so.

(It appears that there may be conflicting documents as to assignment of authority, however, that issue is not before the Office.)

Petitioner has not demonstrated that there is an extraordinary situation such that justice requires waiver of the provisions of 37 C.F.R. §1.32 pursuant to 37 C.F.R. §1.183.

The petition is **dismissed**.

This application is released to IFW Files Repository.

While telephone inquiries regarding this decision may be directed to the undersigned at (571) 272-3214, it is noted that all practice before the Office is in writing (see: 37 C.F.R. §1.2[1]) and the proper authority for action on any matter in this regard are the statutes (35 U.S.C.), regulations (37 C.F.R.) and the commentary on policy (MPEP). Therefore, no telephone discussion may be controlling or considered authority for Petitioner's/Caller's action(s).

/John J. Gillon, Jr./
John J. Gillon, Jr.
Senior Attorney
Office of Petitions

[1] The regulations at 37 C.F.R. §1.2 provide:
§1.2 Business to be transacted in writing.
All business with the Patent and Trademark Office should be transacted in writing. The personal attendance of applicants or their attorneys or agents at the Patent and Trademark Office is unnecessary. The action of the Patent and Trademark Office will be based exclusively on the written record in the Office. No attention will be paid to any alleged oral promise, stipulation, or understanding in relation to which there is disagreement or doubt.

UNITED STATES PATENT AND TRADEMARK OFFICE

Commissioner for Patents
United States Patent and Trademark Office
P.O. Box 1450
Alexandria, VA 22313-1450
www.uspto.gov

PHARMACIA & UPJOHN
301 HENRIETTA STREET
0228-32-LAW
KALAMAZOO, MI 49007

COPY MAILED

JUN 28 2005

OFFICE OF PETITIONS

In re Application of	:	
Jian-Min Fu	:	
Application No. 10/387,159	:	DECISION GRANTING PETITION
Filed: March 12, 2003	:	UNDER 37 CFR 1.137(b)
Attorney Docket No. 00965.US1	:	

This is a decision on the petition under 37 CFR 1.137(b), filed February 4, 2005, to revive the above-identified application.

The petition is **GRANTED**.

The petition satisfies the conditions for revival pursuant to the provisions of 37 CFR 1.137(b) in that (1) the reply in the form of an amendment; (2) the petition fee of $1,500; and (3) the required statement of unintentional delay have been received. Accordingly, the reply to the nonfinal Office action of November 26, 2003 is accepted as having been unintentionally delayed.

There is no indication that the person signing the instant petition was ever given a power of attorney or authorization of agent to prosecute the above-identified application. If the person signing the instant petition desires to receive future correspondence regarding this application, the appropriate power of attorney or authorization of agent must be submitted. While a courtesy copy of this decision is being mailed to the person signing the instant petition, all future correspondence will be directed to the address of currently of record until such time as appropriate instructions are received to the contrary.

Telephone inquiries concerning this decision should be directed to the undersigned at (571) 272-3218.

This matter is being referred to Technology Center AU 1625 for appropriate action on the reply received February 4, 2005.

Frances Hicks
Petitions Examiner
Office of Petitions

cc:

Andrea Dorigo
Pfizer Inc., Patent Department
150 East 42nd Street - 5th Floor
New York, NY 10017-5755

UNITED STATES PATENT AND TRADEMARK OFFICE

Commissioner for Patents
United States Patent and Trademark Office
P.O. Box 1450
Alexandria, VA 22313-1450
www.uspto.gov

TOWNSEND, TOWNSEND AND CREW, LLP
TWO EMBARCADERO CENTER
8TH FLOOR
SAN FRANCISCO, CALIFORNIA 94111-3834

MAILED

JUL 12 2005

Technology Center 2100

In re Application of: Fujibayashi
Application No. 10/387,188
Filed: March 11, 2003
For: METHOD AND APPARATUS FOR SEAMLESS MANAGEMENT FOR DISASTER RECOVERY

DECISION ON PETITION FOR ACCELERATED EXAMINATION UNDER M.P.E.P.§708.02(VIII)

This is a response to the petition filed May 5, 2005 under 37 C.F.R. 102(d) and M.P.E.P. § 708.02(VIII): Accelerated Examination, to make the above-identified application special.

The Petition is **GRANTED**.

M.P.E.P. § 708.02, Section VIII which sets out the prerequisites for a grantable petition for Accelerated Examination under 37 C.F.R. § 102(d) states in relevant part:

A new application (one which has not received any examination by the examiner) may be granted special status provided that applicant (and this term includes applicant's attorney or agent) complies with each of the following items:

(a) Submits a petition to make special accompanied by the fee set forth in 37 CFR 1.17(h);

(b) Presents all claims directed to a single invention, or if the Office determines that all the claims presented are not obviously directed to a single invention, will make an election without traverse as a prerequisite to the grant of special status;

(c) Submits a statement(s) that a pre-examination search was made, listing the field of search by class and subclass, publication, Chemical Abstracts, foreign patents, etc. The pre-examination search must be directed to the invention as claimed in the application for which special status is requested. A search made by a foreign patent office satisfies this requirement;

(d) Submits one copy each of the references deemed most closely related to the subject matter encompassed by the claims if said references are not already of record; and

(e) Submits a detailed discussion of the references, which discussion points out, with the particularity required by 37 CFR 1.111 (b) and (c), how the claimed subject matter is patentable over the references.

Petition to Make Special **GRANTED** since all of the requirements for special status under MPEP § 708.02(VIII) have been met.

The application file is being forwarded to the Examiner for accelerated examination in accordance with the procedures set forth in M.P.E.P. §708.02, Section VIII. If the application is subsequently allowed, it will be given priority for printing. See M.P.E.P. §1309.

Brian L. Johnson
Special Program Examiner
Technology Center 2100
Computer Architecture, Software and Information Security
571-272-3595

7/6/05

AWK

UNITED STATES PATENT AND TRADEMARK OFFICE

Commissioner for Patents
United States Patent and Trademark Office
P.O. Box 1450
Alexandria, VA 22313-1450
www.uspto.gov

JOSEPH W. BAIN
ASKERMAN SENTERFITT
222 LAKEVIEW AVENUE, FOURTH FLOOR
P O BOX 3188
WEST PALM BEACH, FL 33402-3188

COPY MAILED

MAR 2 1 2005

OFFICE OF PETITIONS

In re Application of	:
Thomas H.S. Harris	:
Application No. 10/387,192	: DECISION GRANTING PETITION
Filed: March 11, 2003	: UNDER 37 CFR 1.313(c)(2)
Attorney Docket No. 6896-3	:

This is a decision on the petition, filed March 21, 2005, under 37 CFR 1.313(c)(2) to withdraw the above-identified application from issue after payment of the issue fee.

The petition is **GRANTED**.

The above-identified application is withdrawn from issue for consideration of a submission under 37 CFR 1.114 (request for continued examination). See 37 CFR 1.313(c)(2).

Petitioner is advised that the issue fee paid on March 8, 2004 in the above-identified application cannot be refunded. If, however, the above-identified application is again allowed, petitioner may request that it be applied towards the issue fee required by the new Notice of Allowance.[1]

Telephone inquiries should be directed to the undersigned at (571) 272-3218.

This matter is being referred to Technology Center AU 2851 for processing of the request for continued examination under 37 CFR 1.114 and for consideration of the concurrently filed amendment and Information Disclosure Statement.[2]

Frances Hicks
Frances Hicks
Petitions Examiner
Office of Petitions
Office of the Deputy Commissioner
for Patent Examination Policy

---

[1] *The request to apply the issue fee to the new Notice may be satisfied by completing and returning the new Issue Fee Transmittal Form PTOL-85(b), which includes the following language thereon: "Commissioner for Patents is requested to apply the Issue Fee and Publication Fee (if any) or re-apply any previously paid issue fee to the application identified above." Petitioner is advised that, whether a fee is indicated as being due or not, the Issue Fee Transmittal Form* ***must*** *be completed and timely submitted to avoid abandonment. Note the language in bold text on the first page of the Notice of Allowance and Fee(s) Due (PTOL-85).*

[2] Receipt is also acknowledged of corrected drawings, a marked up and clear substitute specification.

UNITED STATES PATENT AND TRADEMARK OFFICE

Commissioner for Patents
United States Patent and Trademark Office
P.O. Box 1450
Alexandria, VA 22313-1450
www.uspto.gov

A. Burgess Lowe
101 East Maple Street
North Canton, OH 44720

COPY MAILED
NOV 0 8 2006
OFFICE OF PETITIONS

In re Application of	:	
Abdallah et al.	:	
Application No. 10/387196	:	ON PETITION
Filing or 371(c) Date: 03/11/2003	:	
Title of Invention:	:	
AIR EXHAUST SYSTEM FOR	:	
A CLEANING MACHINE	:	

This is a decision on the Petition for Revival of an Application for Patent Abandoned Unintentionally Under 37 C.F.R. § 1.137(b), filed July 12, 2006.

This Petition is hereby **granted**.

Background

The above-identified application became abandoned for failure to timely reply to the non-final office action, mailed August 24, 2005. The Office action set a three (3) period for reply. Extensions of time under 37 CFR 1.136(a) were available. No reply having been received, the application became abandoned on November 25, 2005. A Notice of Abandonment was mailed May 1, 2006.

Applicant files the instant petition and Amendment in response to the Office action. Accordingly, the petition is granted.

The address given on the petition differs from the address of record; however, Office records do not indicate a change of address has been submitted. If appropriate, a change of address should be filed in accordance with MPEP 601.03. A courtesy copy of this decision is being mailed to the address given on the petition; however, the Office will mail all future correspondence solely to the address of record.

This application is being referred to Technology Center Art Unit 1744 for processing of the Amendment filed with the petition.

Telephone inquiries concerning this decision should be directed to the undersigned at (571) 272-3232.

Derek L. Woods
Attorney
Office of Petitions

CC: RENNER, KENNER, GREIVE
BOBACK, TAYLOR & WEBER
FIRST NATIONAL TOWER, 4TH FLOOR
AKRON, OH 44308-1456

PET DEC

RECEIVED
CENTRAL FAX CENTER
AUG 2 3 2004

PTO/SB/83 (09-03)
Approved for use through 11/30/2005. OMB 0651-0035
U.S. Patent and Trademark Office, U.S. DEPARTMENT OF COMMERCE
Under the Paperwork Reduction Act of 1995, no persons are required to respond to a collection of information unless it displays a valid OMB control number.

REQUEST FOR WITHDRAWAL AS ATTORNEY OR AGENT AND CHANGE OF CORRESPONDENCE ADDRESS

Application Number	10/387212
Filing Date	03/10/2003
First Named Inventor	Hodges, A.
Art Unit	1751
Examiner Name	Noguerola, A.
Attorney Docket Number	LFSCAN.083DV1C1

OFFICIAL

To: Commissioner for Patents
P.O. Box 1450
Alexandria, VA 22313-1450

NOV 3 0 2004
Approved
Jacqueline M. Stone, Director
Technology Center 1700

Please withdraw me as attorney or agent for the above identified patent application, and

- [ ] all the attorneys/agents of record.
- [ ] the attorneys/agents (with registration numbers) listed on the attached paper(s), or
- [X] the attorneys/agents associated with Customer Number 20995

NOTE: This box can only be checked when the power of attorney of record in the application is to all the practitioners associated with a customer number.

The reasons for this request are: Assignee (LifeScan, Inc.) is assuming responsibility for prosecution of application

CORRESPONDENCE ADDRESS

1. [ ] The correspondence address is NOT affected by this withdrawal.
2. [X] Change the correspondence address and direct all future correspondence to:

[ ] Customer Number:

OR

[X] Firm or Individual Name	LifeScan, Inc.				
Address	1000 Gibraltar Drive				
Address					
City	Milpitas	State	CA	Zip	95035
Country	USA				
Telephone	408.956.4066			Fax	408.956.4404
Name	Rose M. Thiessen				
Signature		Registration No.	40,202		
Date	August 23, 2004	Telephone No.	619.235.8550		

NOTE: Withdrawal is effective when approved rather than when received. Unless there are at least 30 days between approval of withdrawal and the expiration date of a time period for response or possible extension period, the request to withdraw is normally disapproved.

This collection of information is required by 37 CFR 1.36. The information is required to obtain or retain a benefit by the public which is to file (and by the USPTO to process) an application. Confidentiality is governed by 35 U.S.C. 122 and 37 CFR 1.14. This collection is estimated to take 12 minutes to complete, including gathering, preparing, and submitting the completed application form to the USPTO. Time will vary depending upon the individual case. Any comments on the amount of time you require to complete this form and/or suggestions for reducing this burden should be sent to the Chief Information Officer, U.S. Patent and Trademark Office, U.S. Department of Commerce, P.O. Box 1450, Alexandria, VA 22313-1450. DO NOT SEND FEES OR COMPLETED FORMS TO THIS ADDRESS. SEND TO: **Commissioner for Patents, P.O. Box 1450, Alexandria, VA 22313-1450.**

If you need assistance in completing the form, call 1-800-PTO-9199 and select option 2.

SPE RESPONSE FOR CERTIFICATE OF CORRECTION

Paper No.: _____

DATE : February 14, 2006

TO SPE OF : ART UNIT 2825

SUBJECT : Request for Certificate of Correction on Patent No.: 6,928,634/Appl.10/387,224

A response is requested with respect to the accompanying request for a certificate of correction.

Please complete this form and return with file, within **7** days to:
Palm location **7580, Certificates of Correction Branch – South Tower – 9A22**
If response is for an IFW, **return to employee (named below) via PUBSCofC Team in MADRAS.**
With respect to the change(s) requested, correcting Office and/or Applicant's errors, should the patent read as shown in the certificate of correction (COCIN)? No new matter should be introduced, nor should the scope or meaning of the claims be changed.

Magdalene Talley

Thank You For Your Assistance

Certificates of Correction Branch
Tel. No. 703-308-9309 ext. 116

The request for issuing the above-identified correction(s) is hereby:
Note your decision on the appropriate box.

- ☑ **Approved** — **All** changes apply.
- ☐ **Approved in Part** — Specify below which changes **do not** apply.
- ☐ **Denied** — State the reasons for denial below.

Comments:

JACK CHIANG
SUPERVISORY PATENT EXAMINER

SPE

2825
Art Unit

UNITED STATES PATENT AND TRADEMARK OFFICE

COMMISSIONER FOR PATENTS
UNITED STATES PATENT AND TRADEMARK OFFICE
P.O. BOX 1450
ALEXANDRIA, VA 22313-1450
www.uspto.gov

MAILED

FEB 26 2004

Office of the Director
Group 3600

David N. Makous, Esq.
Lewis, Brisbois, Bisgaard & Smith LLP
Suite #1200
221 North Figueroa Street
Los Angeles, CA 90012

In re Application of: Wayne W. Spani Serial No. 10/387,246 Filed: March 12, 2003 For: SALTWATER INTRUSION PREVENTION SYSTEM	DECISION ON PETITION TO MAKE SPECIAL (ENVIRONMENTAL QUALITY)

This is a decision on the petition filed June 13, 2003 under 37 CFR 1.102 (c) to make the above-identified application special under the procedure set forth in MPEP 708.02, Section V: Environmental Quality.

A grantable petition to make an application special under 37 C. F. R. 1.102(c), MPEP 708.02, Section V for an invention which materially enhances the quality of the environment of mankind by contributing to the restoration or maintenance of the basic life-sustaining elements-air, water and soil, must be accompanied by affidavits or declaration under 37 CFR 1.102 by the applicant or his attorney explaining how the invention contributes to the maintenance or restoration of one of these life sustaining elements.

The petition states in part that the invention: "(a) conserves fresh water by recovering thousands of gallons of fresh water normally discharged to the saltwater body, (b) creates a saltwater intrusion barrier at an interface of the saltwater and fresh water bodies to prevent the fresh water body from becoming brackish, (c) processes the recovered water to improve the quality thereof, (d) resupplies the fresh water source with processed fresh water, and (e) increases the amount of potable fresh water available for domestic use." This statement is adequate to establish for the record that the invention "materially enhances the quality of the environment of mankind by contributing to the restoration or maintenance of the basic life sustaining natural elements."

For the above stated reasons, the petition is **GRANTED**.

The examiner is directed (1) to make an interference search for possible interfering applications; (2) to promptly examine this application out of turn; and (3) if any interfering application is discovered, to examine such application simultaneously and state in the first official letter of such application that it is being taken out of turn because of a possible interference.

Petitioner is advised that this application will continue to be special, throughout its entire prosecution and pendency, including interference and appeal, if any, only if petitioner makes a prompt *bona fide* effort, in response to each Office action, to place the application in condition for allowance, even if it is necessary to conduct an interview with the examiner to accomplish this purpose.

Randolph A. Reese
Special Programs Examiner
Technology Center 3600
(703) 308-2121

RAR/mjz: 2/24/04

UNITED STATES PATENT AND TRADEMARK OFFICE

Commissioner for Patents
United States Patent and Trademark Office
P.O. Box 1450
Alexandria, VA 22313-1450
www.uspto.gov

THE WEBB LAW FIRM, P.C.
700 KOPPERS BUILDING
436 SEVENTH AVENUE
PITTSBURGH, PA 15219

COPY MAILED

MAR 3 1 2008

In re Application of	:	
HE, Yukai et al.	:	
Application No. 10/387,252	:	DECISION ON PETITION
Filed: March 12, 2003	:	TO WITHDRAW
Attorney Docket No. **3739-030265**	:	FROM RECORD
	:	

This is a decision on the Request to Withdraw as attorney or agent of record under 37 C.F.R. § 1.36(b), filed February 20, 2008.

The request is **APPROVED**.

A grantable request to withdraw as attorney/agent of record must be signed by every attorney/agent seeking to withdraw or contain a clear indication that one attorney is signing on behalf of another/others. A request to withdraw will not be approved unless at least 30 (thirty) days would remain between the date of approval and the later of the expiration date of a time to file a response or the expiration date of the maximum time period which can be extended under 37 C.F.R. § 1.136(a).

The request was signed by Kirk M. Miles on behalf of all attorneys of record who are associated with customer No. 28229. All attorneys/agents associated have been withdrawn. Applicant is reminded that there is no attorney of record at this time.

The request to change the correspondence of record is not acceptable as the requested correspondence address is not that of: (1) the first named signing inventor; or (2) an intervening assignee of the entire interest under 37 C.F.R 3.71. All future communications from the Office will be directed to the first named signing inventor.

There are no outstanding office actions at this time.

Telephone inquiries concerning this decision should be directed to the undersigned at 571-272-4231.

Michelle R. Eason
Paralegal Specialist
Office of Petitions

cc: **YUKAI HE**
5823 5TH AVENUE
APARTMENT 18
PITTSBURGH, PA 15232

cc: **BARBARA E. JOHNSON**
ATTORNEY AT LAW
555 GRANT STREET
SUITE 323
PITTSBURGH, PA 15219

UNITED STATES PATENT AND TRADEMARK OFFICE

UNITED STATES DEPARTMENT OF COMMERCE
United States Patent and Trademark Office
Address: COMMISSIONER FOR PATENTS
P.O. Box 1450
Alexandria, Virginia 22313-1450
www.uspto.gov

APPLICATION NO.	FILING DATE	FIRST NAMED INVENTOR	ATTORNEY DOCKET NO.	CONFIRMATION NO.
10/387,277	03/12/2003	Dan Arnold Norton	572-02	7083

7590 05/07/2004

William H. Eilberg ESQ.
THREE BALA PLAZA
SUITE 501 WEST
BALA CYNWYD, PA 19004

EXAMINER
DANG, HUNG XUAN

ART UNIT	PAPER NUMBER
2873	

DATE MAILED: 05/07/2004

Please find below and/or attached an Office communication concerning this application or proceeding.

UNITED STATES DEPARTMENT OF COMMERCE
United States Patent and Trademark Office

Address: COMMISSIONER OF PATENTS AND TRADEMARKS
Washington, D.C. 20231

APPLICATION NUMBER	FILING DATE	FIRST NAMED APPLICANT	ATTORNEY DOCKET NO.
10/387,277			

EXAMINER

ART UNIT	PAPER NUMBER

DATE MAILED:

NOTICE OF ABANDONMENT

This application is abandoned in view of:

☐ Applicant's failure to timely file a proper reply to the Office letter mailed on _____.

☐ A reply (with Certificate of Mailing or Transmission of _____) was received on _____ which is after the expiration of the period for reply (including a total extension of time of _____ month(s)) which expired on _____.

☐ A proposed reply was received on _____ , but it does not constitute a proper reply under 37 CFR 1.113 to the final rejection.
(A proper reply under 37 CFR 1.113 to a final rejection consists only of: (1) a timely filed amendment which places the application in condition for allowance; (2) a timely filed Notice of Appeal (with appeal fee); or (3) a timely filed Request for Continued Examination (RCE) in compliance with 37 CFR 1.114).

☐ A reply was received on _____ , but it does not constitute a proper reply, or a *bona fide* attempt at a proper reply, to the non-final rejection. See 37 CFR 1.85(a) and 1.111. (See explanation in the last box below).

☐ No reply has been received.

☒ Applicant's failure to timely pay the required issue fee and publication fee, if applicable, within the statutory period of three months from the mailing date of the Notice of Allowance (PTOL-85).

☐ The issue fee and publication fee, if applicable, was received on _____ (with a Certificate of Mailing or Transmission dated _____), which is after the expiration of the statutory period for payment of the issue fee (and publication fee) set in the Notice of Allowance (PTOL-85)(or Notice of Publication Fee Due).

☐ The submitted fee of $_____ is insufficient. A balance of $_____ is due.
The issue fee by 37 CFR 1.18 is $_____ . The publication fee, if required, by 37 CFR 1.18(d) is $_____.

☒ The issue fee and publication fee, if applicable, have not been received.

☐ Applicant's failure to timely file corrrected drawings as required by, and within the three-month period set in, the Notice of Allowability (PTOL-37).

☐ Proposed corrected drawings were received on _____ (with a Certificate of Mailing or Transmission dated _____), which is after the expiration of the period for reply.

☐ No corrected drawings have been received.

☐ The letter of express abandonment which is signed by the attorney or agent of record, the assignee of the entire interest, or all the applicants.

☐ The letter of express abandonment which is signed by an attorney or agent (acting in a representative capacity under 37 CFR 1.34(a)) upon filing of a continuing application.

☐ The decision by the Board of Patent Appeals and Interferences rendered on _____ and because the period for seeking court review of the decision has expired and there are no allowed claims.

☐ The reason(s) below: _____

Petitions to revive under 37 CFR 1.137(a) or (b), or requests to withdraw the holding of abandonment under 37 CFR 1.181, should be promptly filed to minimize any negative effects on patent term.

LeeD

UNITED STATES PATENT AND TRADEMARK OFFICE

COMMISSIONER FOR PATENTS
UNITED STATES PATENT AND TRADEMARK OFFICE
P.O. BOX 1450
ALEXANDRIA, VA 22313-1450
WWW.USPTO.GOV

Paper No.

ITREC B. V.
ADMIRAAL TROMPSTRAAT 2
MARTIN HEIJERMAN
3115 HH- PO BOX 150
SCHIEDAM 3110 AD
NETHERLANDS

MAILED

SEP 14 2009

OFFICE OF PETITIONS

In re Application of	:	
Roodenburg et al.	:	
Application No. 10/387,282	:	DECISION ON PETITION
Patent No. 6,926,259	:	PURSUANT TO
Filed: March 12, 2003	:	37 C.F.R. § 1.28(c)
Issued: August 9, 2005	:	
Attorney Docket No. 1141.17	:	
Title: HOIST SYSTEM	:	

This is a notice regarding your submission of March 16, 2009, which is properly treated as a request for acceptance of a fee deficiency submission under 37 C.F.R § 1.28(c). On September 1, 1998, the Court of Appeals for the Federal Circuit held that 37 CFR § 1.28(c) is the sole provision governing the time for correction of the erroneous payment of the issue fee as a small entity. See DH Technology v. Synergystex International, Inc. 154 F.3d 1333, 47 USPQ2d 1865 (Fed. Cir. Sept. 1, 1998).

The Office no longer investigates or rejects original or reissue applications under 37 C.F.R. § 1.56. 1098 Off. Gaz. Pat. Office 502 (January 3, 1989). Therefore, nothing in this notice is intended to imply that an investigation was done.

37 C.F.R. § 1.28(c)(2)(ii) sets forth that the party submitting the deficient payment must include:

(a) Each particular type of fee that was erroneously paid as a small entity, (e.g., basic statutory filing fee, two-month extension of time fee) along with the current fee amount for a non-small entity;
(b) The small entity fee actually paid, and when;
(c) The deficiency owed amount (for each fee erroneously paid); and
(d) The total deficiency payment owed, which is the

> sum or total of the individual deficiency owed amounts set forth in paragraph (c)(2)(ii)(C) of this section.

Petitioner has identified the particular type of fee that was erroneously paid as a small entity, and when the small entity fee was actually paid.

It does not appear that Petitioner has identified the small entity fee that was actually paid, the deficiency owed amount, or the total deficiency payment owed. However, Office records indicate that on February 10, 2009, $ 490 was submitted to the Office. As such, the requirement that Petitioner must provide the Office with the amount of the small entity fee that was actually paid along with the deficiency owed amount and the total deficiency payment owed is waived, *sua sponte*.

Your fee deficiency submission under 37 C.F.R. § 1.28 is hereby accepted. The petition is **GRANTED** accordingly.

This patent is now listed as a large entity.

It is noted that the address listed on the petition differs from the address of record. The application file does not indicate a change of correspondence address has been filed in this case, although the address given on the petition differs from the address of record. If Petitioner desires to receive future correspondence regarding this patent, the change of correspondence address must be submitted.

A courtesy copy of this decision will be mailed to Petitioner. However, all future correspondence will be directed to the address of record until such time as appropriate instructions are received to the contrary. Petitioner will not receive future correspondence related to this patent unless Change of Correspondence Address, Patent Form (PTO/SB/123) is submitted for the above-identified patent. For Petitioner's convenience, a blank Change of Correspondence Address, Patent Form (PTO/SB/123), may be found at http://www.uspto.gov/web/forms/sb0123.pdf.

A blank fee address form may be found at http://www.uspto.gov/web/forms/sb0047.pdf.

Telephone inquiries regarding *this decision* should be directed to the undersigned at (571) 272-3225.

Petitioner will note that all practice before the Office should be in writing, and the action of the Office will be based exclusively on the written record in the Office. See 37 C.F.R. § 1.2. As such, Petitioner is reminded that no telephone discussion may be controlling or considered authority for Petitioner's further action(s).

/Paul Shanoski/
Paul Shanoski
Senior Attorney
Office of Petitions

cc: CPI Packages Inc.
414 Hungerford Drive
Third Floor
Rockville, MD 20850

UNITED STATES PATENT AND TRADEMARK OFFICE

Commissioner for Patents
United States Patent and Trademark Office
P.O. Box 1450
Alexandria, VA 22313-1450
www.uspto.gov

Steptoe & Johnson
2121 Avenue of the Stars
Suite 900
Los Angeles, CA 90067

COPY MAILED

JUN 1 8 2007

OFFICE OF PETITIONS

In re Application of
Bradford et al.
Application No. 10/387,288
Filed: August 9, 2002

: DECISION DISMISSING PTA

This letter is in response to APPLICANTS' "REQUEST FOR RECONSIDERATION OF PATENT TERM ADJUSTMENT UNDER 1.705(b)" timely[1] filed on February 26, 2007 requesting that the Office adust the PTA determination at the time of the notice of allowance from a determination of five hundred and ninety-six (596) to days to a determination of 664 days.

The request submitted by appellants is **Dismissed.**

Applicants are given thirty days to respond to this decision. No extensions of time under 37 CFR 1.136 are available.

Applicants assert that they are entitled to a determination of 664 days at the time of the mailing of the notice of allowance. Applicants assert that the Office delayed 651 days under 37 CFR 1.702(a)(1). Applicants also agree that the Office delayed by a period of seventeen (17) days under 37 CFR 1.702(a)(2). Applicants assert that they delayed by a period of 4 days under 37 CFR 1.704)(b) for the submission of the response filed on December 21, 2005. Applicants dispute the reduction of patent term of sixty-eight days for the supplemental response filed on March 13, 2006. Applicants assert that the supplemental response was expressly requested by the examiner and therefore is not a reduction pursuant to 37 CFR 1.704(c)(8). As evidence of such reduction, applicants assert that the supplemental response was filed after a telephonic call with examiner Mosser on July 28, 2006. Applicants note that the telephonic call was cited in the Office action and further assert that they would not have filed the supplemental amendment unless examiner wanted the amendment because they already had a response on the record.

Applicants' arguments are not persuasive. The record is unclear as it relates to the supplemental response filed on August 2006. Although the record does reflect that the office action states that it is filed in response to a teleconference with Examiner Mosser on July 28, 2006, there is no record in the file that reflects the nature of the conversation between the examiner and the applicants.[2] Moreover, the remarks by applicants do not state that this amendment was filed at examiner's request. Moreover, the file reflects that the supplemental response did not put the

---

[1]Issue fee was paid on May, 2007,

[2]It is noted that the examiner failed to document the telephone conversation with an interview summary record.

case in condition for allowance. This make it more difficult to find that the examiner "expressly requested" that the supplemental amendment was "expressly requested" by the examiner. The statement by appellant that the amendment was filed on August 2, 2006 in response to the examiner's request is not sufficient.

Appellant needs to file an oath or declaration by the individual who conducted the interview on behalf of appellant and that individual must outline the conversation of the call including the key fact that the amendment was submitted in response to an express request by examiner Mosser that appellant file the supplemental amendment. The present record is insufficient to grant this petition.

The Office notes that this determination does not include any Office delays pursuant to 37 CFR 1.702(a)(4) or 1.702(b). Moreover, this determination does not include any reductions to patent term adjustment under 37 CFR 1.704(c)(10). These determinations will be included in the final PTA determination that is mailed to applicants in the Issue notification letter and displayed in PAIR.

The Office has assessed the $200.00 fee. No additional fees are required in determining this application for PTA.

This applications is being forwarded to the Office of Patent Publication for a prompt issuance of the patent.

Any questions related to this decision can be addressed to Kery Fries at 571-272-7757.

Kery A. Fries

Kery Fries
Senior Legal Advisor
Office of Patent Legal Administration
Office of Deputy Commissioner
for Patent Examination Policy

UNITED STATES PATENT AND TRADEMARK OFFICE

Commissioner for Patents
United States Patent and Trademark Office
P.O. Box 1450
Alexandria, VA 22313-1450
www.uspto.gov

BLYNN L. SHIDELER
THE BLK LAW GROUP
3500 BROKKTREE ROAD
SUITE 200
WEXFORD PA 15090

COPY MAILED

JUN 14 2007

OFFICE OF PETITIONS

In re Application of	:	
Daniel E. Schneider	:	
Application No. 10/387,295	:	DECISION ON PETITION
Filed: March 12, 2003	:	
Attorney Docket No. BevTech-0602	:	

This is a decision on the petition under the unintentional provisions of 37 CFR 1.137(b), filed August 29, 2006, to revive the above-identified application.

The petition is **GRANTED**.

This application became abandoned for failure to timely pay the issue and to submit corrected formal drawings on or before November 18, 2004, as required by the Notice of Allowance and Fee(s) Due and the Notice of Allowability, mailed August 18, 2004. Accordingly, the date of abandonment of this application is November 19, 2004 . The Notice of Abandonment was mailed January 10, 2005.

The petition satisfies the requirements of 37 CFR 1.137(b) in that petitioner has supplied (1) the reply in the form of payment of the issue fee of $700 , and corrected formal drawings , (2) the petition fee of $750; and (3) a proper statement of unintentional delay.

The above-identified application has been abandoned for an extended period of time. The Patent and Trademark Office is relying on the petitioner's duty of candor and good faith and accepting the statement the entire delay in filing the required reply from the due date for the reply until the filing of a grantable petition pursuant to 37 CFR 1.137(b) was unintentional.

The drawings have been approved by the USPTO draftsperson.

Telephone inquiries concerning this decision should be directed to Terri Williams at (571) 272-2991.

This application is being referred to Publishing Division for processing into a patent.

Liana Walsh
Petitions Examiner
Office of Petitions

UNITED STATES PATENT AND TRADEMARK OFFICE

Commissioner for Patents
United States Patent and Trademark Office
P.O. Box 1450
Alexandria, VA 22313-1450
www.uspto.gov

ROBERT DEBERARDINE
ABBOTT LABORATORIES
100 ABBOTT PARK ROAD
DEPT. 377/AP6A
ABBOTT PARK IL 60064-6008

COPY MAILED

DEC 23 2004

OFFICE OF PETITIONS

In re Application of
David Anderson et al. :
Application No. 10/387,318 : ON PETITION
Filed: March 12, 2003 :
Attorney Docket Number: 6893.US.02 :

This is a decision on the petition under 37 CFR 1.137(b), filed October 29, 2004, to revive the above identified application.

The petition is **GRANTED**.

This application became abandoned for failure to timely reply to the non-Final Office Action mailed March 8, 2004. A shortened statutory period of three months was set for replying to the non-Final Office Action. No extensions of time having been requested, this application became abandoned June 9, 2004. Accordingly, a Notice of Abandonment was mailed October 19, 2004.

Petitioner files the instant petition under 37 CFR 1.137(b). [1]

This application is being forwarded to Technology Center 1625 for appropriate action on the amendment filed October 29, 2004.

Telephone inquiries concerning this matter should be directed to the undersigned Petitions Attorney at (571) 272-3212.

Patricia Faison Ball

Patricia Faison-Ball
Senior Petitions Attorney
Office of Petitions

---

[1] Effective December 1, 1997, the provisions of 37 CFR 1.137(b) now provide that where the delay in reply was unintentional, a petition may be filed to revive an abandoned application or a lapsed patent pursuant to 37 CFR 1.137(b). A grantable petition filed under the provisions of 37 CFR 1.137(b) must be accompanied by:

(1) the required reply, unless previously filed. In a nonprovisional application abandoned for failure to prosecute, the required reply may be met by the filing of a continuing application. In an application or patent, abandoned or lapsed for failure to pay the issue fee or any portion thereof, the required reply must be the payment of the issue fee or any outstanding balance thereof.

(2) the petition fee as set forth in 37 CFR 1.17(m);

(3) a statement that the entire delay in filing the required reply from the due date for the reply until the filing of a grantable petition pursuant to 37 CFR 1.137(b) was unintentional. The Commissioner may required additional information where there is a question whether the delay was unintentional; and

(4) any terminal disclaimer (and fee as set forth in 37 CFR 1.20(d)) required pursuant to 37 CFR 1.137(c)).

UNITED STATES PATENT AND TRADEMARK OFFICE

Commissioner for Patents
United States Patent and Trademark Office
P.O. Box 1450
Alexandria, VA 22313-1450
www.uspto.gov

VOLPE AND KOENIG, P.C. NET APP
30 S. 17TH STREET
UNITED PLAZA, SUITE 1600
PHILADELPHIA PA 19103

COPY MAILED

MAR 0 5 2007

OFFICE OF PETITIONS

In re Patent No. 6,973,369 :
Issue Date: December 6, 2005 :
Application No. 10/387,319 :
Filed: March 12, 2003 :
Attorney Docket No.: **ALA-PT008** :

NOTICE

This is a notice regarding your request for acceptance of a fee deficiency submission under 37 CFR 1.28. On September 1, 1998, the Court of Appeals for the Federal Circuit held that 37 CFR 1.28(c) is the sole provision governing the time for correction of the erroneous payment of the issue fee as a small entity. **See DH Technology v. Synergystex International, Inc. 154 F.3d 1333, 47 USPQ2d 1865 (Fed. Cir. Sept. 1, 1998).**

The Office no longer investigates or rejects original or reissue applications under 37 CFR 1.56. **1098 Off. Gaz. Pat. Office 502 (January 3, 1989)**. Therefore, nothing in this Notice is intended to imply that an investigation was done.

Your fee deficiency submission under 37 CFR 1.28 is hereby **ACCEPTED**.

This application is no longer entitled to small entity status. Accordingly, all future fees paid in this application must be paid at the large entity rate.

Inquiries related to this communication should be directed to the undersigned at (571) 272-3205.

Alesia M. Brown
Petitions Attorney
Office of Petitions

UNITED STATES PATENT AND TRADEMARK OFFICE

COMMISSIONER FOR PATENTS
UNITED STATES PATENT AND TRADEMARK OFFICE
P.O. BOX 1450
ALEXANDRIA, VA 22313-1450
www.uspto.gov

DONALD J. POCHOPIEN
MCANDREWS, HELD & MALLOY, LTD.
34TH FLOOR
500 WEST MADISON STREET
CHICAGO, IL 60661

COPY MAILED

OCT 23 2003

OFFICE OF PETITIONS

In re Application of
John R. Bianchi, C. Randal Mills, P.J. Gorham, Michael Esch, Kevin C. Carter (Deceased), Pat Coleman, Kevin Ross, Harry W. Rambo, Darren G. Jones, Dayna Buskirk and Russell S. Donda
Application No. 10/387,322
Filed: December 23, 2002
Title: ASSEMBLED IMPLANT, INCLUDING MIXED-COMPOSITION SEGMENT

: DECISION GRANTING PETITION UNDER 37 CFR 1.47(a)

This is in response to the "Petition Under 37 CFR 1.47(a)," filed September 26, 2003.

The petition is **granted**.

Petitioner has shown that the non-signing inventor (Administrator of the Estate of Kevin C. Carter, Diane Carter) has refused to join in the filing of the above-identified application.

The above-identified application and papers have been reviewed and found in compliance with 37 CFR 1.47(a). This application is hereby accorded Rule 1.47(a) status. As provided in Rule 1.47(c), this Office will forward notice of this application's filing to the non-signing inventor at the address given in the Declaration. Notice of the filing of this application will also be published in the Official Gazette.

The file is being forwarded to The Office of Initial Patent Examination for further processing.

Telephone inquiries regarding this decision should be directed to the undersigned at (703) 306-9200.

Edward J. Tannouse
Senior Petitions Attorney
Office of Petitions
United States Patent and Trademark Office

OIPE JC67
SEP 2 6 2003
PATENT & TRADEMARK OFFICE

LAW OFFICES
McANDREWS, HELD & MALLOY, LTD.
34TH FLOOR
500 WEST MADISON STREET
CHICAGO, ILLINOIS 60661
TELEPHONE: (312) 775-8000
FACSIMILE: (312) 775-8100
WWW.MHMLAW.COM

RECEIVED
SEP 3 0 2003
OFFICE OF PETITIONS

GEORGE E. ANDREWS
JOHN J. HELD
TIMOTHY J. MALLOY
WILLIAM M. WESLEY
LAWRENCE M. JARVIS
GREGORY J. VOGLER
JEAN DUDEK KUELPER
HERBERT D. HART III
ROBERT W. FIESELER
THOMAS J. WIMBISCUS
STEVEN J. HAMPTON
PRISCILLA F. GALLAGHER
STEPHEN F. SHERRY
PATRICK J. ARNOLD JR.
GEORGE F. WHEELER
JANET M. McNICHOLAS
RONALD E. LARSON
CHRISTOPHER C. WINSLADE
EDWARD A. MAS II
GREGORY C. SCHODDE
EDWARD W. REMUS
DONALD J. POCHOPIEN
SHARON A. HWANG
DAVID D. HEADRICK
DEAN D. SMALL
ALEJANDRO MENCHACA
KIRK A. VANDER LEEST
RICHARD T. McCAULLEY JR.
MELISSA M. McCAULLEY
ANTHONY E. DOWELL
PETER J. McANDREWS
LELAND G. HANSEN
JAMES M. HAFERTEPE
JONATHAN R. SICK
ELIGIO C. PIMENTEL
JAMES P. MURPHY
DEAN A. PELLETIER
MICHAEL B. HARLIN
GEOFFREY A. BAKER
JAMES R. NUTTALL
ROBERT A. SURRETTE
TIMOTHY L. HARNEY
JOSEPH M. BARICH
SCOTT P. McBRIDE
PATRICIA J. McGRATH
WILHELM L. RAO
SANDRA A. FRANTZEN
RONALD H. SPUHLER
CHRISTOPHER V. CARANI
RONALD A. DICERBO
JENNIFER E. LACROIX
JOSEPH F. HARDING
JOSEPH M. BUTSCHER
TROY A. GROETKEN
GERALD C. WILLIS
SARA J. BARTOS
JOHN A. WIBERG
JOHN L. ABRAMIC
DAVID Z. PETTY
MICHAEL T. CRUZ*
MIRUT P. DALAL**
CHRISTOPHER N. GEORGE
MATTHEW A. ANDERSON
YUFENG MA
DENNIS H. JASKOVIAK
DEBORAH A. LAUGHTON
WILLIAM B. GONT
DENNIS P. HACKETT
HEATHER A. BJELLA
DAVID R. BETO

OF COUNSEL
S. JACK SAUER

*ADMITTED TO PRACTICE IN CA
**ADMITTED TO PRACTICE IN TX

December 17, 2002

VIA FEDERAL EXPRESS / PRIORITY OVER NIGHT

Larry Ciesla, Esq.
204 West University Avenue
Suite #4
Gainesville, Florida 32601

Re: Signature by Diane Carter
Administrator of Kevin C. Carter's Estate
1) U.S. Patent Application Serial No. 09/941,154

RTI Reference No.: RTI 112R IA
Our Reference No. 1915/13980US03

Dear Mr. Ciesla:

I am patent counsel for Regeneration Technologies, Inc. ("RTI"), the former employer of Kevin C. Carter, how deceased. Kevin C. Carter is one of the inventors of the above-identified patent application, a copy of which is enclosed. This application is different than the prior patent applications that we enclosed, and sent to you in relation to Kevin C. Carter's estate.

It is our understanding that Kevin C. Carter's wife, Diane Carter, is the Administrator of his estate. It is our further understanding that Diane Carter is represented by yourself as her attorney.

Please request that Diane Carter review her husband's patent application and if acceptable, sign and date the enclosed Declaration where indicated. Time is of the essence. We have an absolute deadline to respond to the Patent Office and must have the signed Declaration or Diane Carter's adverse decision by **December 23, 2002**. A prepaid, pre-addressed Federal Express envelope is enclosed. Ms. Carter may keep the copy of the patent application.

We thank you for your assistance. You may bill us for your time in obtaining Diane Carter's signature.

Sincerely,

Donald J. Pochopien

:gl
Enclosures

OIPE JC87
SEP 2 6 2003
PATENT & TRADEMARK OFFICE

LAW OFFICES
McANDREWS, HELD & MALLOY, LTD.
34TH FLOOR
500 WEST MADISON STREET
CHICAGO, ILLINOIS 60661
TELEPHONE: (312) 775-8000
FACSIMILE: (312) 775-8100
WWW.MHMLAW.COM

RECEIVED
SEP 3 0 2003
OFFICE OF PETITIONS

GEORGE F. McANDREWS
JOHN J. HELD
TIMOTHY J. MALLOY
WILLIAM M. WESLEY
LAWRENCE M. JARVIS
GREGORY J. VOGLER
JEAN DUDEK KUELPER
HERBERT D. HART III
ROBERT W. FIESELER
THOMAS J. WIMBISCUS
STEVEN J. HAMPTON
PRISCILLA F. GALLAGHER
STEPHEN F. SHERRY
PATRICK J. ARNOLD JR.
GEORGE F. WHEELER
JANET M. McNICHOLAS
RONALD E. LARSON
CHRISTOPHER C. WINSLADE
EDWARD A. MAS II
GREGORY C. SCHODDE
EDWARD W. REMUS
DONALD J. POCHOPIEN
SHARON A. HWANG
DAVID D. HEADRICK
DEAN D. SMALL
ALEJANDRO MENCHACA
KIRK A. VANDER LEEST
RICHARD T. McCAULLEY JR.
MELISSA M. McCAULLEY
ANTHONY E. DOWELL
PETER J. McANDREWS
LELAND G. HANSEN
JAMES M. HAFERTEPE
JONATHAN R. SICK
ELIGIO C. PIMENTEL
JAMES P. MURPHY
DEAN A. PELLETIER
MICHAEL B. HARLIN
GEOFFREY A. BAKER
JAMES R. NUTTALL
ROBERT A. SURRETTE
TIMOTHY L. HARNEY
JOSEPH M. BARICH
SCOTT P. McBRIDE
PATRICIA J. McGRATH
WILHELM L. RAO
SANDRA A. FRANTZEN
RONALD H. SPUHLER
CHRISTOPHER V. CARANI
RONALD A. DiCERBO
JENNIFER E. LACROIX
JOSEPH F. HARDING
JOSEPH M. BUTSCHER
TROY A. GROETKEN
GERALD C. WILLIS
SARA J. BARTOS
JOHN A. WIBERG
JOHN L. ABRAMIC
MICHAEL J. FITZPATRICK
DAVID Z. PETTY
GENE W. LEE
MICHAEL T. CRUZ

OF COUNSEL
S. JACK SAUER

August 20, 2002

VIA FACSIMILE *AND* FEDERAL EXPRESS

Larry Ciesla, Esq.
204 West University Avenue
Suite #4
Gainesville, Florida 32601

Re: Signature by Diane Carter,
Administrator Of Kevin C. Carter's Estate
1) U.S. Patent Application No. 09/924,110
2) U.S. Patent Application No. 10/013,328
Our Reference No.: 1915/13921US03 and 13921US04

Dear Mr. Ciesla:

I am counsel for Regeneration Technologies, Inc. ("RTI") the former employer of Kevin C. Carter, now deceased. Kevin C. Carter was a co-inventor on the above-identified patent applications. We have been informed that Kevin C. Carter's wife, Diane Carter, is the Administrator of his estate. I am following up RTI's letter to Diane Carter of January 17, 2002, and to yourself, as counsel for Diane Carter, of February 11, 2002. In those letters, RTI requested that Diane Carter sign the Assignment and Declaration on behalf of Kevin C. Carter, as Administrator of his estate. By virtue of his Employment Agreement, Kevin Carter was under an obligation to assign his rights to the inventions to RTI. Once the patents issue, Kevin's contribution to humanity will be forever documented in the archives of the U.S. Government.

It is our understanding that Diane Carter refuses to sign the documents. We advised the U.S. Patent Office of our efforts, and they denied our petition to proceed without Diane Carter's signature. Therefore, we request that you again ask Diane Carter if she will please sign the enclosed Declaration and Assignment relating to the above identified applications (copies of which are also enclosed for her review). Since time is of the essence, could you

please return the executed documents to us in the enclosed prepaid Federal Express envelope, or advise us of Diane Carter's adverse decision as soon as possible. We need to file our responses with the U.S. Patent Office by August 26, 2002.

Sincerely,

Donald J. Pochopien

:gl
Enclosures
cc: Dennis Tomisaka
Timothy J. Malloy, Esq.
David D. Headrick, Esq.

OIPE JC67
SEP 2 6 2003
PATENT & TRADEMARK OFFICE

RECEIVED
SEP 3 0 2003
OFFICE OF PETITIONS

Law Office of
LARRY E. CIESLA

Elder Law
Estate Planning
Real Estate
Commercial Law
Probate & Guardianship
Disability & Public Benefits

204 W. University Ave., Suite 4
P.O. Box 1161
Gainesville, FL 32602
(352) 378-5603
FAX (352) 375-6249
Email: LCiesla@aol.com

August 21, 2002

VIA FACSIMILE TRANSMISSION (312)775-8100

Donald J. Pochopien, Esquire
McAndrews, Held & Malloy, Ltd.
500 West Madison Street
Chicago, Illinois 60661

Re: Diane Carter/Estate of Kevin C. Carter, Deceased
Your File No.: 1915/13921US03 and 13921US04

Dear Mr. Pochopien:

Receipt of your letter to me dated August 20, 2002 is acknowledged. I have discussed the matter with Diane Carter and she advises that she is unwilling to sign the patent applications at this point. She further wishes to advise that she would be open to negotiations with Regeneration Technologies regarding the number of shares of stock of Regeneration Technologies to which the estate is to receive as a result of Mr. Carter's death.

Very truly yours,

Larry E. Ciesla

LARRY E. CIESLA

LEC:mp

cc: Diane Carter

clients.carter.kev.pochopien.ltr

OIPE JC67
SEP 2 6 2003
PATENT & TRADEMARK OFFICE

RECEIVED
SEP 3 0 2003
OFFICE OF PETITIONS
COPY

EMPLOYMENT AGREEMENT

THIS EMPLOYMENT AGREEMENT (the "Agreement") is made and entered into this 13 day of February, 1998, by and between REGENERATION TECHNOLOGIES, INC., a Florida corporation (the "Corporation") and KEVIN C. CARTER ("Employee").

WHEREAS, the Corporation is engaged in the business of manufacturing products from bone tissue in Alachua, Florida; and

WHEREAS, the Corporation desires to employ Employee and Employee desires to accept such employment during the term of this Agreement and upon the terms and conditions set forth herein,

NOW, THEREFORE, in consideration of the mutual promises and the benefits accruing to the parties hereto, the parties agree as follows:

1. Employment. The Corporation hereby agrees to employ Employee, and Employee hereby agrees to accept such employment, to render services on behalf of the Corporation as Project Engineer. The duties of Employee shall be those established by the Corporation's Board of Directors, or its officers, from time to time.

2. Devotion to Employment. During the term of this Agreement, Employee shall devote his full time on behalf of the Corporation, and Employee shall not engage in any other gainful employment without the written consent of the Corporation. Provided, however, that nothing contained herein shall prohibit Employee from investing or trading in stocks, bonds, commodities or other forms of investment, including real property.

3. Term of Agreement. This Agreement shall be effective as of the date first written above, and it shall continue in full force and effect for a period of five (5) years unless sooner terminated as hereinafter provided.

4. Compensation.

(a) Annual Salary. The Corporation shall pay to Employee as compensation for his services a salary of Forty-Three Thousand Six Hundred Eighty Dollars ($43,680.00) per year, payable in equal monthly installments. Employee's salary shall be reviewed annually by the Corporation's Board of Directors, at which time Employee's salary may be adjusted as mutually agreed upon by Employee and the Corporation's Board of Directors.

(b) Performance Bonus. To provide greater incentive for Employee by rewarding him with additional compensation, a cash bonus may be paid to Employee at any time during the year, or after the close of the year, based upon the performance of the Corporation and the performance of Employee during such year; provided, however, that the payment of any such bonus and the amount thereof shall be within the sole discretion of the Corporation's Board of Directors. In making such determination, the Directors will consider the following:

(i) The net profits of the Corporation for the year;

(ii) The base salary of Employee;

(iii) Employee's overall performance as an employee of the Corporation;

(iv) A comparison of Employee's performance with the performance of the other employees of the Corporation; and

AUG-23-2002 FRI 02:42 PM RTI HR FAX NO. P. 03

(v) Such other matters as may be considered appropriate by the Directors.

(c) Stock of the Corporation. The Corporation shall issue to Employee Ten Thousand (10,000) shares of common stock of the Corporation (the "Shares"). The Shares shall be issued as described herein only upon Employee's execution of a Stock Restriction Agreement for Regeneration Technologies, Inc. (the "Stock Restriction Agreement"), which, inter alia, restricts the transfer of the Shares and contains certain buy-back provisions regarding the Shares upon the termination of Employee's employment with the Corporation.

(d) Withholding, FICA, FUTA. Employee's compensation hereunder shall be subject to, and reduced by, applicable federal income tax withholding and FICA tax, and any other taxes imposed by law.

5. Fringe Benefits. During the term of this Agreement, Employee shall be entitled to all fringe benefits offered generally to the Corporation's full-time managerial employees as established or modified from time to time by the Corporation, subject always to the rules in effect regarding participation in such plans. Employee shall not be entitled to any other fringe benefits as a result of his employment with the Corporation.

6. Business Expenses. Except as otherwise provided herein, the Corporation shall pay, either directly or by reimbursement to Employee, such reasonable and necessary business expenses incurred by Employee in the course of his employment by the Corporation as are consistent with the Corporation's policies in existence from time to time, subject to such dollar limitations and verification and record keeping requirements as may be established from time to time by the Corporation.

AUG-23-2002 FRI 02:42 PM RTI HR FAX NO. P. 04

7. Vacation and Sick Leave. Employee shall be entitled to three (3) weeks paid vacation time each calendar year, prorated in accordance with Corporation policy. All vacations shall be taken by Employee at such time or times as may be approved by the Corporation. There will be no carryover, except as may be allowed by Corporation policy, of unused vacation time from one year to another. Compensation for unused vacation time, if any, shall be in accordance with Corporation policy.

8. Time Off. Employee shall be entitled to such time off with pay for attendance at seminars, courses, meetings and conventions as is authorized by the Corporation from time to time. The specific seminars, courses, meetings and conventions to be attended by Employee shall be subject to the Corporation's prior approval.

9. Termination of Employment.

(a) Voluntary Termination. Employee or the Corporation may voluntarily terminate Employee's employment with the Corporation (and, except as otherwise specifically provided hereunder, this Agreement) at any time, by delivering to the other party written notice of such intention not less than thirty (30) days prior to the effective date of termination. Notwithstanding the foregoing, if notice of termination is given by Employee to the Corporation, then the Corporation shall have the option of advancing the effective date of such termination to any date after receipt of such notice from Employee, which option shall be exercised by the Corporation within three (3) business days of receipt of such notice.

(b) Termination for Cause. The Corporation may immediately terminate Employee's employment with the Corporation (and, except as otherwise specifically provided hereunder, this Agreement) for "cause" by giving written notice (without regard to the

AUG-23-2002 FRI 02:42 PM RTI HR FAX NO. P. 05

thirty (30) day period provided above) of such termination to Employee specifying the grounds therefor. A termination for "cause" shall only be for any one or more of the following reasons:

(i) Willfully or negligently damaging the Corporation's property, business, reputation or goodwill.

(ii) Willfully injuring any employee of the Corporation.

(iii) Willfully injuring any person in the course of the performance of services for the Corporation.

(iv) Lawfully charged with commission of a felony.

(v) Stealing, dishonesty, fraud or embezzlement.

(vi) Deliberate and continuous neglect of duty.

(vii) Continuous failure to properly perform Employee's duties.

(viii) Use of alcohol or narcotics to the extent it prevents, in the sole judgment of the Corporation's Board of Directors, Employee from effectively performing the duties set forth in Paragraph 1 above.

(ix) Violating the covenants set forth in Paragraphs 10 or 11 of this Agreement.

The decision to terminate Employee's employment for "cause" shall be made by the Corporation's Board of Directors in its sole discretion.

(c) Termination Upon Death, Incompetency or Disability. Notwithstanding Subparagraph 9(a) above, the Corporation shall have the right to terminate Employee's employment with the Corporation (and, except as otherwise specifically provided hereunder, this Agreement) immediately and without prior written notice to Employee in the

AUG-23-2002 FRI 02:42 PM RTI HR FAX NO. P. 06

event that Employee dies, or is adjudicated incompetent, or is "permanently disabled", as hereinafter defined. As used herein, the term "permanently disabled" shall mean that Employee is unable to adequately perform his regular duties hereunder as a result of sickness or accident and such condition appears to be permanent. The determination of "permanent disability" shall be made by the Corporation's Board of Directors in its sole and absolute discretion and its decision shall be final and binding on Employee unless found to be arbitrary or capricious by a court of competent jurisdiction.

(d) Performance of Duties During Notice Period. In the event that Employee terminates Employee's employment with the Corporation in accordance with the terms of Subparagraph 9(a), Employee, if requested by the Corporation, shall continue to render services hereunder on behalf of the Corporation for the thirty (30) day period until the effective date of termination, and shall, in such event, be paid the compensation due Employee hereunder for the remainder of such period.

10. Confidential Information. Employee acknowledges and recognizes that, in connection with the performance of his duties and obligations for the Corporation, Employee has and will have access to certain confidential information of the Corporation, including, but not limited to, any intellectual property of the Corporation, the identity of the Corporation's clients, the identity of prospective clients, the existence of negotiations with prospective clients of the Corporation, all drawings, records, sketches, models, financial information, customer information, trade secrets, and trade secrets relating to services of the Corporation, and products being developed by the Corporation (the "Confidential Information"). Employee hereby acknowledges that the maintenance of the confidentiality of the Confidential Information and

AUG-23-2002 FRI 02:43 PM RTI HR FAX NO. P. 07

restrictions on the use of the Confidential Information is essential to the Corporation. Employee shall not, at any time, whether during the term of this Agreement or after the termination of Employee's employment with the Corporation for any reason whatsoever, divulge or reveal any of the Confidential Information to any person, party or entity, directly or indirectly. In addition, Employee shall not utilize any of the Confidential Information for his own benefit, for the benefit of any subsequent employer or competitor of the Corporation. Employee shall maintain the Confidential Information in strict confidence and shall not copy, duplicate or otherwise reproduce, in whole or in part, such Confidential Information, except as necessary for Employee to perform services for the Corporation. Upon the termination of Employee's employment by the Corporation, or at the earlier request of the Corporation, Employee shall immediately surrender to the Corporation any and all memoranda, records, files or other documents and any other materials (including photocopies or other reproductions) containing or relating to the Confidential Information. Employee shall indemnify and hold the Corporation harmless from any loss, damage, expense, cost or liability arising out of any unauthorized use or disclosure of the Confidential Information by Employee. The provisions of this Paragraph 10 shall survive the termination of Employee's employment with the Corporation and the termination of this Agreement.

11. Employee Developments. Employee is aware and understands that, during the term of Employee's employment with the Corporation or with the financial and other assistance that may be provided by the Corporation, Employee may invent, create, develop and improve certain valuable property such as, but not limited to, patents, trademarks, inventions, other patentable inventions and other trade secrets and formula, where such valuable property is

AUG-23-2002 FRI 02:43 PM RTI HR FAX NO. P. 08

(1) created during Employee's normal work hours; (2) created using the equipment or facilities of the Corporation; (3) created by Employee under the supervision or guidance of the Corporation; or (4) within the field of use which includes human or animal allograft tissue ("Employee Developments"). Employee agrees that all Employee Developments that may be developed or produced by Employee during Employee's employment by the Corporation are and will be the property of the Corporation, and that Employee further agrees that he will, at the request of the Corporation, execute such documents as the Corporation may reasonably request from time to time, to assign and transfer all of the right, title and interest in Employee Developments to the Corporation and he will cooperate with the Corporation in connection with any patent applications. In this regard, Employee will, at all times, fully advise and inform the Corporation of all matters that Employee may be developing or working on while employed by the Corporation. Employee further agrees that upon the termination of his employment with the Corporation for any reason whatsoever, he shall immediately deliver and surrender to the Corporation any and all plans, documents and other materials of any nature relating to Employee Developments. The Corporation may provide additional compensation to Employee as consideration for Employee Developments in accordance with any patent policy of the Corporation. The provisions of this Paragraph 11 shall survive the termination of this Agreement.

12. Limitation of Employment.

(a) In the event of the termination of Employee's employment with the Corporation either by the Corporation for cause (as defined in Subparagraph 9(b) above) or voluntarily by Employee, Employee agrees that for a period of two (2) years following the

AUG-23-2002 FRI 02:43 PM RTI HR FAX NO. P. 09

effective date of such termination, he will not engage in the business of manufacturing or distribution of products from bone tissue (or in any business that competes with Corporation) within the Southeastern United States. In the event of the termination of Employee's employment with the Corporation by the Corporation without cause, Employee agrees that for a period of one (1) year following the effective date of such termination, he will not engage in the business of manufacturing or distribution of products from bone tissue (or in any business that competes with such business) within the Southeastern United States. For the purposes of this Agreement, the "Southeastern United States" shall include the following states: Florida, Georgia, Alabama, Mississippi, South Carolina, North Carolina, Kentucky, Tennessee and Virginia.

(b) Employee acknowledges that this restrictive covenant is reasonably necessary to protect the Corporation's legitimate business interests, which are represented by, among other things, the substantial relationships between the Corporation and its licensees and tissue sources, as well as the goodwill established by the Corporation with licensees and tissue sources in the United States and other countries where the Corporation's products are manufactured or distributed over a protracted period.

(c) Employee recognizes the fact that the Corporation would not sign this Agreement without the inclusion of this covenant, and Employee confirms the sufficiency of the consideration received by him, in the form of employment by the Corporation, in accepting this covenant as a material term of the Agreement.

(d) The parties acknowledge and agree that no amount of money would adequately compensate the Corporation for damages which the parties acknowledge would be suffered as a result of the violation of the terms of this provision by Employee, and

AUG-23-2002 FRI 02:43 PM RTI HR FAX NO. P. 10

they confirm that any such violation would result in irreparable injury to the Corporation because of the reduction in its income caused by the loss of or damage to the aforesaid relationships. It is agreed that the Corporation will be entitled to specific performance of this provision, and to injunctive relief, in view of the fact that the actual harm is not readily ascertainable or compensable by money damages.

(e) The period set forth in subparagraph (a) above will be tolled during any time in which Employee is in violation of the restrictive covenant contained in this Paragraph 12, and that period will begin to run again from the date Employee ceases such violation.

(f) This Paragraph 12 will survive the termination of this Agreement and the termination of Employee's employment with the Corporation.

(g) Notwithstanding anything contained in this Paragraph 12 to the contrary, Employee may be employed by University of Florida Tissue Bank, Inc. following any termination of his employment with RTI.

13. Remedies For Breach. It is understood and agreed by the parties that no amount of money would adequately compensate the Corporation for damages which the parties acknowledge would be suffered as a result of a violation by the Employee of the covenants contained in Paragraphs 11 and 12 above, and that, therefore, the Corporation shall be entitled, upon application to a court of competent jurisdiction, to obtain injunctive relief to enforce the provisions of Paragraphs 11 and 12, which injunctive relief shall be in addition to any other rights or remedies available to the Corporation. If such a violation occurs, Employee shall be responsible for the payment of reasonable attorney's fees and other costs and expenses incurred by the Corporation in enforcing the covenants contained in Paragraphs 11 and 12 above, whether

AUG-23-2002 FRI 02:43 PM RTI HR FAX NO. P. 11

incurred at the trial level or in any appellate proceeding. The provisions of this Paragraph 13 shall survive the termination of this Agreement.

14. Limitations on Authority. Without the express written consent of the Corporation's Board of Directors, Employee shall have no authority to do any of the following:

(a) Pledge the credit of the Corporation or any of its other employees;

(b) Bind the Corporation under any contract, agreement, note, mortgage or other obligation, except as provided in the Corporation's Standard Operating Procedures;

(c) Release or discharge any debt due the Corporation unless the Corporation has received the full amount thereof; or

(d) Sell, mortgage, transfer or otherwise dispose of any assets of the Corporation.

15. Severability. If any provision of this Agreement shall be declared invalid or unenforceable by a court of competent jurisdiction, the invalidity or unenforceability of such provision shall not affect the other provisions hereof, and this Agreement shall be construed and enforced in all respects as if such invalid or unenforceable provision was omitted.

16. Attorney's Fees and Costs. Except as provided in Paragraph 13 above, in the event a dispute arises between the parties hereto and suit is instituted, the prevailing party in such litigation shall be entitled to recover reasonable attorney's fees and other costs and expenses from the nonprevailing party, whether incurred at the trial level or in any appellate proceeding.

17. Governing Law; Venue. This Agreement shall be governed by and construed in accordance with the laws of the State of Florida, and venue for any legal proceeding

or action at law arising out of or construing this Agreement shall lie in the state courts of Alachua County, Florida, or the United States District Court for the Northern District of Florida, Gainesville Division.

18. Completeness of Agreement. All understandings and agreements heretofore made between the parties hereto with respect to the subject matter of this Agreement are merged into this document which alone fully and completely expresses their agreement. No change or modification may be made to this Agreement except by instrument in writing duly executed by the parties hereto with the same formalities as this document.

19. Notices. Any and all notices or other communications provided for herein shall be given in writing and shall be hand delivered or sent by United States mail, postage prepaid, registered or certified, return receipt requested, addressed as follows:

If to the Corporation:

Regeneration Technologies, Inc.
One Innovation Drive
Alachua, Florida 32615
Attn: President

If to Employee:

Kevin C. Carter
8502 NW 35 Road
Gainesville, Florida 32606

provided, however, that any party may, from time to time, give notice to the other party of some other address to which notices or other communications to such party shall be sent, in which event, notices or other communications to such party shall be sent to such address. Any notice or other communication shall be deemed to have been given and received hereunder as of the date

the same is actually hand delivered or, if mailed, when deposited in the United States mail, postage prepaid, registered or certified, return receipt requested.

20. Assignment. Neither party to this Agreement may assign its rights or obligations hereunder without the prior written consent of the other party.

21. Binding Effect. This Agreement shall be binding upon and inure to the benefit of the respective parties hereto, their heirs, legal representatives, successors and permitted assigns.

22. Counterparts. This Agreement may be executed in several counterparts, each of which shall be deemed an original, and all of which shall constitute but one and the same instrument.

23. Captions. The captions appearing in this Agreement are inserted only as a matter of convenience and in no way define, limit, construe or describe the scope or intent of any provisions of this Agreement or in any way affect this Agreement.

24. Employee Handbook. Employee agrees to follow and be bound by the guidelines contained in the Corporation's Employee Handbook, as same may be modified from time to time.

(Signatures on following page)

AUG-23-2002 FRI 02:44 PM RTI HR FAX NO. P. 14

IN WITNESS WHEREOF, the undersigned have executed this Agreement on the date and year set forth above.

WITNESSES:

"CORPORATION"

Regeneration Technologies, Inc.

By: James M. Grooms, President

"EMPLOYEE"

Kevin C. Carter

rti.contract.carter

AUG-23-2002 FRI 02:44 PM RTI HR FAX NO. P. 15

OIPE JC67
SEP 2 6 2003
PATENT & TRADEMARK OFFICE

ATTORNEY DOCKET NO. RTI 112R IB /1915-13980US04

IN THE UNITED STATES
PATENT AND TRADEMARK OFFICE

In the Application of:
Bianchi, John R., *et al.*

Serial No.: 10/387,322

Filed: December 23, 2002

For: "Assembled Implant"

Group Art Unit:

CERTIFICATE OF MAILING

I hereby certify that this paper (and all papers referred to herein) is being deposited with the United States Postal Service as first class mail, postage prepaid, in an envelope addressed to: Mail Stop Petition, Commissioner for Patents, P.O. Box 1450, Alexandria, VA 22313-1450 on:

September 24, 2003

Donald J. Pochopien
Registration No. 32,167
Attorney for Applicants

DECLARATION OF ATTORNEY DONALD J. POCHOPIEN
SUPPORTING
REQUEST FOR RECONSIDERATION OF PETITION UNDER 37 C.F.R. § 1.47(a)

Mail Stop Petition
Commissioner for Patents
P.O. Box 1450
Alexandria, VA 22313-1450

Sir:

I, Donald J. Pochopien, hereby declare as follows:

1. I am an attorney registered to practice before the U.S. Patent and Trademark Office (Reg. No. 32,167). I am making this declaration to show facts in support of the **PETITION UNDER 37 C.F.R. § 1.47(a)**, filed concurrently herewith, requesting that the Director accept the enclosed Declaration and Power of Attorney for the above identified application ("the Declaration").

2. I have been retained by Regeneration Technologies Inc. ("RTI"), the real party of interest in this case, to continue with the prosecution of this application. Upon information and belief, the present application properly names eleven joint inventors, namely, John R. Bianchi; C. Randall Mills; P.J. Gorham; Michael Esch; Kevin C. Carter, deceased; Pat Coleman; Kevin Ross; Harry W. Rambo; Darren G. Jones; Dayna Bushkirk; and Russell S. Donda. Upon information and belief, each of the coinventors was obligated by virtue of their employment agreement to execute all documents related to their inventions and to assign all inventions to RTI.

3. I have reviewed the prosecution and the correspondence in this application and determined that Diane Carter is the Administrator of the estate of the deceased co-inventor, Kevin C. Carter. Based upon information and belief, and documents already of record, Diane Carter has previously refused to execute the Declaration and the assignment for the above-identified patent application and for other patent applications in which her husband, the deceased Kevin C. Carter, was a co-inventor.

4. Based upon a review of the correspondence in this application, I determined that Diane Carter, the legal representative of the estate of Kevin C. Carter, is herself represented by counsel, Larry Ciesla, Esq. of Gainesville FL. Specifically, on August 20, 2002, I telephoned Larry Ciesla, Esq., in Gainesville FL to discuss another patent application (USSN 09/924,110 for which a petition under Rule 1.47(a) was granted by the USPTO) and his client, Diane Carter. Larry Ciesla advised me that he is counsel for Diane Carter and that Diane Carter is the sole administrator of the estate of her late husband, Kevin C. Carter.

5. In the telephone conference referenced in ¶ 4 above, I asked Larry Ciesla if he knew why Diane Carter refused to sign the Declaration for another patent

application (USSN 09/924,110) as legal representative for her deceased husband, Kevin C. Carter.

6. In response to the question recited in Paragraph 5 *supra*, Larry Ciesla told me that Diane Carter would not sign because she was dissatisfied to discover that at the time of his death, Kevin C. Carter was only 50% vested in his stock options at RTI. He also advised me that Diane Carter is the beneficiary of Kevin C. Carter's 50% vested interest in certain options of RTI stock. According to attorney Ciesla, Diane Carter requested from RTI that she be given a 100% vested interest in all of the RTI stock options which were granted to Kevin C. Carter, because she is a widow and needs the money, but that RTI refused. According to Attorney Larry Ciesla, because RTI would not grant Diane Carter 100% vesting in her deceased husband's stock options, "she was not going to do anything for RTI," such as read the patent specifications and if appropriate, sign the corresponding declarations.

7. Based upon information and belief, Kevin C. Carter was not entitled to more than 50% vested interest in his RTI stock options at the time of his death. Based upon information and belief, Diane Carter, as legal representative for the estate of Kevin C. Carter, is not entitled to any additional shares of RTI stock other than the shares represented by the 50% vested interest in the total stock options granted to Kevin C. Carter.

8. In my conversation of August 20, 2002 with Larry Ciesla, I advised him that I would be sending him a letter by Federal Express that included another packet of documents containing the following: 1) two patent applications (USSN 09/924,110 and USSN 10/013,328), wherein Kevin C. Carter was a coinventor, for review by his client, Diane Carter, as Kevin Carter's legal representative, and 2) the corresponding declarations and assignments for her execution. I asked Larry Ciesla if he would present the packet to

his client with my letter and advise her that we are again requesting that she review the patent applications, and if acceptable, sign the declarations as legal representative of the estate of her deceased husband, Kevin C. Carter. He said that he would do so and that he would advise me of Diane Carter's decision. A copy of my letter of instruction to Larry Ciesla, dated August 20, 2002, enclosing the two patent applications, Declarations and Assignments is attached hereto as Exhibit A. The letter was sent both via facsimile and via Federal Express next day delivery (with all enclosures).

9. Two days later, on August 22, 2002, I received a facsimile reply, dated August 21, 2002, from Larry Ciesla to my letter of August 20, 2002. A copy of Larry Ciesla's letter to me dated August 21, 2002 is attached hereto as Exhibit B. In Ciesla's letter to me of August 21, 2002, he advises that "he discussed the matter with Diane Carter" and that "she is **unwilling to sign** the [declarations for the] patent applications **at this point**" in her official capacity as Administrator of the estate of Kevin C. Carter. [Exhibit B: Ciesla letter of 08/21/02.] By the phrase "at this point", Larry Ciesla means to convey that Diane Carter would be willing to sign at some other point (if RTI were willing to grant her greater vesting in Kevin C. Carter's stock options).

10. As to when the other point in time might occur when Diane Carter's unwillingness to review the specifications and sign the appropriate declarations as administrator of Kevin C. Carter's estate would dissipate, Attorney Ciesla advises us that when Diane Carter is provided with **financial** incentive for doing so, such as negotiating "the **number of shares of stock of Regeneration Technologies** to which the estate is to receive as a result of Mr. Carter's death":

> . . . she [Diane Carter] is **unwilling** to sign the patent applications **at this point**. She further wishes to advise that she would be **open to negotiations** with Regeneration Technologies regarding the **number of shares of stock of Regeneration Technologies** to which the **estate is to receive** as a result of Mr. Carter's death.

[Exhibit B: Ciesla letter of 08/21/02; emphasis added in bold.]

11. On information and belief, Diane Carter refused to review the specification of parent application USSN 09/941,154 of this continuation application or to sign the corresponding declaration without receiving additional compensation, as was expressly admitted in relation to the other Kevin C. Carter applications (USSNs 09/924,110 and 10/013,328).

12. On December 17, 2002 in relation to the present application (USSN 09/941,154), the undersigned attorney sent a letter dated December 17, 2002, to Larry Ciesla, attorney for Diane Carter, the Administrator of the estate of the deceased coinventor, Kevin C. Carter, (hereinafter Petitioners' letter and Exhibit C hereto). The Petitioners' letter was sent to attorney Ciesla, via Federal Express, and receipt was confirmed. With the Petitioners' letter, the Petitioners enclosed a copy of the above-identified patent application, complete with claims and drawings, and a copy of the declaration for execution by Diane Carter. In the Petitioners' letter, the Petitioners even offered to pay Mr. Ciesla's attorney's fees for his time in presenting the documents and obtaining his client's signature on the declaration and returning it to us. This was to preclude Mr. Ciesla's client, Diane Carter, from refusing to sign because it would cost her money to get her lawyer involved. However, the undersigned attorney never received a response to the Petitioner's letter. Thus, on information and belief, Diane Carter refused to review the parent application (USSN 09/941,154) of the above-identified application (USSN 10/387,322) or to sign the corresponding declaration without receiving **financial** compensation for doing so.

13. Based upon information and belief, including Kevin C. Carter's Employment Agreement with RTI dated 02/13/98 ("Employment Agreement"), any rights that Kevin C. Carter had in the above-identified patent application were under an obligation to be assigned to RTI as a basis for Kevin C. Carter's continued employment

and that Kevin C. Carter had a continuing obligation "**at the request of the Corporation**" to **execute documents** and to "**cooperate with the Corporation in connection with any patent applications**":

> Employee agrees that **all Employee Developments** that may be developed or produced by Employee during Employee's employment by the Corporation [*i.e.,* RTI] **are** and **will be** the **property of the Corporation**, and that Employee further agrees that he will, at the **request** of the Corporation, **execute such documents** as the Corporation may reasonably request from time to time, to assign and transfer the right, title and interest in Employee Developments to the Corporation and **he will cooperate with the Corporation in connection with any patent applications**.
>
> [Exhibit D: Employment Agreement at page 8; emphasis added in bold.]

14. The ten cooperative coinventors, namely John R. Bianchi; C. Randall Mills; P.J. Gorham; Michael Esch; Pat Coleman; Kevin Ross; Harry W. Rambo; Darren G. Jones; Dayna Bushkirk; and Russell S. Donda, have executed an Assignment of their entire right, title and interest in the parent application of the above identified continuation application to Regeneration Technologies Inc; they have also executed the cofiled Declaration **on their own behalf and on the behalf of Diane Carter, legal representative for the estate of the deceased coinventor, Kevin C. Carter**.

15. Based upon the forgoing facts and the law, it is believed that the Petitioner has made a prima facie case for the Director to accept the Declaration filed herewith, which names the deceased coinventor (Kevin C. Carter) and the legal representative of his estate (Diane Carter) who is unwilling to sign on his behalf, but which Declaration has been signed by each of the remaining named coinventors, John R. Bianchi; C. Randall Mills; P.J. Gorham; Michael Esch; Pat Coleman; Kevin Ross; Harry W. Rambo; Darren G. Jones; Dayna Bushkirk; and Russell S. Donda, on their own behalf

and on behalf of Diane Carter, the legal representative of the estate of Kevin C. Carter, deceased.

16. I hereby declare that all statements made herein of my own knowledge are true and that all statements made on information and belief are believed to be true; and further that these statements were made with the knowledge that willful false statements and the like so made are punishable by fine or imprisonment, or both, under 18 U.S.C. § 1001 and that such willful false statements may jeopardize the validity of the application or any patent issued thereon.

Donald J. Pochopien,
Attorney for Petitioners
Reg. No. 32,167

Date: September 24, 2003

J:\open\djp\RTI\USPTO\ 13980US04\13980US04 Dec DJP for Pet under Rule 1.47(a).doc

OIPE JC67
SEP 2 6 2003
PATENT & TRADEMARK OFFICE

RECEIVED
SEP 3 0 2003
OFFICE OF PETITIONS

LAW OFFICES
McANDREWS, HELD & MALLOY, LTD.
34TH FLOOR
500 WEST MADISON STREET
CHICAGO, ILLINOIS 60661
TELEPHONE: (312) 775-8000
FACSIMILE: (312) 775-8100
WWW.MHMLAW.COM

GEORGE P. MCANDREWS
JOHN J. HELD
TIMOTHY J. MALLOY
WILLIAM M. WESLEY
LAWRENCE M. JARVIS
GREGORY J. VOGLER
JEAN DUDEK KUELPER
HERBERT D. HART III
ROBERT W. FIESELER
THOMAS J. WIMBISCUS
STEVEN J. HAMPTON
PRISCILLA F. GALLAGHER
STEPHEN F. SHERRY
PATRICK J. ARNOLD JR.
GEORGE F. WHEELER
JANET M. MCNICHOLAS
RONALD E. LARSON
CHRISTOPHER C. WINSLADE
EDWARD A. MAS II
GREGORY C. SCHODDE
EDWARD W. REMUS
DONALD J. POCHOPIEN
SHARON A. HWANG
DAVID D. HEADRICK
DEAN D. SMALL
ALEJANDRO MENCHACA
KIRK A. VANDER LEEST
RICHARD T. MCCAULLEY JR.
MELISSA M. MCCAULLEY
ANTHONY E. DOWELL
PETER J. MCANDREWS
LELAND G. HANSEN
JAMES M. HAFERTEPE
JONATHAN R. SICK
ELIGIO C. PIMENTEL
JAMES P. MURPHY
DEAN A. PELLETIER
MICHAEL B. HARLIN
GEOFFREY A. BAKER
JAMES R. NUTTALL
ROBERT A. SURRETTE
TIMOTHY L. HARNEY
JOSEPH M. BARICH
SCOTT P. MCBRIDE
PATRICIA J. MCGRATH
WILHELM L. RAO
SANDRA A. FRANTZEN
RONALD H. SPUHLER
CHRISTOPHER V. CARANI
RONALD A. DICERBO
JENNIFER E. LACROIX
JOSEPH F. HARDING
JOSEPH M. BUTSCHER
TROY A. GROETKEN
GERALD C. WILLIS
SARA J. BARTOS
JOHN A. WIBERG
JOHN L. ABRAMIC
MICHAEL J. FITZPATRICK
DAVID Z. PETTY
GENE W. LEE
MICHAEL T. CRUZ

OF COUNSEL
S. JACK SAUER

August 20, 2002

VIA FACSIMILE *AND* FEDERAL EXPRESS

Larry Ciesla, Esq.
204 West University Avenue
Suite #4
Gainesville, Florida 32601

Re: Signature by Diane Carter,
Administrator Of Kevin C. Carter's Estate
1) U.S. Patent Application No. 09/924,110
2) U.S. Patent Application No. 10/013,328
Our Reference No.: 1915/13921US03 and 13921US04

Dear Mr. Ciesla:

I am counsel for Regeneration Technologies, Inc. ("RTI") the former employer of Kevin C. Carter, now deceased. Kevin C. Carter was a co-inventor on the above-identified patent applications. We have been informed that Kevin C. Carter's wife, Diane Carter, is the Administrator of his estate. I am following up RTI's letter to Diane Carter of January 17, 2002, and to yourself, as counsel for Diane Carter, of February 11, 2002. In those letters, RTI requested that Diane Carter sign the Assignment and Declaration on behalf of Kevin C. Carter, as Administrator of his estate. By virtue of his Employment Agreement, Kevin Carter was under an obligation to assign his rights to the inventions to RTI. Once the patents issue, Kevin's contribution to humanity will be forever documented in the archives of the U.S. Government.

It is our understanding that Diane Carter refuses to sign the documents. We advised the U.S. Patent Office of our efforts, and they denied our petition to proceed without Diane Carter's signature. Therefore, we request that you again ask Diane Carter if she will please sign the enclosed Declaration and Assignment relating to the above identified applications (copies of which are also enclosed for her review). Since time is of the essence, could you

please return the executed documents to us in the enclosed prepaid Federal Express envelope, or advise us of Diane Carter's adverse decision as soon as possible. We need to file our responses with the U.S. Patent Office by August 26, 2002.

Sincerely,

Donald J. Pochopien

:gl
Enclosures
cc: Dennis Tomisaka
Timothy J. Malloy, Esq.
David D. Headrick, Esq.

UNITED STATES PATENT AND TRADEMARK OFFICE

FEB 09 2005

Commissioner for Patents
United States Patent and Trademark Office
P.O. Box 1450
Alexandria, VA 22313-1450
www.uspto.gov

Smyrski Law Group, A Professional Corporation
3310 Airport Avenue
Santa Monica, CA 90405

In re Application of	:	DECISION ON PETITION
Kenneth E. Kadziauskas et al	:	TO MAKE SPECIAL
Serial No. : 10/387,327	:	(ACCELERATED EXAMINATION)
Filed : March 12, 2003	:	
For : System and Method for Pulsed Ultrasonic Power Delivery Employing Cavitation Effects	:	

This is a decision on the petition filed February 20, 2004 to make the above-identified application special. The petition requests that the above-identified application be made special on the basis of special examining procedure for certain new applications – accelerated examination as set forth in MPEP § 708.02, item VIII.

The requirement for granting special status under this section are: (A) a petition to make special accompanied by the fee set forth in 37 CFR 1.17(h); (B) all claims being directed to a single invention, or an election without traverse if the Office determines that all claims are not directed to a single invention; (C) a statement that a pre-examination search was made listing the field of search; (D) one copy of each of the references deemed most closely related to the subject matter encompassed by the claims if said references are not already of record ; and (e) a detailed discussion of how the claimed subject matter is patentable over the references.

Since all of the requirements for special status under MPEP § 708.02 VIII have been met, the petition is **GRANTED**.

Petitioner is advised that this application will continue to be special, throughout its entire prosecution and pendency, including interference and appeal, if any, only if petitioner makes a prompt *bona fide* effort, in response to each Office action, to place the application in condition for allowance, even if it is necessary to conduct an interview with the examiner to accomplish this purpose.

Esther M Kepplinger

Esther M. Kepplinger, Director
Technology Center 3700
Phone: (571) 272-2975

ak/1/28/05

UNITED STATES PATENT AND TRADEMARK OFFICE

Commissioner for Patents
United States Patent and Trademark Office
P.O. Box 1450
Alexandria, VA 22313-1450
www.uspto.gov

HUNTON & WILLIAMS LLP/RAMBUS INC.
INTELLECTUAL PROPERTY DEPARTMENT
1900 K STREET, N.W.
SUITE 1200
WASHINGTON DC 20006-1109

COPY MAILED

JAN 3 1 2005

OFFICE OF PETITIONS

In re Application of	:	
Donald C. Stark	:	
Application No. 10/387,356	:	ON PETITION
Filed: March 11, 2003	:	
Attorney Docket No. 57941.000056	:	

This is a decision on the petition, filed January 21, 2005, under 37 CFR 1.313(c)(2) to withdraw the above-identified application from issue after payment of the issue fee.

The petition is **GRANTED**.

The above-identified application is withdrawn from issue for consideration of a submission under 37 CFR 1.114 (request for continued examination). See 37 CFR 1.313(c)(2).

Petitioner is advised that the issue fee paid on January 14, 2005 in the above-identified application cannot be refunded. If, however, the above-identified application is again allowed, petitioner may request that it be applied towards the issue fee required by the new Notice of Allowance.[1]

Telephone inquiries should be directed to the undersigned at (571) 272-3208.

The examiner of Technology Center AU 2818 will consider the request for continued examination under 37 CFR 1.114.

Karen Creasy

Karen Creasy
Petitions Examiner
Office of Petitions
Office of the Deputy Commissioner
for Patent Examination Policy

---

[1] The request to apply the issue fee to the new Notice may be satisfied by completing and returning the new Issue Fee Transmittal Form PTOL-85(b), which includes the following language thereon: "Commissioner for Patents is requested to apply the Issue Fee and Publication Fee (if any) or re-apply any previously paid issue fee to the application identified above." Petitioner is advised that, whether a fee is indicated as being due or not, the Issue Fee Transmittal Form **must** be completed and timely submitted to avoid abandonment. Note the language in bold text on the first page of the Notice of Allowance and Fee(s) Due (PTOL-85).

UNITED STATES PATENT AND TRADEMARK OFFICE

COMMISSIONER FOR PATENTS
UNITED STATES PATENT AND TRADEMARK OFFICE
P.O. BOX 1450
ALEXANDRIA, VA 22313-1450
www.uspto.gov

Knobbe, Martens, Olson & Bear LLP
2040 Main Street
Fourteenth Floor
Irvine, CA 92614

MAIL

JUN 2 0 2005

DIRECTOR OFFICE
TECHNOLOGY CENTER 2100

In re Application of: Kurtz, et al.
Application No. 10/387,358
Filed: March 10, 2003
For: SYSTEM AND METHOD FOR NETWORK VULNERABILITY DETECTION AND REPORTING

DECISION ON PETITION TO MAKE SPECIAL UNDER M.P.E.P.§708.02(II): INFRINGEMENT

This is a decision on the petition, filed April 28, 2005, under 37 C.F.R. 1.102(d) and M.P.E.P. §708.02(II): Infringement, to make the above-identified application special.

A grantable petition under 37 C.F.R. 1.102(d), and M.P.E.P. §708.02, Section II, must be accompanied by payment of the fee under 37 C.F.R. 1.17(h) and a statement under 37 C.F.R. 1.102 by the applicant or assignee or statements by an attorney/agent registered to practice before the Patent and Trademark Office that: (A) there is an infringing device or product actually on the market or method in use; (B) a rigid comparison of the alleged infringing device, product, or method with the claims of the application has been made, and that, in his or her opinion, some of the claims are unquestionably infringed; and (C) he or she has made or caused to be made a careful and thorough search of the prior art or has a good knowledge of the pertinent prior art. Applicant must provide one copy of each of the references deemed most closely related to the subject matter encompassed by the claims.

The petition filed April 28, 2005 includes all of the requirements set forth above and, therefore, the petition is **GRANTED**.

The application is being forwarded to the examiner to be advanced out of turn for examination in accordance with the procedures set forth in M.P.E.P. §708.02 and 37 C.F.R. 1.102.

Brian L. Johnson 6/10/05
Special Programs Examiner
Technology Center 2100
Computer Architecture, Software, and Information Security
(571) 272-3595

UNITED STATES PATENT AND TRADEMARK OFFICE

UNITED STATES DEPARTMENT OF COMMERCE
United States Patent and Trademark Office
Address: COMMISSIONER FOR PATENTS
P.O. Box 1450
Alexandria, Virginia 22313-1450
www.uspto.gov

Zilka-Kotab, PC
P.O. BOX 721120
SAN JOSE, CA 95172-1120

Mail Date: 06/18/2010

Applicant	: George R. Kurtz	: DECISION ON REQUEST FOR
Patent Number	: 7664845	: RECALCULATION of PATENT
Issue Date	: 02/16/2010	: TERM ADJUSTMENT IN VIEW
Application No	: 10/387,358	: OF WYETH AND NOTICE OF INTENT TO
Filed	: 03/10/2003	: ISSUE CERTIFICATE OF CORRECTION
		:

The Request for Recalculation is **GRANTED** to the extent indicated.

The patent term adjustment has been determined to be **1336** days. The USPTO will *sua sponte* issue a certificate of correction reflecting the amount of PTA days determined by the recalculation.

Prior to the issuance of the certificate of correction, the USPTO will afford patentee an opportunity to be heard and request reconsideration. Accordingly, patentee has **one month or thirty (30) days**, whichever is longer, to file a request for reconsideration of this patent term adjustment calculation. See 35 U.S.C. 154(b)(3)(B)(ii) and 37 CFR 1.322(a)(4). No extensions of time will be granted under 37 CFR 1.136.

Patentee should use document code PET.OP if electronically filing a request for reconsideration of this patent term adjustment calculation. The patentee must also include the information required by 37 CFR 1.705(b)(2) and the fee required by 37 CFR 1.18(e). If patentee does not file a timely request for reconsideration of this patent term adjustment calculation including the information required by 37 CFR 1.705(b)(2) and the fee required by 37 CFR 1.18(e), the USPTO will issue a certificate of correction reflecting the PTA determination noted above.

Patentee should be aware that in order to preserve the right to review in the United States District Court for the District of Columbia of the USPTO patent term adjustment determination, patentee must ensure that he or she also take the steps required under 35 U.S.C. 154(b)(4)(A) in a timely manner. Nothing in the request for recalculation should be construed as providing an alternative time frame for commencing a civil action under 35 U.S.C. 154(b)(4)(A).

Any questions concerning this decision should be directed to the Office of Patent Legal Administration at 571-272-7702.

UNITED STATES PATENT AND TRADEMARK OFFICE

Commissioner for Patents
United States Patent and Trademark Office
P.O. Box 1450
Alexandria, VA 22313-1450
www.uspto.gov

ROBERT DEBERARDINE
ABBOTT LABORATORIES
100 ABBOTT PARK ROAD
DEPT. 377/AP6A
ABBOTT PARK, IL 60064-6008

COPY MAILED
OCT 16 2006
OFFICE OF PETITIONS

In re Application of Michael E. Landry et al Application No. 10/387,363 Filed: March 11, 2003 Attorney Docket No. 5259-05400	DECISION GRANTING PETITION UNDER 37 CFR 1.137(b)

This is a decision on the petition under 37 CFR 1.137(b), filed January 26, 2006, to revive the above-identified application.

The petition is **GRANTED**.

The above-identified application became abandoned for failure to reply in a timely manner to the non-final Office action mailed May 13, 2005, which set a shortened statutory period for reply of three (3) months. No extensions of time under the provisions of 37 CFR 1.136(a) were obtained. Accordingly, the above-identified application became abandoned on August 16, 2005 (August 14, 2005, the due date, is a Sunday).

The petition satisfies the conditions for revival pursuant to the provisions of 37 CFR 1.137(b) in that (1) the reply (amendment), (2) the $1,500 petition fee, and (3) the required statement of unintentional delay have been received. Accordingly, the reply to the non-final Office action of May 13, 2005 is accepted as having been unintentionally delayed.

Telephone inquiries concerning this decision should be directed to the undersigned at (571) 272-3218.

This matter is being referred to Technology Center AU 3733 for appropriate action in the normal course of business on the reply received January 26, 2006.

Frances Hicks
Petitions Examiner
Office of Petitions

SPE RESPONSE FOR CERTIFICATE OF CORRECTION

Paper No.: _____

DATE : 3/15/06

TO SPE OF : ART UNIT 2871

SUBJECT : Request for Certificate of Correction for Appl. No.: 10387377 Patent No.: 6922229

Please respond to this request for a certificate of correction within 7 days.

Please review the requested changes/corrections as shown in the **COCIN** document(s) in the IFW application image. No new matter should be introduced, nor should the scope or meaning of the claims be changed.

Please complete the response (see below) and forward the completed response to scanning using document code **COCX**.

Valerie Jackson
Certificates of Correction Branch
703-308-9390 ext. 114

Thank You For Your Assistance

The request for issuing the above-identified correction(s) is hereby:
Note your decision on the appropriate box.

- ☑ **Approved** — All changes apply.
- ☐ **Approved in Part** — Specify below which changes **do not** apply.
- ☐ **Denied** — State the reasons for denial below.

Comments: _____

SPE

2871
Art Unit

UNITED STATES PATENT AND TRADEMARK OFFICE

COMMISSIONER FOR PATENTS
UNITED STATES PATENT AND TRADEMARK OFFICE
P.O. BOX 1450
ALEXANDRIA, VA 22313-1450
www.uspto.gov

MATTINGLY, STANGER, MALUR & BRUNDIDGE, P.C.
1800 DIAGONAL ROAD
SUITE 370
ALEXANDRIA, VA 22314

MAILED

JAN 11 2006

TECHNOLOGY CENTER 2100

In re Application of YASUDA et al Application No.: 10/387,382 Filing Date: March 14, 2003 For: SYSTEM AND METHOD FOR VIRTUALIZING NETWORK STORAGES INTO A SINGLE FILE SYSTEM VIEW	:	DECISION ON PETITION FOR ACCELERATED EXAMINATION UNDER M.P.E.P. §708.02(VIII)

This is a decision on the petition filed December 9, 2005 under 37 CFR §1.102(d) and M.P.E.P. §708.02(VIII): Accelerated Examination, to make the above-identified application special.

The petition is **DISMISSED**.

M.P.E.P. §708.02, Section VIII, which sets out the prerequisites for a grantable petition for Accelerated Examination under 37 CFR §1.102(d), states in relevant part:

> A new application (one which has not received any examination by the examiner) may be granted special status provided that applicant (and this term includes applicant's attorney or agent) complies with each of the following items:
>
> (A) Submits a petition to make special accompanied by the fee set forth in 37 CFR 1.17(h);
>
> (B) Presents all claims directed to a single invention, or if the Office determines that all the claims presented are not obviously directed to a single invention, will make an election without traverse as a prerequisite to the grant of special status. The election may be made by applicant at the time of filing the petition for special status. Should applicant fail to include an election with the original papers or petition and the Office determines that a requirement should be made, the established telephone restriction practice will be followed. If otherwise proper, examination on the merits will proceed on claims drawn to the elected invention. If applicant refuses to make an election without traverse, the application will not be further examined at that time. The petition will be denied on the ground that the claims are not directed to a single invention, and the application will await action in its regular turn. Divisional applications directed to the nonelected inventions will not automatically be given special status based on papers filed with the petition in the parent application. Each such application must meet on its own all requirements for the new special status;

(C) Submits a statement(s) that a pre-examination search was made, listing the field of search by class and subclass, publication, Chemical Abstracts, foreign patents, etc. >The pre-examination search must be directed to the invention as claimed in the application for which special status is requested.< A search made by a foreign patent office satisfies this requirement >if the claims in the corresponding foreign application are of the same or similar scope to the claims in the U.S. application for which special status is requested<;

(D) Submits one copy each of the references deemed most closely related to the subject matter encompassed by the claims if said references are not already of record; and

(E) Submits a detailed discussion of the references, which discussion points out, with the particularity required by 37 CFR 1.111 (b) and (c), how the claimed subject matter is patentable over the references.

With respect to requirement (E), the petition does not contain a detailed discussion of the references to the extent required by 37 CFR 1.111(b) and (c). Note that the discussion must particularly point out how the claimed subject matter is patentable over the references. In the present case, for each cited reference, the petition states that essentially all of the limitations of the independent claims are not taught or suggested. However, a statement that the entirety of an independent claim is not disclosed by the prior art does not provide a sufficient distinction between the claimed invention and each of the cited references. Furthermore, it would be difficult to conclude that the pre-examination search was directed to the claimed invention if essentially none of the claim limitations were found in the "most closely related" prior art.

Because the petition fails to satisfy all of the criteria set forth above, the petition to make special is **DISMISSED**.

Any request for reconsideration must be filed within TWO (2) MONTHS from the mailing date of this decision.

The application will remain in the status of a new application awaiting action in its regular turn.

Pinchus M. Laufer
Special Programs Examiner
Technology Center 2100
Computer Architecture, Software, and Information Security
571-272-3599

UNITED STATES PATENT AND TRADEMARK OFFICE

Commissioner for Patents
United States Patent and Trademark Office
P.O. Box 1450
Alexandria, VA 22313-1450
www.uspto.gov

MAILED

SEP 05 2006

Technology Center 2100

MATTINGLY, STANGER, MALUR & BRUNDIDGE, P.C.
1800 DIAGONAL ROAD
SUITE 370
ALEXANDRIA, VA 22314

In re Application of: Yasuda, et al.
Application No. 10/387,382
Filed: March 14, 2003
For: SYSTEM AND METHOD FOR VIRTUALIZING NETWORK STORAGES INTO A SINGLE FILE SYSTEM VIEW

DECISION ON PETITION TO MAKE SPECIAL (ACCELERATED EXAMINATION) UNDER M.P.E.P. §708.02 (VIII)

This is a decision on the Request for Reconsideration filed March 13, 2006 on the petition to make special under 37 C.F.R. §102(d) and M.P.E.P. §708.02(VIII): Accelerated Examination, originally filed on December 9, 2005, and dismissed on January 11, 2006.

The Petition is **GRANTED**.

M.P.E.P. §708.02, Section VIII which sets out the prerequisites for a grantable petition for Accelerated Examination under 37 C.F.R. §1.102(d) states in relevant part:

A new application (one which has not received any examination by the examiner) may be granted special status provided that applicant (and this term includes applicant's attorney or agent) complies with each of the following items:

(a) Submits a petition to make special accompanied by the fee set forth in 37 CFR 1.17(h);

(b) Presents all claims directed to a single invention, or if the Office determines that all the claims presented are not obviously directed to a single invention, will make an election without traverse as a prerequisite to the grant of special status;

(c) Submits a statement(s) that a pre-examination search was made, listing the field of search by class and subclass, publication, Chemical Abstracts, foreign patents, etc. The pre-examination search must be directed to the invention as claimed in the application for which special status is requested. A search made by a foreign patent office satisfies this requirement;

(d) Submits one copy each of the references deemed most closely related to the subject matter encompassed by the claims if said references are not already of record; and

(e) Submits a detailed discussion of the references, which discussion points out, with the particularity required by 37 CFR 1.111 (b) and (c), how the claimed subject matter is patentable over the references.

Petition to Make Special **GRANTED** since all of the requirements for special status under MPEP § 708.02(VIII) have been met.

The application file is being forwarded to the Examiner for accelerated examination in accordance with M.P.E.P. §708.02, Section VIII. If the application is subsequently allowed, it will be given priority for printing. See M.P.E.P. §1309.

Brian L. Johnson
Special Program Examiner
Technology Center 2100
Computer Architecture, Software and Information Security
571-272-3595

UNITED STATES PATENT AND TRADEMARK OFFICE

Commissioner for Patents
United States Patent and Trademark Office
P.O. Box 1450
Alexandria, VA 22313-1450
www.uspto.gov

Jacobson Holman PLLC
400 Seventh Street N.W.
Suite 600
Washington D.C. 20004

COPY MAILED

FEB 0 4 2008

OFFICE OF PETITIONS

In re Application of	:	
Steven W. Fickes	:	
Application No. 10/387,412	:	DECISION ON PETITION
Filed: March 14, 2003	:	TO WITHDRAW
Attorney Docket No. P67393US1	:	FROM RECORD
	:	

This is a decision on the Request to Withdraw as attorney or agent of record under 37 C.F.R. § 1.36(b), filed September 11, 2007.

The request is **APPROVED**.

A grantable request to withdraw as attorney/agent of record must be signed by every attorney/agent seeking to withdraw or contain a clear indication that one attorney is signing on behalf of another/others. A request to withdraw will not be approved unless at least 30 (thirty) days would remain between the date of approval and the later of the expiration date of a time to file a response or the expiration date of the maximum time period which can be extended under 37 C.F.R. § 1.136(a).

The request was signed by Michael R. Slobasky on behalf of all attorneys of record. All attorneys/agents have been withdrawn. Applicant is reminded that there is no attorney of record at this time.

All future correspondence will be directed to the first named inventor Steven W. Fickes at the address indicated below.

There is an outstanding Office action mailed January 7, 2008 that requires a reply from the applicant.

Telephone inquiries concerning this decision should be directed to Terri Williams at 571-272-2991.

T. Williams
Terri Williams
Petitions Examiner
Office of Petitions

cc: **Steven W. Fickes**
8600 Country Club Drive
Bethesda, MD 20854

UNITED STATES PATENT AND TRADEMARK OFFICE

UNITED STATES DEPARTMENT OF COMMERCE
United States Patent and Trademark Office
Address: COMMISSIONER FOR PATENTS
P.O. Box 1450
Alexandria, Virginia 22313-1450
www.uspto.gov

APPLICATION NUMBER	FILING OR 371(C) DATE	FIRST NAMED APPLICANT	ATTY. DOCKET NO./TITLE
10/387,412	03/14/2003	Steven W. Fickes	P67393US1

CONFIRMATION NO. 9709

POWER OF ATTORNEY NOTICE

136
JACOBSON HOLMAN PLLC
400 SEVENTH STREET N.W.
SUITE 600
WASHINGTON, DC 20004

OC000000028078668

Date Mailed: 02/04/2008

NOTICE REGARDING CHANGE OF POWER OF ATTORNEY

This is in response to the Power of Attorney filed 09/11/2007.

- The withdrawal as attorney in this application has been accepted. Future correspondence will be mailed to the new address of record. 37 CFR 1.33.

/tswilliams/

Office of Initial Patent Examination (571) 272-4000 or 1-800-PTO-9199

UNITED STATES PATENT AND TRADEMARK OFFICE

Commissioner for Patents
United States Patent and Trademark Office
P.O. Box 1450
Alexandria, VA 22313-1450
www.uspto.gov

KILPATRICK STOCKTON LLP
1001 WEST FOURTH STREET
WINSTON-SALEM NC 27101

COPY MAILED

AUG 1 0 2007

OFFICE OF PETITIONS

In re Application of	:	
Ronald Gene Ferguson et al	:	
Application No. 10/387,441	:	DECISION GRANTING PETITION
Filed: March 14, 2003	:	UNDER 37 CFR 1.137(b)
Attorney Docket No. 57300/330783	:	

This is a decision on the petition under 37 CFR 1.137(b), filed March 19, 2007, to revive the above-identified application.

The petition is **GRANTED**.

The petition satisfies the conditions for revival pursuant to the provisions of 37 CFR 1.137(b) in that (1) the reply in the form of an election and an amendment; (2) the petition fee; and (3) the required statement of unintentional delay have been received. Accordingly, the reply to the Restriction Requirement of December 29, 2005, is accepted as having been unintentionally delayed.

Telephone inquiries concerning this decision should be directed to the undersigned at (571) 272-3208.

This matter is being referred to Technology Center AU 3625.

Karen Creasy

Karen Creasy
Petitions Examiner
Office of Petitions

UNITED STATES PATENT AND TRADEMARK OFFICE

Commissioner for Patents
United States Patent and Trademark Office
P.O. Box 1450
Alexandria, VA 22313-1450
www.uspto.gov

MAILED
FROM DIRECTORS OFFICE

JAN 23 2006

TECHNOLOGY CENTER 3600

ROBERT E BUSHNELL
SUITE 330
1522 K STREET N W
WASHINGTON DC 20005-1202

In re:	LYNN G. HILDEN et al	: Decision on Petition for
Serial No.	10/387,442	: Review of a Requirement
Filed :	March 14, 2003	: for Restriction

For: SEVERANCE OF POLYCARBONATES AND POLYCARBONATE LAMINATES WITH LINEAR SHAPED CHARGE

This is a decision on the petition under 37 CFR 1.144, received on June 6, 2005 for review of the restriction requirement.

The applicant's petition is GRANTED-IN-PART.

The statement of facts can be found on page 2 of applicants petition. Additionally, it is noted that the examiners response to applicants traversal is found in the non-final rejection mailed on February 4, 2005. It is further noted that the examiner had made the restriction requirement final in that Office action.

Applicant argues that the examiner has not shown a prima facie case indicating a serious burden to the examiner and that the reasoning for restriction is improper.

With respect to the burden issue, petitioner argues that the groups should be all classified together thereby dismissing the prima facie case of serious burden.

A review of the restriction requirement reveals an error in the classification of the various groups.

Group I, drawn to the method of severing a pattern is properly classified in class 89/1.14 "EXPLOSIVE-OPERATED APPARATUS (E.G., EXPLOSIVE DOOR HINGE, TOOL EXPLOSIVELY ACTUATED, BAND RELEASE, EXPANSION OF TUBE, CABLE CUTTER, EXPLOSIVELY OPERATED SPLITTING WEDGES)". Note that although applicant intends the process to be used for a canopy, it can be applied to other devices or to other canopys that are not specifically aircraft canopys.

Group II, is drawn to the combination of an aircraft canopy which is properly classified in class 244/122AF, SEATS AN SAFETY BELTS, EJECTION SEATS, AUTOMATIC SEQUENCE, CANOPY RELEASE. Although as applicant argues, this is directed to seats and safety belts, it has been common practice in the Office to place release mechanisms for the canopy in this area when it is claimed in combination with the aircraft canopy.

Group III, for similar reasons of Group I, Group III is not specific to an *aircraft* canopy and therefore is properly classified in class 89/1.14.

Thus, the examiner is correct that applicants elected group II has a different classification(as corrected above) from either groups I and III .

With respect to the reasons for restriction, petitioner contends that the restriction between I and II is improper because the examples given are unreasonable.

A review of the application indicates that the product claim 26 was found allowable. Claim 20, being a method, which includes all the limitations of the allowable product claim, is therefore also allowable pursuant to 821.04(b). Applicant's argument with respect to the restriction between these two groups are therefore rendered moot.

With respect to the restriction between groups II and III, petitioner argues that there is no combination-subcombination relation between inventions II and III. Here, it appears that the petitioner mistakenly misread the restriction. The examiner set forth a restriction of a two subcombinations relationship, which are *disclosed* as useable together. Since the petition has not advanced any arguments directed to this relationship, this argument is dismissed.

In summary, the petition is hereby **GRANTED-IN-PART**.

The application will be returned to the examiner for consideration of claims 20-25 in light of this decision. The restriction of claims 32 and 33 are deemed proper and remain withdrawn from consideration.

Any questions or comments with respect to this decision should be forwarded to Michael J. Carone at (571) 272-6873.

Donald T. Hajec, Director
Technology Center 3600
(571) 272-5150

UNITED STATES PATENT AND TRADEMARK OFFICE

Commissioner for Patents
United States Patent and Trademark Office
P.O. Box 1450
Alexandria, VA 22313-1450
www.uspto.gov

KEYSER MASON BALL LLP
FOUR ROBERT SPECK PARKWAY
SUITE 1600
MISSISSAUGA ON 1421S1

COPY MAILED

MAR 14 2005

OFFICE OF PETITIONS

In re Application of	:
Masoud Mafi et al	:
Application No. 10/387,444	: DECISION GRANTING PETITION
Filed: March 14, 2003	: UNDER 37 CFR 1.137(b)
Attorney Docket No. 6449-4	:

This is a decision on the petition under 37 CFR 1.137(b), filed November 25, 2004, to revive the above-identified application.

The petition is **GRANTED**.

The petition satisfies the conditions for revival pursuant to the provisions of 37 CFR 1.137(b) in that (1) the reply in the form of an RCE; (2) the petition fee; and (3) the required statement of unintentional delay have been received. Accordingly, the reply to the final Office action of April 5, 2004, is accepted as having been unintentionally delayed.

Telephone inquiries concerning this decision should be directed to the undersigned at (571) 272-3208.

This matter is being referred to Technology Center AU 3749.

Karen Creasy

Karen Creasy
Petitions Examiner
Office of Petitions
Office of the Deputy Commissioner
for Patent Examination Policy

UNITED STATES PATENT AND TRADEMARK OFFICE

Commissioner for Patents
United States Patent and Trademark Office
P.O. Box 1450
Alexandria, VA 22313-1450
www.uspto.gov

COPY MAILED

DEC 1 0 2007

OFFICE OF PETITIONS

AKIN GUMP STRAUSS HAUER & FELD L.L.P.
ONE COMMERCE SQUARE
2005 MARKET STREET, SUITE 2200
PHILADELPHIA PA 19103

In re Patent No. 6,998,993	:	
Issue Date: February 14, 2006	:	
Application No. 10/387,489	:	DECISION ON PETITION
Filed: March 14, 2003	:	
For: PHOTORESIST PUMP DISPENSE	:	
DETECTION SYSTEM	:	

This is a decision on the petition under 37 CFR 1.182, filed November 16, 2006, requesting issuance of a duplicate Letters Patent for the above-identified patent.

The petition is **GRANTED**.

The Publishing Division is directed to issue a duplicate Letters Patent.

As authorized, the $400 fee for the petition under 37 CFR 1.182 has been charged to petitioner's deposit account.

Telephone inquiries concerning this decision may be directed to the undersigned at (571) 272-3205. Inquiries regarding the issuance of a duplicate Letters Patent may be directed to Krystal Paige in the Publishing Division at (703) 308-9250, Ext. 139.

A copy of this decision is being faxed to Publishing Division for issuance of a duplicate Letters Patent.

Alesia M. Brown
Petitions Attorney
Office of Petitions

cc: Krystal Paige, South Tower, 8th Floor, Room C32 (Fax No. (571) 270-9937)

UNITED STATES PATENT AND TRADEMARK OFFICE

UNITED STATES DEPARTMENT OF COMMERCE
United States Patent and Trademark Office
Address: COMMISSIONER FOR PATENTS
P.O. Box 1450
Alexandria, Virginia 22313-1450
www.uspto.gov

APPLICATION NUMBER	FILING OR 371(C) DATE	FIRST NAMED APPLICANT	ATTY. DOCKET NO./TITLE
10/387,489	03/14/2003	Ching-Hui Wang	08409.0041

CONFIRMATION NO. 1091

POA ACCEPTANCE LETTER

570
AKIN GUMP STRAUSS HAUER & FELD L.L.P.
ONE COMMERCE SQUARE
2005 MARKET STREET, SUITE 2200
PHILADELPHIA, PA 19103

OC000000027191317

Date Mailed: 12/10/2007

NOTICE OF ACCEPTANCE OF POWER OF ATTORNEY

This is in response to the Power of Attorney filed 02/14/2006.

The Power of Attorney in this application is accepted. Correspondence in this application will be mailed to the above address as provided by 37 CFR 1.33.

/ambrown/

Office of Initial Patent Examination (571) 272-4000 or 1-800-PTO-9199

UNITED STATES PATENT AND TRADEMARK OFFICE

COMMISSIONER FOR PATENTS
UNITED STATES PATENT AND TRADEMARK OFFICE
P.O. BOX 1450
ALEXANDRIA, VA 22313-1450
www.uspto.gov

BACON & THOMAS, PLLC
625 SLATERS LANE
FOURTH FLOOR
ALEXANDRIA VA 22314-1176

MAILED

MAR 29 2010

OFFICE OF PETITIONS

In re Patent No. 6,835,227	:	
Issue Date: December 28, 2004	:	
Application No. 10/387,502	:	NOTICE
Filed: March 14, 2003	:	
Attorney Docket No. GIA 177	:	

This is a notice regarding your request for acceptance of a fee deficiency submission under 37 CFR 1.28 filed January 8, 2010. On September 1, 1998, the Court of Appeals for the Federal Circuit held that 37 CFR 1.28(c) is the sole provision governing the time for correction of the erroneous payment of the issue fee as a small entity. **See DH Technology v. Synergystex International, Inc. 154 F.3d 1333, 47 USPQ2d 1865 (Fed. Cir. Sept. 1, 1998).**

The Office no longer investigates or rejects original or reissue applications under 37 CFR 1.56. **1098 Off. Gaz. Pat. Office 502 (January 3, 1989)**. Therefore, nothing in this Notice is intended to imply that an investigation was done.

Your fee deficiency submission under 37 CFR 1.28 is hereby accepted. The petition is **GRANTED**.

This application is no longer entitled to small entity status. Accordingly, all future fees paid in this application must be paid at the large entity rate.

This file is being forwarded to Files Repository.

Telephone inquiries related to this decision should be directed to the Kimberly Inabinet at (571) 272-4618.

Carl Friedman
Petitions Examiner
Office of Petitions

UNITED STATES PATENT AND TRADEMARK OFFICE

COMMISSIONER FOR PATENTS
UNITED STATES PATENT AND TRADEMARK OFFICE
P.O. BOX 1450
ALEXANDRIA, VA 22313-1450
www.uspto.gov

SEP 29 2003

UR
PAPER NO. 3

In re Application of :
Peter T. Halpin et al. :
Serial Number: 10/387,505 : PETITION UNDER
Filed: March 14, 2003 : M.P.E.P.708.02, V
For: RECOVERY OF METAL VALUES FROM CERMET :

This is in response to the petition filed, June 11, 2003 requesting that the above-identified application be granted Special Status under section 708.02 (V) of the MPEP and 37 CFR 1.102(c) **(no fee required)**.

The request for Special Status considered under Section 708.02 (V) is granted because criteria under 37 CFR 1.102(c) has been met.

Accordingly the petition is **GRANTED.**

JMStone

Jacqueline M. Stone, Director
Technology Center 1700
Chemical and Materials Engineering

Bacon & Thomas , PLLC
625 Slaters Lane, Fourth Floor
Alexandria, VA 22314

SPE RESPONSE FOR CERTIFICATE OF CORRECTION

Paper No.: _____

DATE : 3/29/2010

TO SPE OF : ART UNIT 2168 (2100)

SUBJECT : Request for Certificate of Correction for Appl. No.: 11/0/387,508 Patent No.: 7,085,752

Please respond to this request for a certificate of correction within 7 days.

FOR IFW FILES:

Please review the requested changes/corrections as shown in the **COCIN** document(s) in the IFW application image. No new matter should be introduced, nor should the scope or meaning of the claims be changed.

Please complete the response (see below) and forward the completed response to scanning using document code **COCX**.

FOR PAPER FILES:

Please review the requested changes/corrections as shown in the attached certificate of correction. Please complete this form (see below) and forward it with the file to:

Certificates of Correction Branch (CofC)
Randolph Square – 9D10-A
Palm Location 7580

Ernest C. White, LTE
Randolph Sq. Ste 9D62A
703-756-1590

Thank You For Your Assistance

The request for issuing the above-identified correction(s) is hereby:
Note your decision on the appropriate box.

xApproved	**All** changes apply.
❑ **Approved in Part**	Specify below which changes **do not** apply.
❑ **Denied**	State the reasons for denial below.

_____

_____

_____

SPE /Tim Vo/ AU2168

UNITED STATES PATENT AND TRADEMARK OFFICE

Commissioner for Patents
United States Patent and Trademark Office
P.O. Box 1450
Alexandria, VA 22313-1450
www.uspto.gov

Paul A. Calvo
STERNE, KESSLER GODLSTEIN & FOX P.L.L.C.
1100 NEW YORK AVENUE, N.W.
WASHINGTON DC 2005-3934

OCT 19 2007

In re Application of	:
Burton et al	:
Serial No.: 10/387,525	:Decision on Petition
Filed : 14 MARCH 2003	:
Attorney Docket No.: 1530001000u	:

This letter is in response to the Petition under 37 C.F.R. 1.144 filed on 26 July 2007 requesting reconsideration of the restriction requirement. The delay in acting upon this petition is regretted.

BACKGROUND

On 15 December 2005, the examiner mailed a restriction requirement in which the newly filed claims 66-91 were divided into 12 groups.

On 6 June 2006, Applicants elected Group II with traverse.

On 24 August 2006, the examiner considered the traversal, made the restriction requirement final and mailed to applicants a non-final Office action, rejecting claims 66, 68-85 and 90.

On 26 February 2007, the examiner considered applicants response, and mailed to applicants a final Office action, rejecting claims 66, 68-85 and 90 for lack of enablement under 35 USC 112, first paragraph.

On 29 May 2007, Applicants presented an amendment canceling claims 67, 86-89 and 91.

On 26 July 2007, applicants filed this petition for reconsideration of the restriction requirement, concurrent with a response and request for continued examination.

DISCUSSION

The petition and file history have been carefully considered. The file histories of the various related applications have also been carefully reviewed.

Because all claims directed to species human, bird and fish have been cancelled in the amendment filed 29 May 2007, this petition decision will not address the propriety of the provisional election of species requirement among human, bird and fish.

Because all claims directed to Groups I and VII, wherein the polypeptide is an autoantigen, have been cancelled in the amendment filed 29 May 2007, this petition decision will only address the propriety of the restriction requirements between Groups II-VI and VII-XII.

A) Criteria for Restriction Between Patentably Distinct Inventions

MPEP 803 states:

> There are two criteria for a proper requirement for restriction between patentably distinct inventions:
> (A) The inventions must be independent (see MPEP § 802.01, § 806.06, § 808.01) or distinct as claimed (see MPEP § 806.05 - § 806.05(j)); and
> (B) There would be a serious burden on the examiner if restriction is not required (see MPEP § 803.02, § 808, and § 808.02).

The MPEP also provides guidance in 806.01, stating "In passing upon questions of double patenting and restriction, it is the claimed subject matter that is considered and such claimed subject matter must be compared in order to determine the question of distinctness or independence."

Finally, "Where the claims of an application define the same essential characteristics of a single disclosed embodiment of an invention, restriction there between should never be required. This is because the claims are not directed to distinct inventions; rather they are different definitions of the same disclosed subject matter, varying in breadth or scope of definition" (see MPEP 806.06).

Here, several pairs of groups appear to contain overlapping subject matter. Group II and Group VIII are both drawn to method of generating an immune response comprising synthesis of a breast cancer tumor antigen. The only difference between the groups is that Group II, the treatment is preventive while in Group VII the treatment is ameliorative. Similar division was set forth between Group III and IX, Group IV and X, Group V and XI and Group VI and XII. Each of these groups will be rejoined.

Turning now to the restriction requirement made between each of Groups II-VI and VIII-XII, it is noted that the antigens recited in Groups II-VI and VIII-XII are all listed in the alternative of a single claim 69, which is reproduced below.

69. (previously presented) The method of claim 68, wherein the tumor-specific antigen is selected from the group consisting of a breast cancer antigen, colon cancer antigen, a fetal antigen, an antigen encoded by an oncogene, and an activation marker.

MPEP 803.02 states that the examiner may require a provisional election of species among alternatives recited in a single claim using FP 8.01.

To clarify the record, the restriction requirement should have set forth as a provisional election of species requirement using the following text:

> This application contains claims directed to the following patentably distinct species listed in Claim 69. The species are independent or distinct because claims to the different species recite the mutually exclusive characteristics of such species. In addition, these species are not obvious variants of each other based on the current record.
>
> Applicant is required under 35 U.S.C. 121 to elect a single disclosed species for prosecution on the merits to which the claims shall be restricted if no generic claim is finally held to be allowable. Currently, claims 66, 68-85 and 91 are generic.
>
> There is an examination and search burden for these patentably distinct species due to their mutually exclusive characteristics. The species require a different field of search (e.g., searching different classes/subclasses or electronic resources, or employing different search queries); and/or the prior art applicable to one species would not likely be applicable to another species; and/or the species are likely to raise different non-prior art issues under 35 U.S.C. 101 and/or 35 U.S.C. 112, first paragraph.
>
> Applicant is advised that the reply to this requirement to be complete <u>must</u> include (i) an election of a species to be examined even though the requirement may be traversed (37 CFR 1.143) and (ii) identification of the claims encompassing the elected species, including any claims subsequently added. An argument that a claim is allowable or that all claims are generic is considered nonresponsive unless accompanied by an election.
>
> The election of the species may be made with or without traverse. To preserve a right to petition, the election must be made with traverse. If the reply does not distinctly and specifically point out supposed errors in the election of species requirement, the election shall be treated as an election without traverse. Traversal must be presented at the time of election in order to be considered timely. Failure to timely traverse the requirement will result in the loss of right to petition under 37 CFR 1.144. If claims are added after the election, applicant must indicate which of these claims are readable on the elected species.

Should applicant traverse on the ground that the species are not patentably distinct, applicant should submit evidence or identify such evidence now of record showing the species to be obvious variants or clearly admit on the record that this is the case. In either instance, if the examiner finds one of the species unpatentable over the prior art, the evidence or admission may be used in a rejection under 35 U.S.C. 103(a) of the other species.

Upon the allowance of a generic claim, applicant will be entitled to consideration of claims to additional species which depend from or otherwise require all the limitations of an allowable generic claim as provided by 37 CFR 1.141.

Because applicant has elected "breast cancer tumor specific antigen" and received an Office action on the merits for their elected invention, the Office is not inviting applicants at this time to change their election. The Office will continue to examine the elected subject matter following examination practice set forth in Section 803.02 of MPEP.

DECISION

The petition is **GRANTED-IN-PART** for the reasons set forth above.

The request to withdraw the restriction requirement between Groups I-VI, drawn to methods of preventing, and Groups VII-XII, drawn to methods of ameliorating, is **GRANTED**.

The request to withdraw the restriction requirement of a single tumor specific antigen listed in claim 69 between Groups I-XII is **GRANTED-IN-PART** to the extent that the restriction requirement for a single polypeptide selected from the group consisting of a breast cancer tumor, a colon cancer tumor, a fetal antigen, an oncogene and an activation marker has been reformulated as a provisional election of species requirement.

The application will be forwarded to the examiner to consider the responses filed since the last Office action and for further action consistent with this decision.

Any request for reconsideration must be filed within two (2) months of the mailing date of this decision.

Should there be any questions about this decision, please contact Special Program Examiner Julie Burke, by letter addressed to Director, Technology Center 1600, at the address listed above, or by telephone at 571-272-1600 or by facsimile sent to the general Office facsimile number, 571-273-8300.

Christopher Low

Christopher Low
Director, Technology Center 1600 (Acting)

UNITED STATES PATENT AND TRADEMARK OFFICE

Commissioner for Patents
United States Patent and Trademark Office
P.O. Box 1450
Alexandria, VA 22313-1450
www.uspto.gov

Paper No. 9

Manelli, Denison & Selter
Suite 700
2000 M Street N.W.
Washington, DC 20036

COPY MAILED

DEC 09 2004

OFFICE OF PETITIONS

In re Application of :
Alan R. Jones :
Application No. 10/387,528 : ON PETITION
Filed: March 14, 2003 :
Attorney Docket No. 84665 2683 TAL :

This is a decision on the petition, filed October 18, 2004, to revive the above-identified application under the provisions of 37 CFR 1.137(b).

The above-identified application became abandoned for failure to reply in a timely manner to the non-final Office action mailed March 29, 2004, which set a shortened statutory period for reply of one (1) month or thirty (30) days (whichever is later). No extension of time under the provisions of 37 CFR 1.136(a) was obtained.

The petition is **GRANTED**.

Telephone inquiries concerning this decision may be directed to the undersigned at (571) 272-3204. All other inquiries regarding this application should be directed to the Technology Center.

The application file is being forwarded to Technology Center AU 3625 for consideration of the response filed October 18, 2004.

Sherry D. Brinkley
Petitions Examiner
Office of Petitions
Office of the Deputy Commissioner
for Patent Examination Policy

UNITED STATES PATENT AND TRADEMARK OFFICE

COMMISSIONER FOR PATENTS
UNITED STATES PATENT AND TRADEMARK OFFICE
P.O. BOX 1450
ALEXANDRIA, VA 22313-1450
www.uspto.gov

MAIL

JUL 1 8 2005

DIRECTOR OFFICE
TECHNOLOGY CENTER 2100

Joe McKinney Muncy
BIRCH, STEWART, KOLASCH & BIRCH, LLP
P.O. Box 747
Falls Church, VA 22040-0747

In re Application of:
Chih-Hung CHIEN et al
Appl. No.: 10/387,529
Filed: March 14, 2003
For: METHOD AND SYSTEM FOR APPLYING PART

DECISION ON PETITION
UNDER 37 CFR § 1.59

This is a decision on the petition under 37 CFR § 1.59(b), filed July 15, 2003 to expunge the priority document submitted on July 30, 2002.

The petition is **GRANTED**.

Petitioner requests that the certified copy of Taiwan Application No. 091116960 filed on July 30, 2002 be expunged from the record. Petitioner states that the priority document filed on July 30, 2002 was submitted in error and the correct priority document was submitted on March 14, 2003. The petition fee set forth in 37 CFR § 1.17(h) has been paid.

The expunged material has been closed from public view and will not be returned to applicant.

It is noted that the instant application has been published on April 8, 2004. Thus, the priority document submitted on July 30, 2002 has already been made available to the public and subject to copying by the public. According, the Office cannot guarantee that the information being closed as a result of this decision was not previously accessed by the public.

Any inquiry concerning this decision should be directed to the undersigned whose telephone number is (571) 272-3613.

Vincent N. Trans
Special Program Examiner
Technology Center 2100
Computer Architecture, Software, and
Information Security

UNITED STATES PATENT AND TRADEMARK OFFICE

Commissioner for Patents
United States Patent and Trademark Office
P.O. Box 1450
Alexandria, VA 22313-1450
www.uspto.gov

COPY MAILED

DEC 07 2007

OFFICE OF PETITIONS

EDWARDS ANGELL PALMER & DODGE LLP
P.O. BOX 55874
BOSTON, MA 02205

In re Application of :
Hidetaka Mizumaki :
Application No. 10/387,582 : ON PETITION
Filed: March 12, 2003 :
Attorney Docket No. 58704 (70904)

This is a decision on the petition, filed December 6, 2007 under 37 CFR 1.313(c)(2) to withdraw the above-identified application from issue after payment of the issue fee.

The petition is **GRANTED**.

The above-identified application is withdrawn from issue for consideration of a submission under 37 CFR 1.114 (request for continued examination). See 37 CFR 1.313(c)(2).

Petitioner is advised that the issue fee paid on October 29, 2007 in the above-identified application cannot be refunded. If, however, the above-identified application is again allowed, petitioner may request that it be applied towards the issue fee required by the new Notice of Allowance.[1]

Telephone inquiries should be directed to Irvin Dingle at (571) 272-3210.

This matter is being referred to Technology Center AU 2113 for processing of the request for continued examination under 37 CFR 1.114 and for consideration of the concurrently filed Information Disclosure Statement.

Irvin Dingle
Petitions Examiner
Office of Petitions

[1] The request to apply the issue fee to the new Notice may be satisfied by completing and returning the new Issue Fee Transmittal Form PTOL-85(b), which includes the following language thereon: Commissioner for Patents is requested to apply the Issue Fee and Publication Fee (if any) or re-apply any previously paid issue fee to the application identified above. Petitioner is advised that, whether a fee is indicated as being due or not, the Issue Fee Transmittal Form **must** be completed and timely submitted to avoid abandonment. Note the language in bold text on the first page of the Notice of Allowance and Fee(s) Due (PTOL-85).

UNITED STATES PATENT AND TRADEMARK OFFICE

COMMISSIONER FOR PATENTS
UNITED STATES PATENT AND TRADEMARK OFFICE
P.O. BOX 1450
ALEXANDRIA, VA 22313-1450
www.uspto.gov

Paper No. 7

Mason Mason & Albright
2306 South Eads Street
PO Box 2246
Arlington, VA 22202

COPY MAILED
MAR 2 9 2004
OFFICE OF PETITIONS

In re Application of :
Jeffrey A. Scozzafava :
Application No. 10/387,589 : ON PETITION
Filed: March 14, 2003 :
Attorney Docket No. 1650/26 :

This is a decision on the petition under 37 CFR 1.137(b), filed March 16, 2004, to revive the above-identified application.

The petition is **DISMISSED**.

Any request for reconsideration of this decision must be submitted within TWO (2) MONTHS from the mail date of this decision. Extensions of time under 37 CFR 1.136(a) are permitted. The reconsideration request should include a cover letter entitled "Renewed Petition under 37 CFR 1.137(b)." This is **not** final agency action within the meaning of 5 U.S.C. § 704.

The above-identified application became abandoned for failure to reply in a timely manner in reply to the Notice to File Missing Parts of Application mailed May 6, 2003. The Notice set a period for reply of Two (2) months from the mail date of the Notice. No extensions of time under the provisions of 37 CFR 1.136 have been obtained. Accordingly, the application became abandoned on July 7, 2003.

A grantable petition under 37 CFR 1.137(b) must be accompanied by: (1) the required reply, unless previously filed; (2) the petition fee as set forth in 37 CFR 1.17(m); (3) a statement that the entire delay in filing the required reply from the due date for the reply until the filing of a grantable petition pursuant to 37 CFR 1.137(b) was unintentional; and (4) any terminal disclaimer (and fee as set forth in 37 CFR 1.20(d)) required by 37 CFR 1.137(c). Where there is a question as to whether either the abandonment or the delay in filing a petition under 37 CFR 1.137 was unintentional, the Commissioner may require additional information. See MPEP 711.03(c)(III)(C) and (D). The instant petition lack(s) item(s) (1).

Item (1), Corrected formal drawings in compliance with 37 CFR 1.84 and 37 CFR 1.121 as required by the Notice to File Missing Parts must be submitted.

Further correspondence with respect to this matter should be addressed as follows:

By mail:	Mail Stop Petitions PO Box 1450 Alexandria, VA 22313-1450
By facsimile:	(703) 872-9306 Attn: Office of Petitions
By hand:	2201 South Clark Place Crystal Plaza 2, Lobby Room 1B03 Arlington, VA 22202

Telephone inquiries concerning this decision should be directed to Latrice Bond at (703) 308-6911.

Latrice Bond

Latrice Bond
Paralegal Specialist
Office of Petitions
Office of the Deputy Commissioner
for Patent Examination Policy

Attachment: Notice to File Missing Parts

UNITED STATES PATENT AND TRADEMARK OFFICE

Commissioner for Patents
United States Patent and Trademark Office
P.O. Box 1450
Alexandria, VA 22313-1450
www.uspto.gov

Paper No. 10

MASON, MASON & ALBRIGHT
2306 SOUTH EADS STREET
PO BOX 2246
ARLINGTON, VA 22202

COPY MAILED
MAY 2 5 2004
OFFICE OF PETITIONS

In re Application of
Jeffrey A. Scozzafava
Application No. 10/387,589
Filed: March 14, 2003
Attorney Docket No. 1650/26

ON PETITION

This is a decision on the renewed petition under 37 CFR 1.137(b), filed May 10, 2004, to revive the above-identified application.

The petition is **GRANTED.**

Telephone inquiries concerning this decision should be directed to the undersigned at (703) 306-5594.

The application file is being forwarded to the Office of Initial Patent Examination for further processing.

Retta Williams

Retta Williams
Petitions Examiner
Office of Petitions
Office of the Deputy Commissioner
for Patent Examination Policy

UNITED STATES PATENT AND TRADEMARK OFFICE

COMMISSIONER FOR PATENTS
UNITED STATES PATENT AND TRADEMARK OFFICE
P.O. BOX 1450
ALEXANDRIA, VA 22313-1450
www.uspto.gov

STERNE, KESSLER, GOLDSTEIN & FOX
PLLC
1100 NEW YORK AVENUE, N.W.
WASHINGTON, DC 20005

MAIL

SEP 17 2004

DIRECTOR OFFICE
TECHNOLOGY CENTER 2600

In re Application of
Krzyzanowski et al.
Application No. 10/387,590
Filed: March 14, 2003
For: LEGACY DEVICE BRIDGE FOR RESIDENTIAL OR NON-RESIDENTIAL NETWORKS

DECISION ON PETITION TO MAKE SPECIAL

This is a decision on the petition filed July 21, 2004 under Manual of Patent Examination Procedure §708.02, VIII requesting accelerated examination.

The petition under Manual of Patent Examination Procedure §708.02, VIII, must:
(1) be filed prior to receiving any examination by the examiner,
(2) be accompanied by the required fee- $130,
(3) the claims should be directed to a single invention (if it is determined that the claims pertain to more than one invention, then applicant will have to make an election without traverse or forfeit accelerated examination status),
(4) state that a pre-examination search was made, and fully discuss the search method employed, such as classes and subclasses searched, publications, Chemical abstracts, patents, etc. A search made by a foreign patent office satisfies this requirement,
(5) be accompanied by a copy of each of the references most closely related to the subject matter encompassed by the claims if said references are not already of record,
(6) fully discuss the references, pointing out with the particularity required by 37 C.F.R. §1.111 (b) and (c), how the claimed subject matter is patentable over the references.

The petitioner meets all the above-listed requirements. Accordingly, the petition is **GRANTED**.

The application will retain its special status throughout its entire prosecution, including any appeal to the Board of Patent Appeals and Interferences, subject only to diligent prosecution by the applicant. The application file is being forwarded to the examiner for appropriate action in due course.

Kenneth A. Wieder
Special Program Examiner
Technology Center 2600
Communications
571-272-2986

UNITED STATES PATENT AND TRADEMARK OFFICE

COMMISSIONER FOR PATENTS
UNITED STATES PATENT AND TRADEMARK OFFICE
P.O. BOX 1450
ALEXANDRIA, VA 22313-1450
WWW.USPTO.GOV

Paper No. 4

GUNN, LEE & HANOR, P.C.
700 NORTH ST. MARY'S STREET
SUITE 1500
SAN ANTONIO, TX 78205

COPY MAILED

JUN 1 6 2003

OFFICE OF PETITIONS

In re Application of
Stewart
Application No. 10/387,597
Filed: March 17, 2003
Attorney Docket No. P-17.146

ON PETITION

This decision concerns the May 23, 2003 "Petition to Correct Filing Date in Patent Application" which is being properly treated as a petition under 37 CFR 1.10(d).

The petition is **DISMISSED.**

The petition requests a filing date of March 14, 2003, alleging that the application was deposited in the USPS "Express Mail" on that day rather than on March 17, 2003 as shown by the "date-in" entry on the mailing label bearing the number "EV097876075US."

37 CFR 1.10(d) requires, *inter alia*,[1] a showing, establishing that the requested filing date was the date of deposit of the application in the "Express Mail" service prior to the last scheduled pickup for that day, and, corroborated by evidence from the USPS.[2]

The Office notes the following:

(1) Two different copies of the "Express Mail" mailing label are enclosed with the petition: the original, apparently retained by counsel after the application package had been deposited in the "Express Mail" drop box ("first mailing label"); and the "Customer Copy" date-stamped "March 17, 2003" by the USPS ("second mailing label").

(2) The March 14, 2003 "date-in" in the first mailing label appears to have been written in by someone in counsel's firm, when it should have been entered by the USPS. Therefore, the effect of this copy of mailing label is no more than a Certificate of Mailing, in that, it merely suggests an intent to deposit that package on March 14, 2003.

(3) According to the USPS official website, www.usps.gov (Track & Confirm), the package mailed under this label number was still in San Antonio, Texas, its city of origination, on March 17, 2003 at 6:19 pm, three days after the alleged date of

---

[1] 37 CFR 1.10(d)(1) requires that the petition be filed promptly after the person becomes aware of the incorrect "date-in" entry by the USPS. This requirement is considered met. Also, as required by 37 CFR 1.10(d)(2), the "Express Mail" mailing label number is on the application transmittal.

[2] 37 CFR 1.10(d)(3); MPEP section 513 (Rev. 1, Feb. 2003).

deposit.[3] This is consistent with the "date-in" and the USPS date-stamp shown in the second mailing label.

In view of the above, the requested filing date of March 14, 2003 is **not** corroborated by evidence from the USPS as the actual date of deposit in the USPS "Express Mail." The petition is thus dismissed. No fee is owed.

The application is being returned to the Office of Initial Patent Examination to await a response to the May 15, 2003 "Notice to File Missing Parts of Nonprovisional Application."

Telephone inquiries should be directed to the undersigned at (703) 308-0763.

RC Tang
Petitions Attorney
Office of Petitions

---

[3] Copy of printout attached.

UNITED STATES PATENT AND TRADEMARK OFFICE

Technology Center 1700

rvk

Mailed: 11-3-05 Paper Number: ____

In re application of :
Steve J. Morris : DECISION ON
Serial No. 10/387,610 : PETITION
Filed: March 13, 2003 :
For: FIBER GLASS PRODUCT INCORPORATING STRING BINDERS:

This is a response to the PETITION TO WITHDRAW HOLDING OF ABANDONMENT BASED ON FAILURE TO RECEIVE OFFICE ACTION, filed August 23, 2005. The petition requests that the abandonment, as set forth in the Notice of Abandonment of June 20, 2005, for failure to timely file a proper response to the Office letter dated November 17, 2004 be withdrawn. The petitioner asserts that the Office letter of November 17, 2004 was not received by applicant.

DECISION

The instant request is accepted as a timely petition under 37 C.F.R. 1.181 (no fee), and is evaluated under the procedures regarding an acceptable showing of non-receipt of an office action. See MPEP 711.03(c)(II).

The evidence presented is sufficient to establish that the Office letter of November 17, 2004 was not received by petitioner. The evidence provided includes a statement by the petitioner that the Office letter of November 17, 2004 was not received, a statement that a search of the file and docket records was made, and a statement that the search revealed the Office letter of November 17, 2004 was not received. Also provided are a copy of the attorney's mail log from the USPTO from November 17, 2004 to December 31, 2004 where the Office letter of November 17, 2004 would have been posted had it been timely received, and Declarations of Kay Farmer (Patent Paralegal) and J. Jason Link (Attorney of

Records) stating that there are no records of receipt of the Office letter mailed from the USPTO on November 17, 2004.

Therefore, the abandonment is hereby withdrawn, and the application is returned to pending status. The application shall be forwarded to the examiner for prompt remailing of the above noted Office letter to the correspondence address and restarting of the statutory period of response from the remail date thereof.

The Petition is **GRANTED**.

Jacqueline M. Stone

Jacqueline Stone, Director
Technology Center 1700
Chemical and Materials Engineering

J.JASON LINK, ESQ
KILPATRICK STOCKTON LLP
1001 WEST FOURTH STREET
WINSTON-SALEM, NC 27101

UNITED STATES PATENT AND TRADEMARK OFFICE

COMMISSIONER FOR PATENTS
UNITED STATES PATENT AND TRADEMARK OFFICE
P.O. BOX 1450
ALEXANDRIA, VA 22313-1450
WWW.USPTO.GOV

Paper No. None

COPY MAILED

MAR 14 2007

OFFICE OF PETITIONS

J. Jason Link, Esq.
Kilpatrick Stockton LLP
1001 West Fourth Street
Winston-Salem NC 27101

In re Application of	:	
Steven J. Morris	:	
Application No. 10/387,610	:	
Filed: March 13, 2003	:	DECISION ON PETITION
Attorney Docket Number:	:	UNDER 37 C.F.R. §1.137(B)
32961/282976	:	
Title: FIBER GLASS PRODUCT	:	
INCORPORATING STRING BINDERS	:	

This is a decision on the petition filed November 20, 2006, pursuant to 37 C.F.R. §1.137(b)[1], to revive the above-identified application.

The above-identified application became abandoned for failure to reply within the meaning of 37 C.F.R §1.113 in a timely manner to the final Office action mailed April 17, 2006, which set a shortened statutory period for reply of three months. An after-final amendment was received on October 17, 2006, along with a three-month extension of time, and an advisory action was mailed

1 A grantable petition pursuant to 37 C.F.R §1.137(b) must be accompanied by:
(1) The reply required to the outstanding Office action or notice, unless previously filed;
(2) The petition fee as set forth in § 1.17(m);
(3) A statement that the entire delay in filing the required reply from the due date for the reply until the filing of a grantable petition pursuant to this paragraph was unintentional. The Commissioner may require additional information where there is a question whether the delay was unintentional, and;
(4) Any terminal disclaimer (and fee as set forth in § 1.20(d)) required pursuant to paragraph (d) of this section.

on November 15, 2006. No further extensions of time under the provisions of 37 C.F.R §1.136(a) were available, and no further responses were received. Accordingly, the above-identified application became abandoned on October 18, 2006.

With the present petition, Petitioner has submitted the petition fee and the proper statement of unintentional delay. Petitioner has further included a Request for Continued Examination (RCE) under 37 C.F.R. §1.114, and the associated fee.

No terminal disclaimer is required. The RCE has been accepted as the required reply under 37 C.F.R. §1.137(b)(1). The amendment submitted on October 17, 2006 shall serve as the required submission.

As such, the petition under 37 C.F.R. §1.137(b) is **GRANTED**.

The Technology Center will be notified of this decision. The Technology Center's support staff will notify the Examiner of this decision, so that the RCE can be processed.

Telephone inquiries regarding *this decision* should be directed to the undersigned at (571) 272-3225[2]. All other inquiries concerning examination procedures or status of the application should be directed to the Technology Center.

Paul Shanoski
Senior Attorney
Office of Petitions
United States Patent and Trademark Office

---

2 Petitioner will note that all practice before the Office should be in writing, and the action of the Office will be based exclusively on the written record in the Office. See 37 C.F.R. §1.2. As such, Petitioner is reminded that no telephone discussion may be controlling or considered authority for Petitioner's further action(s).

UNITED STATES PATENT AND TRADEMARK OFFICE

Commissioner for Patents
United States Patent and Trademark Office
P.O. Box 1450
Alexandria, VA 22313-1450
www.uspto.gov

JJGJR.: 06-06

Paper No:__

HUGHES LAW FIRM PLLC
4164 MERIDIAN STREET/STE. 302
BELLINGHAM, WA 98226

COPY MAILED

JUN 12 2006

OFFICE OF PETITIONS

In re Application of	:	
Taylor	:	DECISION
Application No. 10/387,638	:	
Filing Date: 13 March, 2003	:	
Attorney Docket No.: 02030P//P415774	:	

This is a revised decision on the petition filed on 11 May, 2006, alleging unavoidable delay under 37 C.F.R. §1.137(a).

NOTE: **The software required to enter the Revocation/Power of Attorney was not available at the time this decision was prepared–and so Petitioner hereby is placed on Notice that data has not been entered. Petitioner should resubmit the Notice to ensure that the change is entered**.

For the reasons set forth below. the petition as considered under 37 C.F.R. §1.137(a) is **GRANTED**.

BACKGROUND

The record reflects that:

- Petitioner failed to reply timely and properly to a final Office action mailed on 20 April, 2005, with reply due absent extension of time on or before 20 July, 2005;

- the application went abandoned after midnight 20 July, 2005;
- as a matter of record, the period for reply was extendable to 20 October, 2005;
- the Office mailed the Notice of Abandonment on 9 September, 2004;
- on 11 May, 2006, Petitioner filed the instant petition under 37 C.F.R. §1.137(a), a reply in the form of a request for continued examination (RCE) with fee and submission in the form of an amendment under 37 C.F.R. §1.114), and further alleged, *inter alia*, Applicant/Petitioner's (Petitioner) Counsel was a sole practitioner who apparently was diagnosed in early 2005 with a cancer that, about the time the final Office action was mailed, metastasized and Counsel thereafter was hospitalized and died before she was able to address the Office action in question and shortly after the application became abandoned due to that unavoidable delay (a copy of the death certificate, including the statement therein as to onset of illness) was included in the record;
- Petitioner's further showing in this matter approximates the requirements outlined at MPEP §711.03(c).

STATUTES, REGULATIONS AND ANALYSIS

Congress has authorized the Commissioner to "revive an application if the delay is shown to the satisfaction of the Commissioner to have been "unavoidable." 35 U.S.C. §133 (1994).[1]

The regulations at 37 C.F.R. §1.137(a) and (b) set forth the requirements for a petitioner to revive a previously unavoidably or unintentionally, respectively, abandoned application under this congressional grant of authority. The language of 35 U.S.C. §133 and 37 C.F.R. §1.137(a) is clear, unambiguous, and without qualification: the delay in tendering the reply to the outstanding Office action, as well as filing the first petition seeking revival, must have been unavoidable for the reply now to be accepted on petition.[2]

---

[1] 35 U.S.C. §133 provides:
35 U.S.C. §133 Time for prosecuting application.
Upon failure of the applicant to prosecute the application within six months after any action therein, of which notice has been given or mailed to the applicant, or within such shorter time, not less than thirty days, as fixed by the Commissioner in such action, the application shall be regarded as abandoned by the parties thereto, unless it be shown to the satisfaction of the Commissioner that such delay was unavoidable.

[2] Therefore, by example, an unavoidable delay in the payment of the Filing Fee might occur if a reply is shipped by the US Postal Service, but due to catastrophic accident, the delivery is not made.

Delays in responding properly raise the question whether delays are unavoidable.[3] Where there is a question whether the delay was unavoidable, Petitioners must meet the burden of establishing that the delay was unavoidable within the meaning of 35 U.S.C. §133 and 37 C.F.R. §1.137(a).[4] And the Petitioner must be diligent in attending to the matter.[5] Failure to do so does not constitute the care required under Pratt, and so cannot satisfy the test for diligence and due care.

(By contrast, unintentional delays are those that do not satisfy the very strict statutory and regulatory requirements of unavoidable delay, and also, by definition, are not intentional.[6]))

As to Allegations
of Unavoidable Delay

The requirements for a grantable petition under 37 C.F.R. §1.137(a) are the petition and fee, a showing of unavoidable delay, a proper reply, and–where appropriate--a terminal disclaimer and fee if the application was filed before 8 June, 1995.

Petitioner appears to have satisfied the regulatory requirements.

CONCLUSION

The petition under 37 C.F.R. §1.137(a) is **granted**.

The instant application is forwarded to Technology Center 3600 for further processing in due course.

---

[3] See: *Changes to Patent Practice and Procedure*; *Final Rule Notice*, 62 *Fed. Reg.* at 53158-59 (October 10, 1997), 1203 *Off. Gaz. Pat. Office* at 86-87 (October 21, 1997).

[4] See: In re Application of G, 11 USPQ2d 1378, 1380 (Comm'r Pats. 1989).

[5] See: Diligence in Filing Petitions to Revive and Petitions to Withdraw the Holding of Abandonment, 1124 Off. Gaz. Pat. Office 33 (March 19, 1991). It was and is Petitioner's burden to exercise diligence in seeking either to have the holding of abandonment withdrawn or the application revived. See 1124 Off. Gaz. Pat. Office supra.

[6] Therefore, by example, an unintentional delay in the reply might occur if the reply and transmittal form are to be prepared for shipment by the US Postal Service, but other pressing matters distract one's attention and the mail is not timely deposited for shipment.

Telephone inquiries concerning this decision may be directed to the undersigned at (571) 272-3214.

John J. Gillon, Jr.
Senior Attorney
Office of Petitions

UNITED STATES PATENT AND TRADEMARK OFFICE

Commissioner for Patents
United States Patent and Trademark Office
P. O. Box 1450
Alexandria, VA 22313-1450
www. uspto. gov

HESLIN ROTHENBERG FARLEY & MESITI P.C.
5 COLUMBIA CIRCLE
ALBANY, NY 12203

COPY MAILED

MAR 2 4 2005

OFFICE OF PETITIONS

In re Application of :
Carl E. Clark et al :
Application No. 10/387,652 :
Filed: March 13, 2003 :
Attorney Docket No. POU999044US2 :

ON PETITION

This is a decision on the petition under 37 CFR 1.137(b), filed March 15, 2005, to revive the above-identified application.

The petition is **GRANTED.**

The above-identified application became abandoned for failure to reply within the meaning of 37 CFR 1.113 in a timely manner to the final Office action mailed August 16, 2004, which set a shortened statutory period for reply of three (3) months. No extensions of time under the provisions of 37 CFR 1.136(a) were obtained. Accordingly, the above-identified application became abandoned on November 17, 2004.

The above-identified application is being revived solely for purposes of continuity with a Request For Continued Examination (RCE) filed on March 15, 2005.

Telephone inquiries concerning this decision should be directed to Irvin Dingle at (571) 272-3210.

This matter is being forwarded to Technology Center AU 2143 for further processing.

Irvin Dingle
Petitions Examiner
Office of Petitions
Office of the Deputy Commissioner
for Patent Examination Policy

UNITED STATES PATENT AND TRADEMARK OFFICE

COMMISSIONER FOR PATENTS
UNITED STATES PATENT AND TRADEMARK OFFICE
P.O. BOX 1450
ALEXANDRIA, VA 22313-1450
www.uspto.gov

Paper No. 4

BRENT DE RUYTER
790 COPPERTREE COURT
SIMI VALLEY, CA 93065

COPY MAILED

SEP 17 2003

OFFICE OF PETITIONS

In re Application of :
De Ruyter, et al. :
Application No. 10/387,662 :
Filed: March 14, 2003 :
Title: SOLAR POWERED SIGN LIGHT :

ON PETITION

This is a decision on the petition under 37 CFR 1.137(b), filed August 1, 2003, to revive the above-identified application.

The petition is **GRANTED**.

The above-identified application became abandoned for failure to reply in a timely manner to the Notice to File Corrected Application Papers (Notice) mailed May 21, 2003. The Notice set a period for reply of two (2) months from the mail date of the Notice. No extensions of time under the provisions of 37 CFR 1.136(a) were obtained. Accordingly, the above-identified application became abandoned on July 22, 2003.

The statement of unintentional delay presented in the petition does not comply with the current rule. Effective December 1, 1997, 37 CFR 1.137(b)(3) requires a statement that "the entire delay in filing the required reply from the due date for the reply until the filing of a grantable petition pursuant to 37 CFR 1.137(b) was unintentional" be submitted. However, the statement presented will be accepted and construed as meaning that "the entire delay in filing the required reply from the due date for the reply until the filing of a grantable petition pursuant to 37 CFR 1.137(b) was unintentional." If this is an incorrect interpretation in view of the rules, petitioner is required to provide a statement to that effect.

The file is being forwarded to the Office of Initial Patent Examination for further processing.

Telephone inquiries concerning this matter may be directed to the undersigned at (703) 306-9200.

Edward J. Tannouse
Petitions Attorney
Office of Petitions
United States Patent and Trademark Office

UNITED STATES PATENT AND TRADEMARK OFFICE

Commissioner for Patents
United States Patent and Trademark Office
P.O. Box 1450
Alexandria, VA 22313-1450
www.uspto.gov

GREENBERG TRAURIG LLP
2450 COLORADO AVENUE, SUITE 400E
SANTA MONICA, CA 90404

COPY MAILED

NOV 17 2004

OFFICE OF PETITIONS

In re Application of	:
Gary S. Kochamba	:
Application No. 10/387,664	: DECISION ON PETITION
Filed: March 12, 2003	: UNDER 37 CFR 1.78(a)(3)
Attorney Docket No. 58138-010700	:

This is a decision on the petition under 37 CFR 1.78(a)(3), filed September 22, 2004, to accept an unintentionally delayed claim under 35 U.S.C. § 120 for the benefit of priority to the prior-filed nonprovisional applications set forth in the amendment filed concurrently with the instant petition.

The petition is **GRANTED**.

A petition for acceptance of a claim for late priority under 37 CFR 1.78(a)(3) is only applicable to those applications filed on or after November 29, 2000. Further, the petition is appropriate only after the expiration of the period specified in 37 CFR 1.78(a)(2)(ii). In addition, the petition under 37 CFR 1.78(a)(3) must be accompanied by:

(1) the reference required by 35 U.S.C. § 120 and 37 CFR 1.78(a)(2)(i) of the prior-filed application, unless previously submitted;
(2) the surcharge set forth in § 1.17(t); and
(3) a statement that the entire delay between the date the claim was due under 37 CFR 1.78(a)(2)(ii) and the date the claim was filed was unintentional. The Commissioner may require additional information where there is a question whether the delay was unintentional.

The instant pending application was filed on March 12, 2003, and was pending at the time of filing of the instant petition. A reference to the prior-filed nonprovisional applications has been included in an amendment to the first sentence of the specification following the title, as required by 37 CFR 1.78(a)(2)(iii).

The instant nonprovisional application was filed after November 29, 2000, and the claim herein for the benefit of priority to the prior-filed nonprovisional applications is submitted after expiration of the period specified in 37 CFR 1.78(a)(2)(ii). Also, the reference to the prior-filed nonprovisional applications was submitted during the pendency of the instant nonprovisional application, for which the claim for benefit of priority is sought. *See* 35 U.S.C. § 120. Accordingly, having found that the instant petition for acceptance of an unintentionally delayed claim for the benefit of priority under 35 U.S.C. § 120 to the prior-filed nonprovisional applications satisfies the conditions of 37 CFR 1.78(a)(3), the petition is granted.

The granting of the petition to accept the delayed benefit claim to the prior-filed applications under 37 CFR 1.78(a)(3) should not be construed as meaning that the instant application is entitled to the benefit of the prior-filed applications. In order for the instant application to be entitled to the benefit of the prior-filed applications, all other requirements under 35 U.S.C. § 120 and 37 CFR 1.78(a)(1) and (a)(2) must be met. Similarly, the fact that the corrected Filing Receipt accompanying this decision on petition includes the prior-filed applications should not be construed as meaning that applicant is entitled to the claim for benefit of priority to the prior-filed applications noted thereon. Accordingly, the examiner will, in due course, consider this benefit claim and determine whether the instant application is entitled to the benefit of the earlier filing date.

A corrected Filing Receipt, which includes the priority claim to the prior-filed nonprovisional applications, accompanies this decision on petition.

Any inquiries concerning this decision may be directed to the undersigned at (571) 272-3218.

This application is being forwarded to Technology Center Art Unit 3736 for processing the Request for Continued Examination and appropriate action on the amendment filed September 22, 2004, including consideration by the examiner of applicant's entitlement to claim benefit of priority under 35 U.S.C. § 120 to the prior-filed nonprovisional applications.

Frances Hicks

Frances Hicks
Petitions Examiner
Office of Petitions
Office of the Deputy Commissioner
for Patent Examination Policy

ATTACHMENT: Corrected Filing Receipt

UNITED STATES PATENT AND TRADEMARK OFFICE

Commissioner for Patents
United States Patent and Trademark Office
P.O. Box 1450
Alexandria, VA 22313-1450
www.uspto.gov

GREENBERG TRAURIG
2450 COLORADO AVENUE
SUITE 400E
SANTA MONICA, CA 90404

COPY MAILED

DEC 0 8 2004

OFFICE OF PETITIONS

In re Application of	:
Gary S. Kochamba	:
Application No. 10/387,669	: DECISION ON PETITION
Filed: March 12, 2003	: UNDER 37 CFR 1.78(a)(3)
Attorney Docket No. 58138-010600	:

This is a decision on the petition under 37 CFR 1.78(a)(3), filed September 22, 2004, to accept an unintentionally delayed claim under 35 U.S.C. § 120 for the benefit of priority to the prior-filed nonprovisional applications, the amendment of which is embodied in the instant petition.[1]

The petition is **GRANTED**.

A petition for acceptance of a claim for late priority under 37 CFR 1.78(a)(3) is only applicable to those applications filed on or after November 29, 2000. Further, the petition is appropriate only after the expiration of the period specified in 37 CFR 1.78(a)(2)(ii). In addition, the petition under 37 CFR 1.78(a)(3) must be accompanied by:

(1) the reference required by 35 U.S.C. § 120 and 37 CFR 1.78(a)(2)(i) of the prior-filed application, unless previously submitted;
(2) the surcharge set forth in § 1.17(t); and
(3) a statement that the entire delay between the date the claim was due under 37 CFR 1.78(a)(2)(ii) and the date the claim was filed was unintentional. The Commissioner may require additional information where there is a question whether the delay was unintentional.

The instant pending application was filed on March 12, 2003, and was pending at the time of filing of the instant petition. A reference to the prior-filed nonprovisional applications has been included in an amendment to the first sentence of the specification following the title, as required

[1] Petitioner is advised that the amendment must be included in a separate paper, since different matters are handled by different branches of the Office. *Note* 37 CFR 1.4(c) and 37 CFR 1.121.

by 37 CFR 1.78(a)(2)(iii).

The instant nonprovisional application was filed after November 29, 2000, and the claim herein for the benefit of priority to the prior-filed nonprovisional applications is submitted after expiration of the period specified in 37 CFR 1.78(a)(2)(ii). Also, the reference to the prior-filed nonprovisional applications was submitted during the pendency of the instant nonprovisional application, for which the claim for benefit of priority is sought. *See* 35 U.S.C. § 120. Accordingly, having found that the instant petition for acceptance of an unintentionally delayed claim for the benefit of priority under 35 U.S.C. § 120 to the prior-filed nonprovisional applications satisfies the conditions of 37 CFR 1.78(a)(3), the petition is granted.

The granting of the petition to accept the delayed benefit claim to the prior-filed applications under 37 CFR 1.78(a)(3) should not be construed as meaning that the instant application is entitled to the benefit of the prior-filed applications. In order for the instant application to be entitled to the benefit of the prior-filed applications, all other requirements under 35 U.S.C. § 120 and 37 CFR 1.78(a)(1) and (a)(2) must be met. Similarly, the fact that the corrected Filing Receipt accompanying this decision on petition includes the prior-filed applications should not be construed as meaning that applicant is entitled to the claim for benefit of priority to the prior-filed applications noted thereon. Accordingly, the examiner will, in due course, consider this benefit claim and determine whether the instant application is entitled to the benefit of the earlier filing date.

A corrected Filing Receipt, which includes the priority claim to the prior-filed nonprovisional applications, accompanies this decision on petition.

Any inquiries concerning this decision may be directed to Wan Laymon at (571) 272-3220.

This matter is being referred to Technology Center Art Unit 3736 for appropriate action on the amendment filed September 22, 2004, including consideration by the examiner of applicant's entitlement to claim benefit of priority under 35 U.S.C. § 120 to the prior-filed nonprovisional applications.

Frances Hicks

Frances Hicks
Lead Petitions Examiner
Office of Petitions
Office of the Deputy Commissioner
for Patent Examination Policy

ATTACHMENT: Corrected Filing Receipt

UNITED STATES PATENT AND TRADEMARK OFFICE

Commissioner for Patents
United States Patent and Trademark Office
P.O. Box 1450
Alexandria, VA 22313-1450
www.uspto.gov

MARVIN H. KLEINBERG
KLEINBERG & LERNER, LLP
SUITE 1080
2049 CENTURY PARK EAST
LOS ANGELES, CA 90067

COPY MAILED

JAN 08 2008

OFFICE OF PETITIONS

In re Application of :
Songqiao LIU :
Application No. 10/387,683 :
Filed: March 12, 2003 :
Attorney Docket No. 457010.14586 :

DECISION ON PETITION

This is a decision on the petition under 37 CFR 1.137(b), filed November 09, 2007, to revive the above-identified application.

The petition is **GRANTED**.

The application became abandoned for failure to reply in a timely manner to the non-final Office action mailed, June 09, 2006, which set a shortened statutory period for reply of three (3) months. No extensions of time under the provisions of 37 CFR 1.136(a) was obtained. Accordingly, the application became abandoned on September 12, 2006.

The petition satisfies the conditions for revival pursuant to the provisions of 37 CFR 1.137(b) in that (1) the reply in the form of an amendment; (2) the petition fee $770; and (3) the required statement of unintentional delay have been received. Accordingly, the reply to the non-final Office action of June 09, 2006 is accepted as having been unintentionally delayed.

Telephone inquiries concerning this decision should be directed to the undersigned at (571) 272-4231.

The application file is being referred to Technology Center AU 2179 for appropriate action on the concurrently filed amendment.

Michelle R. Eason

Michelle R. Eason
Paralegal Specialist
Office of Petitions

SPE RESPONSE FOR CERTIFICATE OF CORRECTION

Paper No.: ____

DATE : 8/8/05

TO SPE OF : ART UNIT 1626

SUBJECT : Request for Certificate of Correction on Patent No.: 6822384 B2

A response is requested with respect to the accompanying request for a certificate of correction.

Please complete this form and return with file, within **7** days to:
Palm location **7580, Certificates of Correction Branch – South Tower – 9A22**
If response is for an IFW, **return to employee (named below) via PUBSCofC Team in MADRAS.**
With respect to the change(s) requested, correcting Office and/or Applicant's errors, should the patent read as shown in the certificate of correction (COCIN)? No new matter should be introduced, nor should the scope or meaning of the claims be changed.

Virginia Tolbert

Thank You For Your Assistance

Certificates of Correction Branch
Tel. No. 703-308-9390 ext. 113

The request for issuing the above-identified correction(s) is hereby:
Note your decision on the appropriate box.

- ☒ **Approved** — **All** changes apply.
- ☐ **Approved in Part** — Specify below which changes **do not** apply.
- ☐ **Denied** — State the reasons for denial below.

Comments:

DEBORAH C. LAMBLIN
PRIMARY EXAMINER

SPE **Art Unit**

UNITED STATES PATENT AND TRADEMARK OFFICE

COMMISSIONER FOR PATENTS
UNITED STATES PATENT AND TRADEMARK OFFICE
P.O. BOX 1450
ALEXANDRIA, VA 22313-1450
www.uspto.gov

JJGJR.: 09-04

Paper No: __

Yi Hui Chen
P.O. Box 10-69
Chong-Ho
Taipei 235 TW
TAIWAN

COPY MAILED

SEP 17 2004

OFFICE OF PETITIONS

In re Application of
Chen, et al :
Application No. 10/387,720 : ON PETITION
Filed: 11 March, 2003 :
Attorney Docket No. 1446AAB :

This is a decision on the petition filed on 29 August, 2004, under 37 C.F.R. §1.137(b), to revive the instant application as abandoned due to unintentional delay.

The petition under 37 C.F.R. §1.137(b) is **GRANTED**.

BACKGROUND

The record indicates:

- Petitioner failed to respond timely to the Notice of Allowance and Fees due mailed on 2 February, 2004, with reply due under a non-extendable deadline on or before Monday, 3 May, 2004;
- the instant application went abandoned after midnight 3 May, 2004;
- Notice of Abandonment was mailed on 30 June, 2004;
- Petitioner has filed a reply in the form of the payment of the Publication and Issue Fees, made the statement of unintentional delay, and filed the petition (and fee) for relief under

37 C.F.R. §1.137(b).

Thus, Petitioner has satisfied the requirements of the regulations at 37 C.F.R. §1.137(b).

STATUTES, REGULATIONS AND ANALYSIS

Congress has authorized the Commissioner to "revive an application if the delay is shown to the satisfaction of the Commissioner to have been "unavoidable." 35 U.S.C. §133 (1994).[1]

The regulations at 37 C.F.R. §1.137(a) and (b) set forth the requirements for a petitioner to revive a previously unavoidably or unintentionally, respectively, abandoned application under this congressional grant of authority. The language of 35 U.S.C. §133 and 37 C.F.R. §1.137(a) is clear, unambiguous, and without qualification: the delay in tendering the reply to the outstanding Office action, as well as filing the first petition seeking revival, must have been unavoidable for the reply now to be accepted on petition.[2]

Delays in responding properly raise the question whether delays are unavoidable.[3] Where there is a question whether the delay was unavoidable, Petitioners must meet the burden of establishing that the delay was unavoidable within the meaning of 35 U.S.C. §133 and 37 C.F.R. §1.137(a).[4] And the Petitioner must be diligent in attending to the matter.[5] Failure to do so does not constitute the care required under Pratt, and so cannot satisfy the test for diligence and due care.

By contrast, unintentional delays are those that do not satisfy the very strict statutory and regulatory requirements of unavoidable delay, and also, by definition, are not intentional.[6]

---

[1] 35 U.S.C. §133 provides:
35 U.S.C. §133 Time for prosecuting application.
Upon failure of the applicant to prosecute the application within six months after any action therein, of which notice has been given or mailed to the applicant, or within such shorter time, not less than thirty days, as fixed by the Commissioner in such action, the application shall be regarded as abandoned by the parties thereto, unless it be shown to the satisfaction of the Commissioner that such delay was unavoidable.

[2] Therefore, by example, an unavoidable delay in the payment of the Filing Fee might occur if a reply is shipped by the US Postal Service, but due to catastrophic accident, the delivery is not made.

[3] See: *Changes to Patent Practice and Procedure; Final Rule Notice*, 62 *Fed. Reg.* at 53158-59 (October 10, 1997), 1203 *Off. Gaz. Pat. Office* at 86-87 (October 21, 1997).

[4] See: In re Application of G, 11 USPQ2d 1378, 1380 (Comm'r Pats. 1989).

[5] See: Diligence in Filing Petitions to Revive and Petitions to Withdraw the Holding of Abandonment, 1124 Off. Gaz. Pat. Office 33 (March 19, 1991). It was and is Petitioner's burden to exercise diligence in seeking either to have the holding of abandonment withdrawn or the application revived. See 1124 Off. Gaz. Pat. Office supra.

[6] Therefore, by example, an unintentional delay in the reply might occur if the reply and transmittal form are to be prepared for shipment by the US Postal Service, but other pressing matters distract one's attention and the mail is not timely deposited for shipment.

CONCLUSION

Petitioner has satisfied the regulatory requirement, and, thus, the petition under 37 C.F.R. §1.137(b) hereby is **granted**.

This application is being forwarded to Publications Branch to be processed into a patent in due course.

Telephone inquiries concerning this decision may be directed to the undersigned at (703) 305-9199.

John J. Gillon, Jr.
Senior Attorney
Office of Petitions

UNITED STATES PATENT AND TRADEMARK OFFICE

COMMISSIONER FOR PATENTS
UNITED STATES PATENT AND TRADEMARK OFFICE
P.O. BOX 1450
ALEXANDRIA, VA 22313-1450
WWW.USPTO.GOV

Paper No. 3

GREENBERG TRAURIG LLP
2450 COLORADO AVENUE
SUITE 400E
SANTA MONICA, CA 90404

COPY MAILED

MAY 23 2003

OFFICE OF PETITIONS

In re Application of
Kochamba
Application No. 10/387,745
Filed: March 12, 2003
Attorney Docket No. 58138-010500

ON PETITION

This decision concerns the May 6, 2003 "Petition to Correct Filing Date" which is being properly treated as a petition under 37 CFR 1.10(c).

The petition is **GRANTED**.

The petition requests a filing date of March 12, 2003 rather than the presently accorded filing date of March 13, 2003, on the basis that the application was deposited on March 12, 2003 in the U.S. Postal Service (USPS) "Express Mail Post Office to Addressee" service pursuant to the requirements of 37 CFR 1.10. The petition is accompanied by a copy of the "Express Mail" mailing label bearing the number "EV125830465US" and containing a "date-in" of March 12, 2003. The same number also appears on the application transmittal which itemizes the application papers being mailed on that date. In addition, the Office has verified through the official USPS website, www.usps.gov (Track & Confirm), that the package mailed under this label had been accepted by the USPS on March 12, 2003 at 5:57 pm. The petition is thus granted.

No petition fee is owed.

The application file is being returned to the Office of Initial Patent Examination for correcting the filing date to March 12, 2003, and for mailing a corrected filing receipt reflecting that filing date. Upon competition of the pre-examination process, the application file will be forwarded to the appropriate Technology Center for examination in due course.

Telephone inquiries should be directed to the undersigned at (703) 308-0763.

RC Tang
Petitions Attorney
Office of Petitions

UNITED STATES PATENT AND TRADEMARK OFFICE

Commissioner for Patents
United States Patent and Trademark Office
P.O. Box 1450
Alexandria, VA 22313-1450
www.uspto.gov

GREENBERG TRAURIG, LLP
2450 COLORADO AVENUE
SUITE 400
SANTA MONICA CA 90404

COPY MAILED

NOV 17 2004

OFFICE OF PETITIONS

In re Application of
Gary S. Kochamba
Application No. 10/387,745
Filed: March 12, 2003
Attorney Docket No. 58138-010500

: DECISION ON PETITION
: UNDER 37 CFR 1.78(a)(3)

This is a decision on the petition under 37 CFR 1.78(a)(3), filed September 22, 2004, to accept an unintentionally delayed claim under 35 U.S.C. § 120 for the benefit of priority to the prior-filed nonprovisional applications set forth in the amendment filed concurrently with the instant petition.

The petition is **GRANTED**.

A petition for acceptance of a claim for late priority under 37 CFR 1.78(a)(3) is only applicable to those applications filed on or after November 29, 2000. Further, the petition is appropriate only after the expiration of the period specified in 37 CFR 1.78(a)(2)(ii). In addition, the petition under 37 CFR 1.78(a)(3) must be accompanied by:

> **(1)** the reference required by 35 U.S.C. § 120 and 37 CFR 1.78(a)(2)(i) of the prior-filed application, unless previously submitted;[1]
> **(2)** the surcharge set forth in § 1.17(t); and
> **(3)** a statement that the entire delay between the date the claim was due under 37 CFR 1.78(a)(2)(ii) and the date the claim was filed was unintentional. The Commissioner may require additional information where there is a question whether the delay was unintentional.

---

[1] Any nonprovisional application or international application designating the United States of America claiming the benefit of one or more prior-filed copending applications or international applications designating the United States of America must contain or be amended to contain a reference (amendment to the first line of the specification following the title or in an application data sheet (ADS) to each such prior-filed application, identifying it by application number (consisting of the series code and serial number) or international application number and international filing date filing date and indicating the relationship of the applications. Cross references to other related applications may be made when appropriate (*see* § 1.14).

The instant pending application was filed on March 12, 2003, and was pending at the time of filing of the instant petition. A reference to the prior-filed nonprovisional applications has been included in an amendment as required by 37 CFR 1.78(a)(2)(iii).

The instant nonprovisional application was filed after November 29, 2000, and the claim herein for the benefit of priority to the prior-filed nonprovisional applications is submitted after expiration of the period specified in 37 CFR 1.78(a)(2)(ii). Also, the reference to the prior-filed nonprovisional applications was submitted during the pendency of the instant nonprovisional application, for which the claim for benefit of priority is sought. *See* 35 U.S.C. § 120. Accordingly, having found that the instant petition for acceptance of an unintentionally delayed claim for the benefit of priority under 35 U.S.C. § 120 to the prior-filed nonprovisional applications satisfies the conditions of 37 CFR 1.78(a)(3), the petition is granted.

The granting of the petition to accept the delayed benefit claim to the prior-filed applications under 37 CFR 1.78(a)(3) should not be construed as meaning that the instant application is entitled to the benefit of the prior-filed applications. In order for the instant application to be entitled to the benefit of the prior-filed applications, all other requirements under 35 U.S.C. § 120 and 37 CFR 1.78(a)(1) and (a)(2) must be met. Similarly, the fact that the corrected Filing Receipt accompanying this decision on petition includes the prior-filed applications should not be construed as meaning that applicant is entitled to the claim for benefit of priority to the prior-filed applications noted thereon. Accordingly, the examiner will, in due course, consider this benefit claim and determine whether the instant application is entitled to the benefit of the earlier filing date.

A corrected Filing Receipt, which includes the priority claim to the prior-filed nonprovisional applications, accompanies this decision on petition.

Any inquiries concerning this decision may be directed to the undersigned at (571) 272-3208.

This application is being referred to Technology Center Art Unit 3736 for consideration by the examiner of applicant's entitlement to claim benefit of priority under 35 U.S.C. § 120 to the prior-filed nonprovisional applications set forth in the amendment filed with the instant petition.

Karen Creasy

Karen Creasy
Petitions Examiner
Office of Petitions
Office of the Deputy Commissioner
for Patent Examination Policy

ATTACHMENT: Corrected Filing Receipt

UNITED STATES PATENT AND TRADEMARK OFFICE

COMMISSIONER FOR COMMISSIONER FOR PATENTS
UNITED STATES PATENT AND TRADEMARK OFFICE
P.O. BOX 1450
ALEXANDRIA, VA 22313-1450
www.uspto.gov

Paper No. 4

COPY MAILED

AUG 04 2003

OFFICE OF PETITIONS

MYERS BIGEL SIBLEY & SAJOVEC
PO BOX 37428
RALEIGH, NC 27627

In re Application of
Newgard et al.
Application No. 10/387,767
Filed: March 13, 2003
Attorney Docket Number: 5405.302
Title of Invention: METHODS AND COMPOSITIONS FOR MODULATING GLYCOGEN SYNTHESIS AND BREAKDOWN

DECISION GRANTING PETITION

This is a decision on the petition under 37 CFR 1.10 (c) filed on July 9, 2003, requesting that the above-identified application be accorded a filing date of March 13, 2003, rather than the presently accorded filing date of March 14, 2003.

Petitioner contends the application was deposited in Express Mail service on March 13, 2003. In support, petitioner supplied a copy of Express Mail receipt No. EV193585061US (the same Express Mail number found on the itemized transmittal sheet accompanying the original application papers located in the official file). A review of the United States Postal Service's Express Mail Information Database shows the Express Mail package was accepted by the United States Postal Service on March 13, 2003.

In view of the above, the petition is **Granted**. No petition fee is required and none has been charged.

The application is being forwarded to Office of Initial Patent Examination for correction of the filing date to **MARCH 13, 2003** and issuance of a corrected Filing Receipt.

Telephone inquiries specific to this matter should be directed to the undersigned at (703) 306-0251.

Charlema R. Grant
Petitions Attorney
Office of Petitions

UNITED STATES PATENT AND TRADEMARK OFFICE

COMMISSIONER FOR PATENTS
UNITED STATES PATENT AND TRADEMARK OFFICE
P.O. BOX 1450
ALEXANDRIA, VA 22313-1450
www.uspto.gov

Paper No. __

Trueman H. Denny III
UNITY SEMICONDUCTOR CORPORATION
250 North Wolfe Road
Sunnyvale CA 94085

MAILED

JUL 29 2005

REEXAM UNIT

In re Application of	: DECISION DISMISSING PETITION
Makoto Nagashima et al.	: FOR SUSPENSION OF RULES
Application No.10/387,773	: and
Filed: March 12, 2003	: REQUEST FOR PRE-BRIEF
Attorney Docket No. Unity 002	: APPEAL CONFERENCE

The above proceeding is before the Office of Patent Legal Administration for consideration of the July 18, 2005 petition by the applicant to suspend the rules pursuant to 37 CFR 1.183 and to grant a pre-appeal brief conference in the application proceedings. The concurrently filed Request for a Pre-Brief Appeal Conference shall also be treated by this decision.

REVIEW OF FACTS

1) Application 10/387,773 was filed on March 12, 2003.

2) A restriction requirement was mailed on August 13, 2003.

3) A response to the restriction requirement was received on September 15, 2003.

4) A non-final rejection was mailed on December 16, 2003.

5) A response to the non-final rejection was received on February 25, 2004.

6) A second non-final rejection was mailed on April 30, 2004.

7) A response to the second non-final rejection was received on July 2, 2004.

8) A third non-final rejection was mailed on September 9, 2004.

9) A response to the third non-final rejection was received on March 4, 2005.

10) A final rejection was mailed on April 26, 2005.

11) An amendment after final was received on June 8, 2005.

12)An advisory action was mailed on June 21, 2005.

13)A notice of appeal was received on June 28, 2005.

14)The instant petition entitled **Petition for Suspension of Rules per 37 C.F.R. § 1.183** and a request for a pre-brief conference were received on July 18, 2005.

DECISION DISMISSING THE PETITION FOR SUSPENSION OF RULES AS WELL AS THE REQUEST A PRE-BRIEF CONFERENCE

1) 37 CFR §1.183 provides that "[i]n an extraordinary situation, when justice requires, any requirement of the regulations in this part which is not a requirement of the statutes may be suspended or waived by the Director or the Director's designee, *sua sponte*, or on petition of the interested party, subject to such other requirements as may be imposed."

2) 37 CFR § 1.182 provides that "[a]ll situations not specifically provided for in the regulations of this part will be decided in accordance with the merits of each situation by or under the authority of the Director, subject to such other requirements as may be imposed, and such decision will be communicated to the interested parties in writing."

3) The petition seeks relief under the provisions of 37 CFR §1.183. The provisions for requesting a pre-brief conference, however, are provided only by way of a notice of a pilot program in the Patent Office Official Gazette, and are not provided, as yet, by the regulations. Accordingly, the present petition is treated as a petition under 37 CFR 1.182.

4) The Office fee records show payment of a petition fee of $130.

5) The Official Gazette notice concerning the pre-brief conference[1] states under the heading "Conditions Necessary to Request a Panel Review:" that "Applicant must file the request with the filing of a notice of appeal and before the filing of an appeal brief." Also, the notices states under the heading "Administrative Matters" that "A request filed after the date of receipt of the notice of appeal will be dismissed as untimely."

6) The notice of appeal was received on June 28, 2005 and the request for a pre-brief conference was received on July 18, 2005. Therefore, the request for a pre-brief conference was filed after the date of receipt of the notice of appeal, and accordingly is **DISMISSED** as untimely, consistent with the contents of the Official Gazette notice.

[1] New Pre-Appeal Brief Conference Pilot Program, 1296 Off. Gaz. Pat. Off. 67 (July 12, 2005)

7) The petition requests the Office to grant the conference request, in spite of the untimeliness of the request, because the notice of appeal was filed prior to the date of the notice in the Official Gazette. The Official Gazette notice is clear on the point that the request must accompany the notice of appeal. No provision for late submissions because of the date of the notice of appeal relative to the Official Gazette notice is indicated. Accordingly, the petition to grant the conference request in spite of the untimeliness of the request is **DISMISSED**.

CONCLUSION

1. The petition to grant a request for a pre-brief conference in the examination proceedings is **DISMISSED**.

2. The request for a pre-brief conference is **DISMISSED**.

3. The application No. 10/387,773 continues to proceed under notice of appeal. The time period for filing an appeal brief remains as set at two months from the date of notice of appeal.

4. Telephone inquiries related to this decision should be directed to Anton W. Fetting, Senior Legal Advisor, at (571) 272-7717.

Robert J. Spar, Director
Office of Patent Legal Administration
Office of Patent Examination Policy

UNITED STATES PATENT AND TRADEMARK OFFICE

Commissioner for Patents
United States Patent and Trademark Office
P.O. Box 1450
Alexandria, VA 22313-1450
www.uspto.gov

UNITY SEMICONDUCTOR CORPORATION
250 NORTH WOLFE ROAD
SUNNYVALE, CA 94085

COPY MAILED
MAY 19 2006
OFFICE OF PETITIONS

In re Application of	:	
Makoto Nagashima et al	:	
Application No. 10/387,773	:	ON PETITION
Filed: March 13, 2003	:	
Attorney Docket No. UNITY 002	:	

This is a decision on the petition under 37 CFR 1.137(b), filed January 13, 2006, to revive the above-identified application.

The petition is **GRANTED**.

The above-identified application became abandoned for failure to submit the issue fee/publication fee in a timely manner in reply to the Notice of Allowance mailed September 22, 2005, which set a statutory period for reply of three (3) months. Accordingly, the above-identified application became abandoned on December 23, 2005.

The petition satisfies the conditions for revival pursuant to the provisions of 37 CFR 1.137(b) in that (1) the reply in the form of the issue fee/publication fee; (2) the petition fee; and (3) the required statement of unintentionally delay have been received. Accordingly, the issue fee/publication fee are accepted as having been unintentional delayed.

Telephone inquiries concerning this decision should be directed to Wan Laymon at (571) 272-3220.

This application is being referred to Publishing Division.

Wan Laymon
Wan Laymon
Petitions Examiner
Office of Petitions

UNITED STATES PATENT AND TRADEMARK OFFICE

COMMISSIONER FOR PATENTS
UNITED STATES PATENT AND TRADEMARK OFFICE
P.O. BOX 1450
ALEXANDRIA, VA 22313-1450
www.uspto.gov

Document No. 3

PARK, VAUGHAN & FLEMING LLP
702 MARSHALL STREET
SUITE 310
REDWOOD CITY, CA 94063

COPY MAILED

JUL 21 2003

OFFICE OF PETITIONS

In re Application of
Skurikhin, et al.
Application No. 10/387,780
Filed: March 13, 2003
Attorney Docket No. OR02-22801

DECISION ON PETITION

This is a decision on the petition under 37 CFR 1.10(d) filed June 27, 2003

The petition is **dismissed.**

Any request for reconsideration of this decision must be submitted within TWO (2) MONTHS from the mail date of this decision. Extensions of time under 37 CFR 1.136(a) are permitted. The reconsideration request should include a cover letter entitled "Renewed Petition" under 37 CFR 1.10."

The instant petition was filed to correct what petitioner believed was an incorrect filing date accorded the above-cited application. Petitioner maintains that the correct filing date for the application should be March 12, 2003, not the currently accorded date of March 13, 2003. In support thereof, petitioner filed an a copy of Express Mail label, tracking number EV125787590 US with the date-in of March 13, 2003, and "Track and Confirm" print out showing the packages as being received by the United States Postal Service on March 13, 2003.

Section 1.10(d) of the Title 37 of the Code of Federal Regulations indicates if a showing is made that the "date-in" on the Express Mail label was incorrectly entered or omitted by the United States Postal Service, a petition to accord the correspondence a filing date as of the date the correspondence is shown to have been deposited with the United States Postal Service, provided that:

> (1) the petition is filed promptly after the person becomes aware that the Office has accorded or will accord a filing date based upon an incorrect entry by the USPS;
>
> (2) the number on the Express Mail mailing label was placed on a paper(s) or fee(s) that constitute the correspondence prior to the original mailing by Express Mail; and
>
> (3) the petition includes a showing which established, to the satisfaction of the Commissioner, that the requested filing date was the date the correspondence was deposited in the "Express Mail Post Office to Addressee" service prior to the last scheduled pickup for that day. Any showing pursuant to this paragraph must be

corroborated by evidence from the USPS or that came into being after deposit and within one business day of the deposit of the correspondence in the "Express Mail Post office to Addressee" service of the USPS.

The instant petition does not satisfy the requirements of item (3) above.

Relative to item (3) above, the evidence provided is unpersuasive in that both the Express Mail receipt and the "Track and Confirm" print out indicate that the package was received on March 12, 2003, and petitioner did not provide any other evidence from the USPS meeting the criteria above that the date-in was entered incorrectly. Petitioner must provide satisfactory evidence that meets the requirements of 37 CFR 1.10(d) before any renewed petition will be considered grantable.

Further correspondence with respect to this matter should be addressed as follows:

By mail: Mail Stop Petitions
PO Box 1450
Alexandria, VA 22313-1450

By facsimile: (703) 308-6916
Attn: Office of Petitions

By hand: Office of Petitions
2201 South Clark Place
Crystal Plaza 4, Suite 3C23
Arlington, VA 22202

Telephone inquiries concerning this decision should be directed to the undersigned at (703) 305-0010.

Kenya A. McLaughlin

Kenya A. McLaughlin
Petitions Examiner
Office of Petitions

UNITED STATES PATENT AND TRADEMARK OFFICE

Commissioner for Patents
United States Patent and Trademark Office
P.O. Box 1450
Alexandria, VA 22313-1450
www.uspto.gov

FLIESLER MEYER LLP
FOUR EMBARCADERO CENTER, SUITE 400
SAN FRANCISCO, CA 94111

COPY MAILED

DEC 14 2005

OFFICE OF PETITIONS

In re Application of	:
Fernando A. Zayas et al	:
Application No. 10/387,781	: DECISION GRANTING PETITION
Filed: March 13, 2003	: UNDER 37 CFR 1.313(c)(2)
Attorney Docket No. PANA-1006US2	:

This is a decision on the petition, filed December 12, 2005, under 37 CFR 1.313(c)(2) to withdraw the above-identified application from issue after payment of the issue fee.

The petition is **GRANTED**.

The above-identified application is withdrawn from issue for consideration of a submission under 37 CFR 1.114 (request for continued examination). See 37 CFR 1.313(c)(2).

Petitioner is advised that the issue fee paid on October 11, 2005 in the above-identified application cannot be refunded. If, however, the above-identified application is again allowed, petitioner may request that it be applied towards the issue fee required by the new Notice of Allowance.[1]

Telephone inquiries should be directed to the undersigned at (571) 272-3218.

This matter is being referred to Technology Center AU 2651 for processing of the request for continued examination under 37 CFR 1.114 and for consideration of an Information Disclosure Statement, both filed on December 5, 2005.

Frances Hicks
Petitions Examiner
Office of Petitions

---

[1] *The request to apply the issue fee to the new Notice may be satisfied by completing and returning the new Issue Fee Transmittal Form PTOL-85(b) (along with any balance due at the time of payment), which includes the following language thereon: "Commissioner for Patents is requested to apply the Issue Fee and Publication Fee (if any) or re-apply any previously paid issue fee to the application identified above." Petitioner is advised that, whether a fee is indicated as being due or not, the Issue Fee Transmittal Form* ***must*** *be completed and timely submitted to avoid abandonment. Note the language in bold text on the first page of the Notice of Allowance and Fee(s) Due (PTOL-85).*

UNITED STATES PATENT AND TRADEMARK OFFICE

COMMISSIONER FOR PATENTS
UNITED STATES PATENT AND TRADEMARK OFFICE
P.O. BOX 1450
ALEXANDRIA, VA 22313-1450
www.uspto.gov

FLIESLER MEYER, LLP
FOUR EMBARCADERO CENTER
SUITE 400
SAN FRANCISCO, CA 94111

COPY MAILED

DEC 1 3 2005

OFFICE OF PETITIONS

In re Application of
Fernando A. Zayas, et al.
Application No. 10/387,789
Filed: March 13, 2003
Attorney Docket No.: PANA 1006US1

ON PETITION

This is a decision on the petition, filed December 12, 2005, under 37 CFR 1.313(c)(2) to withdraw the above-identified application from issue after payment of the issue fee.

The petition is **GRANTED**.

The above-identified application is withdrawn from issue for consideration of a submission under 37 CFR 1.114 (request for continued examination). See 37 CFR 1.313(c)(2).

Petitioner is advised that the issue fee paid on September 15, 2005, in the above-identified application, cannot be refunded. If, however, the above-identified application is again allowed, petitioner may request that it be applied towards the issue fee required by the new Notice of Allowance.[1]

Telephone inquiries relating to this decision should be directed to the undersigned at (571) 272-3204.

The application is being referred to Technology Center AU 2651 for further processing of the request for continued examination under 37 CFR 1.114 filed December 5, 2005.

Sherry D. Brinkley
Petitions Examiner
Office of Petitions

[1]The request to apply the issue fee to the new Notice may be satisfied by completing and returning the new Issue Fee Transmittal Form PTOL-85(b), which includes the following language thereon: " Commissioner for Patents is requested to apply the Issue Fee and Publication Fee (if any) or re-apply any previously paid issue fee to the application identified above." Petitioner is advised that, whether a fee is indicated as being due or not, the Issue Fee Transmittal Form must be completed and timely submitted to avoid abandonment. Note the language in bold text on the first page of the Notice of Allowance and Fee(s) Due (PTOL-85).

UNITED STATES PATENT AND TRADEMARK OFFICE

Commissioner for Patents
United States Patent and Trademark Office
P.O. Box 1450
Alexandria, VA 22313-145

NOV - 8 2004

MAILED
NOV - 8 2004
OFFICE OF THE DIRECTOR
TC 3600

J. RODMAN STEELE, JR.
AKERMAN SENTERFITT
P.O. Box 3188
West Palm Beach, FL 33401

In re application of
John Stephen Middlebrook
Application No. 10/387,795 :
Filed: March 13, 2003 :
For: METHOD AND APPARATUS FOR THE CONTROL OF VERMIN :

DECISION ON REQUEST FOR WITHDRAWAL OF ATTORNEY

This is a decision on the request filed on September 24, 2004, under 37 CFR 1.36 and MPEP 402.06, requesting permission to withdraw as the attorney of record in the above-identified application.

The request is **NOT APPROVED**

Under 37 CFR 1.36 an attorney may withdraw only upon application to and approval by the Commissioner. It should be noted that a withdrawal is effective when approved, not when filed. Besides giving due notice to his or her client and delivering to the client all papers and property to which the client is entitled as specified under 37 CFR 10.40, approval of such a request requires that the following conditions be met:

A) Each attorney of record must sign the notice of withdrawal, or the notice must contain a clear indication of one attorney signing on behalf of another, because the Office does not recognize law firms;

B) A proper reason for the withdrawal as enumerated in 37 CFR 10.40(b) or subsection (1)-(6) of 37 CFR 10.40(c) must be provided; and

C) If withdrawal is requested in accordance with 37 CFR 10.40(c) above, there must be at least 30 days between approval of the withdrawal and the later of the expiration date of a time period for reply or the expiration date of the period which can be obtained by a petition and fee for extension of time under 37 CFR 1.136(a).

The request to withdraw as attorney is not accepted in the above-identified application because the request lacks condition A) and C) above.

As to condition A) There are currently 18 attorneys of record in this application. Each attorney must sign or a clear indication of one signing on behalf of the others is required. If only the attorney listed in the request are to have power withdrawn and the remaining attorneys are intended to remain having power of attorney for this case, this needs to be made clear in any supplemental request; otherwise the other attorneys, or a statement that all attorneys of record, would need to be added to the request.

As to condition C) there is no longer 30 days for the applicant to respond to the outstanding Office action mailed May 11, 2004.

Steven N. Meyers
Special Programs Examiner
Patent Technology Center 3600
(703) 308-3868

SNM/pav: 11/03/04

UNITED STATES PATENT AND TRADEMARK OFFICE

Commissioner for Patents
United States Patent and Trademark Office
P.O. Box 1450
Alexandria, VA 22313-1450
www.uspto.gov

DAVID L. FEHRMAN
MORRISON & FOERSTER, LLP
555 W. 5TH STREET
35TH FLOOR
LOS ANGELES, CA 90013

MAILED

FEB 27 2009

OFFICE OF PETITIONS

In re Application of	:	
Yoichiro Ogai	:	
Application No. 10/387,805	:	DECISION GRANTING PETITION
Filed: March 13, 2003	:	UNDER 37 CFR 1.313(c)(2)
Attorney Docket No. 393032036900	:	

This is a decision on the petition under 37 CFR 1.313(c)(2), filed February 26, 2009, to withdraw the above-identified application from issue after payment of the issue fee.

The petition is **GRANTED**.

The above-identified application is withdrawn from issue for consideration of a submission under 37 CFR 1.114 (request for continued examination). *See* 37 CFR 1.313(c)(2).

Petitioner is advised that the issue fee paid on July 31, 2008 cannot be refunded. If, however, this application is again allowed, petitioner may request that it be applied towards the issue fee required by the new Notice of Allowance.[1]

Telephone inquiries regarding this decision should be directed to undersigned at (571) 272-1642.

This application is being referred to Technology Center AU 3685 for processing of the request for continued examination under 37 CFR 1.114 and for consideration of the concurrently filed information disclosure statement.

/AMW/
April M. Wise
Petitions Examiner
Office of Petitions

---

[1] *The request to apply the issue fee to the new Notice may be satisfied by completing and returning the new Part B – Fee(s) Transmittal Form (along with any balance due at the time of submission). Petitioner is advised that the Issue Fee Transmittal Form must be completed and timely submitted to avoid abandonment of the application.*

SPE RESPONSE FOR CERTIFICATE OF CORRECTION

Paper No.: —

DATE : 1/11/05

TO SPE OF : ART UNIT 2818

SUBJECT : Request for Certificate of Correction on Patent No.: 6765825 B1

A response is requested with respect to the accompanying request for a certificate of correction.

Please complete this form and return with file, within **7** days to:
Certificates of Correction Branch - PK 3-915
Palm location **7580** - Tel. No. 305-8309

With respect to the change(s) requested, correcting Office and/or Applicant's errors, should the patent read as shown in the certificate of correction? No new matter should be introduced, nor should the scope or meaning of the claims be changed.

BEST AVAILABLE COPY

Virginia Tolbert

Thank You For Your Assistance

Certificates of Correction Branch

The request for issuing the above-identified correction(s) is hereby:
Note your decision on the appropriate box.

- ☑ **Approved** — All changes apply.
- ☐ **Approved in Part** — Specify below which changes **do not** apply.
- ☐ **Denied** — State the reasons for denial below.

Comments:

SPE

2818
Art Unit

UNITED STATES PATENT AND TRADEMARK OFFICE

Commissioner for Patents
United States Patent and Trademark Office
P.O. Box 1450
Alexandria, VA 22313-1450
www.uspto.gov

IBM RP-RPS
SAWYER LAW GROUP LLP
2465 E. BAYSHORE ROAD, SUITE NO. 406
PALO ALTO, CA 94303

COPY MAILED

DEC 3 0 2008

OFFICE OF PETITIONS

ON PETITION

In re Application of :
Claude Basso et al :
Application No. 10/387,847 :
Filed: March 13, 2003 :
Attorney Docket No. :
RPS920020120US1/2697P

This is a decision on the petition under the unintentional provisions of 37 CFR 1.137(b), filed November 21, 2008, to revive the above-identified application.

The petition is **GRANTED.**

The application became abandoned for failure to timely file a reply within the meaning of 37 CFR 1.113 to the final Office action of April 30, 2008. The proposed reply required for consideration of a petition to revive must be a Notice of Appeal (and appeal fee required by 37 CFR 41.20(b)(2), an amendment that prima facie places the application in condition for allowance, a Request for Continued Examination and submission (37 CFR 1.114), or the filing of a continuing application under 37 CFR 1.53(b). See MPEP 711.03(c)(III)(A)(2). No extension of time pursuant to the provisions of 37 CFR 1.136(a) was obtained. Accordingly, the date of abandonment of this application is July 31, 2008.

The petition satisfies the requirements of 37 CFR 1.137(b) in that petitioner has supplied (1) the reply in the form of a Request for Continued Examination (RCE) and fee of $810 and the submission required by 37 CFR 1.114; (2) the petition fee of $1620; and (3) a proper statement of unintentional delay.

Telephone inquiries concerning this decision should be directed to the undersigned at (571) 272-3210.

This application is being referred to Technology Center AU 2419 for processing of the RCE and for appropriate action by the Examiner in the normal course of business on the amendment submitted in accordance with 37 CFR 1.114.

Irvin Dingle
Petition Examiner
Office of Petitions

UNITED STATES PATENT AND TRADEMARK OFFICE

UNITED STATES DEPARTMENT OF COMMERCE
United States Patent and Trademark Office
Address: COMMISSIONER FOR PATENTS
P.O. Box 1450
Alexandria, Virginia 22313-1450
www.uspto.gov

APPL NO.	FILING OR 371 (c) DATE	ART UNIT	FIL FEE REC'D	ATTY.DOCKET NO	DRAWINGS	TOT CLMS	IND CLMS
10/387,851	03/13/2003	2878	1002	11913-115	31	34	2

CONFIRMATION NO. 7764

CORRECTED FILING RECEIPT

OC000000011060431

26486
PERKINS, SMITH & COHEN LLP
ONE BEACON STREET
30TH FLOOR
BOSTON, MA 02108

Date Mailed: 10/20/2003

Receipt is acknowledged of this regular Patent Application. It will be considered in its order and you will be notified as to the results of the examination. Be sure to provide the U.S. APPLICATION NUMBER, FILING DATE, NAME OF APPLICANT, and TITLE OF INVENTION when inquiring about this application. Fees transmitted by check or draft are subject to collection. Please verify the accuracy of the data presented on this receipt. **If an error is noted on this Filing Receipt, please write to the Office of Initial Patent Examination's Filing Receipt Corrections, facsimile number 703-746-9195. Please provide a copy of this Filing Receipt with the changes noted thereon. If you received a "Notice to File Missing Parts" for this application, please submit any corrections to this Filing Receipt with your reply to the Notice. When the USPTO processes the reply to the Notice, the USPTO will generate another Filing Receipt incorporating the requested corrections (if appropriate).**

Applicant(s)

Michael D. Tocci, Sandia Park, NM;
Nora C. Tocci, Sandia Park, NM;
Gregory C. Mooradian, San Diego, CA;

Assignment For Published Patent Application

Science & Engineering Associates, Inc.;

D mestic Priority data as claimed by applicant

This appln claims benefit of 60/363,997 03/14/2002

Foreign Applications

If Required, Foreign Filing License Granted: 05/06/2003

Projected Publication Date: Not Applicable

Non-Publication Request: No

Early Publication Request: No

Title

Multiple imaging system and method for designing same

Preliminary Class
250

LICENSE FOR FOREIGN FILING UNDER
Title 35, United States Code, Section 184
Title 37, Code of Federal Regulations, 5.11 & 5.15

GRANTED

The applicant has been granted a license under 35 U.S.C. 184, if the phrase "IF REQUIRED, FOREIGN FILING LICENSE GRANTED" followed by a date appears on this form. Such licenses are issued in all applications where the conditions for issuance of a license have been met, regardless of whether or not a license may be required as set forth in 37 CFR 5.15. The scope and limitations of this license are set forth in 37 CFR 5.15(a) unless an earlier license has been issued under 37 CFR 5.15(b). The license is subject to revocation upon written notification. The date indicated is the effective date of the license, unless an earlier license of similar scope has been granted under 37 CFR 5.13 or 5.14.

This license is to be retained by the licensee and may be used at any time on or after the effective date thereof unless it is revoked. This license is automatically transferred to any related applications(s) filed under 37 CFR 1.53(d). This license is not retroactive.

The grant of a license does not in any way lessen the responsibility of a licensee for the security of the subject matter as imposed by any Government contract or the provisions of existing laws relating to espionage and the national security or the export of technical data. Licensees should apprise themselves of current regulations especially with respect to certain countries, of other agencies, particularly the Office of Defense Trade Controls, Department of State (with respect to Arms, Munitions and Implements of War (22 CFR 121-128)); the Office of Export Administration, Department of Commerce (15 CFR 370.10 (j)); the Office of Foreign Assets Control, Department of Treasury (31 CFR Parts 500+) and the Department of Energy.

NOT GRANTED

No license under 35 U.S.C. 184 has been granted at this time, if the phrase "IF REQUIRED, FOREIGN FILING LICENSE GRANTED" DOES NOT appear on this form. Applicant may still petition for a license under 37 CFR 5.12, if a license is desired before the expiration of 6 months from the filing date of the application. If 6 months has lapsed from the filing date of this application and the licensee has not received any indication of a secrecy order under 35 U.S.C. 181, the licensee may foreign file the application pursuant to 37 CFR 5.15(b).

UNITED STATES PATENT AND TRADEMARK OFFICE

Commissioner for Patents
United States Patent and Trademark Office
P.O. Box 1450
Alexandria, VA 22313-1450
www.uspto.gov

THOMPSON E. FEHR
GOLDENWEST CORPORATE CENTER
SUITE 300
5025 ADAMS AVENUE
OGDEN UT 84403

MAILED

JUL 19 2010

OFFICE OF PETITIONS

In re Application of	:	
Douglas K. BEPLATE	:	
Application No. 10/387,854	:	DECISION ON PETITION
Filed: March 13, 2003	:	
Attorney Docket No. **PBEPHN**	:	

This is a decision on the petition under the unintentional provisions of 37 CFR 1.137(b), filed June 12, 2009, to revive the above-identified application.

The petition is **GRANTED**.

This application became abandoned as a result of petitioner's failure to file an appeal brief (and fee required by 37 CFR 41.20(b)(2)) within the time period provided in 37 CFR 41.37(a)(1). As an appeal brief (and appeal brief fee) was not filed within two (2) months of the Notice of Appeal filed June 09, 2008, and no extensions of time under the provisions of 37 CFR 1.136(a) were obtained, the appeal was dismissed and the proceedings as to the rejected claims were terminated. See 37 CFR 1.197(b). As no claim was allowed, the application became abandoned on August 09, 2008. See MPEP 1215.04.

The petition satisfies the requirements of 37 CFR 1.137(b) in that petitioner has supplied (1) the reply in the form of an Appeal Brief, (2) the petition fee of $810, and (3) a proper statement of unintentional delay.

Telephone inquiries concerning this decision should be directed to Tredelle Jackson at (571) 272-2783.

This application is being referred to Technology Center AU 1797 for appropriate action by the Examiner in the normal course of business on the reply received.

Ramesh Krishnamurthy

Ramesh Krishnamurthy
Petitions Examiner
Office of Petitions

UNITED STATES PATENT AND TRADEMARK OFFICE

Commissioner for Patents
United States Patent and Trademark Office
P.O. Box 1450
Alexandria, VA 22313-1450
www.uspto.gov

TEXAS INSTRUMENTS INCORPORATED
P O BOX 655474, M/S 3999
DALLAS TX 75265

COPY MAILED

OCT 05 2007

OFFICE OF PETITIONS

In re Application of
GIBONG JEONG
Application No. 10/387,876
Filed: 03/13/2003
Attorney Docket No. TI-34292

DECISION ON PETITION

This is a decision on the petition under the unintentional provisions of 37 CFR 1.137(b), filed May 3, 2007, to revive the above-identified application.

The petition is **GRANTED**.

The application became abandoned for failure to reply in a timely manner to the non-final Office action, mailed September 29, 2006, which set a shortened statutory period for reply of three (3) months. No extensions of time under the provisions of 37 CFR 1.136(a) were obtained. Accordingly, the application became abandoned on December 30, 2006.

The petition satisfies the requirements of 37 CFR 1.137(b) in that petitioner has supplied (1) the reply in the form of an amendment, (2) the petition fee, and (3) an adequate statement of unintentional delay.

37 CFR 1.137(b)(3) requires a statement that "the entire delay in filing the required reply from the due date for the reply until the filing of a grantable petition pursuant to this paragraph was unintentional" be submitted. However, the statement presented will be accepted and construed as the statement required by 37 CFR 1.137(b)(3). Petitioner must notify the Office if this is not a correct interpretation of the statement contained in the present petition.

Telephone inquiries concerning this decision should be directed to the undersigned at (571) 272-3211.

This application is being referred to Technology Center AU 2611 for appropriate action by the Examiner in the normal course of business on the reply received on May 3, 2007.

Christina Tartera Donnell

Christina Tartera Donnell
Senior Petitions Attorney
Office of Petitions

UNITED STATES PATENT AND TRADEMARK OFFICE

Commissioner for Patents
United States Patent and Trademark Office
P.O. Box 1450
Alexandria, VA 22313-1450
www.uspto.gov

LARSON & ASSOCIATES
221 EAST CHURCH STREET
FREDERICK MD 21701-5405

COPY MAILED

MAY 23 2005

OFFICE OF PETITIONS

ON PETITION

In re Application of	:
Ralph E. Busch et al	:
Application No. 10/387,881	:
Filed: March 13, 2003	:
Attorney Docket No. 02-SNX-01	:

This is a decision on the petition, filed May 20, 2005, under 37 CFR 1.313(c)(2) to withdraw the above-identified application from issue after payment of the issue fee.

The petition is **GRANTED**.

The above-identified application is withdrawn from issue for consideration of a submission under 37 CFR 1.114 (request for continued examination). See 37 CFR 1.313(c)(2).

Petitioner is advised that the issue fee paid on April 13, 2005 in the above-identified application cannot be refunded. If, however, the above-identified application is again allowed, petitioner may request that it be applied towards the issue fee required by the new Notice of Allowance.[1]

Telephone inquiries should be directed to the undersigned at (571) 272-3208.

The examiner of Technology Center AU 2856 will consider the request for continued examination under 37 CFR 1.114.

Karen Creasy

Karen Creasy
Petitions Examiner
Office of Petitions
Office of the Deputy Commissioner
for Patent Examination Policy

---

[1] The request to apply the issue fee to the new Notice may be satisfied by completing and returning the new Issue Fee Transmittal Form PTOL-85(b), which includes the following language thereon: "Commissioner for Patents is requested to apply the Issue Fee and Publication Fee (if any) or re-apply any previously paid issue fee to the application identified above." Petitioner is advised that, whether a fee is indicated as being due or not, the Issue Fee Transmittal Form **must** be completed and timely submitted to avoid abandonment. Note the language in bold text on the first page of the Notice of Allowance and Fee(s) Due (PTOL-85).

UNITED STATES PATENT AND TRADEMARK OFFICE

COMMISSIONER FOR PATENTS
UNITED STATES PATENT AND TRADEMARK OFFICE
P.O. BOX 1450
ALEXANDRIA, VA 22313-1450
www.uspto.gov

Paper No. _____

Date : May 23, 2005

TO : Director, Office of Patent Publication

FROM : Office of the Deputy Commissioner
for Patent Examination Policy

SUBJECT : Withdrawal from Issue of

Applicant(s) :Ralph E. Busch et al
Application No. :10/387,881
Filed :March 13, 2003

The above-identified application has been assigned Patent No. 6,895,821 and an issue date of May 24, 2005.

It is hereby directed that this application be withdrawn from issue at the request of the applicant.

Do not refund the issue fee.

The following erratum should be published in the Official Gazette if the above-identified application is published in the OG of May 24, 2005:

"All reference to Patent No. 6,895,821 to Ralph E. Busch et al of Maryland for ULTRASONIC TEST CHAMBER FOR TRAY PRODUCTION SYSTEM AND THE LIKE appearing in the Official Gazette of May 24, 2005 should be deleted since no patent was granted."

Karen Creasy

Karen Creasy
Petitions Examiner
Office of Petitions
Office of the Deputy Commissioner
for Patent Examination Policy

cc: Paul Harrison, MDW-4B03, (FAX-273-5468
Deneise Boyd, MDE-3D39 (FAX-273-5124)
Mary Louise McAskill, ST-8C15 (FAX 305-4372)
Niomi Farmer, ST-8C14 (FAX-305-4372)
Mary E. Johnson (Cookie), MDE-7C71 (FAX 273-0038)
Duane Davis P/OPC MDE-7D89
Tamara Greene, ST-8C13

UNITED STATES PATENT AND TRADEMARK OFFICE

Commissioner for Patents
United States Patent and Trademark Office
P.O. Box 1450
Alexandria, VA 22313-1450
www.uspto.gov

THE PROCTER & GAMBLE COMPANY
INTELLECTUAL PROPERTY DIVISION
WINTON HILL TECHNICAL CENTER - BOX 161
6110 CENTER HILL AVENUE
CINCINNATI OH 45224

COPY MAILED

SEP 0 9 2004

OFFICE OF PETITIONS

ON PETITION

In re Application of
Michael A. Snyder etal
Application No. 10/387,885
Filed: March 13, 2003
Attorney Docket No. AA567C

This is a decision on the petition, filed September 8, 2004, under 37 CFR 1.313(c)(2) to withdraw the above-identified application from issue after payment of the issue fee.

The petition is **GRANTED**.

The above-identified application is withdrawn from issue for consideration of a submission under 37 CFR 1.114 (request for continued examination). See 37 CFR 1.313(c)(2).

Petitioner is advised that the issue fee paid on July 20, 2004 in the above-identified application cannot be refunded. If, however, the above-identified application is again allowed, petitioner may request that it be applied towards the issue fee required by the new Notice of Allowance.[1]

Telephone inquiries should be directed to the undersigned at (703) 305-8859.

The application is being referred to Technology Center AU 1751 for processing of the request for continued examination under 37 CFR 1.114.

Karen Creasy

Karen Creasy
Petitions Examiner
Office of Petitions
Office of the Deputy Commissioner
for Patent Examination Policy

---

[1] The request to apply the issue fee to the new Notice may be satisfied by completing and returning the new Issue Fee Transmittal Form PTOL-85(b), which includes the following language thereon: "Commissioner for Patents is requested to apply the Issue Fee and Publication Fee (if any) or re-apply any previously paid issue fee to the application identified above." Petitioner is advised that, whether a fee is indicated as being due or not, the Issue Fee Transmittal Form **must** be completed and timely submitted to avoid abandonment. Note the language in bold text on the first page of the Notice of Allowance and Fee(s) Due (PTOL-85).

UNITED STATES PATENT AND TRADEMARK OFFICE

Commissioner for Patents
United States Patent and Trademark Office
P.O. Box 1450
Alexandria, VA 22313-1450
www.uspto.go

MERLIN INDUSTRIES
ATTENTION: ANDREW MAGGION
2904 EAST STATE STREET EXT.
HAMILTON, NJ 08619

MAILED

SEP 18 2009

OFFICE OF PETITIONS

In re Patent No. 6,886,187	:	
Issue Date: May 3, 2005	:	
Application No. 10/387,900	:	ON PETITION
Filed: March 13, 2003	:	
Attorney Docket No. MERLIN 3	:	

This is a decision on the petition under 37 CFR 1.378(c), filed July 8, 2009, to accept the unintentionally delayed payment of a maintenance fee for the above-identified patent.

The petition is **GRANTED**.

This patent expired on May 4, 2009 for failure to pay the first maintenance fee. Since this petition was submitted within twenty-four months after the six-month grace period provided in 37 CFR 1.362(e), the petition was timely filed under the provisions of 37 CFR 1.378(c).

The maintenance fee is hereby accepted and the above-identified patent is reinstated as of the mail date of this decision.

It is not apparent whether the person signing the statement of unintentional delay was in a position to have firsthand or direct knowledge of the facts and circumstances of the delay at issue. Nevertheless, such statement is being treated as having been made as the result of a reasonable inquiry into the facts and circumstances of such delay. In the event that such an inquiry has not been made, petitioner must make such an inquiry. If such inquiry results in the discovery that the delay in paying the maintenance fee under 37 CFR 1.378(c) was intentional, petitioner must notify the Office.

There is no indication that the person signing the petition was ever given a power of attorney in the above application. If the person signing the petition desires to receive future correspondence regarding this application, the appropriate power of attorney document must be submitted. While a courtesy copy of this decision is being mailed to the person signing the petition, all future

correspondence will be directed to the address currently of record until appropriate instructions are received.

Telephone inquiries concerning this decision should be directed to the undersigned at (571) 272-3208.

The patent file is being referred to Files Repository.

/KOC/
Karen Creasy
Petitions Examiner
Office of Petitions

cc

MCNEELY, BODENDORF LLC,
66 WITHERSPOON ST.,
STE 1 PMB 317
PRINCETON, NJ 08542-9944

UNITED STATES PATENT AND TRADEMARK OFFICE

Commissioner for Patents
United States Patent and Trademark Office
P.O. Box 1450
Alexandria, VA 22313-1450
www.uspto.gov

J C PATENTS, INC.
4 VENTURE, SUITE 250
IRVINE, CA 92618

COPY MAILED

JUL 13 2005

OFFICE OF PETITIONS

Patent No. 6,794,606	:	
Issue Date: September 21, 2004	:	
Application No. 10/387,916	:	ON PETITION
Filed: March 12, 2003	:	
Attorney Docket No. JCLA7525-D	:	

This is a decision on the petition under 37 CFR 1.182, filed May 5, 2005, requesting issuance of a duplicate Letters Patent for the above-identified application.

Petitioner contends that the applicant did not receive the patent grant for the above-identified patent.

However, the showing required to establish non-receipt of an Office communication, in this instance, the letters patent, must include a statement from the practitioner stating that the Office communication was not received by the practitioner and attesting to the fact that a search of the file jacket and docket records indicates that the Office communication was not received. A copy of the docket, or any postal or office records where the non-received Office communication would have been entered had it been received, must be attached to and referenced in practitioner's statement.

Accordingly, The petition is **dismissed**.

Any questions concerning this matter may be directed to the undersigned at (571) 272-3228.

Edward J. Tannouse
Petitions Attorney
Office of Petitions
United States Patent and Trademark Office

UNITED STATES PATENT AND TRADEMARK OFFICE

COMMISSIONER FOR PATENTS
UNITED STATES PATENT AND TRADEMARK OFFICE
P.O. BOX 1450
ALEXANDRIA, VA 22313-1450
www.uspto.gov

PARK, VAUGHAN & FLEMING, LLP
702 MARSHALL STREET
SUITE 310
REDWOOD CITY, CA 94063

COPY MAILED
AUG 27 2003
OFFICE OF PETITIONS

In re Application of	:	
Teplov, et al.	:	DECISION DISMISSING
Application No. 10/387,920	:	PETITION
Filed: March 13, 2003	:	
Attorney Docket No. OR03-03301	:	

This is a decision on the petition under 37 CFR §1.10(d), filed June 27, 2003, requesting that the above-identified application be accorded a filing date of March 12, 2003, rather than the presently accorded filing date of March 13, 2003.

The petition is **dismissed**.

Applicants request the earlier filing date on the basis that the application was purportedly deposited in Express Mail service (Express Mail mailing label #EV125787612US) on March 12, 2003, pursuant to the requirements of 37 CFR §1.10. However, the Express Mail mailing label identified in the original application papers indicates a "date-in" of March 13, 2003. Applicants allege that the date of mailing indicated by the Express Mail mailing label is a U.S. Postal Service (USPS) error and the correct date of mailing is March 12, 2003.

Petitioner contends that the Express Mail package containing the application "is one of a group of four related patent applications that were deposited, at the same time, in the same Express Mail box, the afternoon of March 12, 2003. The acceptance times later recorded by the USPS varied by just 38 minutes, but resulted in only one application (serial No. 10/387,764) being accorded the correct filing date of March 12, 2003." The Customer Copy of the Express Mail mailing label indicates a "Date In" of March 13, 2003.

Paragraph (a) of 37 CFR §1.10 states that:

> "Any correspondence received by the Patent and Trademark Office (Office) that was delivered by the "Express Mail Post

Office to Addressee" service of the United States Postal Service (USPS) will be considered filed in the Office on the date of deposit with the USPS. The date of deposit with the USPS is shown by the "date-in" on the "Express Mail" mailing label or other official USPS notation. If the USPS deposit date cannot be determined, the correspondence will be accorded the Office receipt date as the filing date. See §1.6(a)." (Emphasis supplied)

Paragraph (d) of 37 CFR §1.10 states that:

Any person filing correspondence under this section that was received by the Office and delivered by the "Express Mail Post Office to Addressee" service of the USPS, who can show that the "date-in" on the "Express Mail" mailing label or other official notation entered by the USPS was incorrectly entered or omitted by the USPS, may petition the Commissioner to accord the correspondence a filing date as of the date the correspondence is shown to have been deposited with the USPS, provided that:

(1) The petition is filed promptly after the person becomes aware that the Office has accorded, or will accord, a filing date based upon an incorrect entry by the USPS;

(2) The number of the "Express Mail" mailing label was placed on the paper(s) or fee(s) that constitute the correspondence prior to the original mailing by "Express Mail"; and

(3) The petition includes a showing which establishes, to the satisfaction of the Commissioner, that the requested filing date was the date the correspondence was deposited in "Express Mail Post Office to Addressee" service prior to the last scheduled pickup for that day. Any showing pursuant to this paragraph must be corroborated by evidence from the USPS or that came into being after deposit and within one business day of the deposit of the correspondence in the "Express Mail Post Office to Addressee" service of the USPS. Any statement submitted in support of such a showing pursuant to this paragraph must be a verified

> statement if made by a person other than an employee of the USPS or a practitioner as defined in §10.1(r) of this chapter. (Emphasis supplied)

A grantable petition under 37 CFR §1.10(d) must include "a showing which establishes, to the satisfaction of the Commissioner, that the requested filing date was the date the correspondence was deposited in "Express Mail Post Office to Addressee" service prior to the last scheduled pickup for that day." In addition, the showing "must be corroborated by evidence from the USPS or that came into being after deposit and within one business day of the deposit of the correspondence in the 'Express Mail Post Office to Addressee' service of the USPS."

The petition filed June 27, 2003, is not accompanied by the corroborating evidence required by the rule. Accordingly, the petition must be dismissed.

Please note, "37 CFR 1.10(b) further provides that correspondence should be deposited directly with an employee of the USPS to ensure that the person depositing the correspondence receives a legible copy of the "Express Mail" mailing label with the "date-in" clearly marked, and that persons dealing indirectly with the employees of the USPS (such as by depositing correspondence in an "Express Mail" drop box) do so at the risk of not receiving a copy of the "Express Mail" mailing label with the desired "date-in" clearly marked. On petition, the failure to obtain an "Express Mail" receipt with the "date-in" clearly marked may be considered an omission that could have been avoided by the exercise of due care, as discussed below. While the Office strongly urges direct deposit of "Express Mail" correspondence in order to obtain a legible copy of the "Express Mail" mailing label, parties are not precluded from using "Express Mail" drop boxes, but do so at their own risk." (Emphasis added). See MPEP 513.

The application is being returned to Technology Center 2100 for examination in due course with the presently accorded filing date of March 13, 2003.

Telephone inquiries concerning this matter may be directed to the undersigned at (703) 306-9200.

Edward J. Tannouse
Petitions Attorney
Office of Petitions
United States Patent and Trademark Office

UNITED STATES PATENT AND TRADEMARK OFFICE

COMMISSIONER FOR PATENTS
UNITED STATES PATENT AND TRADEMARK OFFICE
P.O. BOX 1450
ALEXANDRIA, VA 22313-1450
www.uspto.gov

COPY MAILED

JUL 13 2007

OFFICE OF PETITIONS

EDWARD APPLETON GAYLOR
265 LONG HILL RD.
LITTLE FALLS, NJ 07424

In re Application of	:	
Edward A. Gaylor	:	
Application No. 10/387,928	:	ON PETITION
Filed: March 13, 2003	:	
Attorney Docket No. None	:	

The above-identified application has been referred to the Office of Petitions for consideration of a communication filed June 26, 2007.

A review of the record indicates that the application was held abandoned for a failure to respond to a non-final Office action mailed September 28, 2006. A Notice of Abandonment was mailed on April 16, 2007. In response, on April 27, 2007 a Petition for Revival of an Application for Patent Abandoned Unintentionally Under 37 CFR 1.137(b) was filed. Thereafter, on June 26, 2007, the present communication was filed.

For reasons noted in the communication of June 26, 2007, applicant requests that the petition to revive under 37 CFR 1.137(b) filed April 27, 2007, be withdrawn and that the petition fee paid therefor be refunded.

Since the present request was filed before any consideration of the petition under 37 CFR 1.137(b) filed April 27, 2007, the request is **GRANTED**.

In view of the June 26, 2007 request, the petition under 37 CFR 1.137(b) is **DISMISSED**. The $750 petition fee will be refunded to applicant's credit card.

Any questions concerning this matter may be directed to the undersigned at (571) 272-3204.

Sherry D. Brinkley

Sherry D. Brinkley
Petitions Examiner
Office of Petitions

UNITED STATES PATENT AND TRADEMARK OFFICE

COMMISSIONER FOR PATENTS
UNITED STATES PATENT AND TRADEMARK OFFICE
P.O. BOX 1450
ALEXANDRIA, VA 22313-1450
www.uspto.gov

Paper No. 8

MCKEE, VOORHEES & SEASE, P.L.C.
ATTN: PIONEER HI-BRED
801 GRAND AVENUE, SUITE 3200
DES MOINES IA 50309-2721

COPY MAILED

SEP 2 2 2003

OFFICE OF PETITIONS

In re Application of	:
Niu et al.	: DECISION DISMISSING
Application No. 10/387,937	: PETITION
Filed: 13 March, 2003	:
Attorney Docket No. P05565US01	:

This is a decision on the petition filed on 14 July, 2003, requesting that the above-identified application be accorded a filing date of 13 March, 2003, with 25 sheets of drawings as a part of the original disclosure.

The petition is dismissed.

The application was filed on 13 March, 2003. However, on 11 June, 2003, Initial Patent Examination Division mailed a "Notice Of Incomplete Nonprovisional Application" stating that the application had not been accorded a filing date because the application had been deposited without drawings as required by 35 U.S.C. § 113.

In response, on 14 July, 2003, the present petition was filed, accompanied by, *inter alia*, 25 sheets of drawings. Petitioners assert that the drawings are incorporated by reference from provisional Application No. 60/364,065. Petitioners further assert that the 25 sheets of drawings filed with the present petition are a copy of the drawings filed with the prior-filed provisional application.

A search of the official file reveals that on 13 March, 2003, an application transmittal letter was filed which contains the following paragraph:

> For CONTINUATION OR DIVISIONAL APPS only: The entire disclosure of the prior application, from which an oath or declaration is supplied under Box 5b, is

> considered a part of the disclosure of the accompanying continuation or divisional application and is hereby incorporated by reference. The incorporation can only be relied upon when a portion has been inadvertently omitted from the submitted application parts. (Emphasis in original)

The petition is dismissed because this application is **not** a continuation or divisional application of the prior filed application. Rather, the present application claims priority to a prior-filed provisional application. As the incorporation by reference statement on the transmittal letter clearly states that it applies only to continuation and divisional applications, and petitioner did not indicate on the transmittal sheet that this application was a continuation, continuation-in-part, or divisional of the prior-filed application, petitioners have not incorporated the prior application by reference.

Since no 25 sheets of drawings were a part of the papers filed on 13 March, 2003, the application cannot be accorded a filing date with these sheets of drawings as a part of the original disclosure of this application.

However, a review of the record reveals that Claims 16-20 are method claims. It has been PTO practice to treat an application that contains at least one process or method claim as an application for which a drawing is not necessary for an understanding of the invention under 35 U.S.C. 113 (first sentence).[1] Therefore, the present application is deemed to be an application which does not require a drawing for an understanding of the invention. Accordingly, the application, as filed, is entitled to a filing date without the drawings.

In view of the above, the "Notice" mailed 11 June, 2003, was mailed in error and is hereby withdrawn to the extent it states that the application is not entitled to a filing date.

The petition is granted to the extent that the application will be accorded a filing date of 13 March, 2003, without drawings as a part of the original disclosure of this application. The 25 sheets of drawings filed with the present petition will not be used for processing or examination, but will be retained in the application file.

---

[1] MPEP 601.01(f).

If petitioners wish to have the drawings entered in the application, a preliminary amendment adding the drawings should be filed prior to the first Office action. If the drawings are filed as a preliminary amendment, they will be reviewed by the examiner for new matter.

The fee of $130.00 paid with the present petition will be refunded to counsel's deposit account, No. 26-0084.

Receipt of the declaration filed 14 July, 2003, is acknowledged.

The application is being returned to the Office of Initial Patent Examination for reprocessing with a filing date of 13 March, 2003, using only the application papers filed on that date, and an indication in USPTO records that zero (0) sheets of drawings were present on filing.

Telephone inquiries specific to this matter should be directed to the undersigned at 703 308-6918.

DWood

Douglas I. Wood
Senior Petitions Attorney
Office of Petitions

UNITED STATES PATENT AND TRADEMARK OFFICE

Commissioner for Patents
United States Patent and Trademark Office
P.O. Box 1450
Alexandria, VA 22313-1450
www.uspto.gov

HEAD, JOHNSON & KACHIGIAN
228 W 17TH PLACE
TULSA OK 74119

COPY MAILED

JAN 2 7 2005

OFFICE OF PETITIONS

In re Application of	:	
Freemantle, Tony	:	
Application No. 10/387,939	:	ON PETITION
Filed: March 13, 2003	:	
Attorney Docket No. BAI525-108/03063	:	

This is a decision on the petition under 37 C.F.R. § 1.137(b), filed January 18, 2005, to revive the above-identified application.

The petition is **GRANTED.**

This application became abandoned for failure to timely reply to the non-final Office action mailed May 13, 2004. No extensions of time under the provisions of 37 CFR 1.136(a) were timely obtained. Accordingly, this application became abandoned on August 14, 2004. A Notice of Abandonment was mailed January 4, 2005.

Petitioner has met the requirements to revive the above-identified application pursuant to 37 CFR 1.137(b).

An extension of time under 37 CFR 1.136 must be filed prior to the expiration of the maximum extendable period for reply. See In re Application of S., 8 USPQ2d 1630, 1631 (Comm'r Pats. 1988). Accordingly, since the $490.00 extension of time fee submitted on November 17, 2004 was subsequent to the maximum extendable period for reply, this fee is unnecessary and will be credited to petitioner's deposit account.

This matter is being referred to Technology Center 3700 for further examination on the merits.

Telephone inquiries regarding this decision should be directed to the undersigned at (571) 272-3282.

Liana Chase

Liana Chase
Petitions Examiner
Office of Petitions
Office of the Deputy Commissioner
for Patent Examination Policy

UNITED STATES PATENT AND TRADEMARK OFFICE

Commissioner for Patents
United States Patent and Trademark Office
P.O. Box 1450
Alexandria, VA 22313-1450
www.uspto.gov

KENYON & KENYON LLP
ONE BROADWAY
NEW YORK NY 10004

COPY MAILED

MAY 30 2008

OFFICE OF PETITIONS

In re Application of :
Stern et al. :
Application No. 10/387,940 : DECISION ON PETITION
Filed: 03/12/2003 :
Attorney Docket No. 12493/61 :

This is decision on the petition under 37 CFR 1.181, filed March 21, 2007, to withdraw the holding of abandonment. The petition was recently forwarded to the Office of Petition. The undersigned immediately reviewed the matter and issued this decision upon receiving the petition. The Office sincerely apologizes for any inconvenience.

On July 20, 2006, the Office mailed a nonfinal Office action, which set a three-month shortened statutory period for reply. Therefore, a response was due on or before October 20, 2006. In the apparent absence of a timely filed response, the Office mailed a Notice of Abandonment on February 26, 2007.

In the present petition, petitioners asserted that they filed a timely response to the nonfinal. In support of the assertion, petitioners submitted a copy of the response and a date-stamped postcard receipt, acknowledging receipt of an amendment on October 24, 2006.

Upon reviewing the record, the amendment was not located among the papers in the Image File Wrapper. The date-stamped postcard receipt serves as prima facie evidence of receipt of the amendment on October 24, 2006. See MPEP 503. The copy of the amendment included a certificate of mailing dated October 20, 2006. Therefore, petitioners are relying of the certificate of mailing as evidence of the timely filing of the reply on October 20, 2006.

"Where a certificate of mailing under 37 CFR 1.8, but not a postcard receipt, is relied upon in a petition to withdraw the holding of abandonment, see 37 CFR 1.8(b) and MPEP § 512." MPEP 711.03(c)(I)(B). Applicants may notify the USPTO of the previous mailing and supply a duplicate copy of the correspondence, accompanied by a statement attesting on a personal knowledge basis, or to the satisfaction of the Director, to the previous timely mailing. MPEP 512(IV). If the statement attesting to the previous timely mailing is not made by the person who signed the Certificate of

Mailing (i.e., there is no personal knowledge basis), then the statement attesting to the previous timely mailing should include evidence that supports the conclusion that the correspondence was actually mailed (e.g., copies of a mailing log establishing that correspondence was mailed for that application). MPEP 711.03(c)(I)(B).

Petitioners did not provide a statement attesting to a personal knowledge of the mailing of the original response on the date indicated on the certificate of mailing (e.g., a statement by Loretta E. Clark, the person who signed the certificate). Accordingly, the petition to withdraw the holding of abandonment is **dismissed**.

Before the Office can withdraw the holding of abandonment, petitioners must submit a request for reconsideration and a statement in compliance with 37 CFR 1.8(b)(3). A request for reconsideration of this decision must be submitted with TWO (2) MONTHS of the mailing date of this decision. The request for reconsideration should include a cover sheet entitled "Renewed Petition Under 37 CFR 1.181."

Further correspondence with respect to this matter should be addressed as follows:

By mail: Mail Stop Petition
Commissioner for Patents
P.O. Box 1450
Alexandria, VA 22313-1450

By FAX: (571) 273-8300
Attn: Office of Petitions

By hand: Customer Service Window
Randolph Building
401 Dulany Street
Alexandria, VA 22314

Correspondence may also be submitted via the Electronic Filing System of the USPTO.

Telephone inquiries related to this decision should be directed to the undersigned at (571) 272-3211.

Christina T. Donnell

Christina Tartera Donnell
Senior Petitions Attorney
Office of Petitions

UNITED STATES PATENT AND TRADEMARK OFFICE

Commissioner for Patents
United States Patent and Trademark Office
P.O. Box 1450
Alexandria, VA 22313-1450
www.uspto.gov

KENYON & KENYON LLP
ONE BROADWAY
NEW YORK NY 10004

COPY MAILED
AUG 15 2008

In re Application of	:	
Stern et al.	:	
Application No. 10/387,940	:	DECISION ON PETITION
Filed: 03/12/2003	:	
Attorney Docket No. 12493/61	:	

This is decision on the renewed petition under 37 CFR 1.181, filed July 15, 2008, to withdraw the holding of abandonment.

On July 20, 2006, the Office mailed a nonfinal Office action, which set a three-month shortened statutory period for reply. Therefore, a response was due on or before October 20, 2006. In the apparent absence of a timely filed response, the Office mailed a Notice of Abandonment on February 26, 2007.

Petitioners asserted that they filed a timely response to the nonfinal. In support of the assertion, petitioners submitted a copy of the response and a date-stamped postcard receipt, acknowledging receipt of an amendment in the USPTO on October 24, 2006.

Upon reviewing the record, the amendment was not located among the papers in the Image File Wrapper. The date-stamped postcard receipt serves as prima facie evidence of receipt of the amendment in the USPTO on October 24, 2006. See MPEP 503. The copy of the amendment included a certificate of mailing dated October 20, 2006. Therefore, petitioners are relying of the certificate of mailing as evidence of the timely filing of the reply on October 20, 2006.

"Where a certificate of mailing under 37 CFR 1.8, but not a postcard receipt, is relied upon in a petition to withdraw the holding of abandonment, see 37 CFR 1.8(b) and MPEP § 512." MPEP 711.03(c)(I)(B). Applicants may notify the USPTO of the previous mailing and supply a duplicate copy of the correspondence, accompanied by a statement attesting on a personal knowledge basis, or to the satisfaction of the Director, to the previous timely mailing. MPEP 512(IV). If the statement attesting to the previous timely mailing is not made by the person who signed the Certificate of Mailing (i.e., there is no personal knowledge basis), then the statement attesting to the previous timely mailing should include evidence that supports the conclusion that the

correspondence was actually mailed (e.g., copies of a mailing log establishing that correspondence was mailed for that application). MPEP 711.03(c)(I)(B).

The present renewed petition satisfies the requirements of 37 CFR 1.8(b). Specifically, on renewed petition, petitioners provided a statement by Loretta E. Clark, the person who signed the certificate, attesting to a personal knowledge of the mailing of the original response on the date indicated on the certificate of mailing.

Accordingly, the petition to withdraw the holding of abandonment is **GRANTED**. The holding of abandonment for failure to timely reply to the nonfinal Office action is hereby withdrawn and the application restored to pending status.

The copy of the reply received with the petition will be accepted in place of the reply shown to have been mailed on October 20, 2006.

This application is being referred to Technology Center Art Unit 2878 for further action on the reply.

Telephone inquires regarding this decision may be directed to the undersigned at (571) 272-3211.

Christina Tartera Donnell

Christina Tartera Donnell
Senior Petitions Attorney
Office of Petitions

UNITED STATES PATENT AND TRADEMARK OFFICE

Commissioner for Patents
United States Patent and Trademark Office
P.O. Box 1450
Alexandria, VA 22313-1450
www.uspto.gov

COPY MAILED

OCT 12 2007

OFFICE OF PETITIONS

WORKMAN NYEGGER/MICROSOFT
1000 EAGLE GATE TOWER
60 EAST SOUTH TEMPLE
SALT LAKE CITY, UT 84111

In re Application of :
Yun Lin et al :
Application No. 10/387,972 : ON PETITION
Filed: March 12, 2003 :
Attorney Docket No. PROTOCOL-INDEPENDENT CLIENT-SIDE CACHING SYSTEM AND METHOD

This is a decision on the petition, filed October 10, 2007 under 37 CFR 1.313(c)(2) to withdraw the above-identified application from issue after payment of the issue fee.

The petition is **GRANTED**.

The above-identified application is withdrawn from issue for consideration of a submission under 37 CFR 1.114 (request for continued examination). See 37 CFR 1.313(c)(2).

Petitioner is advised that the issue fee paid on September 6, 2007 in the above-identified application cannot be refunded. If, however, the above-identified application is again allowed, petitioner may request that it be applied towards the issue fee required by the new Notice of Allowance.[1]

Telephone inquiries should be directed to Irvin Dingle at (571) 272-3210.

This matter is being referred to Technology Center AU 2153 for processing of the request for continued examination under 37 CFR 1.114 and for consideration of the concurrently filed Information Disclosure Statement.

Irvin Dingle
Petitions Examiner
Office of Petitions

---

[1] The request to apply the issue fee to the new Notice may be satisfied by completing and returning the new Issue Fee Transmittal Form PTOL-85(b), which includes the following language thereon: Commissioner for Patents is requested to apply the Issue Fee and Publication Fee (if any) or re-apply any previously paid issue fee to the application identified above. Petitioner is advised that, whether a fee is indicated as being due or not, the Issue Fee Transmittal Form **must** be completed and timely submitted to avoid abandonment. Note the language in bold text on the first page of the Notice of Allowance and Fee(s) Due (PTOL-85).

UNITED STATES PATENT AND TRADEMARK OFFICE

COMMISSIONER FOR PATENTS
UNITED STATES PATENT AND TRADEMARK OFFICE
P.O. BOX 1450
ALEXANDRIA, VA 22313-1450
www.uspto.gov

Paper No. 3

PARK, VAUGHAN & FLEMING LLP
702 MARSHALL STREET
SUITE 310
REDWOOD CITY, CA 94063

COPY MAILED

JUL 1 5 2003

OFFICE OF PETITIONS

In re Application of :
Huck et al. :
Application No. 10/387,984 :
Filed: March 13, 2003 :
Attorney Docket No. OR03-03101 :

DECISION ON PETITION

This is a decision on the Petition Under 37 CFR 1.10 to Correct Filing Date of a Patent Application. Petitioner requests that the above-identified application be accorded a filing date of March 12, 2003, instead of the presently accorded date of March 13, 2003.

The petition is **dismissed**.

Any further petition to revive the above-identified application must be submitted within TWO (2) MONTHS from the mail date of this decision. Extensions of time under 37 CFR 1.136(a) are permitted. The reconsideration request should include a cover letter entitled "Request for Reconsideration of Petition under 37 CFR 1.10", and be directed to Petitions Attorney Derek L. Woods. This is **not** final agency action within the meaning of 5 U.S.C. § 704.

Petitioner alleges the application was deposited in "Express Mail" service with the U.S. Postal Service, on March 12, 2003. In support, Petitioner provides a copy of the Express Mail Label, number EV125787609US, which shows a "Date In" of March 13, with no year being indicated on the form, and a copy of the USPS Track and Confirm, which indicates acceptance on March 13, 2003. It is also noted that the application transmittal form includes Express Mail label number EV125787609US. Petitioner also provides a copy of an earlier request to correct the filing date which avers that the instant application was one of four placed in the Express Mail Service on March 12, 2002.

In August, 2001, section 1.10(a) of title 37, Code of Federal Regulations, stated that:

> Any correspondence received by the Patent and Trademark Office (Office) that was delivered by the "Express Mail Post Office to Addressee" service of the United States Postal Service (USPS) will be considered filed in the Office on the date of deposit with the USPS. The date of deposit with the USPS is shown by the "date-in" on the "Express Mail" mailing label or other official USPS notation. If the USPS deposit date cannot be determined, the correspondence will be accorded the Office receipt date as the filing date.

The PTO considers the date the paper or fee is shown to have been deposited as Express Mail as set forth in §1.10(a) to be the "Date-In" on the Express Mail label.

Placing the "Date-In" on the Express Mail label by the postal clerk establishes that the package was actually received by the Postal Service. That is the date that verifies that the package was actually mailed.

Paragraph (d) of 37 CFR 1.10 states that:

> Any person filing correspondence under this section that was received by the Office and delivered by the "Express Mail Post Office to Addressee" service of the USPS, who can show that the "date-in" on the "Express Mail" mailing label or other official notation entered by the USPS was incorrectly entered or omitted by the USPS, may petition the Commissioner to accord the correspondence a filing date as of the date the correspondence is shown to have been deposited with the USPS, provided that:
>
> (1) The petition is filed promptly after the person becomes aware that the Office has accorded, or will accord, a filing date based upon an incorrect entry by the USPS;
>
> (2) The number of the "Express Mail" mailing label was placed on the paper(s) or fee(s) that constitute the correspondence prior to the original mailing by "Express Mail;" and
>
> (3) The petition includes a showing which establishes, to the satisfaction of the Commissioner, that the requested filing date was the date the correspondence was deposited in the "Express Mail Post Office to Addressee" service prior to the last scheduled pickup for that day. Any showing pursuant to this paragraph must be corroborated by evidence from the USPS or that came into being after deposit within one business day of the deposit of the correspondence in the "Express Mail Post Office to Addressee" service of the USPS.

The instant Petition lacks the showing required in item (3).

Petitioner has failed to provide any corroborative evidence from the USPS or that came into being <u>after deposit</u> within one business day of the deposit of the correspondence in the "Express Mail Post Office to Addressee" service of the USPS. <u>See</u>, MPEP § 513. Relevant evidence provided by Petitioner consists of the Express Mail mailing label, which shows a "date in" of March 13, and the USPS track and confirm provided by Petitioner, which shows that the Express Mail item was accepted on March 13, 2003, at 12:11 am. Accordingly, there is no discrepancy between the filing date accorded the application and any of the evidence putatively supporting Petitioner's contention that the filing date of the application should by March 12, 2003.

Telephone inquiries concerning this matter should be directed to the undersigned at (703) 305-0014.

Derek L. Woods
Petitions Attorney
Office of Petitions

UNITED STATES PATENT AND TRADEMARK OFFICE

COMMISSIONER FOR PATENTS
UNITED STATES PATENT AND TRADEMARK OFFICE
P.O. BOX 1450
ALEXANDRIA, VA 22313-1450
www.uspto.gov

MAILED
FROM DIRECTORS OFFICE

DEC 0 7 2004

TECHNOLOGY CENTER 3600

Henry M. Bissell
6820 La Tijera Boulevard, Suite 106
Los Angeles, CA 90045

In re application of:
Mario R. Carrillo
Application No. 10/388,003
Filed: March 13, 2003
For: CONNECTOR

: **DECISION ON REQUEST**
: **FOR WITHDRAWAL OF**
: **ATTORNEY**

This is a decision on the request filed on June 1, 2004, under 37 CFR 1.36 and MPEP 402.06, requesting permission to withdraw as the attorney of record in the above-identified application.

The request is **NOT APPROVED**.

Under 37 CFR 1.36 an attorney may withdraw only upon application to and approval by the Commissioner. It should be noted that a withdrawal is effective when approved, not when filed. Besides giving due notice to his or her client and delivering to the client all papers and property to which the client is entitled as specified under 37 CFR 10.40, approval of such a request requires that the following conditions be met:

A) Each attorney of record must sign the notice of withdrawal, or the notice must contain a clear indication of one attorney signing on behalf of another, because the Office does not recognize law firms;

B) A proper reason for the withdrawal as enumerated in 37 CFR 10.40(b) or subsection (1)-(6) of 37 CFR 10.40(c) must be provided; and

C) If withdrawal is requested in accordance with 37 CFR 10.40(c) above, there must be at least 30 days between approval of the withdrawal and the later of the expiration date of a time period for reply or the expiration date of the period which can be obtained by a petition and fee for extension of time under 37 CFR 1.136(a).

As to condition A), the attorney signing the request does not have power of attorney in this application. There is no record of power of attorney ever being given to the attorney making the request.

Kenneth J. Dorner
Special Programs Examiner
Patent Technology Center 3600
(703) 308-0866

KJD/vdb: 10/27/04

UNITED STATES PATENT AND TRADEMARK OFFICE

COMMISSIONER FOR PATENTS
UNITED STATES PATENT AND TRADEMARK OFFICE
P.O. BOX 1450
ALEXANDRIA, VA 22313-1450
www.uspto.gov

Paper No. 6

DAVID TOREN ESQ
SIDLEY AUSTIN BROWN & WOOD LLP
787 SEVENTH AVENUE
NEW YORK NY 10019-6018

COPY MAILED

MAR 3 1 2004

OFFICE OF PETITIONS

In re Application of
Wolf, et al.
Application No. 10/388,012
Filed: March 13, 2003
Attorney Docket No. DT-6457

ON PETITION

This is a decision on the petition to revive under 37 CFR 1.137(a), filed February 26, 2004 (Certificate of Mailing dated February 24, 2004), which is being treated as a petition to withdraw the holding of abandonment under 37 CFR 1.181.

The petition under 37 CFR 1.181 is **GRANTED**.

The above-identified application became abandoned for failure to timely file a response to the Notice to File Missing Parts of Nonprovisional Application mailed May 8, 2003. This Notice set a shortened statutory period for reply of two months for submission of an oath or declaration and the surcharge for its late filing. No extensions of time under 37 CFR 1.136(a) were obtained. No oath or declaration and surcharge having been received, the above-identified application became abandoned on July 9, 2003. A Notice of Abandonment was mailed on February 10, 2004.

With regards to item (3), petitioner states that he did not receive the Notice to File Missing Parts of Nonprovisional Application. To establish nonreceipt of an Office action, a petitioner must: 1) include a statement that the Office action was not received; 2) attest to the fact that a search of the file jacket and docket records indicates that the Office action was not received; and 3) include a copy of the docket record where the nonreceived Office action would have been entered had it been

received and docketed.[1] A proper docket report consists of a "docket record where the nonreceived Office action would have been entered had it been received and docketed."[2] "For example, if a three month period for reply was set in the nonreceived Office action, a copy of the docket record showing all replies docketed for a date three months from the mail date of the nonreceived Office action must be submitted..."[3]

Here, petitioner has submitted a satisfactory docket record showing all his replies docketed for the date of July 8, 2003 (the reply date set by the Notice to File Missing Parts of Nonprovisional Application). The record does not indicate a docketing entry for the instant application. In addition, petitioner has met the other requirements to establish non-receipt of the Notice to File Missing Parts of Nonprovisional Application.

Accordingly, the holding of abandonment is **WITHDRAWN**.

Given the basis for granting this petition, the $130 fee submitted will be refunded to petitioner under separate cover.

The application file is being forwarded to the Office of Initial Patent Examination for preexamination processing.

Telephone inquiries related to this decision should be directed to the undersigned at (703) 305-0272.

Cliff Congo
Petitions Attorney
Office of Petitions

---

[1] See MPEP 711.03(c)(II).

[2] MPEP 711.03(c)(II) (emphasis added).

[3] Id.

UNITED STATES PATENT & TRADEMARK OFFICE
Washington, D.C. 20231

REQUEST FOR PATENT FEE REFUND

1 Date of Request: 3/30/04

2 Serial/Patent # 10/388,012

	3 Please refund the following fee(s):	4 PAPER NUMBER	5 DATE FILED	6 AMOUNT
	Filing			$
	Amendment			$
	Extension of Time			$
	Notice of Appeal/Appeal			$
✓	Petition	4	2/26/04	$ 130.00
	Issue			$
	Cert of Correction/Terminal Disc.			$
	Maintenance			$
	Assignment			$
	Other			$

7 TOTAL AMOUNT OF REFUND $ 130.00

8 TO BE REFUNDED BY:

✓ Treasury Check

Credit Deposit A/C #:

9 [ ][ ]--[ ][ ][ ][ ]

10 REASON:

	Overpayment
	Duplicate Payment
✓	No Fee Due (Explanation):

137(a) petition treated and granted under 181

11 REFUND REQUESTED BY:

TYPED/PRINTED NAME: Cliff Congo

TITLE: Petitions Attorney

SIGNATURE: Cliff Congo

PHONE: 305-0272

OFFICE: Petitions

****

THIS SPACE RESERVED FOR FINANCE USE ONLY:

APPROVED: Alicia Kelly

DATE: 3/31/04

Instructions for completion of this form appear on the back. After completion, attach white and yellow copies to the official file and mail or hand-carry to:

Office of Finance
Refund Branch
Crystal Park One, Room 802B

FORM PTO 1577
(01/90)

UNITED STATES PATENT AND TRADEMARK OFFICE

COMMISSIONER FOR PATENTS
UNITED STATES PATENT AND TRADEMARK OFFICE
P.O. BOX 1450
ALEXANDRIA, VA 22313-1450
www.uspto.gov

Paper No. 7

Stephanie Seidman
Heller Ehrman White & McAuliffe LLP
4350 La Jolla Village Drive, 7th Floor
San Diego CA 92122

COPY MAILED

NOV 1 8 2003

OFFICE OF PETITIONS

In re Application of
Köster, Shchepinov & Little
Application No. 10/388,027
Filed: March 11, 2003
Attorney Docket No. 24743-2305C
For: COMPOUNDS AND METHODS FOR ANALYZING THE PROTEOME

: DECISION ACCORDING STATUS
: UNDER 37 CFR 1.47(a)

This is in response to the petition under 37 CFR 1.47(a), filed October 29, 2003.

The petition is granted.

Petitioners have shown that the non-signing inventor, Mikhail S. Shchepinov, cannot be located. Specifically, the declaration of Attorney Stephanie Seidman establishes that numerous attempts to deliver the application papers to the inventor at recent addresses were unsuccessful. Petitioners have diligently searched for the inventor overseas, but the inventor cannot be located. Petitioners have submitted a declaration in compliance with 37 CFR 1.63 and 1.64.

This application and papers have been reviewed and found in compliance with 37 CFR 1.47(a). This application is hereby accorded Rule 1.47(a) status.

As provided in Rule 1.47(c), this Office will forward notice of this application's filing to the non-signing inventor at the address given in the petition. Notice of the filing of this application will also be published in the Official Gazette.

After this decision is mailed, the above-identified application will be forwarded to the Office of Initial Patent Examination for further processing.

Telephone inquiries should be directed to the undersigned at (703) 308-6712.

E. Shirene Willis

E. Shirene Willis
Senior Petitions Attorney
Office of Petitions

UNITED STATES PATENT AND TRADEMARK OFFICE

COMMISSIONER FOR PATENTS
UNITED STATES PATENT AND TRADEMARK OFFICE
P.O. BOX 1450
ALEXANDRIA, VA 22313-1450
www.uspto.gov

MIKHAIL S. SHCHEPINOV
13754 MANGO DRIVE
APT. 119
DEL MAR CA 92014

COPY MAILED

NOV 1 8 2003

OFFICE OF PETITIONS

LETTER

In re Application of
Koster, Shchepinov & Little
Application No. 10/388,027
Filed: March 11, 2003
Attorney Docket No. 24743-2305C
For: COMPOUNDS AND METHODS
FOR ANALYZING THE PROTEOME

Dear Mr. Shchepinov:

You are named as a joint inventor in the above identified United States patent application, filed under the provisions of 35 U.S.C. 116 (United States Code), and 37 CFR 1.47(a), Rules of Practice in Patent Cases. Should a patent be granted on the application you will be designated therein as a joint inventor.

As a named inventor you are entitled to inspect any paper in the file wrapper of the application, order copies of all or any part thereof (at a prepaid cost per 37 CFR 1.19) or make your position of record in the application. Alternatively, you may arrange to do any of the preceding through a registered patent attorney or agent presenting written authorization from you. If you care to join the application, counsel of record (see below) would presumably assist you. Joining in the application would entail the filing of an appropriate oath or declaration by you pursuant to 37 CFR 1.63.

Requests for information regarding your application should be directed to the File Information Unit at (703)308-2733. Information regarding how to pay for and order a copy of the application, or a specific paper in the application, should be directed to Certification Division at (703)308-9726 or 1(800)972-6382 (outside the Washington D.C. area).

Telephone inquiries regarding this communication should be directed to the undersigned at (703) 308-6712.

E. Shirene Willis

E. Shirene Willis
Senior Petitions Attorney
Office of Petitions

ATTORNEY OF RECORD: Stephanie Seidman
Heller Ehrman White & McAuliffe LLP
4350 La Jolla Village Drive, 7th Floor
San Diego CA 92122

UNITED STATES PATENT AND TRADEMARK OFFICE

AUG 19 2005

Commissioner for Patents
United States Patent and Trademark Office
P.O. Box 1450
Alexandria, VA 22313-1450
www.uspto.gov

FISH & RICHARDSON, PC
12390 EL CAMINO REAL
SAN DIEGO, CA 92130-2081

In re Application of	:	
Hubert Koster, Ph.D	:	
Serial No.: 10/388,027	:	PETITION TO MAKE SPECIAL
Filed: 11 March 2003	:	
Attorney Docket No.: 20985	:	

This is in response to applicant's petition filed on 28 July 2005, to make the above-identified application special under the provisions 37 CFR 1,102(c), based on the age of applicant.

Applicant has satisfied the provisions set forth in M.P.E.P. 708.02, IV. Therefore the petition is **GRANTED**.

The application will be forwarded to the examiner for action on the merits commensurate with this decision.

Should there by any questions with regard to this letter please contact Marianne Seidel by letter addressed to the Director, Technology Center 1600, P.O. Box 1450, ALEXANDRIA, VA 22313-1450, or by telephone at 572-272-0512 or by facsimile transmission to the general Office facsimile number.

Marianne Seidel
Special Program Examiner
Technology Center 1600

UNITED STATES PATENT AND TRADEMARK OFFICE

Commissioner for Patents
United States Patent and Trademark Office
P.O. Box 1450
Alexandria, VA 22313-1450
www.uspto.gov

OCT 2 1 2008

FISH & RICHARDSON, PC
P.O. BOX 1022
MINNEAPOLIS, MN 55440-1022

In re Application of:	:
Koster et al.	:
Serial No.: 10/388,027	: PETITION DECISION
Filed: March 11, 2003	:
Attorney Docket No.: **119368-00010 / 2305C**	:

This is in response to the petition filed August 26, 2008 under 37 CFR § 1.181, requesting that the finality of the Office action of June 26, 2008 be withdrawn.

BACKGROUND

The examiner mailed a non-final Office action on April 19, 2007 setting a three month statutory limit for reply. At the time of this non-final Office action, claims 1-19 and 21-23 were pending in the application. Claims 6-9, 17 and 19 were withdrawn from consideration on the merits as being directed toward a non-elected invention and claims 1-5, 10-16, 18 and 21-23 were examined on their merits. *Inter alia*, the examiner rejected claims 1-5, 10-18 and 21-23 under 35 USC 112, second paragraph; rejected claims 1-5, 10-16, 18 and 21-23 under 35 U.S.C. 112, first paragraph, for lacking written description; rejected claims 1-5, 10-16, 18 and 21-23 under 35 U.S.C. 112, first paragraph, for lacking scope of enablement; rejected claims 1-5, 13, 14, 16 and 18 under 35 USC 102(b) as being anticipated by Marshall et al. as evidenced by Glasner et al.; and rejected claims 1-5, 10-14, 16, 18 and 21 under 35 U.S.C. 103(a) as being unpatentable over Marshall et al. in view of Hesselberth et al. as evidenced by Glasner et al. Claims 1-5, 10-16, 18 and 21-23 were also provisionally rejected under obviousness-type double patenting.

In reply to the non-final Office action of April 19, 2007, applicants filed remarks, arguments and an amendment on October 25, 2007 which amendment included amendments to claims 1, 6-11, 13-15, 17, 21 as well as the addition of new claims 24-30. An unexecuted Declaration under 37 CFR 1.132 by Hubert Koster was also filed.

On November 30, 2007, applicants filed an executed Declaration under 37 CFR 1.132 by Hubert Koster.

On February 28, 2008, the examiner mailed a Notice of Non-responsive Amendment.

On March 20, 2008, applicants filed a subsequent response including remarks and additional claim amendments; specifically amending claims 11, 14, 17, 28 and 29.

On June 26, 2008, the examiner mailed a final Office action setting a three month statutory limit for reply. At the time of this final Office action, claims 1-3, 6-11, 13-17, 21 and 24-30 were pending in the application and claims 6-9, 17, 25, 26 and 30 were withdrawn from consideration on the merits as being directed toward a non-elected invention. Claims 1-3, 10, 11, 13-16, 21, 24 and 27-29 were examined on their merits. Inter alia, the examiner rejected claims 1-3, 10, 11, 13-16, 21, 24 and 27-29 under 35 U.S.C. 112, second paragraph, as being indefinite for failing to particularly point out and distinctly claim the subject matter which applicant regards as the invention. The examiner additionally rejected claims 1-3, 10, 11, 13-16, 21, 24 and 27-29 under 35 U.S.C. 101 and 35 U.S.C 112, first paragraph for lacking either a specific and substantial asserted utility or a well established utility.

In response thereto, applicants filed this petition on August 26, 2008 under 37 CFR § 1.181, requesting that the finality of the Office action of June 26, 2008 be withdrawn.

DISCUSSION

The petition and the file history have been carefully considered.

In the petition filed on August 26, 2008, applicants argue that the final Office action instituted by the Examiner on June 26, 2008 was improper and premature, contending that the rejection of claims 1-3, 10, 11, 13-16, 21, 24 and 27-29 under 35 U.S.C. 101 for lacking either a specific and substantial asserted utility or a well established utility was a new ground of rejection which was not necessitated by applicants' amendments to the claims as submitted on October 25, 2007 or March 20, 2008.

Applicants specifically state:

> Applicant respectfully disagrees not only with the rejection, but, for this Petition, that the amendments of the claims necessitated this rejection. To the extent the new rejection is pertinent to the presently pending claims, it could have been raised in the previous Office Action with respect to the claims as previously pending. *The claims have always been directed to a 2- dimensional gradient array in which moieties X and Y are presented on the surface in array of properties of each.* The claims were amended for clarity and also to limit them to embodiments in which X and Y are presented on a trityl group on the surface. The claims, however, remain directed to a two-dimensional gradient array. (p. 2, Petition, emphasis added)
>
> ...claim 1 as amended is directed to a two-dimensional gradient array of X and Y moieties as was unamended claim 1 (and all previously pending claims). The claim is amended to be more clear and to be limited to embodiments in which X and Y moieties are presented on a surface that comprises a trityl (previously X and Y could be presented on anything). The claim includes the limitations of previously pending claim 18...[t]he amended claim also includes the limitations of previously pending claims 2 and 3, which each recited, respectively, that each X moiety in a row differs in hydrophilicity, lipophilicity, charge, size or reagent specificity, and each Y moiety in each column differs in hydrophilicity, lipophilicity,

charge, size or reagent specificity. Thus, the claim as presently pending differs from previously pending claims in that it recites, that Z is trityl, that there are at least 10 compounds in the array, and the properties of X and Y previously in a dependent claim. (p. 4, Petition)

It is noted that finality of second Office actions is governed by MPEP § 706.07(a) which states:

> Under present practice, second or any subsequent actions on the merits shall be final, except where the examiner introduces a new ground of rejection that is neither necessitated by applicant's amendment of the claims nor based on information submitted in an information disclosure statement filed during the period set forth in 37 CFR 1.97(c) with the fee set forth in 37 CFR § 1.17(p).

A review of the final Office action indicates that the examiner rejected claims 1-3, 10, 11, 13-16, 21, 24 and 27-29 under 35 U.S.C. 101 for lacking either a specific and substantial asserted utility or a well established utility for the following reason:

> *Applicants claims are now drawn to a two-dimensional array of capture compounds with at least 10 loci on the surface each containing a different capture compound* (e.g., see independent claims 1 and 24). Applicants state that two-dimensional arrays such as this can be used for analyzing complex mixtures, such as the proteome (e.g., see page 3, lines 9 and 10). More specifically, Applicants state that the arrays can be used to "identify structural 'epitopes' that serve as markers for specific diseases, stratify individual populations relative to specific phenotypes, permit a detailed understanding of the proteins underlying molecular function and provide targets for drug development" (e.g., see specification, page 3, second to last paragraph). A non-limiting list of diseases mentioned include those listed in the table starting on page 90 including Alzheimer's disease, prior disease, ALS, Pcik's [*sic*, Pick's] Disease, Parkinson's disease, Diabetes Type II, multiple myeloma, plasma cell dyscrasias, etc. (p. 5, Final Office action of June 26, 2008, emphasis added).
>
> "...a person of skill in the art would still need to determine via trial and error experimentation which group of capture compounds (i.e., which set of 10) would actually be useful for diagnosing a disease such as, for example, ALS or Diabetes. Furthermore, there is no well known utility for this set of molecules." (p. 7, final Office action).

Hence, it can be said that the examiner's assertion that the claims were newly directed toward a two-dimensional array of capture compounds with at least 10 loci on the surface each containing a different capture compound prompted the rejection of claims 1-3, 10, 11, 13-16, 21, 24 and 27-29 under 35 U.S.C. 101.

However, a comparison of the claims submitted by applicants on October 25, 2007 and March 3, 2008 with the claims pending prior to the non-final Office action reveals that applicants' contention that "*The claims have always been directed to a 2- dimensional gradient array in which moieties X and Y are presented on the surface in array of properties of each*" is indeed found correct. Also evident by this comparison is that the claims pending at the time the non-final Office action was mailed plainly embodied wherein the array possessed loci on the surface of the array and wherein each contained a different capture compound. As an example, claim 1, as it was pending on March 1, 2007, prior to the non-final Office action stated:

> 1. (Previously presented) A gradient array, comprising:

a 2-dimensional array of moieties X and Y; and
a surface Z for presenting moieties X and Y, wherein: the surface Z comprises a solid support;
the X and Y moieties are arranged in a two dimensional array of continuous gradients of one or more properties of X and Y; the properties of moiety X are in a gradient along the X-axis; the properties of moiety Y are in a gradient along the Y-axis; the X moieties are each independently selected to bind to biomolecules covalently or with sufficiently high affinity so that the resulting complexes of biomolecule/X moieties are stable under conditions of mass spectrometric analysis; and
the Y moieties are each independently selected to increase the selectivity of the binding by moiety X

Hence, the only new limitation added by applicants in the amendments filed on October 25, 2007 and March 3, 2008 pertaining to the reasons given by the examiner for instituting the new rejection under 35 USC 101 was 'at least 10 loci.'

The amendment of March 1, 2007 contains the claims which were examined at the time the non-final Office action was mailed. Claims 16 and 17 of said amendment discloses that the amount of loci on the claimed array was broad, and no claim as presented on March 1, 2007 limited the array to having any specific number of loci. Hence, applicants' amendments to the claims on October 25, 2007 served to *narrow* the amount of loci on the array to 'at least 10' thereby excluding arrays having numbers of loci below 10.

In the non-final Office action, there was no utility rejection instituted by the examiner, and thus, it can be assumed that the claims apparently possessed utility at that time. That being so, in order for Applicants' amendments to necessitate the rejection under 35 USC 101 by the examiner in the final Office action, applicants' would have had to amend the claims to such an extent as *to exclude* the embodiment(s) pertaining to the number of loci on the array which were originally found to possess utility. However, this is not the case. Pertaining to the number of loci on the claimed arrays, the examiner's rejection of claims 1-3, 10, 11, 13-16, 21, 24 and 27-29 under 35 U.S.C. 101 stated "...a person of skill in the art would still need to determine via trial and error experimentation which group of capture compounds (i.e., which set of 10) would actually be useful for diagnosing a disease such as, for example, ALS or Diabetes... there is no well known utility for this set of molecules." (p. 7, final Office action)." However, this aspect of the claimed invention could have and should have been recognized in the non-final Office action as the claims examined at that time were broadly directed toward *any* number of loci on the array.

It is therefore determined that the examiner, for the first time in the final Office action, recognized that the claims lacked utility and subsequently set forth the rejections under 35 USC 101 and 112. Judging from the content of the rejections set forth in the final Office action, there is no one claim amendment which was set forth in the amendments submitted by Applicants on either October 25, 2007 or March 3, 2008 which necessitated the rejection of claims 1-3, 10, 11, 13-16, 21, 24 and 27-29 under 35 U.S.C. 101 and 112. Hence, the final Office action of June 26, 2008 is held to be in error.

Applicants' arguments are found persuasive that the final Office action issued June 26, 2008 was premature and therefore finality of said Office action will be withdrawn.

DECISION

The petition is **GRANTED.**

This application will be forwarded to the examiner for an action not inconsistent with this decision.

Should there be any questions about this decision please contact Marianne C. Seidel, by letter addressed to Director, TC 1600, at the address listed above, or by telephone at 571-272-0584 or by facsimile sent to the general Office facsimile number, 703-872-9306.

George Elliott
Director, Technology Center 1600

UNITED STATES PATENT AND TRADEMARK OFFICE

COMMISSIONER FOR PATENTS
UNITED STATES PATENT AND TRADEMARK OFFICE
P.O. BOX 1450
ALEXANDRIA, VA 22313-1450
www.uspto.gov

OSTROLENK FABER GERB & SOFFEN
1180 AVENUE OF THE AMERICAS
NEW YORK, NY 10036-8403

COPY MAILED

NOV 29 2006

OFFICE OF PETITIONS

In re Patent No. 7,011,521	:	
Issued: March 14, 2006	:	
Application No. 10/388,030	:	NOTICE
Filed: March 12, 2003	:	
Patentee: Alexandre Sierro, et al.	:	

This is a notice regarding your request for acceptance of a fee deficiency submission under 37 CFR 1.28. On September 1, 1998, the Court of Appeals for the Federal Circuit held that 37 CFR 1.28(c) is the sole provision governing the time for correction of the erroneous payment of the issue fee as a small entity. **See DH Technology v. Synergystex International, Inc. 154 F.3d 1333, 47 USPQ2d 1865 (Fed. Cir. Sept. 1, 1998).**

The Office no longer investigates or rejects original or reissue applications under 37 CFR 1.56. **1098 Off. Gaz. Pat. Office 502 (January 3, 1989)**. Therefore, nothing in this Notice is intended to imply that an investigation was done.

Your fee deficiency submission under 37 CFR 1.28 is hereby **ACCEPTED**.

This application no longer qualifies for small entity status. Accordingly, all future fees must be paid at the large entity rate.

Inquiries related to this communication should be directed to the Office of Petitions Staff at (571) 272-3282.

Sherry D. Brinkley
Petitions Examiner
Office of Petitions

UNITED STATES PATENT AND TRADEMARK OFFICE

COMMISSIONER FOR PATENTS
UNITED STATES PATENT AND TRADEMARK OFFICE
P.O. BOX 1450
ALEXANDRIA, VA 22313-1450
www.uspto.gov

JJGJr: 08-03

Paper No: 4

BROWN, MARTIN,
HALLER & MCCLAIN LLP
1660 UNION STREET
SAN DIEGO CA 92101-2926

COPY MAILED
AUG 0 8 2003
OFFICE OF PETITIONS

In re Application of :
Phillips :
Application No. 10/388,032 : DECISION ON PETITION
Filed: 12 March, 2003 :
Attorney Docket No.: 8304-PA01 :

This is a decision on the petition filed on 13 June, 2003, and considered under 37 C.F.R. §1.53,[1]

---

[1] The regulations at 37 C.F.R. §1.53 provide, in pertinent part:

§ 1.53 Application number, filing date, and completion of application.

(a) *Application number.* Any papers received in the Patent and Trademark Office which purport to be an application for a patent will be assigned an application number for identification purposes.

(b) *Application filing requirements - Nonprovisional application.* The filing date of an application for patent filed under this section, except for a provisional application under paragraph (c) of this section or a continued prosecution application under paragraph (d) of this section, is the date on which a specification as prescribed by 35 U.S.C. 112 containing a description pursuant to § 1.71 and at least one claim pursuant to §1.75, and any drawing required by § 1.81(a) are filed in the Patent and Trademark Office. No new matter may be introduced into an application after its filing date. A continuing application, which may be a continuation, divisional, or continuation-in-part application, may be filed under the conditions specified in 35 U.S.C. 120, 121 or 365(c) and § 1.78(a).

(1) A continuation or divisional application that names as inventors the same or fewer than all of the inventors named in the prior application may be filed under this paragraph or paragraph (d) of this section.

(2) A continuation-in-part application (which may disclose and claim subject matter not disclosed in the prior application) or a continuation or divisional application naming an inventor not named in the prior application must be filed under this paragraph.

* * *

(e) *Failure to meet filing date requirements.*

(1) If an application deposited under paragraph (b), (c), or (d) of this section does not meet the requirements of such paragraph to be entitled to a filing date, applicant will be so notified, if a correspondence address has been provided, and given a time period within which to correct the filing error.

(2) Any request for review of a notification pursuant to paragraph (e)(1) of this section, or a notification that the original application papers lack a portion of the specification or drawing(s), must be by way of a petition pursuant to this paragraph accompanied by the fee set forth in § 1.17(h). In the absence of a timely (§ 1.181(f)) petition pursuant to this paragraph, the filing date of an application in which the applicant was notified of a filing error pursuant to paragraph (e)(1) of this section will be the date the filing error is corrected.

(3) If an applicant is notified of a filing error pursuant to paragraph (e)(1) of this section, but fails to correct the filing error within the given time period or otherwise timely (§ 1.181(f)) take action pursuant to this paragraph, proceedings in the application will be considered terminated. Where proceedings in an application are terminated pursuant to this paragraph, the application may be disposed of, and any filing fees, less the handling fee set forth in § 1.21(n), will be refunded.

(f) *Completion of application subsequent to filing— nonprovisional (including continued prosecution or reissue) application.*

(1) If an application which has been accorded a filing date pursuant to paragraph (b) or (d) of this section does not include the basic filing fee, or if an application which has been accorded a filing date pursuant to paragraph (b) of this section does not include an oath or declaration by the applicant pursuant to §§ 1.63,1.162 or § 1.175, and applicant has provided a correspondence address (§ 1.33(a)), applicant will be notified and given a period of time within which to pay the filing fee, file an oath or declaration in an application under paragraph (b) of this section, and pay the surcharge required by § 1.16(e) to avoid abandonment.

seeking to have a filing date of 12 March, 2003, accorded to page 13 of the application.

A review of the record indicates that:

- the instant application was deposited on 12 March, 2003;
- on 13 May, 2003, the Office mailed a "Notice of Omitted Item(s) in a Nonprovisional Application" indicating that page 13 of the specification (description and claims) appeared to be missing from the application, and Petitioner either could accept the filing date of 12 March, 2003, without page 13 of the specification (description and claims) of the application, or submit within two (2) months page 13 of the specification (description and claims) of the application with a petition for its inclusion and accept the date of filing of that submission and petition;
- on 13 June, 2003, Petitioner filed the instant petition (with authorization in the amount of $130.00 for the petition fee) and, *inter alia*, a document purporting to be a copy page 13 of the specification (description and claims) previously indicated to have been omitted, a copy of a date stamped ("3/12/03" containing also the application number and bar code) receipt card (see: MPEP §503[2]) setting forth that the following items were filed among

---

(2) If an application which has been accorded a filing date pursuant to paragraph (b) of this section does not include the basic filing fee or an oath or declaration by the applicant pursuant to §§ 1.63, 1.162 or §1.175, and applicant has not provided a correspondence address (§ 1.33(a)), applicant has two months from the filing date of the application within which to pay the basic filing fee, file an oath or declaration, and pay the surcharge required by § 1.16(e) to avoid abandonment.

(3) This paragraph applies to continuation or divisional applications under paragraphs (b) or (d) of this section and to continuation-in-part applications under paragraph (b) of this section.

(4) See § 1.63(d) concerning the submission of a copy of the oath or declaration from the prior application for a continuation or divisional application under paragraph (b) of this section.

(5) If applicant does not pay one of the basic filing or the processing and retention fees (§ 1.21(l)) during the pendency of the application, the Office may dispose of the application.

* * *

(h) *Subsequent treatment of application - Nonprovisional (including continued prosecution) application*. An application for a patent filed under paragraphs (b) or (d) of this section will not be placed on the files for examination until all its required parts, complying with the rules relating thereto, are received, except that certain minor informalities may be waived subject to subsequent correction whenever required.

(l) *Subsequent treatment of application - Provisional application*. A provisional application for a patent filed under paragraph (c) of this section will not be placed on the files for examination and will become abandoned no later than twelve months after its filing date pursuant to 35 U.S.C. 111(b)(1).

* * *

[48 Fed. Reg. 2709, Jan. 20, 1983, effective Feb. 27, 1983; paras. (b) and (d), 49 Fed. Reg. 554, Jan. 4, 1984, effective Apr. 1, 1984; para. (c), 50 Fed. Reg. 31826, Aug. 6, 1985, effective Oct. 5, 1985; paras. (c) and (d), 53 Fed. Reg. 47808, Nov. 28, 1988, effective Jan. 1, 1989; paras. (b) and (c), 54 Fed. Reg. 47518, Nov. 15, 1989, effective Jan. 16, 1990; paras. (a)-(e) revised, 60 Fed. Reg. 20195, Apr. 25, 1995, effective June 8, 1995; revised, 62 Fed. Reg. 53131, Oct. 10 ,1997, effective Dec. 1, 1997; para. (d) revised, 63 Fed. Reg. 5734, Feb. 4, 1998, effective Feb. 4, 1998 (adopted as final, 63 Fed. Reg. 36184, Jul. 2, 1998); paras. (c)(3), (c)(4) and (d) revised, 65 Fed. Reg. 14865, Mar. 20, 2000, effective May 29, 2000 (paras. (c)(4) and (d) adopted as final, 65 Fed. Reg. 50092, Aug. 16, 2000); para. (c)(3) revised, 65 Fed. Reg. 50092, Aug. 16, 2000, effective Aug. 16, 2000; paras. (c)(1), (c)(2), (d)(4), (e)(2), (f), and (g) revised and para. (d)(10) added, 65 Fed. Reg. 54604, Sept. 8, 2000, effective Nov. 7, 2000; para. (c)(4) revised, 65 Fed. Reg. 78958, Dec. 18, 2000]

[2] The commentary at MPEP §503 provides in pertinent part:

§503 Application Number and Filing Receipt

37 C.F.R. §1.54. Parts of application to be filed together; filing receipt.

(a) It is desirable that all parts of the complete application be deposited in the Office together; otherwise, a letter must accompany each part, accurately and clearly connecting it with the other parts of the application. See § 1.53(f) and (g) with regard to completion of an application.

the pages of the specification (description and claims) and received by the Office: "utility patent appln (sic) transmittal (1 p.); fee transmittal (in dupl. 2 pp.); declaration (2 pp.); power of attorney (1 p.); specification (17 pp.); check for $375; return envelope (sic)."

Because the return postcard receipt properly itemizes the contents of the application package in accordance with MPEP §503, the Office concludes that Page 13 of the specification (description and claims) was subsequently misplaced in the Office.

Accordingly, the petition under 37 C.F.R. §1.53 is **granted**.[3]

The Notice mailed on 13 May, 2003, hereby is withdrawn as to Page 13 of the specification

---

* * *

If a self-addressed postcard is submitted with a patent application, that postcard will be provided with both the receipt date and application number prior to returning it to the addressee. The application number identified on such a postcard receipt is merely the preliminary assignment of an application number to the application, and should not be relied upon (e.g., with respect to foreign filings) as necessarily representing the application number assigned to such application. See 37 C.F.R. 1.53(b). The identifying data on the postcard should include:
(A) applicant's name(s);
(B) title of invention;
© number of pages of specification, claims (for nonprovisional applications), and sheets of drawing;
(D) whether oath or declaration is included;
(E) a list of any additional forms included with the application (e.g., application transmittal form, application data sheet, fee transmittal form, and/or provisional application cover sheet); and
(F) amount and manner of paying the fee.
A return postcard should be attached to *each* patent application for which a receipt is desired. It is important that the return postcard itemize all of the components of the application. If the postcard does not itemize each of the components of the application, it will not serve as evidence that any component which was not itemized was received by the United States Patent and Trademark Office (USPTO).

* * *

RETURN POSTCARD

If a receipt of any item (e.g., paper or fee) filed in the USPTO is desired, it may be obtained by enclosing with the paper a self-addressed postcard specifically identifying the item. The USPTO will stamp the receipt date on the postcard and place it in the outgoing mail. A postcard receipt which itemizes and properly identifies the items which are being filed serves as *prima facie* evidence of receipt in the USPTO of all the items listed thereon on the date stamped thereon by the USPTO.

The identifying data on the postcard should be so complete as to clearly identify the item for which receipt is requested. For example, the postcard should identify the applicant's name, application number (if known), confirmation number (if known), filing date, interference number, title of the invention, etc. The postcard should also identify the type of paper being filed, e.g., new application, affidavit, amendment, notice of appeal, appeal brief, drawings, fees, motions, supplemental oath or declaration, petition, etc., and the number of pages being submitted. If a new application is being filed, all parts of the application being submitted should be separately listed on the postcard, e.g., the number of pages of specification (including written description, claims and abstract), number of claims, number of sheets of drawings, number of pages of oath/declaration, number of pages of cover sheet (provisional application). The postcard receipt will not serve as *prima facie* evidence of receipt of any item which is not adequately itemized on the postcard. For example, merely listing on the postcard "a complete application" or "patent application" will not serve as a proper receipt for each of the required components of an application (e.g., specification (including claims), drawings (if necessary), oath or declaration and the application filing fee) or missing portions (e.g., pages, sheets of drawings) of an application if one of the components or portion of a component is found to be missing by the USPTO. Each separate component should be specifically and properly itemized on the postcard. Furthermore, merely incorporating by reference in the postcard receipt, the items listed in a transmittal letter will not serve as *prima facie* evidence of receipt of those items.

The person receiving the item(s) in the USPTO will check the listing on the postcard against the item(s) being filed to be sure they are properly identified and that all the items listed on the postcard are presently being submitted to the USPTO. If any of the items listed on the postcard are not being submitted to the USPTO, those items will be crossed off and the post-card initialed by the person receiving the items.

Upon return of a postcard receipt from the USPTO, the postcard receipt should be promptly reviewed by the person who filed the items to ensure that every item specifically denoted on the postcard was received by the USPTO. If the postcard receipt has been annotated to indicate that a particular item denoted on the postcard was not received by the USPTO, the postcard receipt will not serve as *prima facie* evidence of receipt of that item in the USPTO.

[3] Pursuant to Petitioner's authorization, the petition fee ($130.00) is being credited to Deposit Account 02-4070.

(description and claims) as described in the specification.

This application is being forwarded to the Office of Initial Patent Examination for further processing with a filing date of 12 March, 2003, using:

- Pages 1 - 12 and 14-17 of specification (description and claims) filed on 12 March, 2003; and

- Page 13 of the specification (description and claims), supplied on 13 June, 2003, with an indication on the PALM bib data sheet that 17 pages of the specification (description, claims and abstract) were present on filing.

Telephone inquiries concerning this decision may be directed to the undersigned at (703) 305-9199.

John J. Gillon, Jr.
Senior Attorney
Office of Petitions

UNITED STATES PATENT AND TRADEMARK OFFICE

Commissioner for Patents
United States Patent and Trademark Office
P.O. Box 1450
Alexandria, VA 22313-1450
www.uspto.gov

AUG - 2 2005

Charles W. Chandler
33150 Schoolcraft
Livonia, MI 48150

In re application of	:	
John P. Hughes, Jr.	:	
Application No. 10/388,034	:	DECISION ON PETITION
Filed: March 12, 2003	:	FOR THE ACCEPTANCE
For: BASEMENT WALL CONSTRUCTION	:	OF LATE PAPERS

This is in response to the Petition To Accept Timely Filed Papers filed November 16, 2004. There is no fee required for this petition.

The petition is **GRANTED**.

A review of the file record reveals that a response to the Office action of March 25, 2004 was timely filed on June 23, 2004. Applicant's post card receipt accompanying the response bears the Patent Office stamp of June 23, 2004.

Since the error is on the part of the Office, the late papers will be accepted. The application has being forwarded to the examiner and appropriate action has been taken.

Randolph A. Reese
Special Programs Examiner
Patent Technology Center 3600
(571) 272-6619

RAR/js: 7/29/05

UNITED STATES PATENT AND TRADEMARK OFFICE

Commissioner for Patents
United States Patent and Trademark Office
P.O. Box 1450
Alexandria, VA 22313-1450
www.uspto.gov

Paper No.

COPY MAILED

APR 1 3 2004

OFFICE OF PETITIONS

Kimton N. Eng, Esq.
DORSEY & WHITNEY LLP
1420 Fifth Avenue, Suite 3400
Seattle WA 98101

In re Application of
Christophe J. Chevallier, et al.
Application No. 10/388,058
Filed: March 12, 2003
Attorney Docket No. 501109.03

ON PETITION

This is a decision on the petition, filed April 9, 2004, under 37 CFR(c)(2) to withdraw the above-identified application from issue after payment of the issue fee.

The petition is **GRANTED**.

The above-identified application is withdrawn from issue for consideration of a submission under 37 CFR 1.114 (request for continued examination). See 37 CFR 1.313(c)(2).

Petitioner is advised that the issue fee paid on March 15, 2004, in the above-identified application cannot be refunded. If, however, the above-identified application is again allowed, petitioner may request that it be applied towards the issue fee required by the new Notice of Allowance. [1]

Telephone inquiries relating to this decision should be directed to the undersigned at (703) 305-9220.

The application is being forwarded to Technology Center AU 2838 for further processing of the request for continued examination under 37 CFR 1.114.

Sherry D. Brinkley
Petitions Examiner
Office of Petitions
Office of the Deputy Commissioner
for Patent Examination Policy

[1]The request to apply the issue fee to the new Notice may be satisfied by completing and returning the new Issue Fee Transmittal Form PTOL-85(b), which includes the following language thereon: "Commissioner for Patents is requested to apply the Issue Fee and Publication Fee (if any) or re-apply any previously paid issue fee to the application identified above." Petitioner is advised that, whether a fee is indicted as being due or not, the Issue Fee Transmittal Form **must** be completed and timely submitted to avoid abandonment. Note the language on bold text on the first page of the Notice of Allowance and Fee(s) Due (PTOL-85).

SPE: M. Lee

SPE RESPONSE FOR CERTIFICATE OF CORRECTION

Paper No.: _____

DATE : 7/9/07

TO SPE OF : ART UNIT 2876

SUBJECT : Request for Certificate of Correction for Appl. No.: 10/388,062 Patent No.: 6843423

Please respond to this request for a certificate of correction within 7 days.

Please review the requested changes/corrections as shown in the **COCIN** document(s) in the IFW application image. No new matter should be introduced, nor should the scope or meaning of the claims be changed.

Please complete the response (see below) and forward the completed response to scanning using document code **COCX**.

Lamonte M. Newsome
Certificates of Correction Branch
703-308-9390 ext. 112

Thank You For Your Assistance

The request for issuing the above-identified correction(s) is hereby:

Note your decision on the appropriate box.

- ☑ **Approved** — All changes apply.
- ☐ **Approved in Part** — Specify below which changes **do not** apply.
- ☐ **Denied** — State the reasons for denial below.

Comments: The Formal Drawings and any typographical errors are approved by the examiner, and the above subject matter does not introduce any new issues/matter.

SPE
MICHAEL G. LEE
SUPERVISORY PATENT EXAMINER
TECHNOLOGY CENTER 2800

2876
Art Unit

PTOL-306 (REV. 7/03)

U.S. DEPARTMENT OF COMMERCE Patent and Trademark Office

10/388067

C7/C

OIPE IAP28
JUN 25 2007
PATENT & TRADEMARK OFFICE

IN THE UNITED STATES PATENT AND TRADEMARK OFFICE

In re U.S. Patent No. **6,843,423 B2**)
FRUHAUF ET AL.)
)
Issued: **JANUARY 18, 2005**)
)
For: **SMART CARD THAT CAN BE**)
CONFIGURED FOR DEBUGGING AND)
SOFTWARE DEVELOPMENT USING)
SECONDARY COMMUNICATION PORT)
)

O/C to chkr 7-31-07

Certificate
JUN 28 2007
of Correction

REQUEST FOR CERTIFICATE OF CORRECTION OF APPLICANT'S MISTAKE UNDER RULE 1.323

U.S. Patent and Trademark Office
P.O. Box 1450
Alexandria, VA 22313-1450

Sir:

In accordance with the provisions of Rule 1.323 of the Rules of Practice, the Patent Office is respectfully requested to correct matters in the above-identified patent in accordance with the Certificate of Correction Form PTO-1050 attached hereto.

The Patent Office is requested to issue a Certificate of Correction on the above-referenced Patent Document, and to place such a Certificate of Correction in the file, so that such will appear on any copies of the patent which are ordered in the future.

The corrections being made are of consequence to provide the proper figures in the drawings, as well as the proper recitation in the specification and claims. Formal drawings were filed on April 7, 2003, and were not printed on the patent. Several of the mistakes occurred in good faith and are not the fault of the Patent and Trademark Office. However,

06/25/2007 HDESTA1 00000035 6843423
01 FC:1811 100.00 OP

JUN 28 2007

SPE RESPONSE FOR CERTIFICATE OF CORRECTION

Paper No.: _____

DATE : 11/07/08

TO SPE OF : ART UNIT 2887

SUBJECT : Request for Certificate of Correction for Appl. No.: 10388067 Patent No.: 6843423 B2

Please respond to this request for a certificate of correction within 7 days.

FOR IFW FILES:

Please review the requested changes/corrections as shown in the **COCIN** document(s) in the IFW application image. No new matter should be introduced, nor should the scope or meaning of the claims be changed.

Please complete the response (see below) and forward the completed response to scanning using document code **COCX**.

FOR PAPER FILES:

Please review the requested changes/corrections as shown in the attached certificate of correction. Please complete this form (see below) and forward it with the file to:

Certificates of Correction Branch (CofC)
South Tower - 9A22
Palm Location 7580
[redacted]

_____
Certificates of Correction Branch
703-308-9390 ext. _____

Thank You For Your Assistance

The request for issuing the above-identified correction(s) is hereby:
Note your decision on the appropriate box.

X Approved	All changes apply.
☐ Approved in Part	Specify below which changes do not apply.
☐ Denied	State the reasons for denial below.

Comments: The Request for Certificate of Correction filed 18 November, 2008 has been reviewed and approved.

Steven Paik 2887

SPE Art Unit

PTOL-306 (REV. 7/03) U.S. DEPARTMENT OF COMMERCE Patent and Trademark Office

Deleted: 2876

Formatted: Indent: Left: 1.22"

Formatted: Left, Indent: Left: 0", First line: 0", Line spacing: Double, Tabs: Not at 2.08"

Deleted: ¶

Deleted:

Deleted:

Deleted:

Deleted: . ¶

SPE RESPONSE FOR CERTIFICATE OF CORRECTION

Paper No.: _____

DATE : 11/07/08

TO SPE OF : ART UNIT ~~2876~~ 2887

SUBJECT : Request for Certificate of Correction for Appl. No.: 10388067 Patent No.: 6843423 B2

Please respond to this request for a certificate of correction within 7 days.

FOR IFW FILES:

Please review the requested changes/corrections as shown in the **COCIN** document(s) in the IFW application image. No new matter should be introduced, nor should the scope or meaning of the claims be changed.

Please complete the response (see below) and forward the completed response to scanning using document code **COCX**.

FOR PAPER FILES:

Please review the requested changes/corrections as shown in the attached certificate of correction. Please complete this form (see below) and forward it with the file to:

Certificates of Correction Branch (CofC)
South Tower - 9A22
Palm Location 7580
You can fax the Directors/SPE response to 571-270-9990

_____
Certificates of Correction Branch
703-308-9390 ext. _____

Thank You For Your Assistance

The request for issuing the above-identified correction(s) is hereby:
Note your decision on the appropriate box.

- ☒ **Approved** — **All** changes apply.
- ☐ **Approved in Part** — Specify below which changes **do not** apply.
- ☐ **Denied** — State the reasons for denial below.

Comments: The Request for Certificate of Correction filed 18 November 2008 has been reviewed and approved.

Steven S. Paik /STEVEN S. PAIK/SPE 2887

SPE RESPONSE FOR CERTIFICATE OF CORRECTION

SPE

Art Unit

UNITED STATES PATENT AND TRADEMARK OFFICE

COMMISSIONER FOR PATENTS
UNITED STATES PATENT AND TRADEMARK OFFICE
P.O. BOX 1450
ALEXANDRIA, VA 22313-1450
WWW.USPTO.GOV

Paper No.

William J. McGinnis, Jr.
IBM Corporation, Dept. 917
3605 Highway 52 North
Rochester MN 55901-7829

COPY MAILED

MAR 16 2009

OFFICE OF PETITIONS

In re Application of Richard D. Dettinger et al. Application No. 10/388,075 Filed: March 13, 2003 Attorney Docket No.: ROC920020196US1 Title: USAGE-BASED OPTIMIZATION OF NETWORK TRAFFIC AND DATA WAREHOUSE SIZE	DECISION ON PETITION UNDER 37 C.F.R. § 1.181

This is a decision on the petition filed on February 18, 2009, pursuant to 37 C.F.R. § 1.181, requesting that the holding of abandonment in the above-identified application be withdrawn.

BACKGROUND

A notice of appeal was filed on January 23, 2007, along with a two-month extension of time. An amendment was filed on March 6, 2007, with a supplemental amendment provided on March 13, 2007. On May 25, 2007, the Office mailed an Interview Summary, and on June 25, 2007, Applicants submitted an Interview Summary. No appeal brief was received, and no extensions of time under the provisions of 37 C.F.R. § 1.136(a) were requested. Consequently, the above-identified application became abandoned on March 24, 2007. A notice of abandonment was mailed on April 18, 2008.

RELEVANT PORTIONS OF THE C.F.R. AND M.P.E.P.

37 C.F.R. § 1.2 sets forth, *in toto*:

> All business with the Patent and Trademark Office should be transacted in writing. The personal attendance of applicants or

their attorneys or agents at the Patent and Trademark Office is unnecessary. The action of the Patent and Trademark Office will be based exclusively on the written record in the Office. No attention will be paid to any alleged oral promise, stipulation, or understanding in relation to which there is disagreement or doubt.

37 C.F.R. § 1.134 sets forth, *in toto*:

An Office action will notify the applicant of any non-statutory or shortened statutory time period set for reply to an Office action. Unless the applicant is notified in writing that a reply is required in less than six months, a maximum period of six months is allowed.

37 C.F.R. § 1.135 sets forth, *in toto*:

(a) If an applicant of a patent application fails to reply within the time period provided under § 1.134 and § 1.136, the application will become abandoned unless an Office action indicates otherwise.
(b) Prosecution of an application to save it from abandonment pursuant to paragraph (a) of this section must include such complete and proper reply as the condition of the application may require. The admission of, or refusal to admit, any amendment after final rejection or any amendment not responsive to the last action, or any related proceedings, will not operate to save the application from abandonment.
(c) When reply by the applicant is a bona fide attempt to advance the application to final action, and is substantially a complete reply to the non-final Office action, but consideration of some matter or compliance with some requirement has been inadvertently omitted, applicant may be given a new time period for reply under § 1.134 to supply the omission.

37 C.F.R. §§ 1.114(a) and (b) set forth, *in toto*:

(a) If prosecution in an application is closed, an applicant may request continued examination of the application by filing a submission and the fee set forth in § 1.17(e) prior to the earliest of:

(1) Payment of the issue fee, unless a petition under § 1.313 is granted;
(2) Abandonment of the application; or
(3) The filing of a notice of appeal to the U.S. Court of Appeals for the Federal Circuit under 35 U.S.C. 141, or the commencement of a civil action under 35 U.S.C. 145 or 146, unless the appeal or civil action is terminated.

(b) Prosecution in an application is closed as used in this section means that the application is under appeal, or that the last Office action is a final action (§ 1.113), a notice of

allowance (§ 1.311), or an action that otherwise closes prosecution in the application.

37 C.F.R. §§ 41.37 (a) and (b) set forth, *in toto*:

(a)(1) Appellant must file a brief under this section within two months from the date of filing the notice of appeal under § 41.31. (2) The brief must be accompanied by the fee set forth in § 41.20(b)(2)

(b) On failure to file the brief, accompanied by the requisite fee, within the period specified in paragraph (a) of this section, the appeal will stand dismissed.

Section 1206(I) of the MPEP sets forth, *in pertinent part*:

Amendments filed after the filing of a notice of appeal, but prior to the date of filing a brief, may be admitted only to:
(A) cancel claims;
(B) comply with any requirement of form expressly set forth in a previous action;
(C) present rejected claims in better form for consideration on appeal; or
(D) amend the specification or claims upon a showing of good and sufficient reasons why the amendment is necessary and was not earlier presented. See 37 CFR 41.33(a).

ANALYSIS

With this petition, Applicants have asserted that the holding of abandonment is erroneous, because

"an amendment was submitted on March 6, 2007 pursuant to interviews with the Examiner…the amendment placed the application in condition for allowance. Examiner Sam Rimell officially stated in the Interview Summary dated May 25, 2007 that the amendment overcame all outstanding rejections and <u>was</u> (emphasis added) approved for entry."

Petition, page 1.

This assertion is inaccurate. The Interview Summary indicates that the amendment "will be" approved for entry: the communication does not indicate that the amendment had been (*i.e.*, was) approved for entry by the Examiner.

Applicants assert that they "received affirmations from Examiner Rimell that a Notice of Allowance would be forthcoming,"[1] however Applicants are reminded that they cannot rely on any assurance that has not been reduced to writing.

1 Petition, page 1.

The Interview Summary indicates the amended claims

> "will be approved for entry and does overcome all the outstanding issues raised in the office action of August 23, 2006. A search update will be performed to determine if any additional prior art issues remain, although all current prior art issues have been overcome."

Amendments filed after the filing of a notice of appeal are not entered as a matter of right.[2] It is noted that the Interview Summary does not expressly indicate that the amendment placed the application in *prima facie* condition for allowance. It follows that the amendment did not toll the time period for the filing of the Appeal Brief, and this application went abandoned by operation of law for failure to timely submit the Appeal Brief and the required fee (or a Request for Continued Examination[3] along with the required fee).

The record does not support a finding that the holding of abandonment should be withdrawn. As such, this petition must be **DISMISSED.**

Any reply must be submitted within **TWO MONTHS** from the mail date of this decision. Extensions of time under 37 C.F.R. § 1.136(a) are permitted. The reply should include a cover letter entitled "Renewed Petition Under 37 C.F.R. § 1.181(a)." This is not a final agency action within the meaning of 5 U.S.C § 704.

The renewed petition should indicate in a prominent manner that the attorney handling this matter is Paul Shanoski, and may be submitted by mail,[4] hand-delivery,[5] or facsimile.[6] Registered users of EFS-Web may alternatively submit a response to this decision via EFS-Web.[7]

Alternatively, since it does not appear that Applicants are in a position to establish that the holding of abandonment should be withdrawn, Applicants may wish to consider filing a petition under 37 C.F.R. §§ 1.137(a) and/or (b).

It is noted that the address listed on the petition differs from the address of record. The application file does not indicate a change of correspondence address has been filed in this case,

---

2 See MPEP § 1206.
3 The amendment of March 6, 2007 could have served as the submission as described in 37 C.F.R. §§ 1.114(c) and (d).
4 Mail Stop Petition, Commissioner for Patents, United States Patent and Trademark Office, P.O. Box 1450, Alexandria, VA, 22313-1450.
5 Customer Window, Randolph Building, 401 Dulaney Street, Alexandria, VA, 22314.
6 (571) 273-8300- please note this is a central facsimile number.
7 https://sportal.uspto.gov/authenticate/authenticateuserlocalepf.html

although the address given on the petition differs from the address of record. If Applicants desire to receive future correspondence regarding this application, the change of correspondence address must be submitted. A courtesy copy of this decision will be mailed to Applicants. However, all future correspondence will be directed to the address of record until such time as appropriate instructions are received to the contrary. Applicants will not receive future correspondence related to this application unless Change of Correspondence Address, Patent Form (PTO/SB/122) is submitted for the above-identified application. For Applicants' convenience, a blank Change of Correspondence Address, Patent Form (PTO/SB/122), may be found at http://www.uspto.gov/web/forms/sb0122.pdf.

Telephone inquiries regarding *this decision* should be directed to the undersigned at (571) 272-3225.[8] All other inquiries concerning examination procedures or status of the application should be directed to the Technology Center.

/Paul Shanoski/
Paul Shanoski
Senior Attorney
Office of Petitions

cc: Gero G. McClellan
Patterson & Sheridan, L.L.P.
3040 Post Oak Blvd, Suite 1500
Houston, TX 77056

---

8 Applicants will note that all practice before the Office should be in writing, and the action of the Office will be based exclusively on the written record in the Office. See 37 C.F.R. § 1.2. As such, Applicants are reminded that no telephone discussion may be controlling or considered authority for Applicants' further action(s).

UNITED STATES PATENT AND TRADEMARK OFFICE

COMMISSIONER FOR PATENTS
UNITED STATES PATENT AND TRADEMARK OFFICE
P.O. BOX 1450
ALEXANDRIA, VA 22313-1450
WWW.USPTO.GOV

Paper No.

William J. McGinnis, Jr.
IBM Corporation, Dept. 917
3605 Highway 52 North
Rochester MN 55901-7829

In re Application of Richard D. Dettinger et al. Application No. 10/388,075 Filed: March 13, 2003 Attorney Docket No.: ROC920020196US1 Title: USAGE-BASED OPTIMIZATION OF NETWORK TRAFFIC AND DATA WAREHOUSE SIZE	DECISION ON PETITION UNDER 37 C.F.R. § 1.181

This is a decision on the petition filed on February 18, 2009, pursuant to 37 C.F.R. § 1.181, requesting that the holding of abandonment in the above-identified application be withdrawn.

BACKGROUND

A notice of appeal was filed on January 23, 2007, along with a two-month extension of time. An amendment was filed on March 6, 2007, with a supplemental amendment provided on March 13, 2007. On May 25, 2007, the Office mailed an Interview Summary, and on June 25, 2007, Applicants submitted an Interview Summary. No appeal brief was received, and no extensions of time under the provisions of 37 C.F.R. § 1.136(a) were requested. Consequently, the above-identified application became abandoned on March 24, 2007. A notice of abandonment was mailed on April 18, 2008.

RELEVANT PORTIONS OF THE C.F.R. AND M.P.E.P.

37 C.F.R. § 1.2 sets forth, *in toto*:

> All business with the Patent and Trademark Office should be transacted in writing. The personal attendance of applicants or

their attorneys or agents at the Patent and Trademark Office is unnecessary. The action of the Patent and Trademark Office will be based exclusively on the written record in the Office. No attention will be paid to any alleged oral promise, stipulation, or understanding in relation to which there is disagreement or doubt.

37 C.F.R. § 1.134 sets forth, *in toto*:

An Office action will notify the applicant of any non-statutory or shortened statutory time period set for reply to an Office action. Unless the applicant is notified in writing that a reply is required in less than six months, a maximum period of six months is allowed.

37 C.F.R. § 1.135 sets forth, *in toto*:

(a) If an applicant of a patent application fails to reply within the time period provided under § 1.134 and § 1.136, the application will become abandoned unless an Office action indicates otherwise.
(b) Prosecution of an application to save it from abandonment pursuant to paragraph (a) of this section must include such complete and proper reply as the condition of the application may require. The admission of, or refusal to admit, any amendment after final rejection or any amendment not responsive to the last action, or any related proceedings, will not operate to save the application from abandonment.
(c) When reply by the applicant is a bona fide attempt to advance the application to final action, and is substantially a complete reply to the non-final Office action, but consideration of some matter or compliance with some requirement has been inadvertently omitted, applicant may be given a new time period for reply under § 1.134 to supply the omission.

37 C.F.R. §§ 1.114(a) and (b) set forth, *in toto*:

(a) If prosecution in an application is closed, an applicant may request continued examination of the application by filing a submission and the fee set forth in § 1.17(e) prior to the earliest of:

(1) Payment of the issue fee, unless a petition under § 1.313 is granted;
(2) Abandonment of the application; or
(3) The filing of a notice of appeal to the U.S. Court of Appeals for the Federal Circuit under 35 U.S.C. 141, or the commencement of a civil action under 35 U.S.C. 145 or 146, unless the appeal or civil action is terminated.

(b) Prosecution in an application is closed as used in this section means that the application is under appeal, or that the last Office action is a final action (§ 1.113), a notice of

allowance (§ 1.311), or an action that otherwise closes prosecution in the application.

37 C.F.R. §§ 41.37 (a) and (b) set forth, *in toto*:

(a)(1) Appellant must file a brief under this section within two months from the date of filing the notice of appeal under § 41.31. (2) The brief must be accompanied by the fee set forth in § 41.20(b)(2)

(b) On failure to file the brief, accompanied by the requisite fee, within the period specified in paragraph (a) of this section, the appeal will stand dismissed.

Section 1206(I) of the MPEP sets forth, *in pertinent part*:

Amendments filed after the filing of a notice of appeal, but prior to the date of filing a brief, may be admitted only to:
(A) cancel claims;
(B) comply with any requirement of form expressly set forth in a previous action;
(C) present rejected claims in better form for consideration on appeal; or
(D) amend the specification or claims upon a showing of good and sufficient reasons why the amendment is necessary and was not earlier presented. See 37 CFR 41.33(a).

ANALYSIS

With this petition, Applicants have asserted that the holding of abandonment is erroneous, because

"an amendment was submitted on March 6, 2007 pursuant to interviews with the Examiner…the amendment placed the application in condition for allowance. Examiner Sam Rimell officially stated in the Interview Summary dated May 25, 2007 that the amendment overcame all outstanding rejections and was (emphasis added) approved for entry."

Petition, page 1.

This assertion is inaccurate. The Interview Summary indicates that the amendment "will be" approved for entry: the communication does not indicate that the amendment had been (*i.e.*, was) approved for entry by the Examiner.

Applicants assert that they "received affirmations from Examiner Rimell that a Notice of Allowance would be forthcoming,"[1] however Applicants are reminded that they cannot rely on any assurance that has not been reduced to writing.

1 Petition, page 1.

The Interview Summary indicates the amended claims

> "will be approved for entry and does overcome all the outstanding issues raised in the office action of August 23, 2006. A search update will be performed to determine if any additional prior art issues remain, although all current prior art issues have been overcome."

Amendments filed after the filing of a notice of appeal are not entered as a matter of right.[2] It is noted that the Interview Summary does not expressly indicate that the amendment placed the application in *prima facie* condition for allowance. It follows that the amendment did not toll the time period for the filing of the Appeal Brief, and this application went abandoned by operation of law for failure to timely submit the Appeal Brief and the required fee (or a Request for Continued Examination[3] along with the required fee).

The record does not support a finding that the holding of abandonment should be withdrawn. As such, this petition must be **DISMISSED.**

Any reply must be submitted within **TWO MONTHS** from the mail date of this decision. Extensions of time under 37 C.F.R. § 1.136(a) are permitted. The reply should include a cover letter entitled "Renewed Petition Under 37 C.F.R. § 1.181(a)." This is not a final agency action within the meaning of 5 U.S.C § 704.

The renewed petition should indicate in a prominent manner that the attorney handling this matter is Paul Shanoski, and may be submitted by mail,[4] hand-delivery,[5] or facsimile.[6] Registered users of EFS-Web may alternatively submit a response to this decision via EFS-Web.[7]

Alternatively, since it does not appear that Applicants are in a position to establish that the holding of abandonment should be withdrawn, Applicants may wish to consider filing a petition under 37 C.F.R. §§ 1.137(a) and/or (b).

It is noted that the address listed on the petition differs from the address of record. The application file does not indicate a change of correspondence address has been filed in this case,

---

2 See MPEP § 1206.
3 The amendment of March 6, 2007 could have served as the submission as described in 37 C.F.R. §§ 1.114(c) and (d).
4 Mail Stop Petition, Commissioner for Patents, United States Patent and Trademark Office, P.O. Box 1450, Alexandria, VA, 22313-1450.
5 Customer Window, Randolph Building, 401 Dulaney Street, Alexandria, VA, 22314.
6 (571) 273-8300- please note this is a central facsimile number.
7 https://sportal.uspto.gov/authenticate/authenticateuserlocalepf.html

although the address given on the petition differs from the address of record. If Applicants desire to receive future correspondence regarding this application, the change of correspondence address must be submitted. A courtesy copy of this decision will be mailed to Applicants. However, all future correspondence will be directed to the address of record until such time as appropriate instructions are received to the contrary. Applicants will not receive future correspondence related to this application unless Change of Correspondence Address, Patent Form (PTO/SB/122) is submitted for the above-identified application. For Applicants' convenience, a blank Change of Correspondence Address, Patent Form (PTO/SB/122), may be found at http://www.uspto.gov/web/forms/sb0122.pdf.

Telephone inquiries regarding *this decision* should be directed to the undersigned at (571) 272-3225.[8] All other inquiries concerning examination procedures or status of the application should be directed to the Technology Center.

/Paul Shanoski/
Paul Shanoski
Senior Attorney
Office of Petitions

cc: Gero G. McClellan
Patterson & Sheridan, L.L.P.
3040 Post Oak Blvd, Suite 1500
Houston, TX 77056

---

8 Applicants will note that all practice before the Office should be in writing, and the action of the Office will be based exclusively on the written record in the Office. See 37 C.F.R. § 1.2. As such, Applicants are reminded that no telephone discussion may be controlling or considered authority for Applicants' further action(s).

UNITED STATES PATENT AND TRADEMARK OFFICE

Commissioner for Patents
United States Patent and Trademark Office
P.O. Box 1450
Alexandria, VA 22313-1450
www.uspto.gov

Paper No.

COPY MAILED

JUN 09 2009

OFFICE OF PETITIONS

William J. McGinnis, Jr.
IBM Corporation, Dept. 917
3605 Highway 52 North
Rochester MN 55901-7829

In re Application of Richard D. Dettinger et al. Application No. 10/388,075 Filed: March 13, 2003 Attorney Docket No.: ROC920020196US1 Title: USAGE-BASED OPTIMIZATION OF NETWORK TRAFFIC AND DATA WAREHOUSE SIZE	DECISION ON PETITION UNDER 37 C.F.R. § 1.137(B)

This is a decision on the petition filed March 26, 2009, pursuant to 37 C.F.R. § 1.137(b), to revive the above-identified application.

This petition pursuant to 37 C.F.R. § 1.137(b) is **GRANTED**.

A notice of appeal was filed on January 23, 2007, along with a two-month extension of time. An amendment was filed on March 6, 2007, with a supplemental amendment provided on March 13, 2007. On May 25, 2007, the Office mailed an Interview Summary, and on June 25, 2007, Applicants submitted an Interview Summary. No appeal brief was received, and no extensions of time under the provisions of 37 C.F.R. § 1.136(a) were requested. Consequently, the above-identified application became abandoned on March 24, 2007. A notice of abandonment was mailed on April 18, 2008.

A petition pursuant to 37 C.F.R. § 1.181 was filed on February 18, 2009, and was dismissed via the mailing of a decision on March 16, 2009.

A grantable petition pursuant to 37 C.F.R. § 1.137(b) must be accompanied by:

(1) The reply required to the outstanding Office action or notice, unless previously filed;
(2) The petition fee as set forth in 37 C.F.R. § 1.17(m);
(3) A statement that the entire delay in filing the required reply from the due date for the reply until the filing of a grantable petition pursuant to this paragraph was unintentional. The Commissioner may require additional information where there is a question whether the delay was unintentional, and;
(4) Any terminal disclaimer (and fee as set forth in 37 C.F.R. § 1.20(d)) required pursuant to paragraph (d) of this section.

With this petition, Petitioner has submitted a Request for Continued Examination (RCE) under 37 C.F.R. § 1.114, including a request for consideration of a previously submitted amendment and payment of the RCE fee. The RCE has been accepted as the required reply under 37 C.F.R. §1.137(b)(1). Having made the proper statement of unintentional delay and having submitted the petition fee, the first three requirements of Rule 1.137(b) have been met. The fourth requirement of Rule 1.137(b) is not applicable, as a terminal disclaimer is not required.[1]

The Technology Center will be notified of this decision. The Technology Center's support staff will notify the Examiner of this decision, so that the submission under 37 C.F.R. § 1.114 - the amendment filed on March 6, 2007 - can be processed.

Petitioner may find it beneficial to view Private PAIR within a fortnight of the present decision to ensure that the revival has been acknowledged by the Technology Center in response to this decision. It is noted that all inquiries with regard to any failure of that change in status should be directed to the Technology Center where that change of status must be effected - **the Office of Petitions cannot effectuate a change of status.**

It is noted that the address listed on the petition differs from the address of record. The application file does not indicate a change of correspondence address has been filed in this case, although the address given on the petition differs from the

1 See Rule 1.137(d).

address of record. If Applicants desire to receive future correspondence regarding this application, the change of correspondence address must be submitted. A courtesy copy of this decision will be mailed to Applicants. However, all future correspondence will be directed to the address of record until such time as appropriate instructions are received to the contrary. Applicants will not receive future correspondence related to this application unless Change of Correspondence Address, Patent Form (PTO/SB/122) is submitted for the above-identified application. For Applicants' convenience, a blank Change of Correspondence Address, Patent Form (PTO/SB/122), may be found at http://www.uspto.gov/web/forms/sb0122.pdf.

Telephone inquiries regarding *this decision* should be directed to the undersigned at (571) 272-3225[2]. All other inquiries concerning examination procedures or status of the application should be directed to the Technology Center.

/Paul Shanoski/
Paul Shanoski
Senior Attorney
Office of Petitions

cc: Gero G. McClellan
Patterson & Sheridan, L.L.P.
3040 Post Oak Blvd, Suite 1500
Houston, TX 77056

---

2 Petitioner will note that all practice before the Office should be in writing, and the action of the Office will be based exclusively on the written record in the Office. See 37 C.F.R. § 1.2. As such, Petitioner is reminded that no telephone discussion may be controlling or considered authority for Petitioner's further action(s).

UNITED STATES PATENT AND TRADEMARK OFFICE

UNITED STATES DEPARTMENT OF COMMERCE
United States Patent and Trademark Office
Address: COMMISSIONER FOR PATENTS
P.O. Box 1450
Alexandria, Virginia 22313-1450
www.uspto.gov

William J. McGinnis, Jr.
IBM Corporation, Dept. 917
3605 Highway 52 North
Rochester, MN 55901-7829

Mail Date: 04/21/2010

Applicant	: Richard D. Dettinger	: DECISION ON REQUEST FOR
Patent Number	: 7627597	: RECALCULATION of PATENT
Issue Date	: 12/01/2009	: TERM ADJUSTMENT IN VIEW
Appliction No	: 10/388,075	: OF WYETH AND NOTICE OF INTENT TO
Filed	: 03/13/2003	: ISSUE CERTIFICATE OF CORRECTION
		:

The Request for Recalculation is **GRANTED** to the extent indicated.

The patent term adjustment has been determined to be **752** days. The USPTO will *sua sponte* issue a certificate of correction reflecting the amount of PTA days determined by the recalculation.

Prior to the issuance of the certificate of correction, the USPTO will afford patentee an opportunity to be heard and request reconsideration. Accordingly, patentee has **one month or thirty (30) days**, whichever is longer, to file a request for reconsideration of this patent term adjustment calculation. See 35 U.S.C. 154(b)(3)(B)(ii) and 37 CFR 1.322(a)(4). No extensions of time will be granted under 37 CFR 1.136.

Patentee should use document code PET.OP if electronically filing a request for reconsideration of this patent term adjustment calculation. The patentee must also include the information required by 37 CFR 1.705(b)(2) and the fee required by 37 CFR 1.18(e). If patentee does not file a timely request for reconsideration of this patent term adjustment calculation including the information required by 37 CFR 1.705(b)(2) and the fee required by 37 CFR 1.18(e), the USPTO will issue a certificate of correction reflecting the PTA determination noted above.

Patentee should be aware that in order to preserve the right to review in the United States District Court for the District of Columbia of the USPTO patent term adjustment determination, patentee must ensure that he or she also take the steps required under 35 U.S.C. 154(b)(4)(A) in a timely manner. Nothing in the request for recalculation should be construed as providing an alternative time frame for commencing a civil action under 35 U.S.C. 154(b)(4)(A).

Any questions concerning this decision should be directed to the Office of Patent Legal Administration at 571-272-7702.

UNITED STATES PATENT AND TRADEMARK OFFICE

COMMISSIONER FOR PATENTS
UNITED STATES PATENT AND TRADEMARK OFFICE
P.O. BOX 1450
ALEXANDRIA, VA 22313-1450
www.uspto.gov

MICHAEL BEST & FRIEDRICH
100 E WISCONSIN AVENUE
MILWAUKEE, WI 53202

COPY MAILED

APR 0 8 2004

OFFICE OF PETITIONS

In re Application of
Daniel J. Collins et al
Application No. 10/388,085
Filed: March 13, 2003
Attorney Docket No. 031382-9004-01

:DECISION ON PETITION

This is a decision on the petition under 37 CFR 1.47, filed February 19, 2004, which is being treated as a petition under 37 CFR 1.183 to waive 37 CFR 1.131 to the extent that it requires that all of the named inventors execute the declaration filed thereunder.

The petition is granted to the extent *infra*.

Petitioner asserts that joint inventors Scott E. Coursin, Thomas P. Gasper, and Ilya Basin are "either unable or unwilling to sign the declaration" under 37 CFR 1.131. A declaration under 37 CFR 1.131 in support of establishing conception of the claimed invention prior to the critical date of the Kelly et al reference has been submitted.

As noted in MPEP 715.04, an adequate showing may lead to acceptance of a declaration under 37 CFR 1.131 executed by less than all the named inventors of the claimed subject matter in question. Under the facts presented, it is agreed that justice requires waiver of the rules to the extent that they require joint inventors Coursin, Gasper, and Basin to declare. However, the favorable decision herein does not relieve applicants from their burden to establish that the invention was completed before the date of the reference and that the claimed invention was the product of the joint inventors. See In re Carlson, 79 F.2d. 900, 27 USPQ 400 (CCPA 1935).

This matter is being referred to Technology Center AU 2857.

Telephone inquiries regarding this decision should be directed to Petitions Examiner Wan Laymon at (703) 306-5685.

Brian Hearn
Senior Petitions Examiner
Office of Petitions
Office of the Deputy Commissioner
for Patent Examination Policy

UNITED STATES PATENT AND TRADEMARK OFFICE

COMMISSIONER FOR PATENTS
UNITED STATES PATENT AND TRADEMARK OFFICE
P.O. BOX 1450
ALEXANDRIA, VA 22313-1450
www.uspto.gov

Paper No. 4

HINKLE & O'BRADOVICH, LLC
395 SCENIC HIGHWAY
LAWRENCEVILLE, GA 30045

COPY MAILED

JUL 1 6 2003

OFFICE OF PETITIONS

In re Application of :
Hedrick :
Application No. 10/388,119 : DECISION ON PETITION
Filed: March 13, 2003 :
Attorney Docket No. Hedrick.pt :

This is a decision on the petition filed May 27, 2003, requesting, in effect, that Figure 15 filed on May 27, 2003, be entered as part of the original disclosure.

The petition is **dismissed**.

Any request for reconsideration must be submitted within TWO (2) MONTHS from the mail date of this decision. No further petition fee is required for the request. Extensions of time under 37 CFR 1.136(a) are NOT permitted. This is **not** final agency action within the meaning of 5 U.S.C. § 704.

The application was filed on March 13, 2003. On May 5, 2003, the Office of Initial Patent Examination mailed a Notice stating in part that the application had been accorded a filing date of March 13, 2003, and advising applicant that Figure 15 appeared to have been omitted.

In response, the present petition was filed. Petitioner alleges Figure 15 was filed with the original application.

All the evidence present in the file has been carefully considered, but is not persuasive that Figure 15 was submitted with the original application.

While petitioner apparently believes that Figure 15 was filed on March 13, 2003, the file of application No. 10/388,119[1] shows that Figure 15 was not received, since no such paper is present in the file. An applicant alleging that a paper was filed in the USPTO and later misplaced has the burden of proving the allegation by a preponderance of the evidence. In this regard, declarations by individuals involved in the preparation and filing of the original application reciting their personal recollection or belief of what was contained in the application that they reviewed are generally not more persuasive of what was actually filed in the USPTO than the contents of the application file. Such declarations are usually made weeks or months after the actual events recited. In this case, the declaration filed was made several weeks after the application was filed. Thus, the declaration does not have more probative value than the official government record of what was actual received in the USPTO on March 13, 2003.

[1] The file contains the actual papers received and the file is an official government record prepared and maintained by disinterested USPTO employees as a part of their customary and usual duties.

Petitioner has only demonstrated an intent to file Figure 15 and has not established that Figure 15 was actually filed. Unfortunately, patent applicants and their representatives, who intend to file complete applications, occasionally file applications which are missing one or more pages, due to clerical error, a copying machine error (such as papers sticking together), papers falling out of a file, or another reason. A demonstration of an intent to included a page or pages does not establish the actual receipt of such pages by the Office.

Further correspondence with respect to this matter should be addressed as follows:

By mail: Mail Stop Petition
Commissioner for Patents
P.O. Box 1450
Alexandria, VA 22313-1450

By facsimile: (703) 308-6916
Attn: Office of Petitions

By hand: Office of Petitions
2201 South Clark Place
Crystal Plaza 4, Suite 3C23
Arlington, VA 22202

Since applicant has not filed a petition under 37 CFR 1.182 requesting May 27, 2003, the date the missing page was filed, as the filing date, the page filed on May 27, 2003, will not be entered.

An amendment to the specification deleting references to the missing page should be filed prior to the first USPTO action in order to avoid further delays in the examination of the application. In the alternative, if petitioner desires for the examiner to consider a page which was not submitted as part of the original disclosure, then petitioner may seek to submit some or all of that page as an amendment. Any such amendment will, of course, be reviewed by the examiner for new matter. See MPEP 608.02(a).

Petitioner should note that the record fails to indicate the receipt of corrected drawings which were required by the Notice mailed on May 5, 2003. The corrected drawings and the appropriate request for an extension of time should be submitted.

If a request of reconsideration, or petition under 37 CFR 1.182, is not filed within two months, the file will be returned to the Office of Initial Patent Examination for further processing with a filing date of March 13, 2003, using only the papers filed on that date.

Telephone inquiries should be directed to Petitions Attorney Steven Brantley at (703) 306-5683.

Charles Steven Brantley
Senior Petitions Attorney
Office of Petitions

UNITED STATES PATENT AND TRADEMARK OFFICE

COMMISSIONER FOR PATENTS
UNITED STATES PATENT AND TRADEMARK OFFICE
P.O. BOX 1450
ALEXANDRIA, VA 22313-1450
www.uspto.gov

MAIL

OCT 0 4 2004

DIRECTOR OFFICE
TECHNOLOGY CENTER 2100

Paper No. 11

Striker, Striker, & Stenby
103 East Neck Road
Huntington, NY 11743

In re Application of: Fiebig, et al.	)	
Application No. 10/388,142	)	**DECISION ON PETITION TO**
Attorney Docket No. 25267	)	**WITHDRAW HOLDING OF**
Filed: March 13, 2003	)	**ABANDONMENT UNDER 37 CFR**
For: OPERATING MECHANISM,	)	**§1.181**
ELECTRICAL APPARATUS, AND	)	
ASSOCIATED METHOD OF OPERATION	)	

This is a decision on the petition, filed July 22, 2004, requesting the Withdrawal of the Holding of Abandonment of the above-identified application, which has been treated as a petition under 37 CFR §1.181. This application was held abandoned for failure to timely pay the issue fee due within the statutory period of three months from the mailing date of the Notice of Allowance and Fee(s) Due (PTOL-85), mailed February 6, 2004 (Paper No. 8). A Notice of Abandonment was mailed on July 8, 2004 (Paper No. 9).

In support of the petition, applicants' representative provides a statement that the Notice of Allowance was not received as well as copies from both a computer docketing system and hand entry system for responses to USPTO communications.

According to the MPEP §711.03(c), the showing required to establish nonreceipt of an Office action includes the following:

> *1) a statement from practitioner that the Office action was not received;*
> ***2) a statement from practitioner that the file jacket and docket records were searched;***
> ***3) a copy of the docket record <u>at the address of record</u>; and***
> ***4) a reference to the docket record in the practitioner's statement.***
> [Emphasis added.]

The petition fails to fully comply with requirements 2-4 set forth above. The evidence submitted has not overcome the presumption of receipt.

The statement referenced in item 2) above is missing. In addition, the copy of the docket record where the non-received Office communication would have been entered had it been received and docketed (i.e. reference to *the address of record*), must be attached to ***and*** properly referenced in

practitioner's statement. The attorney must also have been at the address of record at the time the action was mailed or have filed a timely Change of Correspondence address.

The petition is **DISMISSED**.

If petitioner desires further review of this decision, petitioner should file a Request for Reconsideration within two (2) months of the mailing date of this decision. Telephone inquiries should be directed to the undersigned at (703) 308-0885.

Brian L. Johnson
Special Programs Examiner
Technology Center 2100
Computer Architecture, Software, and Information Security

9/30/04

UNITED STATES PATENT AND TRADEMARK OFFICE

COMMISSIONER FOR PATENTS
UNITED STATES PATENT AND TRADEMARK OFFICE
P.O. BOX 1450
ALEXANDRIA, VA 22313-1450
www.uspto.gov

MAILED

MAY 17 2006

TECHNOLOGY CENTER 2100

Michael Striker
Striker, Striker & Stenby
103 East Neck Road
Huntington, NY 11743

In re Application of: Fiebig, et al. Application No. 10/388,142 Attorney Docket No. 25267 Filed: March 13, 2003 For: OPERATING MECHANISM, ELECTRICAL APPARATUS, AND ASSOCIATED METHOD OF OPERATION	DECISION ON PETITION TO WITHDRAW HOLDING OF ABANDONMENT UNDER 37 CFR §1.181

This is a decision on the request for reconsideration filed on October 18, 2004. The instant application was held abandoned for failure to timely pay the issue fee due in response to the Notice of Allowance and Fee(s) Due (PTOL-85) mailed February 6, 2004. A petition to withdraw the holding of abandonment based on failure to receive the office action (M.P.E.P. §711.03(c)) was timely filed on July 22, 2004 and subsequently dismissed in the decision mailed on October 4, 2004 for the reasons set forth therein.

Petitioner has provided supplemental evidence in the latest filing which includes practitioner's statement asserting to the fact that a search of the file jacket and docket records confirm that the Office communication was not received. Petitioner has also provided a copy of the docket report, at the address of record, referred to therein.

The guidelines outlined in MPEP § 711.03(c) I(A) Petition to Withdraw Holding of Abandonment Based on Failure to Receive Office Action requires:

1) *a statement from the practitioner that the Office communication was not received by the practitioner;*
2) *a statement from the practitioner that a search of the file jacket and docket records was made and the Office communication was not received;*
3) *a copy of the docket record where the nonreceived Office communication would have been received and docketed; and*
4) *a reference to the docket record in the practitioner's statement.*

Since all of the criteria set forth above have now been met, the petition is **GRANTED**.

The application is being forwarded to the Supervisory Legal Instruments Examiner with instructions to **WITHDRAW** the holding of abandonment and restore the instant application to pending status, before **REDATING** and **REMAILING** the Notice of Allowance and Issue fees due to the applicant.

Brian L. Johnson
Special Programs Examiner
Technology Center 2100
Computer Architecture, Software, and Information Security
571-272-3595

UNITED STATES PATENT AND TRADEMARK OFFICE

COMMISSIONER FOR PATENTS
UNITED STATES PATENT AND TRADEMARK OFFICE
P.O. BOX 1450
ALEXANDRIA, VA 22313-1450
www.uspto.gov

COPY MAILED

OCT 01 2009

OFFICE OF PETITIONS

CLARK & ELBING LLP
101 FEDERAL STREET
BOSTON MA 02110

In re Patent No. 7,514,405
Lucas et al.
Issue Date: April 7, 2009
Application No. 10/388,149
Filed: March 13, 2003
Title: Methods For Treating Transplant Rejection

: DECISION ON REQUEST FOR
: REQUEST FOR RECONSIDERATION
: PATENT TERM ADJUSTMENT and
: NOTICE OF INTENT TO ISSUE
: CERTIFICATE OF CORRECTION

This is in response to the "APPLICATION FOR PATENT TERM ADJUSTMENT UNDER 37 C.F.R. § 1.705", filed June 8, 2009. This petition is properly treated under 37 CFR 1.705(d). Patentees request that the patent term be adjusted from 317 days to 281 days.

The request for reconsideration of the patent term adjustment indicated in the patent is **GRANTED-IN-PART and Dismissed-IN-PART**.

Patentees are given THIRTY (30) DAYS or ONE (1) MONTH, whichever is longer, from the mail date of this decision to respond to this decision. No extensions of time will be granted under 37 CFR 1.136.

The patent term adjustment indicated in the patent is to be corrected by issuance of a certificate of correction showing a revised Patent Term Adjustment of two hundred thirty-six **(236)** days.

On April 7, 2009, the above-identified application matured into U.S. Patent No. 7,514,405 with a revised patent term adjustment of three hundred seventeen (317) days. This request for reconsideration of patent term adjustment (including the required fee) was timely filed within two months of the issue date of the patent. See 37 CFR 1.705(d).

Patentees request recalculation of the patent term adjustment based on the decision in Wyeth v. Dudas, 580 F. Supp. 2d 138, 88 U.S.P.Q. 2d 1538 (D.D.C. 2008). Patentees assert entitlement to a patent term adjustment of 281 days (464 + 45 reduced by 228 (applicant delay)). Patentees also state that an additional reduction of 81 days for the period between the reply and Request for Continued Examination (RCE) received by the Office on November 2, 2007 and the supplemental reply received in the Office on January 22, 2008 is required.

Consideration first turns to patentees' contention that a period of reduction for applicant delay is in error. Pursuant to their duty of candor and good faith, patentees disclose that entry of an 81-day reduction is required for the submission of the supplemental replies in the form of an Information Disclosure Statements (IDS) filed on December 5, 2007 and December 17, 2007, and an "Interview Summary and Supplemental Reply" filed on January 22, 2008, subsequent to the amendment and RCE filed on November 2, 2007.

Patentees are correct that a reduction of 81 days should have been entered based on 37 CFR 1.704(c)(8). 37 CFR 1.704(c) provides that:

> Circumstances that constitute a failure of the applicant to engage in reasonable efforts to conclude processing or examination of an application also include the following circumstances, which will result in the following reduction of the period of adjustment set forth in § 1.703 to the extent that the periods are not overlapping:
>
> (8) Submission of a supplemental reply or other paper, other than a supplemental reply or other paper expressly requested by the examiner, after a reply has been filed, in which case the period of adjustment set forth in § 1.703 shall be reduced by the number of days, if any, beginning on the day after the date the initial reply was filed and ending on the date that the supplemental reply or other such paper was filed;

It is undisputed that patentees submitted an IDS on December 5, 2007 and December 17, 2007 and the "Interview Summary and Supplemental Reply", after filing an initial response on November 2, 2007, to the final Office action. The record does not support a conclusion that the examiner expressly requested the IDS or the supplemental reply. Further, a review of the IDS, filed December 5, 2007 and December 17, 2007, reveals that patentees did not include a statement under 37 CFR 1.704(d). Thus, patentees failed to engage in reasonable efforts to conclude prosecution of the application.

In accordance with 37 CFR 1.704(c)(8), the period of adjustment should have been reduced by 81 days, the number of days beginning on the day after the date the initial reply was filed, November 3, 2007, and ending on the date that the "Interview Summary and Supplemental Reply" was filed, January 22, 2008.

As such, the total reduction for applicants' delay is 228 (147 + 81) days.

The petition is **Granted** to the extent that an additional 81 days of applicant delay was required pursuant to 37 CFR 1.704 (c)(8).

Consideration now turns to patentees' assertion that the Office's calculation has not included "B delay" for issuance beyond three years from filing. Considering the overlap provision, the Office entered 0 days for this period. Patentees maintain that considering the overlap provision, 45 days should have been entered. The Office finds that as of the filing of the Request for Continued Examination (RCE) on April 27, 2006, the application was pending three years and 45 days after

its filing date. An entry of a period of adjustment of 464 days was entered for Office delay. At issue is whether patentees should accrue 45 days of patent term adjustment for the Office taking in excess of three years to issue the patent as well as 464 days for Office failure to take a certain action within a specified time frame (or examination delay).

35 U.S.C. 154(b)(2)(A) limits the adjustment of patent term, as follows:

> To the extent that the periods of delay attributable to grounds specified in paragraph (1) overlap, the period of any adjustment granted under this subsection shall not exceed the actual number of days the issuance of the patent was delayed.

Likewise, 37 CFR 1.703(f) provides that:

> To the extent that periods of delay attributable to the grounds specified in §1.702 overlap, the period of adjustment granted under this section shall not exceed the actual number of days the issuance of the patent was delayed.

As explained in *Explanation of 37 CFR 1.703(f) and of the United States Patent and Trademark Office Interpretation of 35 U.S.C. 154(b)(2)(A)*, 69 Fed. Reg. 34283 (June 21, 2004), the Office interprets 35 U.S.C. 154(b)(2)(A) as permitting either patent term adjustment under 35 U.S.C. 154(b)(1)(A)(i)-(iv), or patent term adjustment under 35 U.S.C. 154(b)(1)(B), but not as permitting patent term adjustment under both 35 U.S.C. 154(b)(1)(A)(i)-(iv) and 154(b)(1)(B). Accordingly, the Office implements the overlap provision as follows:

> If an application is entitled to an adjustment under 35 U.S.C. 154(b)(1)(B), the entire period during which the application was pending (except for periods excluded under 35 U.S.C. 154(b)(1)(B)(i)-(iii)), and not just the period beginning three years after the actual filing date of the application, is the period of delay under 35 U.S.C. 154(b)(1)(B) in determining whether periods of delay overlap under 35 U.S.C. 154(b)(2)(A). Thus, any days of delay for Office issuance of the patent more than 3 years after the filing date of the application, which overlap with the days of patent term adjustment accorded prior to the issuance of the patent will not result in any additional patent term adjustment. See 35 U.S.C. 154(b)(1)(B), 35 U.S.C. 154(b)(2)(A), and 37 CFR § 1.703(f). See *Changes to Implement Patent Term Adjustment Under Twenty Year Term; Final Rule*, 65 Fed. Reg. 56366 (Sept. 18, 2000). See also *Revision of Patent Term Extension and Patent Term Adjustment Provisions; Final Rule*, 69 Fed. Reg. 21704 (April 22, 2004), 1282 Off. Gaz. Pat. Office 100 (May 18, 2004). See also *Explanation of 37 CFR 1.703(f) and of the United States Patent and Trademark Office Interpretation of 35 U.S.C. 154(b)(2)(A),* 69 Fed. Reg. 34283 (June 21, 2004).

with the actual dates in the periods for failure of the Office to take action within specified time frames.

In this instance, the relevant period under 35 U.S.C. 154(b)(1)(B) in determining whether periods of delay "overlap" under 35 U.S.C. 154(b)(2)(A) is the filing date March 13, 2003 until the filing of the RCE on April 27, 2006. Prior to the filing of the RCE, 323 days of patent term adjustment were accorded for the Office failing to respond within a specified time frame during the pendency of the application.

The Office did not delay 323 days and then delay an additional 45 days. Accordingly, 323 days of patent term adjustment for Office delay (not 323 days and 45 days) was properly entered because the entire period of delay of 45 days attributable to the delay under 37 CFR 1.702(b) overlaps with the 323 days attributable to grounds specified in §§ 1.702(a)(1). An additional 141 days for Office delay were accrued subsequent to the filing of the RCE.

In view thereof, patentees' request for an additional 317 days of patent term adjustment is **DISMISSED**.

Accordingly, at issuance, the Office properly entered no additional days of patent term adjustment pursuant to 37 CFR 1.702(b).

In view thereof, the patent term adjustment indicated on the patent should be two hundred thirty-six **(236)** days (464 days of Office delay *less* 228 days of applicant delay).

The Office acknowledges submission of the $200.00 fee set forth in 37 CFR 1.18(e). No additional fees are required.

The application file is being forwarded to the Certificates of Correction Branch for issuance of a certificate of correction in order to rectify this error. The Office will issue a certificate of correction indicating that the term of the above-identified patent is extended or adjusted by two hundred thirty-six **(236)** days.

Telephone inquiries specific to this matter should be directed to the Petitions Attorney Charlema Grant at (571) 272-3215.

Alesia M. Brown
Petitions Attorney
Office of Petitions

Enclosure: Copy of DRAFT Certificate of Correction

UNITED STATES PATENT AND TRADEMARK OFFICE

CERTIFICATE OF CORRECTION

PATENT : 7,514,405 B2

DATED : April 7, 2009

INVENTOR(S) : Lucas et al.

It is certified that error appears in the above-identified patent and that said Letters Patent is hereby corrected as shown below:

On the cover page,

[*] Notice: Subject to any disclaimer, the term of this patent is extended or adjusted under 35 USC 154(b) by (317) days

Delete the phrase "by 317 days" and insert – by 236 days--

UNITED STATES PATENT AND TRADEMARK OFFICE

Commissioner for Patents
United States Patent and Trademark Office
P.O. Box 1450
Alexandria, VA 22313-1450
www.uspto.gov

COPY MAILED
MAR 16 2010

CLARK & ELBING LLP
101 FEDERAL STREET
BOSTON MA 02110

In re Patent No. 7,514,405	:
Lucas et al.	: DECISION ON REQUEST FOR
Issue Date: April 7, 2009	: RECONSIDERATION OF
Application No. 10/388,149	: PATENT TERM ADJUSTMENT
Filed: March 13, 2003	: AND NOTICE OF INTENT
Attorney Docket No.	: TO ISSUE CERTIFICATE OF
50082/030003	: CORRECTION
Title: METHODS FOR TREATING	:
TRANSPLANT REJECTION	:

This is a decision on the petition filed on November 2, 2009, which is being treated as a petition under 37 CFR 1.181 requesting that the patent term adjustment indicated on the above-identified patent be corrected to indicate that the term of the above-identified patent is extended or adjusted by two hundred eighty-one (281) days. The petition was filed within two months of a decision by the Office mailed on September 30, 2009 dismissing applicant request for reconsideration of PTA under 37 CFR 1.705(d).

The petition to correct the patent term adjustment indicated on the above-identified patent is **GRANTED to the extent indicated herein.**

As the period from the filing date of the request for continued examination (RCE) to the issue date of the patent is not included in the "B" delay period, the over three year period begins on March 14, 2006 and ends on April 26, 2006, the day before the RCE was filed, and is 44 days. **See** 35 U.S.C. 154(b)(1)(B)(i).

As such, the patent term adjustment is 280, not 281 days.

The Office will *sua sponte* issue a certificate of correction. Pursuant to 37 CFR 1.322, the Office will not issue a certificate of correction without first providing assignee or patentee an opportunity to be heard. Accordingly, patentees are given **one (1) month or thirty (30) days**, whichever is longer, from the mail date of this decision to respond. No extensions of time will be granted under § 1.136.

The Office acknowledges submission of the $200.00 fee set forth in 37 CFR 1.18(e). No additional fees are required.

The application is being forwarded to the Certificates of Branch for issuance of a certificate of correction. The Office will issue a certificate of correction indicating that the term of the above-identified patent is extended or adjusted by **two hundred eighty (280)** days.

Telephone inquiries specific to this matter should be directed to Petitions Attorney, Charlema Grant at (571) 272-3215.

/ALESIA M. BROWN/

Alesia M. Brown
Petitions Attorney
Office of Petitions

Enclosure: Copy of DRAFT Certificate of Correction

UNITED STATES PATENT AND TRADEMARK OFFICE

CERTIFICATE OF CORRECTION

PATENT : 7,514,405 B2

DATED : **April 7, 2009** **DRAFT**

INVENTOR(S) : Lucas et al.

It is certified that error appears in the above-identified patent and that said Letters Patent is hereby corrected as shown below:

On the cover page,

[*] Notice: Subject to any disclaimer, the term of this patent is extended or adjusted under 35 USC 154(b) by 236 days

Delete the phrase "by 236 days" and insert – by 280 days--

UNITED STATES PATENT AND TRADEMARK OFFICE

Commissioner for Patents
United States Patent and Trademark Office
P.O. Box 1450
Alexandria, VA 22313-1450
www.uspto.gov

MAR - 9 2007

COHEN & GRIGSBY, P.C.
11 STANWIX STREET
15TH FLOOR
PITTSBURGH, PA 15222

In re Patent No. DENMEADE, TIMOTHY J. Appl. No.: 10/388,157 Filed: March 13, 2003 For: DIGITAL MEDIA SOURCE INTEGRAL WITH MICROPROCESSOR, IMAGE PROJECTION DEVICE AND AUDIO COMPONENTS AS A SELF-CONTAINED SYSTEM	**DECISION DISMISSING PETITION UNDER MPEP § 1002.02(c)(d)**

This is a decision on the petition filed 06/22/06 to consider the formal sufficiency and propriety of the Declaration Under 37 C.F.R. § 1.131 and supporting Affidavits and Exhibit previously filed 12/29/05.

The petition is **dismissed**.

Applicant's arguments alleged that the examiner failed to recognize the Derryberry patent as not having support for the claimed limitation as of the filing date of the non-provisional patent and the Declaration under 37 C.F.R. § 1.131 and supporting Affidavits and Exhibit previously filed 12/29/05 to swear behind the non-provisional filing date of the Derryberry patent address the merits of the Office Action. Accordingly, the issues raised are appealable and not petitionable. The relief requested cannot be granted by petition. Accordingly, this petition is dismissed and an Examiner's Answer will be issue promptly. Any inquiry concerning this decision should be directed to undersigned at 571-272-2399.

Diane I. Lee
Supervisory Patent Examiner
Art Unit 2851

UNITED STATES PATENT AND TRADEMARK OFFICE

COMMISSIONER FOR PATENTS
UNITED STATES PATENT AND TRADEMARK OFFICE
P.O. BOX 1450
ALEXANDRIA, VA 22313-1450
www.uspto.gov

Paper No. 8

KNOBBE MARTENS OLSON & BEAR, LLP
2040 MAIN STREET
FOURTEENTH FLOOR
IRVINE, CA 92614

COPY MAILED

JAN 15 2004

OFFICE OF PETITIONS

In re Application of	:	
Ozaki, et al.	:	
Application No. 10/388,185	:	ON PETITION
Filed: March 12, 2003	:	
Attorney Docket No. 2003946-0039	:	

This is a decision on the petition under 37 CFR 1.53 filed on December 8, 2003, requesting that the above-identified application be accorded a filing date of March 12, 2003, including pages 85, 185, 204, 243, 257, 319, 332, 369, 393, 442 and 465 of the specification.

The application was filed on March 12, 2003. However, on November 3, 2003, the Office of Initial Patent Examination (OIPE) mailed a "Notice Of Omitted Item(s)" that stated the application had been accorded a filing date, but pages 85, 185, 204, 243, 257, 319, 332, 369, 393, 442 and 465 of the specification appear to have been omitted.

In response, on December 8, 2003, the instant petition and a copy of pages 85, 185, 204, 243, 257, 319, 332, 369, 393, 442 and 465 of the specification were submitted. The papers were accompanied by a copy of applicant's postcard receipt that acknowledges receipt of five hundred seventy (570) pages of specification on March 12, 2003. A review of the application file indicates the presence of five hundred fifty-nine (559) pages of specification. It is assumed that pages 85, 185, 204, 243, 257, 319, 332, 369, 393, 442 and 465 of the specification were misplaced by the Office.

In view of the above, the petition is granted.

The $130.00 petition fee, submitted December 8, 2003, will be refunded to deposit account no. 03-1721.

This application will be returned to OIPE for further processing with a filing date of March 12, 2003, using the copy of pages 85, 185, 204, 243, 257, 319, 332, 369, 393, 442 and 465 of the specification, supplied on December 8, 2003.

Telephone inquiries concerning this matter may be directed to the undersigned at (703) 306-9200.

Edward J. Tannouse
Senior Petitions Attorney
Office of Petitions
United States Patent and Trademark Office

UNITED STATES PATENT AND TRADEMARK OFFICE

Commissioner for Patents
United States Patent and Trademark Office
P.O. Box 1450
Alexandria, VA 22313-1450
www.uspto.gov

COPY MAILED

NOV 13 2007

OFFICE OF PETITIONS

KOPPEL, PATRICK & HEYBL
555 ST. CHARLES DRIVE
SUITE 107
THOUSAND OAKS CA 91360

In re Application of	:	
Sanford Sherman et al.	:	
Application No. 10/388,203	:	DECISION ON PETITION
Filed: March 12, 2003	:	TO WITHDRAW
Attorney Docket No. 30055.800USC1	:	FROM RECORD
	:	

This is a decision on the Request to Withdraw as attorney or agent of record under 37 C.F.R. § 1.36(b), filed June 22, 2007.

The request is **NOT APPROVED**.

A grantable request to withdraw as attorney/agent of record must be signed by every attorney/agent seeking to withdraw or contain a clear indication that one attorney is signing on behalf of another/others. A request to withdraw will not be approved unless at least 30 (thirty) days would remain between the date of approval and the later of the expiration date of a time to file a response or the expiration date of the maximum time period which can be extended under 37 C.F.R. § 1.136(a).

The Office cannot approve the request at this time since the reasons provided do not meet any of the conditions under the mandatory or permissive categories enumerated in 37 CFR 10.40. Section 10.40 of Title 37 of the Code of Federal Regulation states, "[a] practitioner shall not withdraw from employment in a proceeding before the Office without permission from the Office[.]" More specifically, 37 CFR 10.40 states, "[i]f paragraph (b) of this section is not applicable, a practitioner may not request permission to withdraw in matter pending before the Office unless such request or such withdrawal is" for one the permissive reasons listed in 37 CFR 10.40(c). The reasons set forth in the request, ***our firm was relieved of all responsibility of representing applicant and all files were returned to applicant***, do not meet any the conditions set forth in 37 CFR 10.40.

All future communications from the Office will continue to be directed to the above-listed address until otherwise notified by applicant.

Telephone inquiries concerning this decision should be directed to Terri Williams at 571-272- 2991.

T. Williams

Terri Williams
Petitions Examiner
Office of Petitions

cc: **Michael Dunn**
3813 Via Del Campo
San Clemente, CA 92673

UNITED STATES PATENT AND TRADEMARK OFFICE

Commissioner for Patents
United States Patent and Trademark Office
P.O. Box 1450
Alexandria, VA 22313-1450
www.uspto.gov

Koppel, Patrick & Heybl
555 St. Charles Drive
Suite 107
Thousand Oaks, CA 91360

COPY MAILED

FEB 27 2008

OFFICE OF PETITIONS

In re Application of	:	
Sanford Sherman et al.	:	
Application No. 10/388,203	:	DECISION ON PETITION
Filed: March 12, 2003	:	TO WITHDRAW
Attorney Docket No. 30055.800USC1	:	FROM RECORD
	:	

This is a decision on the Request to Withdraw as attorney or agent of record under 37 C.F.R. § 1.36(b), filed November 19, 2007.

The request is **APPROVED**.

A grantable request to withdraw as attorney/agent of record must be signed by every attorney/agent seeking to withdraw or contain a clear indication that one attorney is signing on behalf of another/others. A request to withdraw will not be approved unless at least 30 (thirty) days would remain between the date of approval and the later of the expiration date of a time to file a response or the expiration date of the maximum time period which can be extended under 37 C.F.R. § 1.136(a).

The request was signed by Richard S. Koppel on behalf of all attorneys of record. All attorneys/agents have been withdrawn. Applicant is reminded that there is no attorney of record at this time.

The request to change the correspondence of record is not acceptable as the requested correspondence address is not that of: (1) the first named signing inventor; or (2) an intervening assignee of the entire interest under 37 C.F.R 3.71. All future communications from the Office will be directed to the first named signing inventor at the first copied address below until otherwise properly notified by the applicant.

There is no outstanding Office action at this time.

Telephone inquiries concerning this decision should be directed to Terri Williams at 571-272-2991.

T. Williams

Terri Williams
Petitions Examiner
Office of Petitions

cc: **Sherman Sanford**
27631 La Paz Road
Laguna Niguel, CA 92667

cc: **Michael Dunn**
3813 Van Del Campo
San Clemente, CA 92673

UNITED STATES PATENT AND TRADEMARK OFFICE

UNITED STATES DEPARTMENT OF COMMERCE
United States Patent and Trademark Office
Address: COMMISSIONER FOR PATENTS
P.O. Box 1450
Alexandria, Virginia 22313-1450
www.uspto.gov

APPLICATION NUMBER	FILING OR 371(C) DATE	FIRST NAMED APPLICANT	ATTY. DOCKET NO./TITLE
10/388,203	03/12/2003	Sanford Sherman	30055.800USC1

CONFIRMATION NO. 1843

POWER OF ATTORNEY NOTICE

23935
KOPPEL, PATRICK & HEYBL
555 ST. CHARLES DRIVE
SUITE 107
THOUSAND OAKS, CA 91360

OC000000028497815

Date Mailed: 02/26/2008

NOTICE REGARDING CHANGE OF POWER OF ATTORNEY

This is in response to the Power of Attorney filed 11/19/2007.

- The withdrawal as attorney in this application has been accepted. Future correspondence will be mailed to the new address of record. 37 CFR 1.33.

/smwilliams/

Office of Initial Patent Examination (571) 272-4000 or 1-800-PTO-9199

UNITED STATES PATENT AND TRADEMARK OFFICE

COMMISSIONER FOR PATENTS
UNITED STATES PATENT AND TRADEMARK OFFICE
P.O. BOX 1450
ALEXANDRIA, VA 22313-1450
WWW.USPTO.GOV

Paper No. 4

MYERS BIGEL SIBLEY &
SAJOVEC
PO BOX 37428
RALEIGH, NC 27627

COPY MAILED

JUN 2 6 2003

OFFICE OF PETITIONS

In re Application of
Ideker et al.
Application No. 10/388,211
Filed: March 13, 2003
Attorney Docket No. 5656-26

ON PETITION

This decision concerns the June 16, 2003 "Petition to Accord the Proper Filing Date" which is being properly treated as a petition under 37 CFR 1.10(c).

The petition is **GRANTED**.

The petition requests a filing date of March 13, 2003 rather than the presently accorded filing date of March 14, 2003, on the basis that the application was deposited on March 13, 2003 in the U.S. Postal Service (USPS) "Express Mail Post Office to Addressee" service pursuant to the requirements of 37 CFR 1.10. The petition is accompanied by a copy of the "Express Mail" mailing label bearing the number "EV193586274US" and containing a USPS date-stamp of March 13, 2003. The same mailing label number also appears on the application transmittal which itemizes the application papers being mailed on that date. In addition, the Office has verified through the official USPS website, www.usps.gov (Track & Confirm) that the package mailed under this label had been accepted by the USPS on March 13, 2003 at 5:42 pm. The petition is thus granted.

No petition fee is owed.

The application file is being forwarded to the Office of Initial Patent Examination for correcting the filing date to March 13, 2003, for mailing a corrected filing receipt reflecting that filing date, and to await a reply to the May 13, 2003 Notice to File Missing Parts of Nonprovisional Application. Upon completion of pre-examination, the application file will be forwarded to the appropriate Technology Center for examination in due course.

Telephone inquiries should be directed to the undersigned at (703) 308-0763.

RC Tang
Petitions Attorney
Office of Petitions

UNITED STATES PATENT AND TRADEMARK OFFICE

Commissioner for Patents
United States Patent and Trademark Office
P.O. Box 1450
Alexandria, VA 22313-1450
www.uspto.gov

BUCHANAN INGERSOLL P.C.
ONE OXFORD CENTRE
301 GRANT STREET
PITTSBURGH PA 15219

COPY MAILED

APR 0 8 2005

OFFICE OF PETITIONS

In re Application of	:
Cooper et al.	: DECISION ON PETITIONS
Application No. 10/388,213	: UNDER 37 CFR 1.78(a)(3) AND
Filed: 12 March, 2003	: UNDER 37 CFR 1.55(c)
Attorney Docket No. 49123.000004.UTL1	:

This is a decision on the petition styled under 37 CFR § 1.78(a)(3), which is treated as a petition under 37 CFR §§ 1.55(c) and 1.78(a)(3) and , filed 1 February, 2005, to accept an unintentionally delayed claim under 35 U.S.C. §§ 120 and 119(a)-(d) for the benefit of the prior-filed international and foreign applications set forth in the concurrently filed amendment.

The petition is **DISMISSED**.

A petition for acceptance of a claim for late priority under 37 CFR § 1.78(a)(3) is only applicable to those applications filed on or after November 29, 2000. Further, the petition is appropriate only after the expiration of the period specified in 37 CFR §§ 1.78(a)(2)(ii). In addition, the petition under 37 CFR § 1.78(a)(3) must be accompanied by:

(1) the reference required by 35 U.S.C. §§ 120 and 37 CFR § 1.78(a)(2)(i) of the prior-filed application, unless previously submitted;
(2) the surcharge set forth in § 1.17(t); and
(3) a statement that the entire delay between the date the claim was due under 37 CFR §§ 1.78(a)(2)(ii) and the date the claim was filed was

> unintentional. The Commissioner may require additional where there is a question whether the delay was unintentional.

The petition fails to comply with item (1) above.

The concurrently filed amendment to add the prior-filed applications on page one following the first sentence of the specification is not acceptable as drafted since it improperly incorporates by reference the prior-filed applications. Petitioner's attention is directed to Dart Industries v. Banner, 636 F.2d 684, 207 USPQ 273 (C.A.D.C. 1980), where the court drew a distinction between a permissible 35 U.S.C. § 120 statement and the impermissible introduction of new matter by way of incorporation by reference in a 35 U.S.C. § 120 statement. The court specifically stated:

> Section 120 merely provides a mechanism whereby an application becomes entitled to benefit of the filing date of an earlier application disclosing the same subject matter. Common subject matter must be disclosed, in both applications, either specifically or by an express incorporation-by-reference of prior disclosed subject matter. Nothing in section 120 itself operates to carry forward any disclosure from an earlier application. In re deSeversky, supra at 674, 177 USPQ at 146-147. Section 120 contains no magical disclosure-augmenting powers able to pierce new matter barriers. It cannot, therefore, "limit" the absolute and express prohibition against new matter contained in section 251.

In order for the incorporation by reference statement to be effective as a proper safeguard against the omission of a portion of a prior application, the incorporation by reference statement must be included in the specification-as-filed, or in an amendment specifically referred to in an oath or declaration executing the application. *See* In re deSeversky, *supra*. *Note also* MPEP 201.06(c).

Accordingly, before the petition under 37 CFR §§ 1.78(a)(3) can be granted, a renewed petition under 37 CFR §§ 1.78(a)(3) and a substitute amendment[1] deleting the improper incorporation by reference statement is required.

The instant pending nonprovisional application was filed after November 29, 2000, and did not include a reference to the foreign application, for which benefit is now sought, within the later of four months from the actual filing date of the application or sixteen months from the filing date of the prior foreign application. Therefore, since the claim for priority is submitted after the period specified in 37 CFR 1.55(a)(1)(i), this is an appropriate petition under the provisions of 37 CFR 1.55(c).

---

[1] *Note* 37 CFR 1.121

A petition under 37 CFR 1.55(c) to accept an unintentionally delayed claim for priority requires:

(1) The nonprovisional application claiming the benefit of an earlier filing date must be filed on or after November 29, 2000;

(2) the claim submitted with the petition must identify the prior foreign application for which priority is claimed, as well as any foreign application for the same subject matter and having a filing date before that of the application for which priority is claimed, by the application number, country, and the filing date and be included either in an oath or declaration (37 CFR 1.63(c)(2)) or in an Application Data Sheet (37 CFR 1.76(b)(6);

(3) the surcharge as set forth in 37 CFR 1.17(t);

(4) a statement that the entire delay between the date the claim was due under 37 CFR 1.55(a)(1) and the date the claim was filed was unintentional. (The Commissioner may require additional information where there is a question whether the delay was unintentional.); and

(5) the above-identified nonprovisional application must be filed within 12 months of the filing date of the foreign application.

While the claim of foreign priority under 37 CFR § 1.55(c) has been presented as required in a supplemental declaration filed with the present petition, the amendment is improper as the foreign application is incorporated by reference. As such, the petition cannot be granted until a proper amendment deleting the incorporation by reference is filed.

Further correspondence with respect to this matter should be addressed as follows:

By mail: Mail Stop PETITIONS
Commissioner for Patents
Post Office Box 1450
Alexandria, VA 22313-1450

By hand: Customer Service Window
Mail Stop Petitions
Randolph Building
40l Dulany Street
Alexandria, VA 22314

By fax: (703) 872-9306
ATTN: Office of Petitions

Any questions concerning this matter may be directed to Senior Petitions Attorney Douglas I. Wood at (571) 272-3231 .

Frances Hicks

Frances Hicks
Petitions Examiner
Office of Petitions
Office of the Deputy Commissioner
for Patent Examination Policy

UNITED STATES PATENT AND TRADEMARK OFFICE

Commissioner for Patents
United States Patent and Trademark Office
P.O. Box 1450
Alexandria, VA 22313-1450
www.uspto.gov

BUCHANAN INGERSOLL P.C.
ONE OXFORD CENTRE
301 GRANT STREET
PITTSBURGH PA 15219

COPY MAILED

JUL 1 8 2005

OFFICE OF PETITIONS

In re Application of	:
Cooper et al.	: DECISION ON PETITIONS
Application No. 10/388,213	: UNDER 37 CFR 1.78(a)(3) AND
Filed: 12 March, 2003	: UNDER 37 CFR 1.55(c)
Attorney Docket No. 49123.000004.UTL1	:

This is a decision on the renewed petition styled under 37 CFR § 1.78(a)(3), which is treated as a petition under 37 CFR §§ 1.55(c) and 1.78(a)(3) and , filed 4 May, 2005, to accept an unintentionally delayed claim under 35 U.S.C. §§ 120 and 119(a)-(d) for the benefit of the prior-filed international and foreign applications set forth in the concurrently filed amendment.

The petition is again **DISMISSED**.

A petition for acceptance of a claim for late priority under 37 CFR § 1.78(a)(3) is only applicable to those applications filed on or after November 29, 2000. Further, the petition is appropriate only after the expiration of the period specified in 37 CFR §§ 1.78(a)(2)(ii). In addition, the petition under 37 CFR § 1.78(a)(3) must be accompanied by:

(1) the reference required by 35 U.S.C. §§ 120 and 37 CFR § 1.78(a)(2)(i) of the prior-filed application, unless previously submitted;
(2) the surcharge set forth in § 1.17(t); and
(3) a statement that the entire delay between the date the claim was due under 37 CFR §§ 1.78(a)(2)(ii) and the date the claim was filed was unintentional. The Commissioner may require additional where there is a question whether the delay was unintentional.

The petition fails to comply with item (1) above.

The concurrently filed amendment to add the prior-filed international application is not acceptable as drafted because it indicates that the instant application is a National Stage filing under 35 U.S.C. § 371 of the international application identified in the petition. A review of Office records reveals that the instant application was not filed as a National Stage application under 35 U.S.C. § 371.

Petitioners should submit a new amendment with a correctly stated benefit claim, and which correctly states the relationship between the prior-filed international application and the instant application (*i.e.*, continuation, divisional, or continuation-in-part).

The instant pending nonprovisional application was filed after November 29, 2000, and did not include a reference to the foreign application, for which benefit is now sought, within the later of four months from the actual filing date of the application or sixteen months from the filing date of the prior foreign application. Therefore, since the claim for priority is submitted after the period specified in 37 CFR 1.55(a)(1)(i), this is an appropriate petition under the provisions of 37 CFR 1.55(c).

A petition under 37 CFR 1.55(c) to accept an unintentionally delayed claim for priority requires:

(1) The nonprovisional application claiming the benefit of an earlier filing date must be filed on or after November 29, 2000;

(2) the claim submitted with the petition must identify the prior foreign application for which priority is claimed, as well as any foreign application for the same subject matter and having a filing date before that of the application for which priority is claimed, by the application number, country, and the filing date and be included either in an oath or declaration (37 CFR 1.63(c)(2)) or in an Application Data Sheet (37 CFR 1.76(b)(6);

(3) the surcharge as set forth in 37 CFR 1.17(t);

(4) a statement that the entire delay between the date the claim was due under 37 CFR 1.55(a)(1) and the date the claim was filed was unintentional. (The Commissioner may require additional information where there is a question whether the delay was unintentional.); and

(5) the above-identified nonprovisional application must be filed within 12 months of the filing date of the foreign application.

The amendment is objected to on the grounds of (5) above. Until an amendment properly

reciting the claim to benefit of the prior-filed international application is received, the claim of foreign priority cannot be entered. As the claim to foreign priority is based on the claim of benefit of the international application, the petition under 37 CFR 1.55(c) is therefore dismissed without prejudice to reconsideration pending submission of an amendment properly stating the relationship of the instant application and the prior-filed international application, No. PCT/NZ03/00042, filed on 10 March, 2003.

Further correspondence with respect to this matter should be addressed as follows:

By mail: Mail Stop PETITIONS
Commissioner for Patents
Post Office Box 1450
Alexandria, VA 22313-1450

By hand: Customer Service Window
Mail Stop Petitions
Randolph Building
401 Dulany Street
Alexandria, VA 22314

By fax: (571) 273-8300
ATTN: Office of Petitions

Any questions concerning this matter may be directed to Senior Petitions Attorney Douglas I. Wood at (571) 272-3231 .

Frances Hicks

Frances Hicks
Petitions Examiner
Office of Petitions
Office of the Deputy Commissioner
for Patent Examination Policy

UNITED STATES PATENT AND TRADEMARK OFFICE

Commissioner for Patents
United States Patent and Trademark Office
P.O. Box 1450
Alexandria, VA 22313-1450
www.uspto.gov
DIW Aug-05

BUCHANAN INGERSOLL, P.C.
ONE OXFORD CENTRE, 301 GRANT STREET
20TH FLOOR
PITTSBURGH PA 15219

COPY MAILED

AUG 2 3 2005

OFFICE OF PETITIONS

In re Application of	:	
Cooper et al.	:	DECISION GRANTING PETITION
Application No. 10/388,213	:	UNDER 37 CFR 1.78(a)(3)
Filed: 12 March, 2003	:	AND 37 CFR 1.55(c)
Atty Dkt No. 49123.000004.UTL1	:	

This is a decision on the request for reconsideration filed on 22 July, 2005, which is treated as a petition under 37 CFR §§ 1.55(c) and 1.78(a)(3), to accept an unintentionally delayed claim under 35 U.S.C. §§ 120, 365(c), and 119(a)-(d) for the benefit of the prior-filed international and foreign applications set forth in the concurrently filed amendment.

The petition is **GRANTED**.

A petition for acceptance of a claim for late priority under 37 CFR §§ 1.78(a)(3) is only applicable to those applications filed on or after November 29, 2000. Further, the petition is appropriate only after the expiration of the period specified in 37 CFR §§ 1.78(a)(2)(ii). In addition, the petition under 37 CFR §§ 1.78(a)(3) must be accompanied by:

(1) the reference required by 35 U.S.C. § 120 and 37 CFR § 1.78(a)(2)(i) of the prior-filed application, unless previously submitted;
(2) the surcharge set forth in § 1.17(t); and
(3) a statement that the entire delay between the date the claim was due under 37 CFR § 1.78(a)(2)(ii) and the date the claim was filed was unintentional.

The Commissioner may require additional where there is a question whether the delay was unintentional.

The instant nonprovisional application was filed after November 29, 2000, and the claim herein for the benefit of priority to the prior-filed applications is submitted after expiration of the period specified in 37 CFR § 1.78(a)(2)(ii). Therefore, this is a proper petition under 37 CFR § 1.78(a)(3).

The petition complies with the requirements for a grantable petition under 37 CFR § 1.78(a)(3) in that (1) a reference to the prior-filed international application has been included in an amendment to the first sentence of the specification following the title as provided by 37 CFR § 1.78(a)(2)(iii); (2) the surcharge fee required by 37 CFR 1.17(t) has been submitted; and (3) the petition contains a proper statement of unintentional delay. Accordingly, having found that the instant petition for acceptance of an unintentionally delayed claim for the benefit of priority under 35 U.S.C. §§ 120 and 365(c) to the prior-filed international application satisfies the conditions of 37 CFR § 1.78(a)(3), the petition is granted.

A petition under 37 CFR 1.55(c) to accept an unintentionally delayed claim for priority requires:

(1) The nonprovisional application claiming the benefit of an earlier filing date must be filed on or after November 29, 2000;

(2) the claim submitted with the petition must identify the prior foreign application for which priority is claimed, as well as any foreign application for the same subject matter and having a filing date before that of the application for which priority is claimed, by the application number, country, and the filing date **and be included either in an oath or declaration (37 CFR 1.63(c)(2)) or in an Application Data Sheet (37 CFR 1.76(b)(6)**;

(3) the surcharge as set forth in 37 CFR 1.17(t);

(4) a statement that the entire delay between the date the claim was due under 37 CFR 1.55(a)(1) and the date the claim was filed was unintentional. (The Commissioner may require additional information where there is a question whether the delay was unintentional); and

(5) the above-identified nonprovisional application must be filed within 12 months of the filing date of the foreign application.

The instant pending nonprovisional application was filed after November 29, 2000, and did not include a reference to the foreign application, for which benefit is now sought, within the later of four months from the actual filing date of the application or sixteen months from the filing date of the prior foreign application. Therefore, since the claim for priority is submitted after the period specified in 37 CFR 1.55(a)(1)(i), this is an appropriate petition under the provisions of 37 CFR 1.55(c).

The above-identified pending nonprovisional application was filed on 12 March, 2003, and is copending with prior-filed international Application No. PCT/NZ03/00042, which was filed on 10 March, 2003, which is within 12 months of 8 March, 2002 (the filing date of the foreign application to which benefit is now being claimed). An oath or declaration was filed on 1 February, 2005, which identifies the foreign application for which priority is claimed by application number, country and filing date. Lastly, petitioner has provided an adequate statement of unintentional delay.

All requirements being met, the petition under 37 CFR 1.55(c) to accept an unintentionally delayed claim for priority under 35 U.S.C. § 119(a)-(d) is **granted**.

Petitioners should note that, in future filings, a claim for foreign priority should be included in either an oath or declaration in compliance with 37 CFR 1.63(c)(2) or in an Application Data Sheet in compliance with 37 CFR 1.76(b)(6) rather than in the first paragraph of the specification.

The granting of the petition to accept the delayed benefit claim to the prior-filed applications under 37 CFR §§ 1.78(a)(3) and 1.78(a)(6) should <u>not</u> be construed as meaning that the instant application is entitled to the benefit of the filing date of the prior-filed applications. In order for the instant application to be entitled to the benefit of the prior-filed applications, all other requirements under 35 U.S.C. §§120 and 365(c) and 1.78(a)(1) and (a)(2) and under 35 U.S.C. §119(e) and 37 CFR 1.78(a)(4) and (a)(5) must be met. Similarly, the fact that the corrected Filing Receipt accompanying this decision on petition

includes the prior-filed applications should not be construed as meaning that applicant is entitled to the claim for benefit of priority to the prior-filed applications noted thereon. Accordingly, the examiner will, in due course, consider this benefit claim and determine whether the instant application is entitled to the benefit of the earlier filing date.

A corrected Filing Receipt, which includes the priority claim to the prior-filed applications, accompanies this decision on petition.

Any questions concerning this matter may be directed to Senior Petitions Attorney Douglas I. Wood at (571) 272-3231. All other inquiries concerning either the examination procedures or status of the application should be directed to the Technology Center.

This application is being forwarded to Technology Center Art Unit 1614 for appropriate action on the amendment submitted 22 July, 2005, including consideration by the examiner of the claim under 35 U.S.C. § §120 and 365(c) and 37 CFR 1.78(a)(2) for the benefit of the prior-filed international application, and for consideration of the claim under 35 U.S.C. §119(e) and 37 CFR 1.78(a)(5) for the benefit of the prior-filed provisional application, and for consideration of the foreign priority claim under 35 U.S.C. § 111(a)-(d).

Frances Hicks

Frances M. Hicks
Petitions Examiner
Office of Petitions
Office of the Deputy Commissioner
for Patent Examination Policy

ATTACHMENT: Corrected Filing Receipt

UNITED STATES PATENT AND TRADEMARK OFFICE

Commissioner for Patents
United States Patent and Trademark Office
P.O. Box 1450
Alexandria, VA 22313-1450
www.uspto.gov

MAILED 12/14/07

DEC 22 2007

Technology Center 2100

Eduardo Garcia-Otero
MCDERMOTT WILL & EMERY LLP
600 13TH STREET, N.W.
WASHINGTON DC 20005-3096

In re Application of:
Kenta SHIGA, ET AL.
Application No. 10/388,225
Filed: March 14, 2003
For: **MULTIMEDIA COMMUNICATION SYSTEM**

DECISION ON PETITION UNDER 37 C.F.R. § 1.181

This is a decision on the Petition for Exercise of Supervisory Authority and Withdrawal of Finality of Office action filed on 05 September 2007. The Petition filed 05 September 2007 has been treated as a petition under 37 C.F.R. § 1.181 to review the prematurness of the Final rejection mailed on 5 June 2007.

The petition is **GRANTED**.

RELEVANT PROSECUTION HISTORY

On 26 April 2007, applicant filed a RCE and an amendment to claims 1-19. Independent claims 1 and 15 were amended with new limitations as follows:

Claim 1, the limitation "including the contents of the operation of changing said occupied/unoccupied status in accordance with said presence information, and the policy enables the control server to set the occupied/unoccupied status of all media of the at least one terminal of a user based on the presence information of the user at said at least one terminal" was replaced with the new limitation:

> "and wherein the at least one policy enables the server to perform any of the following operations: i) set the occupied/unoccupied status of all communication media at all terminals used by the user, ii) set the occupied/unoccupied status of the communication medium at all terminals used by the user, and iii) set the occupied/unoccupied status of all communication media at one terminal used by the user, and

> further characterized in that said control server enables a system manager or the user to register which operation will be performed dependent upon the user presence information."

Claim 15, the limitation "(D) apply at least one policy condition to set the status of at least one medium of at least one of the terminals associated with the user in accordance with the selectively associated user presence information" was replaced with

> "(D) perform an operation dependent upon the user presence information, wherein the operation is select from a group of operations comprising: i) get the occupied/unoccupied status of all communication media at all terminals used by the user, ii) the occupied/unoccupied status of one communication medium at all terminals used by the user, and iii) set the occupied/unoccupied status of all communication media at one terminal used by the user, and
>
> (E) enable a system manager for the user to register which operation will be performed, dependent upon the user presence information."

On 29 May 2007, the examiner finally rejected all claims 1-19 in the first Office action.

On 05 September 2007, petitioner contended that the new limitations added claim 15 is to distinguish the amended claims from the cited prior art. Thus, the action immediately subsequent to the filing of RCE may not be made final.

REGULATIONS AND PRACTICE

MPEP § 706.07(b) states in part that:

> The claims of a new application may be finally rejected in the first Office action in those situations where (A) the new application is a continuing application of, or a substitute for, an earlier application, and (B) all claims of the new application (1) are drawn to the same invention claimed in the earlier application...

MPEP § 706.07(h)(VIII) states that:

> The action immediately subsequent to the filing of an RCE with a submission and fee under 37 CFR 1.114 may be made final only if the conditions set forth in MPEP § 706.07(b) for making a first action final in a continuing application are met.

DECISION

A review of the file indicates that the new limitations added to claims 1 and 15 are not drawn to the same invention as claimed in the earlier amendment filed 27 October 2006. Further, the

amendment with the new limitations added to claims 1 and 15 would be required further search and/or consideration if it were presented as an amendment after final Office action.

For the above stated reasons, the petition is **GRANTED.** The final Office action mailed on 06 May 2007 is hereby withdrawn and changed to non-final Office, and applicant's response filed on 05 September 2007 has been treated as a response to the non-final Office action. The RCE filing fee paid on 06 December 2007 is hereby credited to Deposit Account No. 500417.

Any inquiry concerning this decision should be directed to Kim Huynh, whose telephone number is (571) 272-4147.

Jack Harvey

Jack Harvey, Director
Technology Center 2100
Computer Architecture, Software,
and Information Security

UNITED STATES PATENT AND TRADEMARK OFFICE

COMMISSIONER FOR PATENTS
UNITED STATES PATENT AND TRADEMARK OFFICE
P.O. BOX 1450
ALEXANDRIA, VA 22313-1450
www.uspto.gov

Paper No. 6

MILLEN, WHITE, ZELANO & BRANIGAN, P.C.
2200 CLARENDON BLVD.
SUITE 1400
ARLINGTON, VA 22201

COPY MAILED

JAN 29 2004

OFFICE OF PETITIONS

In re Application of	:	
Nakanishi	:	DECISION ON PETITION
Application No. 10/388,229	:	
Filed: March 14, 2003	:	
Atty. Dkt. No.: TAKIT-164P1	:	

This is a decision on the petition under 37 CFR 1.137(b) filed December 29, 2003.

The application became abandoned July 23, 2003 for failure to timely reply to the Notice to Missing Parts of Nonprovisional Application ("Notice") mailed May 22, 2003. The Notice set a two (2) month shortened statutory period for reply. No petition for extension of time in accordance with 37 CFR 1.136 was timely filed. This decision precedes Notice of Abandonment.

The instant petition has been reviewed and found in compliance with the provisions of 37 CFR 1.137(b). Accordingly, the failure to timely reply to the Notice mailed May 22, 2003 is accepted as having been unintentionally delayed.

This application is being forwarded to the Office of Initial Patent Examination for further processing.

Telephone inquiries regarding the content of this decision should be directed to the undersigned at (703) 305-0310.

Alesia M. Brown
Senior Petitions Attorney
Office of Petitions

UNITED STATES PATENT AND TRADEMARK OFFICE

Commissioner for Patents
United States Patent and Trademark Office
P.O. Box 1450
Alexandria, VA 22313-1450
www.uspto.gov

NIXON & VANDERHYE, PC
901 NORTH GLEBE ROAD, 11TH FLOOR
ARLINGTON VA 22203

COPY MAILED

JAN 2 1 2009

In re Application of	:	
ARNOULD, Sylvain et al.	:	
Application No. 10/388,230	:	DECISION ON PETITION
Filed: March 14, 2003	:	TO WITHDRAW
Attorney Docket No. **BJS-4413-5**	:	FROM RECORD
	:	

This is a decision on the Request to Withdraw as attorney or agent of record under 37 C.F.R. § 1.36(b), filed December 05, 2008.

A grantable request to withdraw as attorney/agent of record must be signed by every attorney/agent seeking to withdraw or contain a clear indication that one attorney is signing on behalf of another/others. The Office requires the practitioner(s) requesting withdrawal to certify that he, she, or they have: (1) given reasonable notice to the client, prior to the expiration of the response period, that the practitioner(s) intends to withdraw from employment; (2) delivered to the client or a duly authorized representative of the client all papers and property (including funds) to which the client is entitled; and (3) notified the client of any responses that may be due and the time frame within which the client must respond, pursuant 37 CFR 10.40(c).

The request was signed by B. J. Sadoff on behalf of all attorneys of record. All attorneys/agents associated have been withdrawn. Applicant is reminded that there is no attorney of record at this time.

All future correspondence will be directed to the first named inventor Sylvian Arnould at the address indicated below.

There is an outstanding Office action mailed November 25, 2008 that requires a reply from the applicant.

Telephone inquiries concerning this decision should be directed to Michelle R. Eason at 571-272-4231.

Michelle R. Eason
Paralegal Specialist
Office of Petitions

cc: **SYLVAIN ARNOULD**
116 RUE LAMARCK,
PARIS, FRANCE 75018

UNITED STATES PATENT AND TRADEMARK OFFICE

Commissioner for Patents
United States Patent and Trademark Office
P.O. Box 1450
Alexandria, VA 22313-1450
www.uspto.gov

Paper No.

Susan T. Hubl, Ph.D.
FENWICK & WEST LLP
801 California Street
Mountain View, CA 94014

MAILED

JUL 12 2005

Technology Center 2100

In re Application of:
Lex M. Cowsert
Application No. 10/388,263
Filed: March 12, 2003
For: IDENTIFICATION OF GENETIC TARGETS FOR MODULATION BY OLIGONUCLEOTIDES AND GENERATION OF OLIGONUCLEOTIDES FOR GENE MODULATION

DECISION ON REQUEST TO WITHDRAW AS ATTORNEY OR AGENT

This is a decision on the Request To Withdraw from Representation filed June 23, 2005.

A grantable request to withdraw as attorney of record should indicate thereon the present mailing addresses of the attorney(s) who is/are withdrawing from the record and of the applicant. The request for withdrawal must be signed by every attorney seeking to withdraw or contain a clear indication that one attorney is signing on behalf of another/others. A request to withdraw will not be approved unless at least 30 (thirty) days would remain between the date of approval and the later of the expiration date of a time to file a response or the expiration date of the maximum time period which can be extended under 37 C.F.R. ∋ 1. 136(a). The effective date of withdrawal being the date of decision and not the date of request. See M.P.E.P. ∋ 402.06. 37 C.F.R. ∋ 1.36 further requires that the applicant or patent owner be notified of the withdrawal of the attorney or agent.

The request filed June 23, 2005 meets all the requirements. Accordingly the request is **GRANTED**.

All future communications from the Office will be directed to the below-listed address until otherwise notified by applicant. This correspondence address is provided by the withdrawn attorney(s). Applicant is reminded of the obligation to promptly notify the Patent and Trademark Office (Office) of any change in correspondence address to ensure receipt of all communications from the Office.

James R. Matthews

for Vincent N. Trans
Special Program Examiner
Technology Center 2100
Computer Architecture, Software, and
Information Security
(571) 272-3613

cc: Paul K. Legaard, Ph.D.
COZEN O'CONNOR
1900 Market Street
Philadelphi, PA 19103

UNITED STATES PATENT AND TRADEMARK OFFICE

Commissioner for Patents
United States Patent and Trademark Office
P.O. Box 1450
Alexandria, VA 22313-1450
www.uspto.gov

COPY MAILED
OCT 24 2006
OFFICE OF PETITIONS

ROBERT D. GUNDERMAN, JR.
PATENT TECHNOLOGIES, LLC
150 LUCIUS GORDON DRIVE, SUITE 205
WEST HENRIETTA, NY 14586

In re Application of	:	
Patricia A. Rapp	:	
Application No. 11/388,315	:	DECISION ON PETITION
Filed: March 24, 2006	:	TO MAKE SPECIAL
Attorney Docket No. PAR 012	:	37 CFR 1.102(c)(2)
	:	

This is a decision on the petition under 37 CFR 1.102(c)(2)(i), filed April 21, 2006, to make the above-identified application special based on the invention materially enhancing the quality of the environment as set forth in M.P.E.P. § 708.02, Section V. This is also a decision on the petition under 37 CFR 1.102(c)(2)(ii), filed April 21, 2006, to make the above-identified application special based on the invention materially contributing to the development or conservation of energy resources as set forth in M.P.E.P. § 708.02, Section VI.

The petition under 37 CFR 1.102(c)(2)(i) is **DISMISSED**.

A grantable petition to make an application special under 37 CFR 1.102(c)(2)(i) and MPEP § 708.02, Section V: Environmental Quality, must state that special status is sought because the invention materially enhances the quality of the environment by contributing to the restoration or maintenance of basic life-sustaining natural elements. If the disclosure is not clear on its face that the claimed invention materially enhances the quality of the environment by contributing to the restoration or maintenance of one of the basic life-sustaining natural elements, the petition must be accompanied by a statement by the applicant, assignee, or an attorney/agent registered to practice before the Office explaining how the materiality standard is met. No fee is required

The present invention relates generally to a system and method for monitoring wear of an object, and more particularly to a system and method that uses radio frequency identification to monitor wear of an object. However, there is no factual evidence that the invention "materially enhances the quality of the environment of mankind by contributing to the restoration or maintenance of the basis-life sustaining natural elements." The contribution of petitioner's invention, while beneficial to the environment, does not rise to the level intended by the Rule.

The petition under 37 CFR 1.102(c)(2)(ii), is **DISMISSED**.

A grantable petition to make an application special under 37 CFR 1.102(c)(2)(ii) and MPEP § 708.02, Section VI: Energy, must state how the invention materially contributes to (A) the discovery or development of energy resources, or (B) the more efficient utilization and conservation of energy resources. If the disclosure is not clear on its face that the claimed invention materially contributes category (A) or (B), the petition must be accompanied by a statement by the applicant, assignee, or an attorney/agent registered to practice before the Office explaining how the materiality standard is met. Examples of inventions in category (A) would be developments in fossil fuels (natural gas, coal, and petroleum), hydrogen fuel technologies, nuclear energy, solar energy, etc. Category (B) would include inventions relating to the reduction of energy consumption in combustion systems, industrial equipment, household appliances, etc. No fee is required.

The instant petition fails to meet the materiality standard of 37 CFR 102(c)(2)(ii). Although the invention may be directed to inventions relating to the reduction of energy consumption, the materiality standard of the rule has not been met, i.e., petitioner has failed to state how the claimed invention contributes in a significant, substantial, or noticeable manner to inventions relating to the reduction of energy consumption. That the invention may be used to detect tire wear does not in itself meet the materiality standard. Further steps would be required to actually reduce energy consumption; furthermore, as the invention is directed to wear detection, only some minor aspect of the invention would be related to the reduction of energy consumption. Accordingly, it is unclear as to how the claimed invention would contribute in a significant manner to the reduction of energy consumption.

Telephone inquires concerning this decision should be directed to Irvin Dingle at 571-272-3210.

All other inquires concerning either the examination or status of the application should be directed to the Technology Center.

The application is being forwarded to the Technology Center Art Unit 2612 for action on the merits commensurate with this decision.

David Bucci
Petitions Examiner
Office of Petitions

UNITED STATES PATENT AND TRADEMARK OFFICE

Commissioner for Patents
United States Patent and Trademark Office
P.O. Box 1450
Alexandria, VA 22313-1450
www.uspto.gov

BROWDY AND NEIMARK, P.L.L.C.
624 NINTH STREET, NW
SUITE 300
WASHINGTON DC 20001-5303

MAILED

JUN 19 2009

OFFICE OF PETITIONS

In re Patent No. 7,462,596
Larsen et al.
Issue Date: December 9, 2008
Application No. 10/388,322
Filed: March 14, 2003
Attorney Docket No. LARSEN=2
Title: Pharmaceutical Compositions Comprising Mannose Binding Lectin

DECISION ON REQUEST FOR RECONSIDERATION OF PATENT TERM ADJUSTMENT

This is in response to the "Request for Reconsideration of Patent Term Adjustment" filed February 5, 2009. This petition will be treated under 37 CFR 1.705(d).

The request for reconsideration of patent term adjustment is **DISMISSED**.

On December 9, 2008, the above-identified application matured into US Patent No. 7,462,596 with a patent term adjustment of 54 days. This request for reconsideration of patent term adjustment (including the required fee) was timely filed within two months of the issue date of the patent. See 37 CFR 1.705(d).

Patentees request recalculation of the patent term adjustment based on the decision in Wyeth v. Dudas, 580 F. Supp. 2d 138, 88 U.S.P.Q. 2d 1538 (D.D.C. 2008). Patentees assert that pursuant to Wyeth, a PTO delay under 35 U.S.C. §154(b)(1)(A) overlaps with a delay under 35 U.S.C. §154(b)(1)(B) only if the delays "occur on the same day." Patentees maintain that a portion of the period of adjustment due to the Three.Year Delay by the Office, pursuant to 37 CFR § 1.703(b), 288 days, do not overlap with the 192 day period of adjustment due to examination delay, pursuant to 37 CFR §1.702(a), as these periods do not occur on the same day.

Thus, patentees request that the determination of patent term adjustment be increased by 288 days to a total of three hundred forty-two (342) days.

Patentees assert the 288 day period is calculated based on the application having been filed under 35 U.S.C. §111(a) on March 14, 2003, and a request for continued examination (RCE) having being filed on December 27, 2006. The filing of a RCE cuts-off the applicants' ability to accumulate any additional patent term adjustment against the three-year pendency provision, but does not otherwise affect patent term adjustment. 37 CFR § 1.703(b)(1).

Accordingly, patentees maintain the period of adjustment under § 1.702(b) is 288 days, counting the number of days beginning on March 14, 2003 and ending on December 27, 2006. The period of reduction of 138 days for applicant delay is not in dispute.

The Office finds the following: under 37 CFR § 1.703(f), patentees are entitled to a period of patent term adjustment equal to the period of delays based on the grounds set forth in 37 CFR §1.702 reduced by the period of time equal to the period of time during which applicants failed to engage in reasonable efforts to conclude prosecution pursuant to 37 CFR §1.704. In other words, the period of Office delay reduced by the period of applicant delay.

Contrary to patentees' calculations, the first RCE was filed on November 28, 2005, not December 27, 2006. As such petitioner's calculations improperly include the filing date of the second RCE. The instant patent is not eligible for adjustment pursuant to 37 CFR 1.702(b). Adjustment pursuant to 37 CFR 1.702(b) ceased accruing upon submission of the RCE filed on November 28, 2005, which was less than three years after the application was filed.

In view thereof, the Office affirms that the correct revised determination of patent term adjustment at the time of the issuance of the patent is 54 days (192 - 138).

The Office acknowledges submission of the $200.00 fee set forth in 37 CFR 1.18(e). No additional fees are required.

Telephone inquiries specific to this matter should be directed to Charlema Grant, Petitions Attorney, at (571) 272-3215.

Kery A Fries

Kery Fries
Senior Legal Advisor Attorney
Office of Patent Legal Administration

UNITED STATES PATENT AND TRADEMARK OFFICE

Commissioner for Patents
United States Patent and Trademark Office
P.O. Box 1450
Alexandria, VA 22313-1450
www.uspto.gov

JJGJR.: 03-06

Paper No: __

COPY MAILED

MAR 16 2006

OFFICE OF PETITIONS

THE WEBB LAW FIRM, P.C.
700 KOPPERS BUILDING
436 SEVENTH AVENUE
PITTSBURGH PA 15219

In re Application of	:	
Cohen	:	
Application No. 10/388,330	:	DECISION
Filing Date: 13 March, 2003	:	
Attorney Docket No. 4095-030061	:	

This is a decision on the petition filed on 7 November, 2005, to revive the instant application 37 C.F.R. §1.137(b) as having been abandoned due to unintentional delay.

For the reasons set forth below, the petition under 37 C.F.R. §1.137(b) is **GRANTED**.

BACKGROUND

The record reflects that:

- Petitioner failed to reply timely and properly to the non-final Office action mailed on4 August, 2004, with reply due absent extension of time on or before 4 November, 2004;
- the instant application went abandoned after midnight 4 November, 2004;
- the Office mailed the Notice of Abandonment on 17 March, 2005;
- with the instant petition and fee, Petitioner filed an amendment as the required reply and made the statement of unintentional delay.

STATUTES, REGULATIONS AND ANALYSIS

Congress has authorized the Commissioner to "revive an application if the delay is shown to the satisfaction of the Commissioner to have been "unavoidable." 35 U.S.C. §133 (1994).[1]

The regulations at 37 C.F.R. §1.137(a) and (b) set forth the requirements for a petitioner to revive a previously unavoidably or unintentionally, respectively, abandoned application under this congressional grant of authority. The language of 35 U.S.C. §133 and 37 C.F.R. §1.137(a) is clear, unambiguous, and without qualification: the delay in tendering the reply to the outstanding Office action, as well as filing the first petition seeking revival, must have been unavoidable for the reply now to be accepted on petition.[2]

Delays in responding properly raise the question whether delays are unavoidable.[3] Where there is a question whether the delay was unavoidable, Petitioners must meet the burden of establishing that the delay was unavoidable within the meaning of 35 U.S.C. §133 and 37 C.F.R. §1.137(a).[4] And the Petitioner must be diligent in attending to the matter.[5] Failure to do so does not constitute the care required under Pratt, and so cannot satisfy the test for diligence and due care.

(By contrast, unintentional delays are those that do not satisfy the very strict statutory and regulatory requirements of unavoidable delay, and also, by definition, are not intentional.[6]))

Allegations as to Unintentional Delay

A grantable petition under 37 C.F.R. §1.137(b) requires a petition, fee, statement of unintentional delay, reply, and a terminal disclaimer and fee if appropriate.

---

[1] 35 U.S.C. §133 provides:
35 U.S.C. §133 Time for prosecuting application.
Upon failure of the applicant to prosecute the application within six months after any action therein, of which notice has been given or mailed to the applicant, or within such shorter time, not less than thirty days, as fixed by the Commissioner in such action, the application shall be regarded as abandoned by the parties thereto, unless it be shown to the satisfaction of the Commissioner that such delay was unavoidable.

[2] Therefore, by example, an unavoidable delay in the payment of the Filing Fee might occur if a reply is shipped by the US Postal Service, but due to catastrophic accident, the delivery is not made.

[3] See: *Changes to Patent Practice and Procedure; Final Rule Notice*, 62 *Fed. Reg.* at 53158-59 (October 10, 1997), 1203 *Off. Gaz. Pat. Office* at 86-87 (October 21, 1997).

[4] See: In re Application of G, 11 USPQ2d 1378, 1380 (Comm'r Pats. 1989).

[5] See: Diligence in Filing Petitions to Revive and Petitions to Withdraw the Holding of Abandonment, 1124 Off. Gaz. Pat. Office 33 (March 19, 1991). It was and is Petitioner's burden to exercise diligence in seeking either to have the holding of abandonment withdrawn or the application revived. See 1124 Off. Gaz. Pat. Office supra.

[6] Therefore, by example, an unintentional delay in the reply might occur if the reply and transmittal form are to be prepared for shipment by the US Postal Service, but other pressing matters distract one's attention and the mail is not timely deposited for shipment.

Petitioner has satisfied the requirements of the regulation.

The record (including the petition filed on 7 November, 2005) does not necessitate a finding that the delay between midnight 4 November, 2004 (date of abandonment), and 7 November, 2005 (date of filing of grantable petition), was not unintentional.

Rather, the Patent and Trademark Office is relying in this matter on duty of candor and good faith of Petitioner's Counsel Nathan Prepelka (Reg. No. 43,016) when accepting Petitioner's representation that the delay in filing the response was unintentional.[7]

CONCLUSION

The petition under 37 C.F.R. §1.137(b) is **granted**.

The instant application is released to Technology Center 2600 for further processing in due course.

Telephone inquiries concerning this decision may be directed to the undersigned at (571) 272-3214.

John J. Gillon, Jr.
Senior Attorney
Office of Petitions

[7] See Changes to Patent Practice and Procedure, 62 Fed. Reg. at 53160 and 53178, 1203 Off. Gaz. Pat. Office at 88 and 103 (responses to comments 64 and 109)(applicant obligated under 37 C.F.R. §10.18 to inquire into the underlying facts and circumstances when providing the statement required by 37 C.F.R. §1.137(b) to the Patent and Trademark Office).

UNITED STATES PATENT AND TRADEMARK OFFICE

COMMISSIONER FOR PATENTS
UNITED STATES PATENT AND TRADEMARK OFFICE
P.O. BOX 1450
ALEXANDRIA, VA 22313-1450
WWW.USPTO.GOV

Paper No. 4

MYERS BIGEL SIBLEY & SAJOVEC
PO BOX 37428
RALEIGH NC 27627

COPY MAILED

JUN 1 6 2003

OFFICE OF PETITIONS

In re Application of
Lee, et al.
Application No. 10/388,353
Filed: March 13, 2003
Attorney Docket No. 5649-1024
For: METHODS OF FORMING SILICIDE LAYERS ON SOURCE/DRAIN REGIONS OF MOS TRANSISTORS AND MOS TRANSISTORS SO FORMED

: DECISION GRANTING
: PETITION

This is a decision on the petition under 37 CFR 1.10(c), filed May 30, 2003 (certificate of mailing date May 28, 2003), requesting that the above-identified application be accorded a filing date of March 13, 2003 rather than the presently accorded filing date of March 14, 2003.

Petitioners request the earlier filing date on the basis that the application was deposited in Express Mail service of the United States Postal Service (USPS) on March 13, 2003, pursuant to the requirements of 37 CFR 1.10. The petition is accompanied by a copy of Express Mail label no. EV193630582US showing no "date-in" but showing a USPS date stamp of MAR 13 2003. The same Express Mail label number is listed on the original UTILITY PATENT APPLICATION TRANSMITTAL LETTER AND FEE TRANSMITTAL FROM (37 CFR 1.53(b) found in the application file. In addition, the Track and Confirm printout from the USPS website shows that a package associated with Express Mail label no. EV193630582US was accepted on March 13, 2003.

The evidence presented establishes that the Express Mail package associated with Express Mail label no. EV193630582US was deposited with the USPS on March 13, 2003.

Accordingly, the petition is **GRANTED**.

A petition under 37 CFR 1.10 is feeless. Therefore, pursuant to petitioners' authorization, the $130.00 petition fee will be credited to deposit account no. 50-0220.

The application is being returned to the Office of Initial Patent Examination for correction of the filing date to **March 13, 2003**.

Any inquiries related to this decision should be directed to the undersigned at (703) 308-6712.

E. Shirene Willis

E. Shirene Willis
Senior Petitions Attorney
Office of Petitions

UNITED STATES PATENT AND TRADEMARK OFFICE

Commissioner for Patents
United States Patent and Trademark Office
P.O. Box 1450
Alexandria, VA 22313-1450
www.uspto.gov

MYERS BIGEL SIBLEY & SAJOVEC
PO BOX 37428
RALEIGH NC 27627

COPY MAILED

NOV 3 0 2004

OFFICE OF PETITIONS

In re Application of	:
Lee, et al.	: DECISION GRANTING
Application No. 10/388,354	: PETITION
Filed: March 14, 2003	:
Attorney Docket No. 5649-1084	:
For: METHODS OF FORMING SILICIDE LAYERS ON SOURCE/DRAIN REGIONS OF MOS TRANSISTORS AND MOS TRANSISTORS SO FORMED	

This is a decision on the petition under 37 CFR 1.10(c), filed September 27, 2004 (certificate of mailing date September 23, 2004), requesting that the above-identified application be accorded a filing date of March 13, 2003 rather than the presently accorded filing date of March 14, 2003. The instant petition is a resubmission of a May 28, 2003 petition.

Petitioners request the earlier filing date on the basis that the application was deposited in Express Mail service of the United States Postal Service (USPS) on March 13, 2003, pursuant to the requirements of 37 CFR 1.10. The petition is accompanied by a copy of Express Mail label no. EV193630582US showing no "date-in"**and** a USPS date stamp of MAR 13 2003. The same Express Mail label number is listed on the original transmittal letter found in the application file.

The evidence presented establishes that the Express Mail package associated with Express Mail label no. EV193630582US was deposited with the USPS on March 13, 2003.

Accordingly, the petition is granted. No fee has been or will be charged in connection with this petition.

The application is being returned to the Office of Initial Patent Examination for correction of the filing date to **March 13, 2003**.

Any inquiries related to this decision should be directed to the undersigned at (571) 272-3230.

E. Shirene Willis

E. Shirene Willis
Petitions Attorney
Office of Petitions

UNITED STATES PATENT AND TRADEMARK OFFICE

Commissioner for Patents
United States Patent and Trademark Office
P.O. Box 1450
Alexandria, VA 22313-1450
www.uspto.gov

Paper No. 6

MCKEE, VOORHEES & SEASE, P.L.C.
ATTN: PIONEER HI-BRED
801 GRAND AVENUE, SUITE 3200
DES MOINES, IA 50309-2721

COPY MAILED

JUN 1 0 2004

OFFICE OF PETITIONS

In re Application of :
Niu, et al. :
Application No. 10/388,359 : ON PETITION
Filed: March 13, 2003 :
Attorney Docket No. P05566US01 :

This is a decision on the petition filed July 14, 2003, requesting that the above-identified application be accorded a filing date of March 13, 2003.

The application was deposited on March 17, 2003. However, on June 3, 2003, the Office of Initial Patent Examination (OIPE) mailed a "Notice of Incomplete Nonprovisional Application" which stated a filing date was not accorded and that the application was deposited without drawings.

In response, on July 14, 2003, the instant petition was filed.

Petitioner states the drawings were inadvertently omitted upon filing, but that the parent application, serial number 60/364,062, was incorporated by reference by the Application Data Sheet Domestic Priority Information.

The argument is not persuasive. Mere reference to another application, patent, or publication is not an incorporation of anything therein into the application containing such reference for the purpose of the disclosure required by 35 U.S.C. 112 first paragraph. In re de Seversky, 474 F.2d 671, 177 USPQ 144 (CCPA 1973). See MPEP 608.01(p). Furthermore, the necessary incorporation by reference statement that refers to serial number 60/364,062 is not found in the specification or application transmittal letter. See MPEP 201.06(c). Accordingly, prior

application number 60/364,062 has not been properly incorporated by reference in the instant application.

However, it is noted that the nonprovisional application contains a process claim that includes the term "method" in it's introductory phrase and therefore drawings are not required.

MPEP 608.02 states:

> "An OIPE formality examiner should not treat an application without drawings as incomplete if drawings are not required. A drawing is not required for a filing date under 35 U.S.C. 111 and 113 if the application contains:
>
> > (A) at least one process claim including the term "process" or "method" in its introductory phrase;

Since the claims contain at least one process claim including the term "process" or "method" in its introductory phrase, drawings are not required in order to accord a filing date.

As such, the petition is granted.

If applicants desire that the drawings be added to the application, the appropriate procedure is by way of amendment requesting entry of the drawings. Any such amendment should be filed prior to the first action on the merits and will be considered by the primary examiner.

The application will be returned to the Office of Initial Patent Examination for processing with a filing date of March 13, 2003 with zero (0) drawings received on that date.

Telephone inquiries concerning this matter may be directed to the undersigned at (703) 306-9200.

Edward J. Tannouse
Petitions Attorney
Office of Petitions
United States Patent and Trademark Office

UNITED STATES PATENT AND TRADEMARK OFFICE

Commissioner for Patents
United States Patent and Trademark Office
P.O. Box 1450
Alexandria, VA 22313-1450
www.uspto.gov

STERNE, KESSLER, GOLDSTEIN & FOX PLLC
1100 NEW YORK AVENUE, N.W.
WASHINGTON DC 20005

COPY MAILED

MAR 0 4 2005

OFFICE OF PETITIONS

ON PETITION

In re Application of :
Hank F. Kung et al :
Application No. 10/388,363 :
Filed: March 14, 2003 :
Attorney Docket No. 1694.0470001/JMC/BLS :

This is a decision on the petition, filed February 23, 2005, under 37 CFR 1.313(c)(2) to withdraw the above-identified application from issue after payment of the issue fee.

The petition is **GRANTED**.

The above-identified application is withdrawn from issue for consideration of a submission under 37 CFR 1.114 (request for continued examination). See 37 CFR 1.313(c)(2).

Petitioner is advised that the issue fee paid on October 19, 2004 in the above-identified application cannot be refunded. If, however, the above-identified application is again allowed, petitioner may request that it be applied towards the issue fee required by the new Notice of Allowance.[1]

Telephone inquiries should be directed to the undersigned at (571) 272-3208.

The examiner of Technology Center AU 1621 will consider the request for continued examination under 37 CFR 1.114.

Karen Creasy

Karen Creasy
Petitions Examiner
Office of Petitions
Office of the Deputy Commissioner
for Patent Examination Policy

---

[1] The request to apply the issue fee to the new Notice may be satisfied by completing and returning the new Issue Fee Transmittal Form PTOL-85(b), which includes the following language thereon: "Commissioner for Patents is requested to apply the Issue Fee and Publication Fee (if any) or re-apply any previously paid issue fee to the application identified above." Petitioner is advised that, whether a fee is indicated as being due or not, the Issue Fee Transmittal Form **must** be completed and timely submitted to avoid abandonment. Note the language in bold text on the first page of the Notice of Allowance and Fee(s) Due (PTOL-85).

UNITED STATES PATENT AND TRADEMARK OFFICE

COMMISSIONER FOR PATENTS
UNITED STATES PATENT AND TRADEMARK OFFICE
P.O. BOX 1450
ALEXANDRIA, VA 22313-1450
www.uspto.gov

Paper No. _____

Date : March 4, 2005

TO : Director, Office of Patent Publication

FROM : Office of the Deputy Commissioner
for Patent Examination Policy

SUBJECT : Withdrawal from Issue of

Applicant(s) :Hank F. Kung et al
Application No. :10/388,363
Filed :March 14, 2003

The above-identified application has been assigned Patent No. 6,864,393 and an issue date of March 8, 2005.

It is hereby directed that this application be withdrawn from issue at the request of the applicant.

Do not refund the issue fee.

The following erratum should be published in the Official Gazette if the above-identified application is published in the OG of March 8, 2005:

"All reference to Patent No. 6,864,393 to Hank F. Kung et al of Pennsylvania for FLUORINATED PHENYL THIOPHENYL DERIVATIVES AND THEIR USE FOR IMAGING SEROTONIN TRANSPORTERS appearing in the Official Gazette of March 8, 2005 should be deleted since no patent was granted."

Karen Creasy

Karen Creasy
Petitions Examiner
Office of Petitions
Office of the Deputy Commissioner
for Patent Examination Policy

cc: Paul Harrison, Crystal Park 3-441 (FAX-306-2737)
Deneise Boyd, Crystal Park 2, Suite 1100 (FAX-308-5413)
Mary Louise McAskill, Crystal Park 3-910 (FAX 305-4372)
Niomi Farmer, Crystal Park 3-910 (FAX-305-4372)
Mary E. Johnson (Cookie), P/OCS, CM1-6D07
Duane Davis (CDS), CM1-6A07
Tamara Greene, Crystal Park 3-908

UNITED STATES PATENT AND TRADEMARK OFFICE

Commissioner for Patents
United States Patent and Trademark Office
P.O. Box 1450
Alexandria, VA 22313-1450
www.uspto.gov

LaHive & Cockfield, LLP
28 State Street
Boston, Massachusetts 02109

COPY MAILED

NOV 13 2006

OFFICE OF PETITIONS

In re Application of
Basi et al.
Application No. 10/388,389
Filed: March 12, 2003
Attorney Docket No. ELN-002CP

: DECISION HOLDING PETITION IN ABEYANCE

This is a decision on the "APPLICATION FOR PATENT TERM ADJUSTMENT INCLUDING REQUEST FOR RECONSIDERATION UNDER 37 CFR 1.705(b)" timely [1]filed August 30, 2006 requesting that the Office adjust the calculation at the time of the notice of allowance from a determination of 411 days to al least 583 days.

The instant application for patent term adjustment requests reconsideration of the patent term adjustment as it relates to the Office's failure to issue the patent within 3 years of the filing date, under 37 CFR 1.702(b) as well as failing to issue the application within four months of the payment of the issue fee a decision is being **held in abeyance** until after the actual patent date. Knowledge of the actual date the patent issues is required to calculate the amount, if any, of additional patent term patentee is entitled to for Office failure to issue the patent within 3 years. See § 1.703(b). Knowledge of the issue date is also necessary to determine whether or not the USPTO issued the application within four months of the payment of the issue fee and all other requirements being satisfied. See 37 CFR 1.702(a)(4).

Patentees are given **TWO (2) MONTHS** from the issue date of the patent to file a written request for reconsideration of the patent term adjustment for Office failure to issue the patent within 3 years and whether the Office issued the application within four months of the payment of the issue fee. A copy of this decision should accompany the request. Patentee may seek such consideration without payment of an additional fee. However, as to all other bases for seeking reconsideration of the patent term adjustment indicated in the patent, all requirements of § 1.705(d) must be met. Requests for reconsideration on other bases must be timely filed and must include payment of the required fee.

---

[1]Issue fee paid on August 31, 2006.

Petitioner is reminded that if an application is entitled to an adjustment under 35 U.S.C. 154(b)(1)(B), the entire period during which the application (except for periods excluded under 35 U.S.C. 154(b)(1)(B)(i)-(iii)), and not just the period beginning three years after the actual filing date of the application, is the period of delay under 35 U.S.C. 154(b)(1)(B) in determining whether periods of delay overlap under 35 U.S.C. 154(b)(2)(A). Thus, any days of delay for Office issuance of the patent more than 3 years after the filing date of the application which overlap with the days of patent term adjustment accorded prior to the issuance of the patent will not result in any additional patent term adjustment. See 35 U.S.C. 154(b)(1)(B), 35 U.S.C. 154(b)(2)(A), and 37 CFR § 1.703(f). See also *Revision of Patent Term Extension and Patent Term Adjustment Provisions*; *Final Rule*, 69 Fed. Reg. 21704 (April 22, 2004).

The office also notes that at the time of the mailing of allowance, the amount of PTA is four hundred and eleven days (411) days with five hundred and fifty-nine (559) days of administrative delay pursuant to 37 CFR 1.702(a)(1). Applicant delayed twenty-six (26) days pursuant to 37 CFR 1.704(c)(8) and one hundred and twenty-two (122) days of applicant delay under 37 CFR 1.704(b).

The Office acknowledges submission of the $200.00 fee set forth in 37 CFR 1.18(e). No additional fees are required.

The application file is being forwarded to the Office of Patent Publication for issuance of the patent. Any Office delays in issuance of the patent more than four months past the payment of the issue fee and more than three years after the filing date will be provided for in the issuance notification letter mailed prior to the issuance of the patent.

Telephone inquiries specific to this matter should be directed to Kery Fries, Senior Legal Advisor, Office of Patent Legal Administration, at (571) 272-7757.

Kery Fries

Kery Fries
Senior Legal Advisor
Office of Patent Legal Administration
Office of Deputy Commissioner
for Patent Examination Policy

cc: Pair calculation

UNITED STATES PATENT AND TRADEMARK OFFICE

Commissioner for Patents
United States Patent and Trademark Office
P.O. Box 1450
Alexandria, VA 22313-1450
www.uspto.gov

COPY MAILED

SEP 13 2007

OFFICE OF PETITIONS

LaHive & Cockfield, LLP
One Post Office Square
Boston, Massachusetts 02109

In re Application of
Basi et al.
Application No. 10/388,389
Patent No. 7,179,892
Filed: March 12, 2003
Attorney Docket: ELN-002CP

: DECISION DENYING PTA REQUEST

This decision is in response to Patentees' "REQUEST FOR RECONSIDERATION OF PATENT TERM ADJUSTMENT under 37 CFR 1.705(d)" timely[1] filed on April 20, 2007 requesting that the Patent Term Adjustment be adjusted from a determination of 462 days to a determination of 756 days. Patentees initially filed an application for Patent Term Adjustment on August 30, 2006 requesting that the Office provide patentees with a minimum of 583 days partially based upon the Office failure to issue the application within three years as required under 35 U.S.C. 154(b)(1)(B) 37 CFR 1.702(b).

The Office's decision on November 13, 2006 stated that it would hold the "petition" in abeyance until the date the patent issued at which time the Office would ascertain whether or not the Office had met the three-year requirement as well as determine whether the periods were overlapping under 35 U.S.C. 154(b)(2)(A) and 37 CFR 1.703(f). The Office advised patentees that if they were not satisfied with the determination at the time of the issuance of the patentee that they could request reconsideration of the patent term adjustment within two months of issuance of patent.

Patentees' petition is **DENIED**. The PTA determination of 462 days is correct.

Patentees argue that the Office erred in failing to provide an adjustment for over 3 years to issue from the from the filing of the application under 37 CFR 1.704(b). Patentees assert that the proper amount of PTA related to the 3-year provision is three hundred and forty-five (345) days. Patentees assert that none of the days of the three year time frame overlap with any of the days of the fourteen month requirements of 37 CFR 1.702(a)(1); however, patentees assert the three hundred and forty-five (345) days of PTA overlap with the fifty-one (51) days of PTA accrued under 37 CFR 1.702(a)(4). Accordingly, patentees believe that the correct amount of Office delay is nine hundred and four (559 + 345=904)[2] and that the proper amount of applicant delay is

[1]Patent issued on February 20 2007.

[2]Since the 51 days are considered overlapping the 345 days no additional time is being sought for the failure to meet the requirements of 37 CFR 1.702(a)(4).

days is one hundred and forty-eight days (148) as determined by the Office in the PTA calculation.

Patentees arguments are not persuasive. Patentees are advised that if an application is entitled to an adjustment under 35 U.S.C. 154(b)(1)(B), the entire period during which the application (except for periods excluded under 35 U.S.C. 154(b)(1)(B)(i)-(iii)), and not just the period beginning three years after the actual filing date of the application, is the period of delay under 35 U.S.C. 154(b)(1)(B) in determining whether periods of delay overlap under 35 U.S.C. 154(b)(2)(A). Thus, any days of delay for Office issuance of the patent more than 3 years after the filing date of the application which overlap with the days of patent term adjustment accorded prior to the issuance of the patent will not result in any additional patent term adjustment. See 35 U.S.C. 154(b)(1)(B), 35 U.S.C. 154(b)(2)(A), and 37 CFR § 1.703(f). See *Changes to Implement Patent Term Adjustment Under Twenty Year Term; Final Rule,* 65 Fed. Reg. 54366 (Sept. 18, 2000). See also *Revision of Patent Term Extension and Patent Term Adjustment Provisions; Final Rule*, 69 Fed. Reg. 21704 (April 22, 2004). See also *Explanation of 37 CFR 1.703(f)and of the United States Patent and Trademark Office Interpretation of 35 U.S.C. 154(b)(2)(A)* 69 Fed. Reg. 34283 (June 21, 2004). Since the Office delays under 37 CFR 1.702(a)(1) and (a)(4) are greater than the delay for 37 CFR 1.702(b), applicants will receive no additional PTA time.

Accordingly, the Office maintains that the proper amount of PTA at the time of the issuance of the patent is **four hundred and sixty two** days. The Office delay is calculated by the accrual of five hundred and fifty-nine (559) days under 37 CFR 1.702(a)(1) and fifty-one days under 37 CFR 1.702(a)(4) reduced by 122 days under 37 CFR 1.702(b) and 26 days pursuant to 37 CFR 1.704(c)(8).

The Office notes that in accordance with 37 CFR 1.705(b)(2)(iii) patentees have advised the Office that a terminal disclaimer has been filed in this application that would disclaim the terminal part of the patent which would extend beyond the last day of the statutory term of patent 7,189,819. The Office does not determine the expiration date of the patents but notes on the front of all patents that "Subject to any disclaimer, the term of this patent is extended or adjusted under 35 U.S.C. 154(b) by *** days." Accordingly, it is the responsibility of the patentees to ascertain whether any of the PTA determination can be included when ascertaining the patent expiration date.

After review of this decision, this application will be forwarded to the file repository for storage of such patented file.

The Office acknowledges that applicant has previously submitted the $200 application fee. No additional fees are required in rendering this decision.

Any questions concerning the issuance of this patent should be directed to Kery A. Fries, Office of Patent Legal Administration, Office of Deputy Commissioner for Patent Examination Policy at 571-272-7757

Robert W. Bahr
Senior Patent Counsel
Office of the Deputy Commissioner
for Patent Examination Policy

UNITED STATES PATENT AND TRADEMARK OFFICE

Commissioner for Patents
United States Patent and Trademark Office
P.O. Box 1450
Alexandria, VA 22313-1450
www.uspto.gov

LaHive & Cockfield, LLP
Floor 30, Suite 3000
One Post Office Square
Boston, Massachusetts 02109

COPY MAILED
MAR 18 2010

In re Patent No. 7,179,892	:
Basi et al.	: DECISION UPON REMAND AND
Issue Date: Feb. 20,2007	: RECONSIDERATION OF
Application No. 10/388,389	: PATENT TERM ADJUSTMENT
Filed: March 14, 2003	: AND NOTICE OF INTENT
Attorney Docket No. ELN-002CP	: TO ISSUE CERTIFICATE OF
Title: Human Antibodies that	: CORRECTION
Recognized Beta Amyloid	:
Peptides	

This is a decision following remand from the District Court for the District of Columbia regarding the patent term adjustment indicated on the above-identified patent. The Court remanded this matter to the U.S. Patent and Trademark Office for recalculation of the patent term adjustment in accordance with the decision in Wyeth & Elan Pharma Int'l Ltd. v. Kappos, 591 F.3d 1364 (Fed. Cir. 2010).

The patent term adjustment indicated on the above-identified patent has been recalculated as directed by the Court. The term of the above-identified patent is extended or adjusted by seven hundred and fifty-six (756) days.

The application is being forwarded to the Certificates Branch for issuance of a certificate of correction indicating that the term of the above-identified patent is extended or adjusted by seven hundred and fifty-six (756) days.

Telephone inquiries specific to this matter should be directed to Senior Legal Advisor, Kery A. Fries at (571) 272-7757.

/Kery A. Fries/

Kery A. Fries

Senior Legal Advisor Attorney
Office of Patent Legal Administration
Office of Associate Commissioner
For Patent Examination Policy

Enclosure: Copy of DRAFT Certificate of Correction

UNITED STATES PATENT AND TRADEMARK OFFICE

CERTIFICATE OF CORRECTION

PATENT : 7,179,892 B2

DATED : **Feb. 20, 2007** **DRAFT**

INVENTOR(S) : Basi et al.

It is certified that error appears in the above-identified patent and that said Letters Patent is hereby corrected as shown below:

On the cover page,

[*] Notice: Subject to any disclaimer, the term of this patent is extended or adjusted under 35 USC 154(b) by 462 days

Delete the phrase "by 462 days" and insert – by 756 days--

UNITED STATES PATENT AND TRADEMARK OFFICE

CERTIFICATE OF CORRECTION

PATENT : 7,179,892 B2

DATED : **Feb. 20, 2007** **DRAFT**

INVENTOR(S) : Basi et al.

It is certified that error appears in the above-identified patent and that said Letters Patent is hereby corrected as shown below:

On the cover page,

[*] Notice: Subject to any disclaimer, the term of this patent is extended or adjusted under 35 USC 154(b) by 462 days

Delete the phrase "by 462 days" and insert – by 756 days--

Day : Wednesday

PALM INTRANET

Date: 3/17/2010
Time: 12:14:22

PTA Calculations for Application: 10/388389			
Application Filing Date:	03/12/2003	PTO Delay (PTO):	610
Issue Date of Patent:	02/20/2007	Three Years:	0
Pre-Issue Petitions:	0	Applicant Delay (APPL):	148
Post-Issue Petitions:	0	Total PTA (days):	756
PTO Delay Adjustment:	294		

File Contents History

Number	Date	Contents Description	PTO	APPL	START
74	03/17/2010	ADJUSTMENT OF PTA CALCULATION BY PTO	294		
62.5	01/31/2007	PTA 36 MONTHS			
62	02/20/2007	PATENT ISSUE DATE USED IN PTA CALCULATION	51		55
61	01/17/2007	EXPORT TO FINAL DATA CAPTURE			
60	01/16/2007	FINISHED INITIAL DATA CAPTURE			
59	01/16/2007	DISPATCH TO FDC			
58	11/13/2006	MAIL-PETITION DECISION - DISMISSED			
57	08/30/2006	PETITION ENTERED			
56	09/07/2006	APPLICATION IS CONSIDERED READY FOR ISSUE			
55	08/31/2006	ISSUE FEE PAYMENT VERIFIED			
54	08/31/2006	ISSUE FEE PAYMENT RECEIVED			
52	06/20/2006	SEQUENCE FORWARDED TO PUBS ON TAPE			
51	06/05/2006	EXPORT TO INITIAL DATA CAPTURE			
49	05/31/2006	MAIL NOTICE OF ALLOWANCE			
48	05/31/2006	MAIL FORMAL DRAWINGS REQUIRED			
47	05/30/2006	ISSUE REVISION COMPLETED			
46	05/30/2006	FORMAL DRAWINGS REQUIRED			
45	05/30/2006	NOTICE OF ALLOWANCE DATA VERIFICATION COMPLETED			
44	05/30/2006	CASE DOCKETED TO EXAMINER IN GAU			
43	05/30/2006	NOTICE OF ALLOWABILITY			
42	05/25/2006	PARALEGAL TD ACCEPTED			
41	05/22/2006	MISCELLANEOUS INCOMING LETTER			
40	05/22/2006	MAIL EXAMINER INTERVIEW SUMMARY (PTOL - 413)			

39	07/07/2005	INFORMATION DISCLOSURE STATEMENT CONSIDERED			
38	03/20/2006	INFORMATION DISCLOSURE STATEMENT CONSIDERED			
37	05/04/2006	EXAMINER INTERVIEW SUMMARY RECORD (PTOL - 413)			
36	03/31/2006	RULE 47 / 48 CORRECTION OF INVENTORSHIP PAPERS FILED			
35	03/20/2006	REFERENCE CAPTURE ON IDS			
34	03/20/2006	INFORMATION DISCLOSURE STATEMENT (IDS) FILED		26	32
33	03/06/2006	DATE FORWARDED TO EXAMINER			
32	02/22/2006	RESPONSE TO ELECTION / RESTRICTION FILED			
31	02/22/2006	REQUEST FOR EXTENSION OF TIME - GRANTED			
30	11/22/2005	MAIL RESTRICTION REQUIREMENT	559		-1
29	11/18/2005	REQUIREMENT FOR RESTRICTION / ELECTION			
28	10/28/2005	CASE DOCKETED TO EXAMINER IN GAU			
27	07/07/2005	REFERENCE CAPTURE ON IDS			
26	07/07/2005	INFORMATION DISCLOSURE STATEMENT (IDS) FILED			
25	06/28/2005	CASE DOCKETED TO EXAMINER IN GAU			
24	05/23/2005	IFW TSS PROCESSING BY TECH CENTER COMPLETE			
23	05/23/2005	CASE DOCKETED TO EXAMINER IN GAU			
22	03/17/2004	CASE DOCKETED TO EXAMINER IN GAU			
21	01/28/2004	APPLICATION RETURN FROM OIPE			
20	01/28/2004	APPLICATION IS NOW COMPLETE			
19	12/23/2003	PAYMENT OF ADDITIONAL FILING FEE/PREEXAM		122	7
18	03/12/2003	CLAIM PRELIMINARY AMENDMENT			
14	01/16/2004	PRE-EXAM OFFICE ACTION WITHDRAWN			
13	01/16/2004	APPLICATION RETURN TO OIPE			
12	01/09/2004	APPLICATION DISPATCHED FROM OIPE			
11	01/09/2004	APPLICATION IS NOW COMPLETE			
9	12/23/2003	A STATEMENT BY ONE OR MORE INVENTORS SATISFYING THE REQUIREMENT UNDER 35 USC 115, OATH OF THE APPLIC			
8	12/19/2003	CORRESPONDENCE ADDRESS CHANGE			
7	05/23/2003	NOTICE MAILED--APPLICATION INCOMPLETE--			

		FILING DATE ASSIGNED			
6	04/30/2003	CLEARED BY L&R (LARS)			
5	04/29/2003	IFW SCAN & PACR AUTO SECURITY REVIEW			
4	04/02/2003	CRF IS GOOD TECHNICALLY / ENTERED INTO DATABASE			
3	04/01/2003	IFW SCAN & PACR AUTO SECURITY REVIEW			
2	03/12/2003	CRF DISK HAS BEEN RECEIVED BY PREEXAM / GROUP / PCT			
1	03/12/2003	INITIAL EXAM TEAM NN			

Search Another: Application# Search

EXPLANATION OF PTA CALCULATION

EXPLANATION OF PTE CALCULATION

To go back, right click here and select Back. To go forward, right click here and select Forward. To refresh, right click here and select Refresh.

Back to OASIS | Home page

UNITED STATES PATENT AND TRADEMARK OFFICE

Commissioner for Patents
United States Patent and Trademark Office
P.O. Box 1450
Alexandria, VA 22313-1450
www.uspto.gov

Townsend and Townsend and Crew, LLP
Two Embarcadero Center
8th Floor
San Francisco, CA 94111-3834

MAILED

MAR 25 2010

OFFICE OF PETITIONS

In re Patent No. 7,179,892	:
Basi et al.	: DECISION UPON REMAND AND
Issue Date: Feb. 20,2007	: RECONSIDERATION OF
Application No. 10/388,389	: PATENT TERM ADJUSTMENT
Filed: March 14, 2003	: AND NOTICE OF INTENT
Attorney Docket No. ELN-002CP	: TO ISSUE CERTIFICATE OF
Title: Human Antibodies that	: CORRECTION
Recognized Beta Amyloid	:
Peptides	

This USPTO is re-mailing the decision mailed by the USPTO on 3/18/2010 to the proper correspondence address of record. The Office failed to change the correspondence address of record when a new power of attorney was filed on July 3, 2008. The USPTO apologizes for any inconveniences this may have triggered.

This is a decision following remand from the District Court for the District of Columbia regarding the patent term adjustment indicated on the above-identified patent. The Court remanded this matter to the U.S. Patent and Trademark Office for recalculation of the patent term adjustment in accordance with the decision in Wyeth & Elan Pharma Int'l Ltd. v. Kappos, 591 F.3d 1364 (Fed. Cir. 2010).

The patent term adjustment indicated on the above-identified patent has been recalculated as directed by the Court. The term of the above-identified patent is extended or adjusted by seven hundred and fifty-six (756) days.

The application is being forwarded to the Certificates Branch for issuance of a certificate of correction indicating that the term of the above-identified patent is extended or adjusted by seven hundred and fifty-six (756) days.

Telephone inquiries specific to this matter should be directed to Senior Legal Advisor, Kery A. Fries at (571) 272-7757.

/Kery A. Fries/

Kery A. Fries
Senior Legal Advisor Attorney
Office of Patent Legal Administration
Office of Associate Commissioner
For Patent Examination Policy

Enclosure: Copy of DRAFT Certificate of Correction

UNITED STATES PATENT AND TRADEMARK OFFICE

CERTIFICATE OF CORRECTION

PATENT : 7,179,892 B2

DATED : **Feb. 20, 2007** **DRAFT**

INVENTOR(S) : Basi et al.

It is certified that error appears in the above-identified patent and that said Letters Patent is hereby corrected as shown below:

On the cover page,

[*] Notice: Subject to any disclaimer, the term of this patent is extended or adjusted under 35 USC 154(b) by 462 days

Delete the phrase "by 462 days" and insert – by 756 days--

UNITED STATES PATENT AND TRADEMARK OFFICE

COMMISSIONER FOR PATENTS
UNITED STATES PATENT AND TRADEMARK OFFICE
P.O. BOX 1450
ALEXANDRIA, VA 22313-1450
www.uspto.gov

WOLF GREENFIELD & SACKS, PC
FEDERAL RESERVE PLAZA
600 ATLANTIC AVENUE
BOSTON MA 02210-2211

COPY MAILED

MAY 1 0 2004

OFFICE OF PETITIONS

Applicant: Comstock et al.
Appl. No.: 10/388,390
Filing Date: March 13, 2003
Title: METHOD FOR OVEREXPRESSION OF ZWITTERIONIC POLYSACCHARIDES
Attorney Docket No.: B0801.70279US00
Pub. No.: US 2003/0219413 A1
Pub. Date: November 27, 2003

This is in response to the request for correction of patent application publication under 37 CFR 1.221(b), which was filed on December 22, 2003.

The request is DISMISSED.

Applicant requests the application be republished because the patent application publication is alleged to contain material mistakes because it fails to recite canceled claims 2, 3, 7, 8, 11-13, 15, 16, 20, 21, 23-26, 32, 33, 41-44, 46-48, 50, 51, 56-59 and 61-61, which were originally filed in the application and it also fails to recite claims 4, 9, 10, 17, 22, 29 and 40 as originally filed in compliance with 37 CFR 1.215. Applicant claims that the failure to publish these claims are material errors affecting the scope of the provisional rights that the applicant may seek to enforce upon issuance of the patent.

37 CFR 1.221(b) is applicable "only when the Office makes a material mistake which is apparent from Office records . . . Any request for a corrected publication or revised patent application publication other than provided as provided in paragraph (a) of this section must be filed within two months from the date of the patent application publication. This period is not extendable."

On March 13, 2003, applicant filed the above identified applications with claims 1-65 without the filing fee and the additional claims fees. On June 9, 2003, the Office mailed a Notice to File Missing Parts of Nonprovisional Application, requiring the appropriate fees. On July 21, 2003, Applicant filed a response with an amendment cancelling claims 2, 3, 7, 8, 11-13, 15, 16, 20, 21, 23-26, 32, 33, 41-44, 46-48, 50, 51, 56-59 and 61-61, which were originally filed in the application and amending claims 4, 9, 10, 17, 22, 29 and 40 and paid the filing fees. On November 27, 2003, the Office published the patent application with the claims as amended on July 21, 2003.

Applicant argues that the application was not published in accordance with 37 CFR 1.215, as the patent application publication included the amendment which canceled and amended some of the claims, which will affect the scope of the provisional rights that the applicant may seek to enforce.

The Office has recently changed the procedures for publication of patent applications so as to publish applications as amended. By publishing applications as amended, it is anticipated that the invention claimed in the published patent application is more likely to be "substantially identical" to the invention claimed in the issued patent, as required by 35 U.S.C. 154(d)(2). Moreover, by publishing applications as amended, the public has a better opportunity to determine the invention for which a patent is actually being sought, **as only the claims for which applicant has paid, and that are subject to examination, will be reflected in the patent application publication**. The application was published in accordance with the new procedures, wherein patent applications publications may now include amendments. See Patent Application Publications May Now Include Amendments, 1281 Off. Gaz. Pat. Office Notices 53 (April 13, 2004).

Publication of a more recently amended set of claims from those originally filed is not considered a material error, especially when the fee was not paid for the originally filed claims was not paid.

The applicant is advised that the canceled claims can be published, if an amendment is filed adding the claims and paying the appropriate fee, a "request for republication of an application previously published" may be filed under 37 CFR 1.221(a). Such a request for republication "must include a copy of the application in compliance with the Office's electronic filing system requirements and be accompanied by the publication fee set forth in § 1.18(d) and the processing fee set forth in § 1.17(i)." If the request for republication does not comply with the electronic filing system requirements, the republication will not take place and the publication fee set forth in § 1.18(d) will be refunded. The processing fee will be retained.

Any request for republication under 37 CFR 1.221(b), should be submitted via the EFS system and questions or request for reconsideration of this decision, should be addressed as follows:

By mail to: Mail Stop PGPUB
Commissioner for Patents
P.O. Box 1450
Alexandria, VA 22313-1450

By facsimile: 703-872-9306

The application will be examined in due course.

Inquiries relating to this matter may be directed to Mark Polutta at (703) 308-8122 (voice) or (703) 746-3465 (facsimile).

Mark O. Polutta
Office of Patent Legal Administration
Office of the Deputy Commissioner
for Patent Examination Policy

UNITED STATES PATENT AND TRADEMARK OFFICE

Commissioner for Patents
United States Patent and Trademark Office
P.O. Box 1450
Alexandria, VA 22313-1450
www.uspto.gov

DEC -7 2006

FITZPATRICK CELLA HARPER & SCINTO
30 ROCKEFELLER PLAZA
NEW YORK NY 10112

In re Application of:
Nanoj, Tatsuo, et al.
Serial No. 10/388,393
Filed: March 17, 20003
Docket: 00684.003463.
Title: LIQUID CONTAINER SEALING JACKET, AND METHOD FOR UNSEALING LIQUID CONTAINER FITTED WITH LIQUID CONTAINER JACKET

DECISION ON PETITION
UNDER 37 CFR § 1.181

This is a decision on the petition filed February 02, 2006 seeking review of the Examiner's requirement to resubmit copies of the priority documents. The petition was filed under 37 CFR § 1.182 and accompanied by a request to charge $130.00 to Deposit Account No. 06-1205. However, the deposit account will not be charged. The petition is being treated as a petition under 37 CFR § 1.181 for which no fee is required.

The petition is dismissed.

Petitioner has submitted a copy of a post card receipt having a stamped date of October 26, 2003 as evidence that certified copies of two priority applications were submitted. Petitioner argues that this is *prima facie* evidence of the submissions under MPEP 503. As part of additional documentation, petitioner filed via facsimile on July 06, 2006 copies of the cover page of the priority papers but asserts at this time he does not have copies of the full documents.

MPEP 503 states that the postcard receipt will not serve as *prima facie* evidence of receipt of any item that is not adequately itemized on the postcard. A review of the postcard receipt indicates that the priority papers were not particularly identified but merely set forth as "Claim for priority and certified copies of two priority applications." The applications were not specifically itemized. It is not clear from this statement what was submitted. Petitioner's additional submission of the copy of the ribboned cover page cannot be related to the postcard receipt to perfect the receipt.

MPEP 201.14(b) states that "[T]he filing of the priority papers under 35 U.S.C. 119(a)-(d) makes the record of the file of the United States patent complete." Neither the postcard receipt nor the additional submission alone or in combination aid in making the application complete. Moreover, while there may be no issue arising where priority papers need to be studied in depth, MPEP 201.15 discusses the situation when this needs to be done and states "[T]he most important aspect of the examiner's action pertaining to a right of priority is the determination of the identity of invention between the U.S. and the foreign applications. If the papers are not there, this cannot be done.

It is clear by statute, 35 U.S.C.§ 119 (b)(3), that the Director is authorized to require certified copies of priority papers when making a claim for priority. The examiner, as the Director's authorized representative, is requiring them. Moreover, in accordance with 37 CFR § 1.55(2), the claim is not perfected without the copies. Petitioner's assertion that the USPTO lost or misplaced the priority documents is moot because petitioner has not provided the evidence to show that such were ever received. They are not present in the official record and they are required for grant of priority.

PETITION DISMISSED.

Petitioner may file a request for reconsideration of this decision, without fee. However, such request must be filed within two months of the date of this decision. See 37 CFR § 1.181(f).

Any inquiry regarding this decision should be directed to Allan N. Shoap, Special Program Examiner, at (571) 272-4514.

Karen M. Young

Karen M. Young, Director
Technology Center 3700

UNITED STATES PATENT AND TRADEMARK OFFICE

Commissioner for Patents
United States Patent and Trademark Office
P.O. Box 1450
Alexandria, VA 22313-1450
www.uspto.gov

FITZPATRICK CELLA HARPER & SCINTO
30 ROCKEFELLER PLAZA
NEW YORK NY 10112

In re Application of:
NANJO, TATSUO et al
Serial No. 10/388,393
Filed: Ma. 17, 2003
Docket: 000309-00077
Title: LIQUID CONTAINER SEALING JACKET, AND METHOD FOR UNSEALING LIQUID CONTAINER FITTED WITH LIQUID CONTAINER JACKET

DECISION ON PETITION
UNDER 37 CFR § 1.181

This is a decision on the petition filed Jun. 16, 2008 under 37 CFR 1.181 requesting withdrawal of the finality of the last Office action mailed Apr. 14, 2008.

The petition is granted.

It is noted that the record does not show the previously indicated allowable claims 4 and 7 were substantively amended in the amendment of Feb. 7, 2008. In particular, the applicant merely placing the dependent claims 4 and 7 in independent form. There were no changes in scope of the claims. Therefore, the rejection of at least claims 4 and 7 under the ground of nonstatutory obviousness-type patenting was not necessitated by the amendment filed on Feb. 28, 2008. As such, the finality of the Office actions issued on Apr. 14, 2008 is premature and thus the finality of the action is hereby withdrawn. Since the finality is being withdrawn, the amendment filed on Jun. 16, 2008 in responding to the Office action dated Apr. 14, 2008 is hereby treat as a 37 CFR § 1.111 amendment. This amendment filed on Jun. 16, is hereby entered and a new Office action will be issued in due course.

After consulting with the examiner, it was agreed that the finality of the last Office action of Apr. 14, 2008 should be withdrawn. The requested relief is granted.

Any questions regarding this decision should be directed to Special Program Examiner, Henry Yuen, at 571-272-4856.

PETITION GRANTED.

Marc Jimenez for
Frederick R. Schmidt, Director
Technology Center 3700

UNITED STATES PATENT AND TRADEMARK OFFICE

Commissioner for Patents
United States Patent and Trademark Office
P.O. Box 1450
Alexandria, VA 22313-1450
www.uspto.gov

VOLENTINE FRANCOS
SUITE 150
12200 SUNRISE VALLEY DRIVE
RESTON, VA 20191

COPY MAILED

APR 26 2005

OFFICE OF PETITIONS

ON PETITION

In re Application of :
Takashi Ohsumi :
Application No. 10/388,407 :
Filed: March 17, 2003 :
Attorney Docket No. IIZ.003D3 :

This is a decision on the petition under 37 CFR 1.313(c)(2), filed April 25, 2005, to withdraw the above-identified application from issue after payment of the issue fee.

The petition is **GRANTED**.

The above-identified application is withdrawn from issue for consideration of a submission under 37 CFR 1.114 (request for continued examination). See 37 CFR 1.313(c)(2).

Petitioner is advised that the issue fee paid on February 9, 2005 in the above-identified application cannot be refunded. If, however, the above-identified application is again allowed, petitioner may request that it be applied towards the issue fee required by the new Notice of Allowance.[1]

The correspondence filed on April 25, 2005 is not signed by an attorney of record. However, in accordance with 37 CFR 1.34(a), the signature of Andrew J. Telesz, Jr. appearing on the correspondence shall constitute a representation to the United States Patent and Trademark Office that he is authorized to represent the particular party in whose behalf he acts. However, if Mr. Telesz desires to receive correspondence regarding this file, the appropriate power of attorney documentation must be submitted. A courtesy copy of this decision is being mailed to Mr. Telesz, the petitioner herein. However, until otherwise instructed, all future correspondence regarding this application file will be directed solely to the above-noted correspondence address of record.

---

[1] The request to apply the issue fee to the new Notice may be satisfied by completing and returning the new Issue Fee Transmittal Form PTOL-85(b), which includes the following language thereon: "Commissioner for Patents is requested to apply the Issue Fee and Publication Fee (if any) or re-apply any previously paid issue fee to the application identified above." Petitioner is advised that, whether a fee is indicated as being due or not, the Issue Fee Transmittal Form **must** be completed and timely submitted to avoid abandonment. Note the language in bold text on the first page of the Notice of Allowance and Fee(s) Due (PTOL-85).

Telephone inquiries should be directed to Wan Laymon at (571) 272-3220.

This matter is being referred to Technology Center AU 2815 for processing of the request for continued examination under 37 CFR 1.114.

Wan Laymon

Wan Laymon
Petitions Examiner
Office of Petitions
Office of the Deputy Commissioner
for Patent Examination Policy

cc: VOLENTINE FRANCOS & WHITT
ONE FREEDOM SQUARE
11951 FREEDOM DRIVE
SUITE 1260
RESTON, VA 20190

UNITED STATES PATENT AND TRADEMARK OFFICE

Commissioner for Patents
United States Patent and Trademark Office
P.O. Box 1450
Alexandria, VA 22313-1450
www.uspto.gov

AUG 0 4 2005

ARMSTRONG, KRATZ, QUINTOS, HANSON, & BROOKS, LLP
1725 K STREET, NW
SUITE 1000
WASHINGTON, DC 20006

In re Application of:
KAZUO ITIBASHI ET AL.
Serial No.: 10/388,447
Filed: 17 March 2003
Docket Number 970749C

DECISION ON PETITION TO WITHDRAW HOLDING OF ABANDONMENT

This is a decision on the petition filed on October 13, 2004, to withdraw the holding of abandonment of the above-identified application under 37 C.F.R. § 1.181.

The petition to withdraw the holding of abandonment is **GRANTED**.

An Office action (requirement for restriction) was mailed October 31, 2003, setting a one-month shortened statutory period for reply. In the apparent absence of receipt of a response, a Notice of Abandonment was mailed on October 6, 2004.

Petitioner asserts that a reply was timely filed. In support of the assertion that a reply was timely filed, petitioner submitted the following papers as evidence of timely submission: 1) copies of a preliminary amendment filed with the Office on March 17, 2003, and resent to the examiner by facsimile on November 17, 2003, and 2) a copy of an Examiner Interview Summary form, signed by the examiner of record, dated November 20, 2003.

Petitioner does not allege that a responsive reply to the Office action was filed. Petitioner instead alleges that no reply need have been filed for two reasons. First, that the Office action addressed claims which were cancelled. Second, a telephone interview with the examiner of record on November 20, 2003, established that the examiner would "send an Office action regarding claims 49-60.

The first issue concerns the Office's requirements for a response to an Office action. "In order to be entitled to reconsideration or further examination, the applicant or patent owner must reply to the Office action. The reply by the applicant or patent owner must be reduced to a writing which distinctly and specifically points out the

supposed errors in the examiner's action..." 37 C.F.R. § 1.111.

Petitioner did not "reply to the Office action" in a manner in which the reply was "reduced to a writing which distinctly and specifically points out the supposed errors in the examiner's action." The facsimile copy mailed on November 17, 2003, was not indicated as being a reply to an Office action, nor did it point out supposed errors in the action. The only communication which followed the Office action of October 31, 2003, and was in response to that action was the "Interview Summary" form dated November 20, 2003. While the "Interview Summary" fulfilled the reply and writing requirements, it failed to point out the specific errors in the action (for instance, by stating that the restriction was directed to the cancelled claims).

For these reasons, petitioner never met the requirements for response set forth in 37 C.F.R. § 1.111.

The second issue concerns the burden of reply when the examiner has stated in a written communication that an Office action will be sent. Written communications mailed by the Office should be considered as containing factual statements. Since the statement that the examiner will "send an Office action" was unequivocal, petitioner should be able to fairly and firmly rely upon that statement.

For the reasons given above, the Notice of Abandonment mailed October 6, 2004, is hereby vacated the holding of abandonment is withdrawn, and the holding of abandonment is withdrawn. Inconvenience to petitioner is regretted.

As stated in the "Interview Summary", the examiner will withdraw the restriction requirement and send an Office Action regarding claims 49-60.

Any inquiry regarding this decision should be directed to Clayton E. LaBalle, Special Program Examiner, at (571) 272-1594.

James Dwyer

Sharon A. Gibson, Director
Technology Center 2800 - Semiconductors,
Electrical & Optical Systems & Components

UNITED STATES PATENT AND TRADEMARK OFFICE

Commissioner for Patents
United States Patent and Trademark Office
P.O. Box 1450
Alexandria, VA 22313-1450
www.uspto.gov

WESTERMAN HATTORI DANIELS & ADRIAN, LLP
1250 CONNECTICUT AVENUE, NW
SUITE 700
WASHINGTON, DC 20036

COPY MAILED
AUG 24 2006
OFFICE OF PETITIONS

In re Application of :
Takashi Eshima et al :
Application No. 10/388,448 : ON PETITION
Filed: March 17, 2003 :
Attorney Docket No. 030247

This is a decision on the petition filed, August 23, 2006 under 37 CFR 1.313(c)(2) to withdraw the above-identified application from issue after payment of the issue fee.

The petition is **GRANTED**.

The above-identified application is withdrawn from issue for consideration of a submission under 37 CFR 1.114 (request for continued examination). See 37 CFR 1.313(c)(2).

Petitioner is advised that the issue fee paid on April 7, 2006 in the above-identified application cannot be refunded. If, however, the above-identified application is again allowed, petitioner may request that it be applied towards the issue fee required by the new Notice of Allowance.[1]

Telephone inquiries should be directed to Irvin Dingle at (571) 272-3210.

This matter is being referred to Technology Center AU 2814 for processing of the request for continued examination under 37 CFR 1.114 and for consideration of the concurrently filed Information Disclosure Statement.

Irvin Dingle
Petitions Examiner
Office of Petitions

---

[1] The request to apply the issue fee to the new Notice may be satisfied by completing and returning the new Issue Fee Transmittal Form PTOL-85(b), which includes the following language thereon: Commissioner for Patents is requested to apply the Issue Fee and Publication Fee (if any) or re-apply any previously paid issue fee to the application identified above. Petitioner is advised that, whether a fee is indicated as being due or not, the Issue Fee Transmittal Form **must** be completed and timely submitted to avoid abandonment. Note the language in bold text on the first page of the Notice of Allowance and Fee(s) Due (PTOL-85).

UNITED STATES PATENT AND TRADEMARK OFFICE

Commissioner for Patents
United States Patent and Trademark Office
P.O. Box 1450
Alexandria, VA 22313-1450
www.uspto.gov

ARMSTRONG KRATZ QUINTOS
HANSON & BROOKS LLP
1725 K STREET NW, SUITE 1000
WASHINGTON DC 20006

COPY MAILED

JUL 13 2004

OFFICE OF PETITIONS

In re Application of
Eiji Maruyama
Application No. 10/388,449
Filed: March 17, 2003
Attorney Docket No. 030344

: DECISION GRANTING PETITION
: UNDER 37 CFR 313(c)(2)

This is a decision on the petition under 37 CFR 1.313(b)(5), filed July 12, 2004, which is being treated as a petition under 37 CFR 1.313(c)(2) to withdraw the above-identified application from issue after payment of the issue fee.

The petition is **GRANTED**.

The above-identified application is withdrawn from issue for consideration of a submission under 37 CFR 1.114 (request for continued examination). See 37 CFR 1.313(c)(2).

Petitioner is advised that the issue fee paid on June 18, 2004 in the above-identified application cannot be refunded. If, however, the above-identified application is again allowed, petitioner may request that it be applied towards the issue fee required by the new Notice of Allowance.[1]

Telephone inquiries should be directed to the undersigned at (703) 305-8680.

This matter is being referred to Technology Center AU 2814 for processing of the request for continued examination under 37 CFR 1.114 and for consideration of the concurrently filed Information Disclosure Statement.

Frances Hicks
Petitions Examiner
Office of Petitions
Office of the Deputy Commissioner
for Patent Examination Policy

---

[1] The request to apply the issue fee to the new Notice may be satisfied by completing and returning the new Issue Fee Transmittal Form PTOL-85(b), which includes the following language thereon: "Commissioner for Patents is requested to apply the Issue Fee and Publication Fee (if any) or re-apply any previously paid issue fee to the application identified above." Petitioner is advised that, whether a fee is indicated as being due or not, the Issue Fee Transmittal Form **must** be completed and timely submitted to avoid abandonment. Note the language in bold text on the first page of the Notice of Allowance and Fee(s) Due (PTOL-85).

UNITED STATES PATENT AND TRADEMARK OFFICE

Commissioner for Patents
United States Patent and Trademark Office
P.O. Box 1450
Alexandria, VA 22313-1450
www.uspto.gov

KENYON & KENYON LLP
1500 K STREET N.W.
SUITE 700
WASHINGTON DC 20005

JUN 04 2007

In re Application of:
PALASIS, MARIA et al
Serial No. 10/388,468
Filed: Mar. 17, 2003
Docket: 12013/56602
Title: METHODS OF SEALING AN INJECTION SITE

DECISION ON PETITION UNDER 37 CFR § 1.181

This is a decision on the petition filed Dec. 7, 2006 under 37 CFR 1.181 requesting supervisory review of the final office action mailed Aug. 7, 2006.

The petition is **Dismissed as moot**.

The examiner was instructed to construe the petition as a request for reconsideration. In finding petitioner's points of argument persuasive, the requested relief is granted. In view of the examiner's action, decision on the petition is moot and is dismissed.

Any inquiry regarding this decision should be directed to Henry C. Yuen, Special Programs Examiner, at (571) 272-4856.

PETITION DISMISSED AS MOOT.

Karen M. Young

Frederick R. Schmidt, Director
Technology Center 3700

UNITED STATES PATENT AND TRADEMARK OFFICE

Commissioner for Patents
United States Patent and Trademark Office
P.O. Box 1450
Alexandria, VA 22313-1450
www.uspto.gov

RALPH A. DOWELL OF DOWELL & DOWELL P.C.
2111 EISENHOWER AVE., SUITE 406
ALEXANDRIA, VA 22314

COPY MAILED

APR 13 2005

OFFICE OF PETITIONS

In re Application of
Jean-Jacques Lacroix et al
Application No. 10/388,478
Filed: March 17, 2003
Attorney Docket No. 14293

ON PETITION

This is a decision on the petition, filed April 12, 2005, under 37 CFR 1.313(c)(2) to withdraw the above-identified application from issue after payment of the issue fee.

The petition is **GRANTED**.

The above-identified application is withdrawn from issue for consideration of a submission under 37 CFR 1.114 (request for continued examination). See 37 CFR 1.313(c)(2).

Petitioner is advised that the issue fee paid on September 23, 2004 in the above-identified application cannot be refunded. If, however, the above-identified application is again allowed, petitioner may request that it be applied towards the issue fee required by the new Notice of Allowance.[1]

Telephone inquiries should be directed to Irvin Dingle at (571) 272-3210.

This matter will be forwarded to Technology Center AU 3751 for processing of the request for continued examination under 37 CFR 1.114 and for consideration of the concurrently filed amendment.

Irvin Dingle
Petitions Examiner
Office of Petitions
Office of the Deputy Commissioner
for Patent Examination Policy

[1] The request to apply the issue fee to the new Notice may be satisfied by completing and returning the new Issue Fee Transmittal Form PTOL-85(b), which includes the following language thereon: Commissioner for Patents is requested to apply the Issue Fee and Publication Fee (if any) or re-apply any previously paid issue fee to the application identified above. Petitioner is advised that, whether a fee is indicated as being due or not, the Issue Fee Transmittal Form **must** be completed and timely submitted to avoid abandonment. Note the language in bold text on the first page of the Notice of Allowance and Fee(s) Due (PTOL-85).

UNITED STATES PATENT AND TRADEMARK OFFICE

COMMISSIONER FOR PATENTS
UNITED STATES PATENT AND TRADEMARK OFFICE
P.O. BOX 1450
ALEXANDRIA, VA 22313-1450
WWW.USPTO.GOV

Paper No. None

THE LAW OFFICES OF THOMAS L. ADAMS
120 EAGLE ROCK AVENUE
P.O. BOX 340
EAST HANOVER NJ 07936

COPY MAILED
SEP 22 2006
OFFICE OF PETITIONS

In re Application of	:	
Gregory G. Borsinger et al.	:	
Application No. 10/388,548	:	DECISION ON PETITION
Filed: March 17, 2003	:	UNDER 37 C.F.R. §1.137(f)
Attorney Docket No. BSN8	:	
Title: NOVEL WAX EMULSION	:	
COATING APPLICATIONS	:	

This is a decision on the petition filed on January 3, 2006, pursuant to 37 C.F.R. §1.137(f), to revive the above-identified application.

The Office regrets the period of delay in issuing this decision.

A grantable petition pursuant to 37 C.F.R. 1.137(f) must be accompanied by:

(1) Notification of the filing of an application in a foreign country or under a multinational treaty that requires 18 month publication[1];
(2) The petition fee as set forth in 37 C.F.R. § 1.17(m), and;
(3) A statement that the entire delay in filing the notice from the date that the notice was due under 35 U.S.C. §122(b)(2)(B)(iii) until the date the notice was filed was unintentional. The Commissioner may require additional information where there is a question whether the delay was unintentional.

1 See PTO/SB/36 and paragraph on PTO/SB/64a for further information. Both may be downloaded at http://www.uspto.gov/web/forms/index.html.

Petitioner states that the present nonprovisional application is the subject of an application filed in an international application on March 12, 2004. However, the United States Patent and Trademark Office was unintentionally not notified of this filing within 45 days subsequent to the filing of the subject application in an international application.

In view of the above, this application became abandoned pursuant to 35 U.S.C. §1.22(b)(2)(B)(iii) and 37 C.F.R. §1.213(c) for failure to timely notify the Office of the filing of an application under a multilateral international agreement that requires publication of applications 18 months after filing.

Receipt of the Notice of Rescission of Nonpublication Request with the present petition is acknowledged.

37 C.F.R. §1.137(f) requires a statement that the entire delay in filing the notice from the date that the notice was due under 35 U.S.C. §122(b)(2)(B)(iii) until the date the notice was filed was unintentional. Since the statement contained in the instant petition varies from the language required by 37 C.F.R. §1.137(f), the statement contained in the instant petition is being construed as the statement required by 37 C.F.R. §1.137(f) and petitioner must notify the Office if this is not a correct interpretation of the statement contained in the instant petition.

The petition under 37 C.F.R. §1.137(f) is **GRANTED**.

Petitioner has submitted the notification of an international filing, paid the petition fee, and has made a statement which is being construed as the proper statement of unintentional delay.

The present petition has been found to be in compliance with 37 C.F.R. §1.137(f). Accordingly, the failure to timely notify the Office of an international filing within 45 days after the date of filing of such international application as provided by 35 U.S.C. §122(b)(2)(B)(iii) and 37 C.F.R. §1.213(c) is accepted as having been unintentionally delayed.

The previous Request and Certification under 35 U.S.C. §122(b)(2)(B)(i), filed with the original application papers, has been rescinded. A Notice Regarding Rescission of Nonpublication Request which sets forth the projected publication date of December 28, 2006 accompanies this decision on petition.

Technology Center 1731 will be notified of this decision.

The general phone number for the Office of Petitions which should be used for status requests is (571) 272-3282. Telephone inquiries regarding *this decision* should be directed to the undersigned at (571) 272-3225.

Paul Shanoski
Senior Attorney
Office of Petitions
United States Patent and Trademark Office

Encl. Communication Regarding Rescission of Nonpublication Request and/or Notice of Foreign Filing

UNITED STATES PATENT AND TRADEMARK OFFICE

Commissioner for Patents
United States Patent and Trademark Office
P.O. Box 1450
Alexandria, VA 22313-1450
www.uspto.gov

SUGHRUE MION, PLLC
2100 PENNSYLVANIA AVENUE, N.W.
SUITE 800
WASHINGTON DC 20037

COPY MAILED

NOV 09 2007

OFFICE OF PETITIONS

In re Application of	:
Fernandez et al	:
Application No. 10/388,549	: ON PETITION
Filed: March 17, 2003	:
For: COUPLING FOR THE TEETH OF EXCAVATORS AND THE LIKE	:

This is a decision on the petition under 37 CFR 1.137(a) filed September 18, 2007, to revive the above-identified abandoned application.

The petition is **granted.**

The TWO MONTH period for filing applicant's Brief on Appeal, in reply to the Notice of Appeal filed October 16, 2007, commences with this mailing. Extensions of time under 37 CFR 1.136(a) are available.

This application became abandoned to timely file the Notice of Appeal on or before December 15, 2005 in reply to the final rejection of September 15, 2004. While a reply under 37 CFR 1.116 was filed December 6, 2004, this did not prima facie place the application in condition for allowance as indicated by the Advisory Action of December 15, 2005. A Notice of Abandonment has not been mailed. Indeed the abandonment went unheeded until recently. However, the examiner's actions could not have the force and effect of saving this application form its abandoned condition. See Lorenz v. Finkl, 333 F.2d 885, 891 142 USPQ 26, 30 (CCPA 1964). Nevertheless this decision ratifies the ensuing prosecution and restores this application to pending status. The USPTO regrets the delay in this matter.

This application is returned to pending status and is being referenced to the Technology Center. It is anticipated that the examiner will take some action in this application within the TWO MONTH period that will obviate the need for a Brief on Appeal or any extensions of time.

Telephone inquiries related to this communication should be directed to the undersigned at (571) 272-3217.

Brian Hearn
Petitions Examiner
Office of Petitions

UNITED STATES PATENT AND TRADEMARK OFFICE

COMMISSIONER FOR PATENTS
UNITED STATES PATENT AND TRADEMARK OFFICE
P.O. BOX 1450
ALEXANDRIA, VA 22313-1450
www.uspto.gov

MAIL

Paper No. 4

JAN 2 6 2004

DIRECTOR'S OFFICE
TECHNOLOGY CENTER 2600

IAN F. BURNS & ASSOCIATES
1575 DELUCCHI LANE, SUITE 222
RENO NV 89502

In re Application of
John CHISHOLM
Application No. 10/388,550
Filed: March 14, 2003
For: COMMUNICATION SYSTEM

DECISION ON PETITION
TO MAKE SPECIAL

This is a decision on the petition to make special filed December 12, 2003 under MPEP §708.02 (IV), applicant's age.

A petition to make special under MPEP §708.02, IV, must show that petitioner is 65 years of age, or more. Acceptable evidence includes a birth certificate, copy of a driver's license, or simply a statement by the applicant. No fee is required.

The petition includes a statement and a copy of a driver's license for John Chisholm, evidencing that he is over 65 years of age.

Accordingly, the petition is **GRANTED**.

The application will retain its special status throughout its entire prosecution, including any appeal to the Board of Patent Appeals and Interferences, subject only to diligent prosecution by the applicant.

The application is being forwarded to the examiner for expedited prosecution.

Kenneth A. Wieder
Special Program Examiner
Technology Center 2600
Communications
(703) 305-4710

UNITED STATES PATENT AND TRADEMARK OFFICE

Commissioner for Patents
United States Patent and Trademark Office
P.O. Box 1450
Alexandria, VA 22313-1450
www.uspto.gov

COPY MAILED

JUN 20 2008

OFFICE OF PETITIONS

MORRISON & FOERSTER LLP
755 PAGE MILL RD
PALO ALTO, CA 94304-1018

In re Application of	:	
Kevin Kawasaki	:	
Application No. 10/388,551	:	DECISION ON PETITION
Filed: March 13, 2003	:	TO WITHDRAW
Attorney Docket No. 54412-20002.00	:	FROM RECORD
	:	

This is a decision on the Request to Withdraw as attorney or agent of record under 37 C.F.R. § 1.36(b), filed November 20, 2007.

The request is **DISMISSED** as moot.

A review of the file record indicates that the power of attorney to Morrison & Foerster, LLP has been revoked by the assignee of the patent application on February 28, 2008. Accordingly, the request to withdraw under 37 C.F.R. § 1.36(b) is moot.

All future communications from the Office will continue to be directed to the below-listed address until otherwise notified by applicant.

Telephone inquires concerning this decision should be directed to undersigned at 571-272-1642.

April M. Wise
Petitions Examiner
Office of Petitions

cc: E. THOMAS WHEELOCK
PO BOX 61168
PALO ALTO, CA 94306

UNITED STATES PATENT AND TRADEMARK OFFICE

Commissioner for Patents
United States Patent and Trademark Office
P.O. Box 1450
Alexandria, VA 22313-1450
www.uspto.gov

LACKENBACH SIEGEL
One Chase Road
Scarsdale NY 10583

COPY MAILED

MAR 1 8 2005

OFFICE OF PETITIONS

In re Application of
Legrady, et al.
Application No. 10/388,570
Filed: March 14, 2003
Attorney Docket No. P-17-MG
For: COMPLIANT SURFACE MOUNT ELECTRICAL CONTACTS FOR CIRCUIT BOARDS AND METHOD OF MAKING AND USING SAME

ON PETITION

This is a decision on the petition under 37 CFR 1.137(a), filed July 22, 2004, to revive the above-identified application. In addition, the petition will be treated under 37 CFR 1.181 because petitioners request the withdrawal of the holding of abandonment.

The petition under 37 CFR 1.181 is **DISMISSED**.

The petition under 37 CFR 1.137(a) is **DISMISSED**.

Any further petition to revive the above-identified application must be submitted within TWO (2) MONTHS from the mail date of this decision. Extensions of time under 37 CFR 1.136(a) are permitted. The reconsideration request should include a cover letter entitled "Petition under 37 CFR 1.137." This is **not** final agency action within the meaning of 5 U.S.C. § 704.

This application became abandoned for failure to timely submit a completed PTOL- 85B (Part B-Fee(s) Transmittal), the issue fee, and the publication fee in response to the Notice of Allowance and Fee(s) Due, mailed February 10, 2004, which set a non-extendable three month period for reply. The application became abandoned on May 11, 2004. A Notice of Abandonment was mailed on July 8, 2004.

Petitioners request that the holding of abandonment be withdrawn for the reason that timely payment was not proffered due to misinformation received from a USPTO employee. Adrienne Shirley, Legal Assistant to an attorney of record, states that the required issuance related fees were properly docketed into her firm's system and that after she couldn't find the original

correspondence from the USPTO, she called her supervising attorney at home, who instructed her to pay the issue fee due for the above-identified application. She prepared appropriate correspondence for mailing. On May 10, 2004, Ms. Shirley called the patent office and allegedly received inaccurate information from a USPTO employee in Publications Division. This unnamed employee allegedly told Ms. Shirley that no fee was due.

As a result of this conversation, Ms. Shirley chose not to pay the issue fee and publication fee.

The holding of abandonment cannot be withdrawn because petitioners admit that they did not timely pay the issue fee and publication fee. The application was abandoned due to a conscious decision on Ms. Shirley's part not to pay the fees. The situation presented does not fall into the two broad categories that, if properly supported, may result in the withdrawal of the holding of abandonment. These two generic categories are situations in which (1) the applicant proves that he failed to receive an Office action or (2) the applicant proves that a timely and proper response to an Office action was mailed/filed.

In this case, the February 10, 2004 Notice of Allowance and Fee(s) Due was received at the correspondence address of record, and the requirement to pay the issue fee and publication fee was entered into the firm's docketing system and, as stated above, Ms. Shirley admits that the fees were **not** timely paid.

The petition under 37 CFR 1.181 to withdraw the holding of abandonment is **dismissed**.

A grantable petition to revive an abandoned application under 37 CFR 1.137(a) must be accompanied by (1) the required reply, unless previously filed. In a nonprovisional application abandoned for failure to prosecute, the required reply may be met by the filing of a continuing application. In an application or patent, abandoned or lapsed for failure to pay the issue fee or any portion thereof, the required reply must be the payment of the issue fee or any outstanding balance thereof; (2) the petition fee as set forth in § 1.17(l); (3) a showing to the satisfaction of the Commissioner that the entire delay in filing the required reply from the due date for the reply until the filing of a grantable petition pursuant to this paragraph was unavoidable; and (4) any terminal disclaimer (and fee as set forth in § 1.20 (d)) required pursuant to paragraph (c) of this section.

This petition does not satisfy requirements (1) and (3).

Regarding (1), petitioner has not submitted a completed PTOL-85B (Part B- Fee(s) Transmittal). As stated on the Notice of Allowance and Fee(s) Due, " The PTOL- 85B (or its equivalent) must be returned within this period even if no fee is due or the application will be regarded as abandoned."

Regarding (3), the showing of record is inadequate to establish unavoidable delay within the meaning of 37 CFR 1.137(a). Specifically, an application is "unavoidably" abandoned only where petitioner, or counsel for petitioner, takes all action necessary for a proper response to the outstanding Office action, but through the intervention of unforeseen circumstances, such as failure of mail, telegraph, telefacsimile, or the negligence of otherwise reliable employees, the response is not timely received in the Office. Ex parte Pratt, 1887 Dec. Comm'r Pat. 31 (Comm'r Pat. 1887).

The Commissioner may revive an abandoned application if the delay in responding to the relevant outstanding Office requirement is shown to the satisfaction of the Commissioner to have been "unavoidable". 35 U.S.C. § 133. Decisions on reviving abandoned applications have adopted the reasonably prudent person standard in determining if the delay was unavoidable. Ex parte Pratt, 1887 Dec. Comm'r Pat. 31, 32-33 (Comm'r Pat. 1887)(the term 'unavoidable' "is applicable to ordinary human affairs, and requires no more or greater care or diligence than is generally used and observed by prudent and careful men in relation to their most important business"); In re Mattullath, 38 App. D.C. 497, 514-15 (D.C. Cir. 1912); Ex parte Henrich, 1913 Dec. Comm'r Pat. 139, 141 (Comm'r Pat. 1913). In addition, decisions on revival are made on a "case-by-case basis, taking all the facts and circumstances into account." Smith v. Mossinghoff, 671 F.2d 533, 538, 213 USPQ 977, 982 (D.C. Cir. 1982). Finally, a petition to revive an application as unavoidably abandoned cannot be granted where a petitioner has failed to meet his or her burden of establishing the cause of the unavoidable delay. Haines v. Quigg, 673 F. Supp. 314, 5 USPQ2d 1130 (N.D. Ind. 1987).

Petitioners assert that payment of the issue fee and publication fee was unavoidably delayed because Ms. Shirley followed erroneous oral advice from a USPTO employee who allegedly stated that the issue fee could not be due.

Petitioners are reminded that official communication with the Office must be carried out in writing. 37 CFR 1.2. Oral advice from Office employees is not binding. See In re Sivertz, 227 USPQ 255,256 (Comm'r Pat. 1985). The unnamed USPTO employee's alleged statements made during a telephone call on May 10, 2004 as reported in Adrienne Shirley's July 22, 2004 declaration cannot nullify the February 10, 2004 Notice of Allowance and Fee(s) Due, which required timely submission of the PTOL-85B (Part B- Fee(s) Transmittal), payment of the issue fee, and payment publication fee to avoid abandonment of the application. The Office never retracted the February 10, 2004 Notice of Allowance and Fee(s) Due.

The petition under 37 CFR 1.137(a) is **dismissed**.

ALTERNATIVE VENUE

Petitioners should consider filing a petition stating that the delay was unintentional. Public Law 97-247, § 3, 96 Stat. 317 (1982), which revised patent and trademark fees, amended 35 U.S.C. § 41(a)(7) to provide for the revival of an "unintentionally" abandoned application without a showing that the delay in prosecution or in late payment of an issue fee was "unavoidable." This amendment to 35 U.S.C. § 41(a)(7) has been implemented in 37 CFR 1.137(b). An "unintentional" petition under 37 CFR 1.137(b) must be accompanied by the $ 750.00 petition fee.

The filing of a petition under 37 CFR 1.137(b) cannot be intentionally delayed and therefore must be filed promptly. A person seeking revival due to unintentional delay can not make a statement that the delay was unintentional unless the entire delay, including the delay from the date it was discovered that the application was abandoned until the filing of the petition to revive under 37 CFR 1.137(b), was unintentional. A statement that the delay was unintentional is not appropriate if petitioner intentionally delayed the filing of a petition for revival under 37 CFR 1.137(b). For petitioner's convenience, a blank copy of PTO/SB/64 -- Petition for Revival of an Application for Patent Abandoned Unintentionally under 37 CFR 1.137(b) is enclosed.

Further correspondence with respect to this matter should be addressed as follows:

By mail: Mail Stop PETITION
Commissioner for Patents
Post Office Box 1450
Alexandria, VA 22313-1450

By hand: U.S. Patent and Trademark Office
Customer Service Window, Mail Stop Petition
Randolph Building
401 Dulany Street
Alexandria, VA 22314

By FAX: (703) 872-9306 – ATTN: Office of Petitions

Telephone inquiries pertaining to this matter may be directed to the undersigned at (571) 272-3230.

E. Shirene Willis

E. Shirene Willis
Senior Petitions Attorney
Office of Petitions

enclosures: blank PTO/SB/64 -- Petition for Revival of an Application Abandoned Unintentionally under 37 CFR 1.137(b)

Privacy Act Statement

UNITED STATES PATENT AND TRADEMARK OFFICE

Commissioner for Patents
United States Patent and Trademark Office
P.O. Box 1450
Alexandria, VA 22313-1450
www.uspto.gov

LACKENBACH SIEGEL
One Chase Road
Scarsdale NY 10583

COPY MAILED

AUG 2 2 2005

OFFICE OF PETITIONS

In re Application of
Legrady, et al.
Application No. 10/388,570
Filed: March 14, 2003
Attorney Docket No. P-17-MG
For: COMPLIANT SURFACE MOUNT ELECTRICAL CONTACTS FOR CIRCUIT BOARDS AND METHOD OF MAKING AND USING SAME

ON PETITION

This is a decision on the petition under 37 CFR 1.137(b), filed July 21, 2005 (express mail date July 20, 2005), to revive the above-identified application.

The petition under 37 CFR 1.137(b) is **DISMISSED**.

Any further petition to revive the above-identified application must be submitted within TWO (2) MONTHS from the mail date of this decision. Extensions of time under 37 CFR 1.136(a) are permitted. The reconsideration request should include a cover letter entitled "Petition under 37 CFR 1.137(b)." This is **not** final agency action within the meaning of 5 U.S.C. § 704.

This application became abandoned for failure to timely submit a completed PTOL- 85 (Part B-Fee(s) Transmittal), the issue fee, and the publication fee in response to the Notice of Allowance and Fee(s) Due, mailed February 10, 2004, which set a non-extendable three month period for reply. The application became abandoned on May 11, 2004. A Notice of Abandonment was mailed on July 8, 2004.

A petition under 37 CFR 1.137(a), filed July 22, 2004, to revive the above-identified application was dismissed on March 18, 2005 for failure to submit a completed PTOL-85 and failure to show the entire delay in replying to the February 10, 2004 Notice was unavoidable.

A grantable petition under 37 CFR 1.137(b) must be accompanied by: (1) the required reply, unless previously filed; (2) the petition fee as set forth in 37 CFR 1.17(m); (3) a statement that the entire delay in filing the required reply from the due date for the reply until the filing of a grantable

petition pursuant to 37 CFR 1.137(b) was unintentional; and (4) any terminal disclaimer (and fee as set forth in 37 CFR 1.20(d)) if required pursuant to 37 CFR 1.137(c).

This petition lacks item (1). Petitioners have not submitted a **signed** PTOL-85 (Part B- Fee(s) Transmittal). The PTOL-85 submitted on July 22, 2004 is dated May 10, 2004 and the authorized signature is missing. It appears that a signature was once present, but was whited out/removed. Petitioners must submit a signed and completed PTOL-85.

Regarding finances, petitioners paid a second publication fee and issue fee with the present petition. These fees were previously paid with the July 22, 2004 petition. Therefore, deposit account no. 10-0100 will be credited the $700.00 issue fee and the $300.00 publication fee submitted with the present petition.

Further correspondence with respect to this matter should be addressed as follows:

By mail: Mail Stop PETITION
Commissioner for Patents
Post Office Box 1450
Alexandria, VA 22313-1450

By hand: U.S. Patent and Trademark Office
Customer Service Window, Mail Stop Petition
Randolph Building
401 Dulany Street
Alexandria, VA 22314

By FAX: (571) 273-8300 - ATTN: Office of Petitions

Telephone inquiries pertaining to this matter may be directed to the undersigned at (571) 272-3230.

E. Shirene Willis

E. Shirene Willis
Senior Petitions Attorney
Office of Petitions

UNITED STATES PATENT AND TRADEMARK OFFICE

Commissioner for Patents
United States Patent and Trademark Office
P.O. Box 1450
Alexandria, VA 22313-1450
www.uspto.gov

LACKENBACH SIEGEL
One Chase Road
Scarsdale NY 10583

COPY MAILED

NOV 1 6 2005

OFFICE OF PETITIONS

ON PETITION

In re Application of
Legrady, et al.
Application No. 10/388,570
Filed: March 14, 2003
Attorney Docket No. P-17-MG
For: COMPLIANT SURFACE MOUNT ELECTRICAL CONTACTS FOR CIRCUIT BOARDS AND METHOD OF MAKING AND USING SAME

This is a decision on the reconsideration petition under 37 CFR 1.137(b), filed October 31, 2005 (certificate of mailing date October 24, 2005), to revive the above-identified application.

The petition under 37 CFR 1.137(b) is **GRANTED**.

This application became abandoned for failure to timely submit a completed PTOL- 85 (Part B-Fee(s) Transmittal), the issue fee, and the publication fee in response to the Notice of Allowance and Fee(s) Due, mailed February 10, 2004, which set a non-extendable three month period for reply. The application became abandoned on May 11, 2004. A Notice of Abandonment was mailed on July 8, 2004.

A petition under 37 CFR 1.137(a), filed July 22, 2004, to revive the above-identified application was dismissed on March 18, 2005 for failure to submit a completed PTOL-85 and failure to show the entire delay in replying to the February 10, 2004 Notice was unavoidable.

A petition under 37 CFR 1.137(b), filed July 21, 2005 (express mail date July 20, 2005), was dismissed on August 22, 2004 for failure to submit a completed PTOL-85.

Petitioners have submitted a proper reply a signed and dated Part B - Fee(s) Transmittal Form, the issue fee, and the publication fee -, an acceptable statement of the unintentional nature of the delay in timely responding to the February 10, 2004 Notice of Allowance and Fee(s) Due, and the required petition and petition fee. Accordingly, the petition under 37 CFR 1.137(b) is granted.

Regarding finances, petitioners paid the issue fee and publication fee on mailroom date July 22, 2004. Petitioners have once again been charged a $700.00 issue fee and a $300.00 publication fee. These fees are unnecessary and will be credited to deposit account no. 10-0100.

After the mailing of this decision, the application file will be forwarded to Publications Division for processing into a patent.

Telephone inquiries pertaining to this matter may be directed to the undersigned at (571) 272-3230.

E. Shirene Willis

E. Shirene Willis
Senior Petitions Attorney
Office of Petitions

UNITED STATES PATENT AND TRADEMARK OFFICE

Commissioner for Patents
United States Patent and Trademark Office
P.O. Box 1450
Alexandria, VA 22313-1450
www.uspto.gov

GERON CORPORATION
230 CONSTITUTION DRIVE
MENLO PARK CA 94025

COPY MAILED

SEP 10 2007

OFFICE OF PETITIONS

In re Application of
Stanton et al.
Application No. 10/388,578
Filed: 03/13/2003
Attorney Docket No. 135/001

ON PETITION

This is a decision on the petition under the unintentional provisions of 37 CFR 1.137(b), filed March 29, 2007, to revive the above-identified application.

The petition is **GRANTED**.

The application became abandoned for failure to timely file a reply within the meaning of 37 CFR 1.113 to the final Office action of August 24, 2006. The proposed reply required for consideration of a petition to revive must be a Notice of Appeal (and appeal fee required by 37 CFR 41.20(b)(2), an amendment that *prima facie* places the application in condition for allowance, a Request for Continued Examination and submission (37 CFR 1.114), or the filing of a continuing application under 37 CFR 1.53(b). See MPEP 711.03(c)(III)(A)(2). Petitioner obtained an extension of time for response within the third month. Accordingly, the application became abandoned on February 25, 2007. A Notice of Abandonment was mailed on March 21, 2007.

The petition satisfies the requirements of 37 CFR 1.137(b) in that petitioner has supplied (1) the reply in the form of a Request for Continued Examination (RCE), the RCE fee and the submission required by 37 CFR 1.114; (2) the petition fee; and (3) a proper statement of unintentional delay.

Telephone inquiries concerning this decision should be directed to the undersigned at (571) 272-3211.

This application is being referred to Technology Center AU 1632 for processing of the RCE and for appropriate action by the Examiner in the normal course of business on the amendment submitted in accordance with 37 CFR 1.114.

C. T. Donnell

Christina Tartera Donnell
Senior Petitions Attorney
Office of Petitions

UNITED STATES PATENT AND TRADEMARK OFFICE

Commissioner for Patents
United States Patent and Trademark Office
P.O. Box 1450
Alexandria, VA 22313-1450
www.uspto.gov

WESTERMAN HATTORI DANIELS & ADRIAN, LLP
1250 CONNECTICUT AVENUE, NW
SUITE 700
WASHINGTON, DC 20036

COPY MAILED

MAY 25 2006

OFFICE OF PETITIONS

ON PETITION

In re Application of :
Takashi Ando et al :
Application No. 10/388,596 :
Filed: March 17, 2003 :
Attorney Docket No. 030320

This is a decision on the petition filed, May 19, 2006 under 37 CFR 1.313(c)(2) to withdraw the above-identified application from issue after payment of the issue fee.

The petition is **GRANTED**.

The above-identified application is withdrawn from issue for consideration of a submission under 37 CFR 1.114 (request for continued examination). See 37 CFR 1.313(c)(2).

Petitioner is advised that the issue fee paid on April 19, 2006 in the above-identified application cannot be refunded. If, however, the above-identified application is again allowed, petitioner may request that it be applied towards the issue fee required by the new Notice of Allowance.[1]

Telephone inquiries should be directed to Irvin Dingle at (571) 272-3210.

This matter is being referred to Technology Center AU 2811 for processing of the request for continued examination under 37 CFR 1.114 and for consideration of the concurrently filed Information Disclosure Statement.

Irvin Dingle
Petitions Examiner
Office of Petitions

---

[1] The request to apply the issue fee to the new Notice may be satisfied by completing and returning the new Issue Fee Transmittal Form PTOL-85(b), which includes the following language thereon: Commissioner for Patents is requested to apply the Issue Fee and Publication Fee (if any) or re-apply any previously paid issue fee to the application identified above. Petitioner is advised that, whether a fee is indicated as being due or not, the Issue Fee Transmittal Form **must** be completed and timely submitted to avoid abandonment. Note the language in bold text on the first page of the Notice of Allowance and Fee(s) Due (PTOL-85).

UNITED STATES PATENT AND TRADEMARK OFFICE

Commissioner for Patents
United States Patent and Trademark Office
P.O. Box 1450
Alexandria, VA 22313-1450
www.uspto.gov

McDERMOTT WILL & EMERY
600 13TH STREET NW
WASHINGTON, DC 20005-3096

COPY MAILED

JAN 10 2006

OFFICE OF PETITIONS

In re Application of	:	
Kazuma Kan et al	:	
Application No. 10/388,612	:	DECISION GRANTING PETITION
Filed: March 17, 2003	:	UNDER 37 CFR 1.313(c)(2)
Attorney Docket No. 50099-222	:	

This is a decision on the petition, filed January 4, 2006, under 37 CFR 1.313(c)(2) to withdraw the above-identified application from issue after payment of the issue fee.

The petition is **GRANTED**.

The above-identified application is withdrawn from issue for consideration of a submission under 37 CFR 1.114 (request for continued examination). See 37 CFR 1.313(c)(2).

Petitioner is advised that the issue fee paid on October 31, 2005 in the above-identified application cannot be refunded. If, however, the above-identified application is again allowed, petitioner may request that it be applied towards the issue fee required by the new Notice of Allowance.[1]

Telephone inquiries should be directed to the undersigned at (571) 272-3218.

This matter is being referred to Technology Center AU 2861 for processing of the request for continued examination under 37 CFR 1.114 and for consideration of the Information Disclosure Statement.

Frances Hicks
Frances Hicks
Petitions Examiner
Office of Petitions

---

[1] *The request to apply the issue fee to the new Notice may be satisfied by completing and returning the new Issue Fee Transmittal Form PTOL-85(b) (along with any balance due at the time of payment), which includes the following language thereon: "Commissioner for Patents is requested to apply the Issue Fee and Publication Fee (if any) or re-apply any previously paid issue fee to the application identified above." Petitioner is advised that, whether a fee is indicated as being due or not, the Issue Fee Transmittal Form* **must** *be completed and timely submitted to avoid abandonment. Note the language in bold text on the first page of the Notice of Allowance and Fee(s) Due (PTOL-85).*

UNITED STATES PATENT AND TRADEMARK OFFICE

COMMISSIONER FOR PATENTS
UNITED STATES PATENT AND TRADEMARK OFFICE
P.O. BOX 1450
ALEXANDRIA, VA 22313-1450
www.uspto.gov

KUDIRKA & JOBSE, LLP
ONE STATE STREET
SUITE 800
BOSTON MA 02109

COPY MAILED

AUG 1 1 2005

OFFICE OF PETITIONS

Applicant: Bourgeois Application No. 10/388,616 Filed: March 13, 2003 Pub. No.: US 2004/0076779 A1 Pub. Date: April 22, 2004 For: DELAMINATION-RESISTANT MULTILAYER CONTAINER, PREFORM AND METHOD OF MANUFACTURE	: Decision on Petition	

This is a response to the applicants' petition titled "Petition to Rescind Publication of Patent Application," received on June 22, 2004, which requests rescission of the publication of the above-identified application, which published on April 22, 2004. Applicants in effect, request that the above-identified application be treated as an application that has **not** been published pursuant to 35 U.S.C. § 122(b) on April 22, 2004.

The petition is dismissed.

Petitioner requests that the Office rescind the publication of the present application because it was published in error. Petitioner argues that the application was filed with a nonpublication request and that he did not make a claim for foreign priority. Petitioner states that a request for a Corrected Filing Receipt was made on September 2, 2003, which requested the Office to delete the foreign priority claim and to acknowledge the nonpublication request. A request to rescind the nonpublication request was submitted concurrently with this petition.

The Office published the above-identified application on April 22, 2004, based on the filing date of foreign application PL P-356730 filed October 18, 2002, because the Office mistakenly entered this information as priority data. The application included a nonpublication request submitted on filing, however, the Office did not process it. Since the application included a proper nonpublication request and the application did not include a benefit claim to the foreign application, the above-identified application should not have been published until after the Office received the request to rescind the nonpublication request. Therefore, the Office published the above-identified application on April 22, 2004 in error.

The request for a Corrected Filing Receipt referred to in the petition could not be found in the Office records.

The benefit claim to the related application has been removed from the Office records. Since the rescission of the nonpublication request was filed on June 22, 2004, the petition is dismissed and the publication will not be taken down from the Office website and republished.

Telephone inquiries specific to this decision should be directed to Mark Polutta at (571) 272-7709.

Robert W. Bahr
Senior Patent Attorney
Office of the Deputy Commissioner
for Patent Examination Policy

Enclosure: Corrected Filing Receipt

UNITED STATES PATENT AND TRADEMARK OFFICE

Commissioner for Patents
United States Patent and Trademark Office
P.O. Box 1450
Alexandria, VA 22313-1450
www.uspto.gov

MAILED

FEB 22 2007

Technology Center 2100

Daniel Stanger
Mattingly, Stanger, Malur & Brundidge, P.C.
1900 Diagonal Rd., Suite 370
Alexandria, VA 22314

In re Application of:
Hitoshi Kakuta, et al.
Application No. 10/388,634
Filed: March 17, 2003
For: Disk Array System and its Control Method

DECISION ON PETITION UNDER 37 C.F.R. § 1.181

This is a decision on the petition filed November 10, 2005 under 37 CFR § 1.181 to invoke Supervisory Authority of the Commissioner and require the Examiner to withdraw the Final rejection mailed November 2, 2005.

The petition is **DISMISSED AS MOOT**.

On November 10, 2005, applicant's counsel filed a petition to the Director under 37 CFR § 1.181 to seek relief from actions of the examiner in relation to the Final Office action mailed November 2, 2005. In the petition, applicant's counsel alleged that the rejection of claims 17-28 under 35 U.S.C. § 102 over Jacobson was introduced for the very first time on unamended claims and Jacobson was additionally not cited on a IDS with a certificate and fee; thus rendering the Final Office action premature.

On 23 February 2006, an office action was mailed out indicating that the finality of the November 2, 2005 action is withdrawn.

Accordingly, the petition is **DISMISSED AS MOOT.**

Any inquiry concerning this decision should be directed to the undersigned whose telephone number is (571) 272-3612.

Tod Swann
Workgroup Quality Assurance Specialist
Technology Center 2100
Computer Architecture, Software, and
Information Security

UNITED STATES PATENT AND TRADEMARK OFFICE

COMMISSIONER FOR PATENTS
UNITED STATES PATENT AND TRADEMARK OFFICE
P.O. BOX 1450
ALEXANDRIA, VA 22313-1450
WWW.USPTO.GOV

Paper No. 3

BACON & THOMAS
625 SLATERS LANE
FOURTH FLOOR
ALEXANDRIA, VA 22314

COPY MAILED

JUN 2 3 2003

OFFICE OF PETITIONS

In re Application of	:	
Chan-Tung Chen	:	
Application No. 10/388,644	:	NOTICE
Filed: March 17, 2003	:	
Attorney Docket No. CHEN3502/EM/CCC	:	

This is a notice regarding your request for acceptance of a fee deficiency submission under 37 CFR 1.28. On September 1, 1998, the Court of Appeals for the Federal Circuit held that 37 CFR 1.28(c) is the sole provision governing the time for correction of the erroneous payment of the issue fee as a small entity. **See DH Technology v. Synergystex International, Inc. 154 F.3d 1333, 47 USPQ2d 1865 (Fed. Cir. Sept. 1, 1998).**

The Office no longer investigates or rejects original or reissue applications under 37 CFR 1.56. **1098 Off. Gaz. Pat. Office 502 (January 3, 1989)**. Therefore, nothing in this Notice is intended to imply that an investigation was done.

Your fee deficiency submission under 37 CFR 1.28 is hereby **ACCEPTED**.

Inquiries related to this communication should be directed to the Office of Petitions Staff at (703) 305-9285.

This file is being forwarded to Technology Center AU 3711.

Wan Layman
Petitions Examiner
Office of Petitions
Office of the Deputy Commissioner
for Patent Examination Policy

UNITED STATES PATENT AND TRADEMARK OFFICE

COMMISSIONER FOR PATENT
UNITED STATES PATENT AND TRADEMARK OFFIC
WASHINGTON, D.C. 20231
www.uspto.go

Paper No. 4

Shugrue Mion, PLLC
2100 Pennsylvania Avenue, N.W.
Washington, DC 20037

MAILED

AUG 0 9 2003

Technology Center 2100

In re Application of: Donald J. Vella et al.)
Application No. 10/388,654) **DECISION ON PETITION TO MAKE**
Filed: March 17, 2003) **SPECIAL UNDER 37 C.F.R. §1.102**
For: CELLULAR MESSAGING ALERT METHOD AND SYSTEM) **AND M.P.E.P. §708.02(XI)**

This is a decision on the petition to make special filed July 3, 2002 under 37 C.F.R. §102(d) and M.P.E.P. §708.02(XI): Inventions For Countering Terrorism.

The petition is **DISMISSED**.

M.P.E.P. §708.02 (XI), which sets out the prerequisites for a grantable petition for Inventions For Countering Terrorism under 37 C.F.R. § 1.102(d), states in relevant part:

> International terrorism as defined in 18 U.S.C. 2331 includes "activities that - (A) involve violent acts or acts dangerous to human life that are a violation of the criminal laws of the United States or of any State, or that would be a criminal violation if committed within the jurisdiction of the United States or of any State; [and] (B) appear to be intended - (I) to intimidate or coerce a civilian population; (ii) to influence the policy of a government by intimidation or coercion; or (iii) to affect the conduct of a government by assassination or kidnapping..." The types of technology for countering terrorism could include, but are not limited to, systems for detecting/identifying explosives, aircraft sensors/security systems, and vehicular barricades/disabling systems.
>
> Applicants who desire that an application relating to inventions for countering terrorism be made special should file a petition with the petition fee under 37 CFR 1.17(h) requesting the Patent and Trademark Office to make the application special. The petition for special status should be accompanied by a statement explaining how the invention contributes to countering terrorism.

Petitioner's submission fails to meet the criteria set out with respect to countering terrorism in M.P.E.P. §708.02(XI). The claimed invention is generally directed to a system for providing alerts by distributing data to the relevant geographic area. Note, that there is no mention of terrorist activity in the claims which are directed to targeted message distribution in general. Dissemination of alert information does not directly prevent "violent acts or acts dangerous to human life that are a violation of the criminal laws of the United States or of any State" or activities "that would be a criminal violation if committed within the jurisdiction of the United States or of any State".

Furthermore, although the system may be employed to make one more aware of an occurrence of terrorist activity, alert dissemination does not directly prevent acts that appear to be intended to intimidate or coerce a civilian population, influence the policy of a government by intimidation or coercion, or affect the conduct of a government by assassination or kidnapping.

As a result, no advancement in the technology of countering terrorism has been persuasively shown.

Accordingly, the petition is **DISMISSED**. The application file is being forwarded to Central Files to await examination in its proper turn based on its effective filing date.

Any request for reconsideration must be filed within TWO MONTHS of the mailing date of this decision.

It is suggested that Applicant review M.P.E.P. §708.02 regarding other grounds available for filing a petition to make special. In particular, note M.P.E.P. §708.02(VIII): Accelerated Examination, which does not place limitations on the subject matter of the application.

Pinchus M. Laufer
Special Programs Examiner
Technology Center 2100
Computer Architecture, Software, and Information Security
(703) 306-4160

UNITED STATES PATENT AND TRADEMARK OFFICE

COMMISSIONER FOR PATENTS
UNITED STATES PATENT AND TRADEMARK OFFICE
P.O. BOX 1450
ALEXANDRIA, VA 22313-1450
www.uspto.gov

MAILED

JAN 13 2004

Technology Center 2100

Paper No. 8

Shugrue Mion, PLLC
2100 Pennsylvania Avenue, N.W.
Washington, DC 20037

In re Application of: Donald J. Vella et al.
Application No. 10/388,654
Filed: March 17, 2003
For: CELLULAR MESSAGING ALERT METHOD AND SYSTEM

DECISION ON PETITION TO MAKE SPECIAL UNDER 37 C.F.R. §1.102 AND M.P.E.P. §708.02(XI)

This is a decision on the request for reconsideration, filed August 29, 2003 of the decision mailed August 9, 2003 denying the grant of special status under 37 C.F.R. §102(d) and M.P.E.P. §708.02(XI): Inventions For Countering Terrorism.

The Petition is **DENIED**.

The original decision found Applicant's application ineligible for special status under this section on the grounds that the claimed invention is generally directed to a system for providing alerts by distributing data to the relevant geographic area and therefore does not directly prevent "violent acts or acts dangerous to human life that are a violation of the criminal laws of the United States or of any State" or activities "that would be a criminal violation if committed within the jurisdiction of the United States or of any State".

The request for reconsideration contends that the decision is (I) based upon "an unworkably narrow interpretation of the statutory language" and (II) based on an erroneous holding, because various public officials have recognized the importance of timely dissemination of information.

OPINION

I. The Decision uses an Appropriate Standard

Petitioner contends that the decision is based on " an unworkably narrow interpretation of the statutory language". This is not persuasive.

As a preliminary matter what is being interpreted to support the decision is 37 C.F.R. 1.102(d) with the guidance provided by the MPEP in §708.02(XI). This section of the MPEP provides guidance as to which applications may be appropriate for consideration for special status based on

contributions to the technologies for countering terrorism and advises Applicants as to the nature and content of the petition filed.

According to statute 35 U.S.C. §2(b)(2)(A) empowers the Office to "establish regulations, not inconsistent with law, which shall govern the conduct of proceedings in the Office". 37 CFR § 1.102 is a regulation, implemented under the authority of 35 U.S.C. §2(b)(2)(A), which provides for advancement of examination of specified cases out of the ordinary order of examination for enumerated purposes related to public policy and fairness (e.g., age/health).

Structure of 37 C.F.R. § 1.102

Section (a) of the rule establishes that applications will not be advanced out of turn except in the circumstances provided for in sections (b)-(d). Sections (b) provides for the head of a Government department ***to request*** immediate action in the instance where an invention is of "peculiar importance to some branch of the public service" Section (c) provides for special status on petition ***without a fee*** in situations which the Office has determined as a policy matter are deserving of expedited processing. Finally, section (d) allows for petition with a fee for grounds other than those specifically addressed in the rule. Note that section (a) establishes that petitions, be they under section c or d, must make a showing, which in the opinion of the Director, justifies advancement of examination for the application.

MPEP 708.02 describes the various situations which have been recognized by the Office as acceptable grounds for granting of petitions to make special and provides some guidance as to the showing required in each category. The list is an evolving one which provides for example, for special status based upon actual infringement, inventions related to recombinant DNA, superconductivity, and HIV/AIDS or cancer. Inventions related to countering terrorism and relating to biotechnology filed by small entities are the latest additions (circa July 1997) to the list.

MPEP 708.02 (XI) is directed to inventions for countering terrorism. It describes what types of activities are meant by terrorism and indicates that the types of technology involved will not be strictly limited.

II. The Decision correctly Concludes that Applicant's Invention Does not Meet the Standard

Applicant's specification and claims as originally filed are directed to a communications system. There is no mention of terrorism in the original disclosure. The only hint of such an application is in paragraphs 19 and 20 which state that another aspect of the invention is to provide an easy-to-use tool for Law Enforcement, Emergency Management or Homeland Security to alert the public in various geographic areas. Thus, we find, as a factual matter, that the application is directed to communications technology.

Further, the nexus between the communications technology and the proposed application to countering terrorism put forward by applicant at the time of the petition is no greater than in many

other applications routinely filed within this area for which special status has not been granted.

Petitioner seeks to rely on various public statements to support the petition. The petition ascribes to Department of Homeland Security Secretary Tom Ridge the position that US citizens have an important role to play in combating terrorism, quotes Attorney General John Ashcroft to the effect that the cooperation of US citizens has "been instrumental in preventing major terrorist attacks", and quotes Secretary Ridge's statement that ***protect[ing]*** the means by which we provide timely information to the public during emergency situations is a priority.

The undersigned notes that none of these statements deal with developing new methods of information dissemination.

Finally, the petitioner cites a panel of the Partnership for Public Warning which urges DHS to update the emergency alert system. The Partnership is public/private partnership group open to all comers whose stated mission is to promote and enhance efficient, effective, and integrated dissemination of public warnings and related information so as to save lives, reduce disaster losses and speed recovery. The fact that a group interested in promoting a particular technology finds it important once again has no bearing on the issue of whether a specific invention directed to a communications system prevents terrorism.

Applicant attempts to overcome the already noted deficiency by adding claims where the data transmitted through the system is information related to locations of terrorist activity or actual information as to the individuals associated with terrorist activity. The added claims specifying new terrorist issues which were not in the specification as originally filed can not be used to achieve special status.

Accordingly, we find that there is not adequate connection to countering terrorism to warrant granting of special status.

The Petition is **DENIED**.

The application file is being forwarded to Central Files to await examination in its proper turn based on its effective filing date.

Margaret A. Focarino

Margaret A. Focarino, Group Director
Technology Center 2100
Computer Architecture, Software, and Information Security

BASIS OF OPINION

35 U.S.C. 2 Powers and duties.

(a) IN GENERAL.— The United States Patent and Trademark Office, subject to the policy direction of the Secretary of Commerce—

(1) shall be responsible for the granting and issuing of patents and the registration of trademarks; and

(2) shall be responsible for disseminating to the public information with respect to patents and trademarks.

(b) SPECIFIC POWERS.— The Office—

(1) shall adopt and use a seal of the Office, which shall be judicially noticed and with which letters patent, certificates of trademark registrations, and papers issued by the Office shall be authenticated;

(2) may establish regulations, not inconsistent with law, which—
(A) shall govern the conduct of proceedings in the Office;

M.P.E.P. § 708.02 Petition To Make Special

37 C.F.R § 1.102 Advancement of examination.

(a) Applications will not be advanced out of turn for examination or for further action except as provided by this part, or upon order of the Commissioner to expedite the business of the Office, or upon filing of a request under paragraph (b) of this section or upon filing a petition under paragraphs (c) or (d) of this section ***with a showing which, in the opinion of the Commissioner, will justify so advancing it.***

(b) Applications wherein the inventions are deemed of peculiar importance to some branch of the public service and the head of some department of the Government requests immediate action for that reason, may be advanced for examination.

(c) A petition to make an application special may be filed without a fee if

the basis for the petition is the applicant's age or health or that the invention will materially enhance the quality of the environment or materially contribute to the development or conservation of energy resources.

(d) A petition to make an application special on grounds other than those referred to in paragraph (c) of this section must be accompanied by the fee set forth in § 1.17(h).

New applications ordinarily are taken up for examination in the order of their effective United States filing dates. Certain exceptions are made by way of petitions to make special, which ***may be granted*** under the conditions set forth below.

...

XI. INVENTIONS FOR COUNTERING TERRORISM

In view of the importance of developing technologies for countering terrorism and the desirability of prompt disclosure of advances made in these fields, the U.S. Patent and Trademark Office will accord "special" status to patent applications relating to counter-terrorism inventions.

International terrorism as defined in 18 U.S.C. 2331 includes "activities that - (A) involve violent acts or acts dangerous to human life that are a violation of the criminal laws of the United States or of any State, or that would be a criminal violation if committed within the jurisdiction of the United States or of any State; [and] (B) appear to be intended - (i) to intimidate or coerce a civilian population; (ii) to influence the policy of a government by intimidation or coercion; or (iii) to affect the conduct of a government by assassination or kidnapping..." The types of technology for countering terrorism could include, but are not limited to, systems for detecting/identifying explosives, aircraft sensors/security systems, and vehicular barricades/disabling systems.

Applicants who desire that an application relating to inventions for countering terrorism be made special should file a petition with the petition fee under 37 CFR 1.17(h) requesting the U.S. Patent and Trademark Office to make the application special. The petition for special status should be accompanied by a statement explaining how the invention contributes to countering terrorism.

Foreword

This Manual is published to provide U.S. Patent and Trademark Office patent examiners, applicants, attorneys, agents, and representatives of applicants with a reference work on the practices and procedures relative to the prosecution of patent applications before the U.S. Patent and Trademark Office. It contains instructions to

examiners, as well as other material in the nature of information and interpretation, and outlines the current procedures which the examiners are required or authorized to follow in appropriate cases in the normal examination of a patent application. The Manual does not have the force of law or the force of the rules in Title 37 of the Code of Federal Regulations.

***

Examiners will be governed by the applicable statutes, rules, decisions, and orders and instructions issued by the Commissioner and the Assistant Commissioners. Orders and Notices still in force which relate to the subject matter included in this Manual are incorporated in the text. Orders and Notices, or portions thereof, relating to the examiners' duties and functions which have been omitted or not incorporated in the text may be considered obsolete.

UNITED STATES PATENT AND TRADEMARK OFFICE

COMMISSIONER FOR PATENTS
UNITED STATES PATENT AND TRADEMARK OFFICE
P.O. BOX 1450
ALEXANDRIA, VA 22313-1450
www.uspto.gov

Paper No. 7

KONRAD RAYNES VICTOR & MANN LLP
315 S. BEVERLY DRIVE, SUITE 210
BEVERLY HILLS CA 90212

COPY MAILED

DEC 1 0 2003

OFFICE OF PETITIONS

In re Application of
Tim A. Von Kaenel et al.
Application No. 10/388,666
Filed: March 14, 2003
Attorney Docket No. Q 02-1

DECISION GRANTING
PETITION

This is a decision on the petition under 37 CFR 1.10 (c) filed December 4, 2003 to correct the filing date to March 14, 2003, rather than the presently accorded filing date of March 12, 2003.

Petitioner alleges that the application was deposited in Express Mail service on March 14, 2003. In support, on December 4, 2003, petitioner supplied a copy of Express Mail Label No. EV162023976US (the same Express Mail number found on the transmittal sheet accompanying the original application papers located in the official file). The "date-in" on the Express Mail Label is March 14, 2003.

In view of the above, the petition is granted and since no fee is due, none has been charged.

The application is being forwarded to the Office of Initial Patent Examination for correction of the **filing date to March 14, 2003** and for issuance of a corrected filing receipt.

Telephone inquiries related to this matter should be directed to the undersigned Petitions Attorney at 703-305-4497.

Patricia Faison-Ball
Senior Petitions Attorney
Office of Petitions

UNITED STATES PATENT AND TRADEMARK OFFICE

UNITED STATES DEPARTMENT OF COMMERCE
United States Patent and Trademark Office
Address: COMMISSIONER FOR PATENTS
P.O. Box 1450
Alexandria, Virginia 22313-1450
www.uspto.gov

APPL NO.	FILING OR 371 (c) DATE	ART UNIT	FIL FEE REC'D	ATTY.DOCKET NO	DRAWINGS	TOT CLMS	IND CLMS
10/388,666	03/14/2003	2171	3376	Q 02-1	182	56	25

CONFIRMATION NO. 1602

KONRAD RAYNES VICTOR & MANN LLP
315 S. Beverly Drive, Suite 210
Beverly Hills, CA 90212

UPDATED FILING RECEIPT

OC000000012088602

Date Mailed: 03/11/2004

Receipt is acknowledged of this regular Patent Application. It will be considered in its order and you will be notified as to the results of the examination. Be sure to provide the U.S. APPLICATION NUMBER, FILING DATE, NAME OF APPLICANT, and TITLE OF INVENTION when inquiring about this application. Fees transmitted by check or draft are subject to collection. Please verify the accuracy of the data presented on this receipt. **If an error is noted on this Filing Receipt, please write to the Office of Initial Patent Examination's Filing Receipt Corrections, facsimile number 703-746-9195. Please provide a copy of this Filing Receipt with the changes noted thereon. If you received a "Notice to File Missing Parts" for this application, please submit any corrections to this Filing Receipt with your reply to the Notice. When the USPTO processes the reply to the Notice, the USPTO will generate another Filing Receipt incorporating the requested corrections (if appropriate).**

Applicant(s)

Tim A. von Kaenel, Coto de Caza, CA;
David Neil Dyrnaes, Newport Coast, CA;
C. Suresh Kumar, Ladera Ranch, CA;
Jared Paul Wayman, Laguna Niguel, CA;
Jonathan David Goodwin, Laguna Niguel, CA;
Craig Evan Trivelpiece, Newport Beach, CA;
Joseph Mihalich, Rancho Santa Margarita, CA;
Anthony Page Jenkins, Aliso Viejo, CA;
Richard Hoyt Odom, JR., Charlottesville, VA;
Mark Andrew Stier, Laguna Neguel, CA;
Anne Janetta Obee, Santa Ana, CA;

Domestic Priority data as claimed by applicant

This appln claims benefit of 60/364,807 03/16/2002
and claims benefit of 60/433,597 12/16/2002
and claims benefit of 60/437,990 01/06/2003

Foreign Applications

If Required, Foreign Filing License Granted: 06/16/2003

Projected Publication Date: 06/17/2004

Non-Publication Request: No

Early Publication Request: No

Title

Method, system, and program for an improved enterprise spatial system

Preliminary Class

707

LICENSE FOR FOREIGN FILING UNDER
Title 35, United States Code, Section 184
Title 37, Code of Federal Regulations, 5.11 & 5.15

GRANTED

The applicant has been granted a license under 35 U.S.C. 184, if the phrase "IF REQUIRED, FOREIGN FILING LICENSE GRANTED" followed by a date appears on this form. Such licenses are issued in all applications where the conditions for issuance of a license have been met, regardless of whether or not a license may be required as set forth in 37 CFR 5.15. The scope and limitations of this license are set forth in 37 CFR 5.15(a) unless an earlier license has been issued under 37 CFR 5.15(b). The license is subject to revocation upon written notification. The date indicated is the effective date of the license, unless an earlier license of similar scope has been granted under 37 CFR 5.13 or 5.14.

This license is to be retained by the licensee and may be used at any time on or after the effective date thereof unless it is revoked. This license is automatically transferred to any related applications(s) filed under 37 CFR 1.53(d). This license is not retroactive.

The grant of a license does not in any way lessen the responsibility of a licensee for the security of the subject matter as imposed by any Government contract or the provisions of existing laws relating to espionage and the national security or the export of technical data. Licensees should apprise themselves of current regulations especially with respect to certain countries, of other agencies, particularly the Office of Defense Trade Controls, Department of State (with respect to Arms, Munitions and Implements of War (22 CFR 121-128)); the Office of Export Administration, Department of Commerce (15 CFR 370.10 (j)); the Office of Foreign Assets Control, Department of Treasury (31 CFR Parts 500+) and the Department of Energy.

NOT GRANTED

No license under 35 U.S.C. 184 has been granted at this time, if the phrase "IF REQUIRED, FOREIGN FILING LICENSE GRANTED" DOES NOT appear on this form. Applicant may still petition for a license under 37 CFR 5.12, if a license is desired before the expiration of 6 months from the filing date of the application. If 6 months has lapsed from the filing date of this application and the licensee has not received any indication of a secrecy order under 35 U.S.C. 181, the licensee may foreign file the application pursuant to 37 CFR 5.15(b).

JCWSCS 1 1 MAR 2004

MeadWestvaco **Facsimile**

MeadWestvaco Corporation
Charleston Technical Center – Law Dept.
5255 Virginia Avenue
P. O. Box 118005
Charleston, SC 29423-8005

DATE:	March 10, 2004
TO:	Delora Dillard
COMPANY:	USPTO Office of Initial Patent Examination
FAX #:	1-703-308-7751
FROM:	Susan Harrison
SENDER'S PHONE #:	(843) 746-8493
SENDER'S FAX #:	(843) 746-8494
SUBJECT:	Application No. 10/388,666, Filed March 14, 2003 Our Case Docket No. Q 02-1 Konrad Docket No. 65.003
TOTAL NUMBER OF PAGES:	4 (including cover sheet)

Attached please find a copy of the filing receipt mailed on June 16, 2003 and the Decision Granting Petition from the Office of Petitions dated December 10, 2003.

To date, we have not yet received a corrected filing receipt changing the filing date to March 14, 2003 in lieu of March 12, 2003.

As a response is needed prior to March 25, 2004 in a PCT application, I would appreciate your assistance in generating a new filing receipt on U. S. Serial No. 10/388,666 at your earliest convenience.

Thank you for your kind attention to this matter. Should you require any further information, please do not hesitate to contact me.

PLEASE ACKNOWLEDGE RECEIPT

cc: Janaki Davda (Konrad Raynes) 310-556-7984

This entire transmission is intended only for the use of the individual or entity to which it is addressed and may contain information that is privileged, confidential, and exempt from disclosure under applicable law. If the reader of this message is not intended recipient, or the employee or agent responsible for delivering the message of the intended recipient, you are hereby notified that any dissemination, distribution, or copying of this communication is strictly prohibited. If you have received this communication in error, please notify us immediately by telephone and return the original message to us at the above address via the U.S. Postal Service. You will be reimbursed for all reasonable expenses.

65.03

UNITED STATES PATENT AND TRADEMARK OFFICE

UNITED STATES DEPARTMENT OF COMMERCE
United States Patent and Trademark Office
Address: COMMISSIONER OF PATENTS AND TRADEMARKS
P.O. Box 1450
Alexandria, Virginia 22313-1450
www.uspto.gov

03-14-03

APPLICATION NUMBER	FILING DATE	GRP ART UNIT	FIL FEE REC'D	ATTY.DOCKET.NO	DRAWINGS	TOT CLAIMS	IND CLAIMS
10/388,666	~~03/12/2003~~	2171	3246	Q 02-1	182	56	25

CONFIRMATION NO. 1602

KONRAD RAYNES VICTOR & MANN LLP
315 S. Beverly Drive, Suite 210
Beverly Hills, CA 90212

FILING RECEIPT

OC000000010273448

Date Mailed: 06/16/2003

Receipt is acknowledged of this regular Patent Application. It will be considered in its order and you will be notified as to the results of the examination. Be sure to provide the U.S. APPLICATION NUMBER, FILING DATE, NAME OF APPLICANT, and TITLE OF INVENTION when inquiring about this application. Fees transmitted by check or draft are subject to collection. Please verify the accuracy of the data presented on this receipt. **If an error is noted on this Filing Receipt, please write to the Office of Initial Patent Examination's Filing Receipt Corrections, facsimile number 703-746-9195. Please provide a copy of this Filing Receipt with the changes noted thereon. If you received a "Notice to File Missing Parts" for this application, please submit any corrections to this Filing Receipt with your reply to the Notice. When the USPTO processes the reply to the Notice, the USPTO will generate another Filing Receipt incorporating the requested corrections (if appropriate).**

Applicant(s)

Tim A. von Kaenel, Coto de Caza, CA;
David Neil Dyrnaes, Newport Coast, CA;
Suresh C. Kumar, Ladera Ranch, CA;
Jared Paul Wayman, Laguna Niguel, CA;
Jonathan David Goodwin, Laguna Niguel, CA;
Craig Evan Trivelpiece, Newport Beach, CA;
Joseph Mihalich, Rancho Santa Margarita, CA;
Anthony Page Jenkins, Aliso Viejo, CA;
Richard Hoyt Odom, JR., Charlottesville, VA;
Mark Andrew Stier, Laguna Neguel, CA;
Anne Janetta Obee, Santa Ana, CA;

RECEIVED
JUN 19 2003
Konrad Raynes
Victor & Mann, LLP

DOCKETED - AYC
• PROOFED
2 3 2003
BY VS

Domestic Priority data as claimed by applicant

This appln claims benefit of 60/364,807 03/16/2002
and claims benefit of 60/433,597 12/16/2002
and claims benefit of 60/437,990 01/06/2003

Foreign Applications

If Required, Foreign Filing License Granted: 06/16/2003

Projected Publication Date: To Be Determined - pending completion of Missing Parts

Non-Publication Request: No

Early Publication Request: No

Title

Method, system, and program for an improved enterprise spatial system

Preliminary Class

707

LICENSE FOR FOREIGN FILING UNDER
Title 35, United States Code, Section 184
Title 37, Code of Federal Regulations, 5.11 & 5.15

GRANTED

The applicant has been granted a license under 35 U.S.C. 184, if the phrase "IF REQUIRED, FOREIGN FILING LICENSE GRANTED" followed by a date appears on this form. Such licenses are issued in all applications where the conditions for issuance of a license have been met, regardless of whether or not a license may be required as set forth in 37 CFR 5.15. The scope and limitations of this license are set forth in 37 CFR 5.15(a) unless an earlier license has been issued under 37 CFR 5.15(b). The license is subject to revocation upon written notification. The date indicated is the effective date of the license, unless an earlier license of similar scope has been granted under 37 CFR 5.13 or 5.14.

This license is to be retained by the licensee and may be used at any time on or after the effective date thereof unless it is revoked. This license is automatically transferred to any related applications(s) filed under 37 CFR 1.53(d). This license is not retroactive.

The grant of a license does not in any way lessen the responsibility of a licensee for the security of the subject matter as imposed by any Government contract or the provisions of existing laws relating to espionage and the national security or the export of technical data. Licensees should apprise themselves of current regulations especially with respect to certain countries, of other agencies, particularly the Office of Defense Trade Controls, Department of State (with respect to Arms, Munitions and Implements of War (22 CFR 121-128)); the Office of Export Administration, Department of Commerce (15 CFR 370.10 (j)); the Office of Foreign Assets Control, Department of Treasury (31 CFR Parts 500+) and the Department of Energy.

NOT GRANTED

No license under 35 U.S.C. 184 has been granted at this time, if the phrase "IF REQUIRED, FOREIGN FILING LICENSE GRANTED" DOES NOT appear on this form. Applicant may still petition for a license under 37 CFR 5.12, if a license is desired before the expiration of 6 months from the filing date of the application. If 6 months has lapsed from the filing date of this application and the licensee has not received any indication of a secrecy order under 35 U.S.C. 181, the licensee may foreign file the application pursuant to 37 CFR 5.15(b).

1

65.03

UNITED STATES PATENT AND TRADEMARK OFFICE

COMMISSIONER FOR PATENTS
UNITED STATES PATENT AND TRADEMARK OFFICE
P.O. BOX 1450
ALEXANDRIA, VA 22313-1450
www.uspto.gov

Paper No. 7
DOCKETED - AYC

KONRAD RAYNES VICTOR & MANN LLP
315 S. BEVERLY DRIVE, SUITE 210
BEVERLY HILLS CA 90212

COPY MAILED

DEC 1 0 2003

OFFICE OF PETITIONS

In re Application of
Tim A. Von Kaenel et al.
Application No. 10/388,666
Filed: March 14, 2003
Attorney Docket No. Q 02-1

DECISION GRANTING PETITION

This is a decision on the petition under 37 CFR 1.10 (c) filed December 4, 2003 to correct the filing date to March 14, 2003, rather than the presently accorded filing date of March 12, 2003.

Petitioner alleges that the application was deposited in Express Mail service on March 14, 2003. In support, on December 4, 2003, petitioner supplied a copy of Express Mail Label No. EV162023976US (the same Express Mail number found on the transmittal sheet accompanying the original application papers located in the official file). The "date-in" on the Express Mail Label is March 14, 2003.

In view of the above, the petition is granted and since no fee is due, none has been charged.

The application is being forwarded to the Office of Initial Patent Examination for correction of the **filing date to March 14, 2003** and for issuance of a corrected filing receipt.

Telephone inquiries related to this matter should be directed to the undersigned Petitions Attorney at 703-305-4497.

Patricia Faison-Ball

Patricia Faison-Ball
Senior Petitions Attorney
Office of Petitions

RECEIVED
DEC 1 2 2003
Konrad Raynes
Victor & Mann, LLP

UNITED STATES PATENT AND TRADEMARK OFFICE

Commissioner for Patents
United States Patent and Trademark Office
P.O. Box 1450
Alexandria, VA 22313-1450
www.uspto.gov

Attn: Patent Department
QUALCOMM Incorporated
5775 Morehouse Drive
San Diego CA 92121-1714

COPY MAILED

JUL 09 2007

OFFICE OF PETITIONS

In re Application of :
Hawkes, et al. :
Application No. 10/388,669 :
Filed: March 14, 2003 :
Attorney Docket No. 010114 :
For: CRYPTOSYSTEM FOR
COMMUNICATION NETWORKS

ON PETITION

This is a decision on the petition under 37 CFR 1.137(b), filed February 16, 2007, to revive the above-identified application.

The petition under 37 CFR 1.137(b) is **GRANTED**.

This application became abandoned for failure to timely reply to the Restriction Requirement, mailed July 24, 2006, which set a one month shortened statutory period for reply. No extensions of time having been obtained pursuant to 37 CFR 1.136(a) and no reply being received in the Office, this application became abandoned on August 25, 2006. No Notice of Abandonment has been mailed.

Applicants have submitted a proper reply to the Restriction Requirement in the form of an election, an acceptable statement of the unintentional nature of the delay in responding to the Restriction Requirement, and the $1,500.00 petition fee.

Regarding the statement of delay: The statement of unintentional delay presented in the petition does not comply with the current rule. 37 CFR 1.137(b)(3) requires a statement that "the entire delay in filing the required reply from the due date for the reply until the filing of a grantable petition pursuant to 37 CFR 1.137(b) was unintentional" be submitted. However, the statement presented will be accepted and construed as meaning that "the entire delay in filing the required reply from the due date for the reply until the filing of a grantable petition pursuant to 37 CFR 1.137(b) was unintentional." If this is an incorrect interpretation in view of the rules, petitioner is required to provide a statement to that effect.

All requirements under 37 CFR 1.137(b) being met, the petition is **granted**.

After the mailing of this decision, the file will be returned to Technology Center AU 2135 for consideration of the election filed on February 16, 2007.

Telephone inquiries concerning this matter may be directed to the undersigned at (571) 272-3230.

Shirene Willis Brantley
Senior Petitions Attorney
Office of Petitions

UNITED STATES PATENT AND TRADEMARK OFFICE

Commissioner for Patents
United States Patent and Trademark Office
P.O. Box 1450
Alexandria, VA 22313-1450
www.uspto.gov

Jeffrey S. Abel, Esq.
Toler, Larson & Abel, L.L.P.
5000 Plaza On The Lake, Ste. 265
Austin, TX 78746

MAILED

AUG 05 2005

Director's Office
Group 3700

In re Application of
WARBURTON-PITT, STEPHEN
Application No.: 10/388,678
Filed: March 14, 2003

DECISION ON PETITION

This application is before the Director of Technology Center 3700 for reconsideration of the Notice of Abandonment mailed October 27, 2004 for failure to timely pay the issue fee due September 1, 2004 required by the Notice of Allowance, mailed June 1, 2004. In view of the statements in the letter received February 28, 2005 alleging non-receipt, the submission is being treated as a petition under 37 CFR 1.181 to withdraw the holding of abandonment in the above-identified application. No fee is required.

The petition is granted.

In support of the request, petitioner has provided a showing of non-receipt of the Office action in accordance with MPEP 711.03(c)IA. Furthermore, applicant has provided a copy of a change of address form and a stamped postcard receipt, filed August 20, 2003 that were not in the file record. So, the non-receipt is based on the office not timely updating the correspondence address.

In view of the above, the Notice of Abandonment mailed October 27, 2004 is in error and is hereby vacated. The holding of abandonment is withdrawn.

It is further noted that a revocation of power of attorney, appointment of new power of attorney, and change of correspondence address was subsequently filed on June 20, 2005. Accordingly, this decision will be mailed to the current address of record.

The Office communication will be remailed and the shortened statutory period that was originally set forth in the Office communication shall be restarted to run from the mail date of the newly supplied Office action or notice.

Summary: Holding of Abandonment Withdrawn.

Richard A. Bertsch, Director
Technology Center 3700

UNITED STATES PATENT AND TRADEMARK OFFICE

Commissioner for Patents
United States Patent and Trademark Office
P.O. Box 1450
Alexandria, VA 22313-1450
www.uspto.gov
DIW Jan-06

TOLER & LARSON & ABEL L.L.P.
5000 PLAZA ON THE LAKE STE 265
AUSTIN TX 78746

COPY MAILED

JAN 11 2006

OFFICE OF PETITIONS

In re Application of	:	
Stephen Warburton-Pitt	:	LETTER IN REGARDS TO
Application No. 10/388,678	:	DECISION ON PETITION
Filed: 14 March, 2003	:	
Atty Docket No. O-3619	:	

This is a letter in reference to the communication filed on 7 October, 2005 (postcard date 20 June, 2005), regarding a petition to withdraw the holding of abandonment filed on 28 February, 2005, requesting withdraw of the holding of abandonment.

A review of the record reveals that a decision granting the petition to withdraw the holding of abandonment was mailed on 5 August, 2005. As such, the the present petition was filed on 20 June, 2005, and that a decision granting the petition to withdraw the holding of abandonment was mailed to the address of record on 5 August, 2005. As such, the application is not abandoned.

The address on the petition is different than the correspondence address of record. A copy of this communication will be mailed to the address on the petition. All future correspondence will be mailed solely to the address of record.

The application will be referred to the Office of Publications to await receipt of the issue fee.

Telephone inquiries concerning this matter may be directed to the undersigned at (571) 272-3231.

D Wood

Douglas I. Wood
Senior Petitions Attorney
Office of Petitions

cf: Mike W. Crosby
Saint-Grobain Corporation
1 New Bond Street
MS/301-505
Worcester MA 01615

UNITED STATES PATENT AND TRADEMARK OFFICE

COMMISSIONER FOR PATENTS
UNITED STATES PATENT AND TRADEMARK OFFICE
P.O. BOX 1450
ALEXANDRIA, VA 22313-1450
www.uspto.gov

MAIL

APR - 9 2004

DIRECTOR OFFICE
TECHNOLOGY CENTER 2600

GALLAGHER & LATHROP, A PROFESSIONAL CORPORATION
601 CALIFORNIA ST
SUITE 1111
SAN FRANCISCO, CA 94108

In re Application of :
Peter D. Swartz. :
Application No. 10/388,686 : DECISION ON REQUEST TO
Filed: March 14, 2003 : WITHDRAW FROM RECORD
For: FILM SOURCE VIDEO DETECTION :

This is a decision on the request for withdrawal as agent of record filed on August 18, 2003.

A grantable request to withdraw as attorney/agent of record must:
(1) indicate the present mailing address of the attorney(s)/agent(s) who seek(s) to withdraw, and
(2) be signed by each attorney/agent seeking to withdraw or clearly be signed on their behalf, and
(3) be *approved* at least thirty (30) days prior to the maximum extendable period for response to any outstanding Office Action, and
(4) indicate the address to which future correspondence should be mailed.

Petitioner has satisfied the requirements for successfully requesting withdrawal. Accordingly, *the request is* ***granted.***

It is noted that there was a request to change address via a new customer number filed August 25, 2003. However, there is no evidence that the person filing the request had power of attorney in the application. Therefore, all future correspondence will be addressed to the below-listed address provided by the attorneys of record within the request to withdraw until otherwise notified by applicant. Applicant is reminded of the obligation to promptly notify the Patent and Trademark Office of any change in power of attorney and correspondence address to ensure receipt of all communications from the Office.

Dwayne D. Bost
Special Program Examiner
Technology Center 2600
Communications
(703) 305-4778

BEST AVAILABLE COPY

UNITED STATES PATENT AND TRADEMARK OFFICE

Commissioner for Patents
United States Patent and Trademark Office
P.O. Box 1450
Alexandria, VA 22313-1450
www.uspto.gov

HEWLETT PACKARD COMPANY
P O BOX 272400, 3404 E. HARMONY ROAD
INTELLECTUAL PROPERTY ADMINISTRATION
FORT COLLINS CO 80527-2400

COPY MAILED

OCT 09 2008

OFFICE OF PETITIONS

In re Application of
Michael A. Pate et al.
Application No. 10/388,688
Filed: March 14, 2003
Attorney Docket No. 100204753-1

DECISION ON PETITION

This is a decision on the petition under the unintentional provisions of 37 CFR 1.137(b), filed May 21, 2008, to revive the above-identified application.

The petition is **GRANTED**.

This application became abandoned for failure to timely pay the issue and publication fees on or before January 15, 2008, as required by the Notice of Allowance and Fee(s) Due, mailed October 15, 2007. Accordingly, the date of abandonment of this application is January 16, 2008.

The petition satisfies the requirements of 37 CFR 1.137(b) in that petitioner has supplied (1) the reply in the form of payment of the issue fee of $1440.00 and the publication fee of $300.00, (2) the petition fee of $1540.00; and (3) a proper statement of unintentional delay.

It is not apparent whether the statement of unintentional delay was signed by a person who would have been in a position of knowing that the entire delay in filing the required reply from the due date for the reply until the filing of a grantable petition pursuant to 37 CFR 1.137(b) was unintentional. Nevertheless, in accordance with 37 CFR 10.18, the statement is accepted as constituting a certification of unintentional delay. However, in the event that petitioner has no knowledge that the delay was unintentional, petitioner must make such an inquiry to ascertain that, in fact, the delay was unintentional. If petitioner discovers that the delay was intentional, petitioner must so notify the Office.

There is no indication that the person signing the instant petition was ever given a power of attorney or authorization of agent to prosecute the above-identified application. In accordance with 37 CFR 1.34(a), the signature appearing on the petition shall constitute a representation to

the United States Patent and Trademark Office that he/she is authorized to represent the particular party in whose behalf he/she acts. However, if petitioner desires to receive future correspondence regarding this application, the appropriate power of attorney or authorization of agent must be submitted. A courtesy copy of this decision is being mailed to petitioner. Nevertheless, all future correspondence regarding this application file will be directed solely to the address of record until otherwise instructed.

Telephone inquiries concerning this decision should be directed to JoAnne Burke at (571) 272-4584.

This application is being referred to the Office of Data Management for processing into a patent.

Ramesh Krishnamurthy

Ramesh Krishnamurthy
Petitions Examiner
Office of Petitions

cc: Roger D. Greer
GREER, BURNS & CRAIN, LTD.
300 South Wacker Drive
Chicago, IL 60606

Application No: 10/388,688 Date: 9/8/08

CHECKLIST - PETITION TO REVIVE (UNINTENTIONAL) 37 CFR 1.137(b)

Petition under 37 CFR 1.137(b) requires:

1. Petition fee;
2. Reply and/or issue fee;
3. Terminal disclaimer with disclaimer fee - utility and plant filed before 6/8/95 and all design cases;
4. Statement that the entire delay was unintentional.

Petition Date: 5/21/08

Petition Fee: ( ) $770/SM (✓) $1540/LG ( ) Not Paid

Is statement of unintentional delay present? (✓)YES ( )NO (Can statement be construed as unintentional?)

Is petition signed by attorney of record? (✓)YES ( )NO Petition address the same as address in palm. ( )YES ( )NO

Mail Date of Office Action: 11/28/07 – 10/15/07

Type of Office Action: Notice of allowance

Statutory Response Period Set: ( ) 30 days ( ) 1 month ( ) 2 months (✓) 3 months

Ext of time obtained w/in SSP: ( )None ( )1 month ( )2 months ( )3 months ( )4 months

Abandonment Date: 1/16/07

Type of reply received: IFW/PUB FEE

Terminal Disclaimer required: ( )YES (✓)NO (utility applications filed after 6/8/95 or before 5/29/00 and all design applications)

Petition Decision Codes

502 - 37 CFR 1.137(b) Revival based on unintentional delay in abandon application
510 - 37 CFR 1.137(b) Revival to accept late payment of issue fee (unintentional)

510

Fee Codes

1453/2453 *$1540/$770* *502/510 Petitions*

Paralegal: [signature] ( )Dismissed (✓)Granted

MAG:01/07

O I P E IAP78
MAY 21 2008
PATENT & TRADEMARK OFFICE

PTO/SB/64 (01-08)
Approved for use through 05/31/2008. OMB 0651-0031
U.S. Patent and Trademark Office; U.S. DEPARTMENT OF COMMERCE
Under the Paperwork Reduction Act of 1995, no persons are required to respond to a collection of information unless it displays a valid OMB control number.

PETITION FOR REVIVAL OF AN APPLICATION FOR PATENT ABANDONED UNINTENTIONALLY UNDER 37 CFR 1.137(b)

Docket Number (Optional) 100204753-1

First named inventor: Michael A. Pate

Application No.: 10/388,688

Art Unit: 2622

Filed: 03/14/2003

Examiner: Yenke, Brian P.

Title: ADAPTIVE IMAGE DISPLAY

RECEIVED
MAY 29 2008
OFFICE OF PETITIONS

Attention: Office of Petitions
Mail Stop Petition
Commissioner for Patents
P.O. Box 1450
Alexandria, VA 22313-1450
FAX (571) 273-8300

NOTE: If information or assistance is needed in completing this form, please contact Petitions Information at (571) 272-3282.

The above-identified application became abandoned for failure to file a timely and proper reply to a notice or action by the United States Patent and Trademark Office. The date of abandonment is the day after the expiration date of the period set for reply in the office notice or action plus an extensions of time actually obtained.

APPLICANT HEREBY PETITIONS FOR REVIVAL OF THIS APPLICATION

NOTE: A grantable petition requires the following items:
(1) Petition fee;
(2) Reply and/or issue fee;
(3) Terminal disclaimer with disclaimer fee - required for all utility and plant applications filed before June 8, 1995; and for all design applications; and
(4) Statement that the entire delay was unintentional.

1. Petition fee
☐ Small entity-fee $ _____ (37 CFR 1.17(m)). Applicant claims small entity status. See 37 CFR 1.27.
☑ Other than small entity – fee $ 1,540 (37 CFR 1.17(m))

2. Reply and/or fee
A. The reply and/or fee to the above-noted Office action in the form of _____(identify type of reply):
☐ has been filed previously on _____.
☐ is enclosed herewith.

B. The issue fee and publication fee (if applicable) of $ 1,740.
☐ has been paid previously on _____.
☑ is enclosed herewith.

This collection of information is required by 37 CFR 1.137(b). The information is required to obtain or retain a benefit by the public which is to file (and by the USPTO to process) an application. Confidentiality is governed by 35 U.S.C. 122 and 37 CFR 1.11 and 1.14. This collection is estimated to take 1.0 hour to complete, including gathering, preparing, and submitting the completed application form to the USPTO. Time will vary depending upon the individual case. Any comments on the amount of time you require to complete this form and/or suggestions for reducing this burden, should be sent to the Chief Information Officer, U.S. Patent and Trademark Office, U.S. Department of Commerce, P.O. Box 1450, Alexandria, VA 22313-1450. DO NOT SEND FEES OR COMPLETED FORMS TO THIS ADDRESS. **SEND TO: Mail Stop Petition, Commissioner for Patents, P.O. Box 1450, Alexandria, VA 22313-1450.**

If you need assistance in completing the form, call 1-800-PTO-9199 and select option 2.

Under the Paperwork Reduction Act of 1995, no persons are required to respond to a collection of information unless it displays a valid OMB control number.

3. Terminal disclaimer with disclaimer fee

☑ Since this utility/plant application was filed on or after June 8, 1995, no terminal disclaimer is required.

☐ A terminal disclaimer (and disclaimer fee (37 CFR 1.20(d)) of $ _____ for a small entity or $ _____ for other than a small entity) disclaiming the required period of time is enclosed herewith (see PTO/SB/63).

4. STATEMENT: The entire delay in filing the required reply from the due date for the required reply until the filing of a grantable petition under 37 CFR 1.137(b) was unintentional. [NOTE: The United States Patent and Trademark Office may require additional information if there is a question as to whether either the abandonment or the delay in filing a petition under 37 CFR 1.137(b) was unintentional (MPEP 711.03(c), subsections (III)(C) and (D)).]

WARNING:

Petitioner/applicant is cautioned to avoid submitting personal information in documents filed in a patent application that may contribute to identity theft. Personal information such as social security numbers, bank account numbers, or credit card numbers (other than a check or credit card authorization form PTO-2038 submitted for payment purposes) is never required by the USPTO to support a petition or an application. If this type of personal information is included in documents submitted to the USPTO, petitioners/applicants should consider redacting such personal information from the documents before submitting them to the USPTO. Petitioner/applicant is advised that the record of a patent application is available to the public after publication of the application (unless a non-publication request in compliance with 37 CFR 1.213(a) is made in the application) or issuance of a patent. Furthermore, the record from an abandoned application may also be available to the public if the application is referenced in a published application or an issued patent (see 37 CFR 1.14). Checks and credit card authorization forms PTO-2038 submitted for payment purposes are not retained in the application file and therefore are not publicly available.

Signature	May 16, 2008 Date
Roger D. Greer Typed or printed name	26,174 Registration Number, if applicable
GREER, BURNS & CRAIN,LTD. Address	(312) 360-0080 Telephone Number
300 South Wacker Drive, Chicago, IL 60606 Address	

Enclosures:
- ☑ Fee Payment
- ☑ Reply
- ☐ Terminal Disclaimer Form
- ☐ Additional sheets containing statements establishing unintentional delay
- ☐ Other: _____

CERTIFICATE OF MAILING OR TRANSMISSION [37 CFR 1.8(a)]

I hereby certify that this correspondence is being:

☑ Deposited with the United States Postal Service on the date shown below with sufficient postage as first class mail in an envelope addressed to: Mail Stop Petition, Commissioner for Patents, P. O. Box 1450, Alexandria, VA 22313-1450.

☐ Transmitted by facsimile on the date shown below to the United States Patent and Trademark Office at (571) 273-8300.

May 16, 2008 Date	Signature
	Roger D. Greer Typed or printed name of person signing certificate

O I P E - IAP78
MAY 21 2008
PATENT & TRADEMARK OFFICE

IFW BAC

PTO/SB/64 (01-08)
Approved for use through 05/31/2008. OMB 0651-0031
U.S. Patent and Trademark Office; U.S. DEPARTMENT OF COMMERCE
Under the Paperwork Reduction Act of 1995, no persons are required to respond to a collection of information unless it displays a valid OMB control number.

PETITION FOR REVIVAL OF AN APPLICATION FOR PATENT ABANDONED UNINTENTIONALLY UNDER 37 CFR 1.137(b)

Docket Number (Optional) 100204753-1

First named inventor: Michael A. Pate

Application No.: 10/388,688

Art Unit: 2622

Filed: 03/14/2003

Examiner: Yenke, Brian P.

Title: ADAPTIVE IMAGE DISPLAY

RECEIVED
MAY 29 2008
OFFICE OF PETITIONS

Attention: Office of Petitions
Mail Stop Petition
Commissioner for Patents
P.O. Box 1450
Alexandria, VA 22313-1450
FAX (571) 273-8300

NOTE: If information or assistance is needed in completing this form, please contact Petitions Information at (571) 272-3282.

The above-identified application became abandoned for failure to file a timely and proper reply to a notice or action by the United States Patent and Trademark Office. The date of abandonment is the day after the expiration date of the period set for reply in the office notice or action plus an extensions of time actually obtained.

APPLICANT HEREBY PETITIONS FOR REVIVAL OF THIS APPLICATION

NOTE: A grantable petition requires the following items:
(1) Petition fee;
(2) Reply and/or issue fee;
(3) Terminal disclaimer with disclaimer fee - required for all utility and plant applications filed before June 8, 1995; and for all design applications; and
(4) Statement that the entire delay was unintentional.

1. Petition fee
☐ Small entity-fee $ _____ (37 CFR 1.17(m)). Applicant claims small entity status. See 37 CFR 1.27.
☑ Other than small entity – fee $ 1,540 (37 CFR 1.17(m))

2. Reply and/or fee
A. The reply and/or fee to the above-noted Office action in the form of _____(identify type of reply):
☐ has been filed previously on _____.
☐ is enclosed herewith.

B. The issue fee and publication fee (if applicable) of $ 1,740.
☐ has been paid previously on _____.
☑ is enclosed herewith.

This collection of information is required by 37 CFR 1.137(b). The information is required to obtain or retain a benefit by the public which is to file (and by the USPTO to process) an application. Confidentiality is governed by 35 U.S.C. 122 and 37 CFR 1.11 and 1.14. This collection is estimated to take 1.0 hour to complete, including gathering, preparing, and submitting the completed application form to the USPTO. Time will vary depending upon the individual case. Any comments on the amount of time you require to complete this form and/or suggestions for reducing this burden, should be sent to the Chief Information Officer, U.S. Patent and Trademark Office, U.S. Department of Commerce, P.O. Box 1450, Alexandria, VA 22313-1450. DO NOT SEND FEES OR COMPLETED FORMS TO THIS ADDRESS. **SEND TO: Mail Stop Petition, Commissioner for Patents, P.O. Box 1450, Alexandria, VA 22313-1450.**

If you need assistance in completing the form, call 1-800-PTO-9199 and select option 2.

05/22/2008 CCHAU1 00000006 10388688
01 FC:1453 1540.00 OP

Under the Paperwork Reduction Act of 1995, no persons are required to respond to a collection of information unless it displays a valid OMB control number.

3. Terminal disclaimer with disclaimer fee

☑ Since this utility/plant application was filed on or after June 8, 1995, no terminal disclaimer is required.

☐ A terminal disclaimer (and disclaimer fee (37 CFR 1.20(d)) of $ _____ for a small entity or $ _____ for other than a small entity) disclaiming the required period of time is enclosed herewith (see PTO/SB/63).

4. STATEMENT: The entire delay in filing the required reply from the due date for the required reply until the filing of a grantable petition under 37 CFR 1.137(b) was unintentional. [NOTE: The United States Patent and Trademark Office may require additional information if there is a question as to whether either the abandonment or the delay in filing a petition under 37 CFR 1.137(b) was unintentional (MPEP 711.03(c), subsections (III)(C) and (D)).]

WARNING:

Petitioner/applicant is cautioned to avoid submitting personal information in documents filed in a patent application that may contribute to identity theft. Personal information such as social security numbers, bank account numbers, or credit card numbers (other than a check or credit card authorization form PTO-2038 submitted for payment purposes) is never required by the USPTO to support a petition or an application. If this type of personal information is included in documents submitted to the USPTO, petitioners/applicants should consider redacting such personal information from the documents before submitting them to the USPTO. Petitioner/applicant is advised that the record of a patent application is available to the public after publication of the application (unless a non-publication request in compliance with 37 CFR 1.213(a) is made in the application) or issuance of a patent. Furthermore, the record from an abandoned application may also be available to the public if the application is referenced in a published application or an issued patent (see 37 CFR 1.14). Checks and credit card authorization forms PTO-2038 submitted for payment purposes are not retained in the application file and therefore are not publicly available.

Signature	May 16, 2008 Date
Roger D. Greer Typed or printed name	26,174 Registration Number, if applicable
GREER, BURNS & CRAIN,LTD. Address	(312) 360-0080 Telephone Number
300 South Wacker Drive, Chicago, IL 60606 Address	

Enclosures: ☑ Fee Payment

☑ Reply

☐ Terminal Disclaimer Form

☐ Additional sheets containing statements establishing unintentional delay

☐ Other: _____

CERTIFICATE OF MAILING OR TRANSMISSION [37 CFR 1.8(a)]

I hereby certify that this correspondence is being:

☑ Deposited with the United States Postal Service on the date shown below with sufficient postage as first class mail in an envelope addressed to: Mail Stop Petition, Commissioner for Patents, P. O. Box 1450, Alexandria, VA 22313-1450.

☐ Transmitted by facsimile on the date shown below to the United States Patent and Trademark Office at (571) 273-8300.

May 16, 2008 Date	Signature
	Roger D. Greer Typed or printed name of person signing certificate

OIPE IAP78
MAY 21 2008
PATENT & TRADEMARK OFFICE

PART B - FEE(S) TRANSMITTAL

RECEIVED
MAY 29 2008
OFFICE OF PETITIONS

Complete and send this form, together with applicable fee(s), to: Mail Mail Stop ISSUE FEE
Commissioner for Patents
P.O. Box 1450
Alexandria, Virginia 22313-1450
or Fax (571)-273-2885

INSTRUCTIONS: This form should be used for transmitting the ISSUE FEE and PUBLICATION FEE (if required). Blocks 1 through 5 should be completed where appropriate. All further correspondence including the Patent, advance orders and notification of maintenance fees will be mailed to the current correspondence address as indicated unless corrected below or directed otherwise in Block 1, by (a) specifying a new correspondence address; and/or (b) indicating a separate "FEE ADDRESS" for maintenance fee notifications.

CURRENT CORRESPONDENCE ADDRESS (Note: Use Block 1 for any change of address)

7590 10/15/2007

HEWLETT-PACKARD COMPANY
Intellectual Property Administration
P. O. Box 272400
Fort Collins, CO 80527-2400

Note: A certificate of mailing can only be used for domestic mailings of the Fee(s) Transmittal. This certificate cannot be used for any other accompanying papers. Each additional paper, such as an assignment or formal drawing, must have its own certificate of mailing or transmission.

Certificate of Mailing or Transmission
I hereby certify that this Fee(s) Transmittal is being deposited with the United States Postal Service with sufficient postage for first class mail in an envelope addressed to the Mail Stop ISSUE FEE address above, or being facsimile transmitted to the USPTO (571) 273-2885, on the date indicated below.

Roger D. Greer (Depositor's name)
(Signature)
May 16, 2008 (Date)

APPLICATION NO.	FILING DATE	FIRST NAMED INVENTOR	ATTORNEY DOCKET NO.	CONFIRMATION NO.
10/388,688	03/14/2003	Michael A. Pate	100204753-1	2128

TITLE OF INVENTION: ADAPTIVE IMAGE DISPLAY

05/22/2008 HVUONG2 00000005 082025 10388688
01 FC:1504 300.00 DA
02 FC:1501 1440.00 DA

APPLN. TYPE	SMALL ENTITY	ISSUE FEE DUE	PUBLICATION FEE DUE	PREV. PAID ISSUE FEE	TOTAL FEE(S) DUE	DATE DUE
nonprovisional	NO	$1440	$300	$0	$1740	01/15/2008

EXAMINER	ART UNIT	CLASS-SUBCLASS
YENKE, BRIAN P	2622	348-602000

1. Change of correspondence address or indication of "Fee Address" (37 CFR 1.363).
☐ Change of correspondence address (or Change of Correspondence Address form PTO/SB/122) attached.
☐ "Fee Address" indication (or "Fee Address" Indication form PTO/SB/47; Rev 03-02 or more recent) attached. Use of a Customer Number is required.

2. For printing on the patent front page, list
(1) the names of up to 3 registered patent attorneys or agents OR, alternatively,
(2) the name of a single firm (having as a member a registered attorney or agent) and the names of up to 2 registered patent attorneys or agents. If no name is listed, no name will be printed.
1 ____
2 ____
3 ____

3. ASSIGNEE NAME AND RESIDENCE DATA TO BE PRINTED ON THE PATENT (print or type)
PLEASE NOTE: Unless an assignee is identified below, no assignee data will appear on the patent. If an assignee is identified below, the document has been filed for recordation as set forth in 37 CFR 3.11. Completion of this form is NOT a substitute for filing an assignment.

(A) NAME OF ASSIGNEE: Hewlett-Packard Development Company, L.P.
(B) RESIDENCE: (CITY and STATE OR COUNTRY): Houston, Texas

Please check the appropriate assignee category or categories (will not be printed on the patent): ☐ Individual ☒ Corporation or other private group entity ☐ Government

4a. The following fee(s) are submitted:
☒ Issue Fee
☒ Publication Fee (No small entity discount permitted)
☐ Advance Order - # of Copies ____

4b. Payment of Fee(s): (Please first reapply any previously paid issue fee shown above)
☐ A check is enclosed.
☐ Payment by credit card. Form PTO-2038 is attached.
☒ The Director is hereby authorized to charge the required fee(s), any deficiency, or credit any overpayment, to Deposit Account Number 08-2025 (enclose an extra copy of this form).

5. Change in Entity Status (from status indicated above)
☐ a. Applicant claims SMALL ENTITY status. See 37 CFR 1.27.
☐ b. Applicant is no longer claiming SMALL ENTITY status. See 37 CFR 1.27(g)(2).

NOTE: The Issue Fee and Publication Fee (if required) will not be accepted from anyone other than the applicant; a registered attorney or agent; or the assignee or other party in interest as shown by the records of the United States Patent and Trademark Office.

Authorized Signature ____ Date May 16, 2008
Typed or printed name Roger D. Greer Registration No. 26,174

This collection of information is required by 37 CFR 1.311. The information is required to obtain or retain a benefit by the public which is to file (and by the USPTO to process) an application. Confidentiality is governed by 35 U.S.C. 122 and 37 CFR 1.14. This collection is estimated to take 12 minutes to complete, including gathering, preparing, and submitting the completed application form to the USPTO. Time will vary depending upon the individual case. Any comments on the amount of time you require to complete this form and/or suggestions for reducing this burden, should be sent to the Chief Information Officer, U.S. Patent and Trademark Office, U.S. Department of Commerce, P.O. Box 1450, Alexandria, Virginia 22313-1450. DO NOT SEND FEES OR COMPLETED FORMS TO THIS ADDRESS. SEND TO: Commissioner for Patents, P.O. Box 1450, Alexandria, Virginia 22313-1450.
Under the Paperwork Reduction Act of 1995, no persons are required to respond to a collection of information unless it displays a valid OMB control number.

PART B - FEE(S) TRANSMITTAL

Complete and send this form, together with applicable fee(s), to: Mail Mail Stop ISSUE FEE
Commissioner for Patents
P.O. Box 1450
Alexandria, Virginia 22313-1450
or Fax (571)-273-2885

INSTRUCTIONS: This form should be used for transmitting the ISSUE FEE and PUBLICATION FEE (if required). Blocks 1 through 5 should be completed where appropriate. All further correspondence including the Patent, advance orders and notification of maintenance fees will be mailed to the current correspondence address as indicated unless corrected below or directed otherwise in Block 1, by (a) specifying a new correspondence address; and/or (b) indicating a separate "FEE ADDRESS" for maintenance fee notifications.

CURRENT CORRESPONDENCE ADDRESS (Note: Use Block 1 for any change of address)

7590 10/15/2007

HEWLETT-PACKARD COMPANY
Intellectual Property Administration
P. O. Box 272400
Fort Collins, CO 80527-2400

OIPE IAP78 MAY 21 2008 PATENT & TRADEMARK OFFICE

Note: A certificate of mailing can only be used for domestic mailings of the Fee(s) Transmittal. This certificate cannot be used for any other accompanying papers. Each additional paper, such as an assignment or formal drawing, must have its own certificate of mailing or transmission.

Certificate of Mailing or Transmission
I hereby certify that this Fee(s) Transmittal is being deposited with the United States Postal Service with sufficient postage for first class mail in an envelope addressed to the Mail Stop ISSUE FEE address above, or being facsimile transmitted to the USPTO (571) 273-2885, on the date indicated below.

Roger D. Greer (Depositor's name)
(Signature)
May 16, 2008 (Date)

APPLICATION NO.	FILING DATE	FIRST NAMED INVENTOR	ATTORNEY DOCKET NO.	CONFIRMATION NO.
10/388,688	03/14/2003	Michael A. Pate	100204753-1	2128

TITLE OF INVENTION: ADAPTIVE IMAGE DISPLAY

APPLN. TYPE	SMALL ENTITY	ISSUE FEE DUE	PUBLICATION FEE DUE	PREV. PAID ISSUE FEE	TOTAL FEE(S) DUE	DATE DUE
nonprovisional	NO	$1440	$300	$0	$1740	01/15/2008

EXAMINER	ART UNIT	CLASS-SUBCLASS
YENKE, BRIAN P	2622	348-602000

1. Change of correspondence address or indication of "Fee Address" (37 CFR 1.363).
- ☐ Change of correspondence address (or Change of Correspondence Address form PTO/SB/122) attached.
- ☐ "Fee Address" indication (or "Fee Address" Indication form PTO/SB/47; Rev 03-02 or more recent) attached. Use of a Customer Number is required.

2. For printing on the patent front page, list
(1) the names of up to 3 registered patent attorneys or agents OR, alternatively,
(2) the name of a single firm (having as a member a registered attorney or agent) and the names of up to 2 registered patent attorneys or agents. If no name is listed, no name will be printed.
1 ____
2 ____
3 ____

3. ASSIGNEE NAME AND RESIDENCE DATA TO BE PRINTED ON THE PATENT (print or type)

PLEASE NOTE: Unless an assignee is identified below, no assignee data will appear on the patent. If an assignee is identified below, the document has been filed for recordation as set forth in 37 CFR 3.11. Completion of this form is NOT a substitute for filing an assignment.

(A) NAME OF ASSIGNEE: Hewlett-Packard Development Company, L.P.
(B) RESIDENCE: (CITY and STATE OR COUNTRY): Houston, Texas

Please check the appropriate assignee category or categories (will not be printed on the patent): ☐ Individual ☒ Corporation or other private group entity ☐ Government

4a. The following fee(s) are submitted:
- ☒ Issue Fee
- ☒ Publication Fee (No small entity discount permitted)
- ☐ Advance Order - # of Copies ____

4b. Payment of Fee(s): (Please first reapply any previously paid issue fee shown above)
- ☐ A check is enclosed.
- ☐ Payment by credit card. Form PTO-2038 is attached.
- ☒ The Director is hereby authorized to charge the required fee(s), any deficiency, or credit any overpayment, to Deposit Account Number 08-2025 (enclose an extra copy of this form).

5. Change in Entity Status (from status indicated above)
- ☐ a. Applicant claims SMALL ENTITY status. See 37 CFR 1.27.
- ☐ b. Applicant is no longer claiming SMALL ENTITY status. See 37 CFR 1.27(g)(2).

NOTE: The Issue Fee and Publication Fee (if required) will not be accepted from anyone other than the applicant; a registered attorney or agent; or the assignee or other party in interest as shown by the records of the United States Patent and Trademark Office.

Authorized Signature ____ Date May 16, 2008
Typed or printed name Roger D. Greer Registration No. 26,174

This collection of information is required by 37 CFR 1.311. The information is required to obtain or retain a benefit by the public which is to file (and by the USPTO to process) an application. Confidentiality is governed by 35 U.S.C. 122 and 37 CFR 1.14. This collection is estimated to take 12 minutes to complete, including gathering, preparing, and submitting the completed application form to the USPTO. Time will vary depending upon the individual case. Any comments on the amount of time you require to complete this form and/or suggestions for reducing this burden, should be sent to the Chief Information Officer, U.S. Patent and Trademark Office, U.S. Department of Commerce, P.O. Box 1450, Alexandria, Virginia 22313-1450. DO NOT SEND FEES OR COMPLETED FORMS TO THIS ADDRESS. SEND TO: Commissioner for Patents, P.O. Box 1450, Alexandria, Virginia 22313-1450.
Under the Paperwork Reduction Act of 1995, no persons are required to respond to a collection of information unless it displays a valid OMB control number.

UNITED STATES PATENT AND TRADEMARK OFFICE

UNITED STATES DEPARTMENT OF COMMERCE
United States Patent and Trademark Office
Address: COMMISSIONER FOR PATENTS
P.O. Box 1450
Alexandria, Virginia 22313-1450
www.uspto.gov

APPLICATION NO.	FILING DATE	FIRST NAMED INVENTOR	ATTORNEY DOCKET NO.	CONFIRMATION NO.
10/388,688	03/14/2003	Michael A. Pate	100204753-1	2128

7590 11/28/2007
HEWLETT-PACKARD COMPANY
Intellectual Property Administration
P. O. Box 272400
Fort Collins, CO 80527-2400

EXAMINER
YENKE, BRIAN P

ART UNIT	PAPER NUMBER
2622	

MAIL DATE	DELIVERY MODE
11/28/2007	PAPER

Please find below and/or attached an Office communication concerning this application or proceeding.

The time period for reply, if any, is set in the attached communication.

Supplemental Notice of Allowability	Application No.	Applicant(s)	
	10/388,688	PATE ET AL.	
	Examiner	Art Unit	
	BRIAN P. YENKE	2622	

-- The MAILING DATE of this communication appears on the cover sheet with the correspondence address--

All claims being allowable, PROSECUTION ON THE MERITS IS (OR REMAINS) CLOSED in this application. If not included herewith (or previously mailed), a Notice of Allowance (PTOL-85) or other appropriate communication will be mailed in due course. **THIS NOTICE OF ALLOWABILITY IS NOT A GRANT OF PATENT RIGHTS.** This application is subject to withdrawal from issue at the initiative of the Office or upon petition by the applicant. See 37 CFR 1.313 and MPEP 1308.

1. ☒ This communication is responsive to *312 Amendment*.

2. ☒ The allowed claim(s) is/are *1,6-19,24-33,36,38-43,47-53,56,58-63,69-79 (renumbered as 1,15,2-13,16,26,17-24,27-33,35,42,36-40,43-49,51,52-56, 14,25,34,41,50 and 57 respectively)*.

3. ☐ Acknowledgment is made of a claim for foreign priority under 35 U.S.C. § 119(a)-(d) or (f).
   a) ☐ All b) ☐ Some* c) ☐ None of the:
      1. ☐ Certified copies of the priority documents have been received.
      2. ☐ Certified copies of the priority documents have been received in Application No. _____ .
      3. ☐ Copies of the certified copies of the priority documents have been received in this national stage application from the International Bureau (PCT Rule 17.2(a)).

   * Certified copies not received: _____.

Applicant has THREE MONTHS FROM THE "MAILING DATE" of this communication to file a reply complying with the requirements noted below. Failure to timely comply will result in ABANDONMENT of this application.
THIS THREE-MONTH PERIOD IS NOT EXTENDABLE.

4. ☐ A SUBSTITUTE OATH OR DECLARATION must be submitted. Note the attached EXAMINER'S AMENDMENT or NOTICE OF INFORMAL PATENT APPLICATION (PTO-152) which gives reason(s) why the oath or declaration is deficient.

5. ☐ CORRECTED DRAWINGS (as "replacement sheets") must be submitted.
   (a) ☐ including changes required by the Notice of Draftsperson's Patent Drawing Review (PTO-948) attached
      1) ☐ hereto or 2) ☐ to Paper No./Mail Date _____.
   (b) ☐ including changes required by the attached Examiner's Amendment / Comment or in the Office action of Paper No./Mail Date _____.

   Identifying indicia such as the application number (see 37 CFR 1.84(c)) should be written on the drawings in the front (not the back) of each sheet. Replacement sheet(s) should be labeled as such in the header according to 37 CFR 1.121(d).

6. ☐ DEPOSIT OF and/or INFORMATION about the deposit of BIOLOGICAL MATERIAL must be submitted. Note the attached Examiner's comment regarding REQUIREMENT FOR THE DEPOSIT OF BIOLOGICAL MATERIAL.

Attachment(s)

1. ☐ Notice of References Cited (PTO-892)
2. ☐ Notice of Draftperson's Patent Drawing Review (PTO-948)
3. ☐ Information Disclosure Statements (PTO/SB/08), Paper No./Mail Date _____
4. ☐ Examiner's Comment Regarding Requirement for Deposit of Biological Material
5. ☐ Notice of Informal Patent Application
6. ☐ Interview Summary (PTO-413), Paper No./Mail Date _____ .
7. ☒ Examiner's Amendment/Comment
8. ☐ Examiner's Statement of Reasons for Allowance
9. ☒ Other *312*.

BRIAN P. YENKE
Primary Examiner
Art Unit: 2622

EXAMINER'S AMENDMENT

1. An examiner's amendment to the record appears below. Should the changes and/or additions be unacceptable to applicant, an amendment may be filed as provided by 37 CFR 1.312. To ensure consideration of such an amendment, it MUST be submitted no later than the payment of the issue fee.

The application has been amended as follows: Claims 11-18, 29-32,39-42, 49-52,59-62 and 70-73 should all be reentered (they were previously withdrawn).

Claims 11-18, 29-32,39-42, 49-52,59-62 and 70-73 were withdrawn (without traverse) from an election/restriction requirement and thus should now be entered based upon the allowance of the elected claims.

Conclusion

2. Any inquiry concerning this communication or earlier communications from the examiner should be directed to Brian Yenke whose telephone number is (571)272-7359. The examiner work schedule is Monday-Thursday, 0730-1830 hrs.

If attempts to reach the examiner by telephone are unsuccessful, the examiner's Supervisor, David L. Ometz, can be reached at (571)272-7593.

Any response to this action should be mailed to:

Commissioner of Patents and Trademarks

Washington, D.C. 20231

or faxed to:

(571)-273-8300

Any inquiry of a general nature or relating to the status of this application or proceeding should be directed to the Technology Center 2600 Customer Service Office whose telephone number is (703)305-HELP.

General information about patents, trademarks, products and services offered by the United States Patent and Trademark Office (USPTO), and other related information is available by contacting the USPTO's General Information Services Division at:

800-PTO-9199 or 703-308-HELP

(FAX) 703-305-7786

(TDD) 703-305-7785

An automated message system is available 7 days a week, 24 hours a day providing informational responses to frequently asked questions and the ability to order certain documents. Customer service representatives are available to answer questions, send materials or connect customers with other offices of the USPTO from 8:30 a.m. - 8:00p.m. EST/EDT, Monday-Friday excluding federal holidays.

For other technical patent information needs, the Patent Assistance Center can be reached through customer service representatives at the above numbers, Monday through Friday (except federal holidays) from 8:30 a.m. to 5:00 p.m. EST/EDT.

The Patent Electronic Business Center (EBC) allows USPTO customers to retrieve data, check the status of pending actions, and submit information and applications. The tools currently available in the Patent EBC are Patent Application Information Retrieval (PAIR) and the Electronic Filing System (EFS). PAIR (http://pair.uspto.gov) provides customers direct secure access to their own patent application status information, as well as to general patent information publicly available. EFS allows customers to electronically file patent application documents securely via the Internet. EFS is a system for submitting new utility patent applications and pre-grant publication submissions in electronic publication-ready form. EFS includes software to help customers prepare submissions in extensible Markup Language (XML) format and to assemble the various parts of the application as an electronic submission package. EFS also allows the submission of Computer Readable Format (CRF) sequence listings for pending biotechnology patent applications, which were filed in paper form.

B.P.Y
20 November 2007

BRIAN P. YENKE
PRIMARY EXAMINER

Response to Rule 312 Communication	Application No.	Applicant(s)	
	10/388,688	PATE ET AL.	
	Examiner	Art Unit	
	BRIAN P. YENKE	2622	

-- The MAILING DATE of this communication appears on the cover sheet with the correspondence address --

1. ☒ The amendment filed on *30 October 2007* under 37 CFR 1.312 has been considered, and has been:

a) ☒ entered.

b) ☐ entered as directed to matters of form not affecting the scope of the invention.

c) ☐ disapproved because the amendment was filed after the payment of the issue fee.
Any amendment filed after the date the issue fee is paid must be accompanied by a petition under 37 CFR 1.313(c)(1) and the required fee to withdraw the application from issue.

d) ☐ disapproved. See explanation below.

e) ☐ entered in part. See explanation below.

BRIAN P. YENKE
Primary Examiner
Art Unit: 2622

174

UNITED STATES PATENT AND TRADEMARK OFFICE

COMMISSIONER FOR PATENTS
UNITED STATES PATENT AND TRADEMARK OFFICE
P.O. BOX 1450
ALEXANDRIA, VA 22313-1450
www.uspto.gov

SANDRA P. THOMPSON
RIORDAN & MCKINZIE
600 ANTON BLVD., 18TH FLOOR
COSTA MESA, CA 92626

COPY MAILED

JAN 30 2004

OFFICE OF PETITIONS

In re Application of
Shyama Mukherjee et al
Application No. 10/388,695
Filed: March 13, 2003
Attorney Docket No. 7210114001-3221000

ON PETITION

This is in response to the petition under 37 CFR 1.47(a), filed December 5, 2003.

The petition is dismissed.

Rule 47 applicant is given TWO MONTHS from the mailing date of this decision to reply, correcting the below-noted deficiencies. Any reply should be entitled "Request for Reconsideration of Petition Under 37 CFR 1.47(a)," and should only address the deficiencies noted below, except that the reply may include an oath or declaration executed by the non-signing inventor. **FAILURE TO RESPOND WILL RESULT IN ABANDONMENT OF THE APPLICATION.** Any extensions of time will be governed by 37 CFR 1.136(a).

A grantable petition under 37 CFR 1.47(a) requires: (1) proof that the non-signing inventor cannot be reached or refuses to sign the oath or declaration after having been presented with the application papers (specification, claims and drawings); (2) an acceptable oath or declaration in compliance with 35 U.S.C. §§ 115 and 116; (3) the petition fee; and (4) a statement of the last known address of the non-signing inventor. Applicant lacks item (1).

As to item (1), rule 47 applicants must demonstrate with documented evidence that the inventor refuses to join in the application after having been presented with the application papers (specification, claims, drawings and oath or declaration). There is no indication in the present case whether joint inventor Shyama Mukherjee was ever presented with a copy of the complete application papers for the instant nonprovisional application. The fact that an application may contain proprietary information does not relieve the 37 CFR 1.47 applicant of the responsibility to present the application papers to the inventor if the inventor is willing to receive the papers. If the non-signing inventor was not presented with a copy of the application papers for the instant nonprovisional application, then he could not attest that he had "reviewed and understands the application papers" and could not execute the declaration which was requested for inventor Mukherjee to sign. Did joint inventor Shyama Mukherjee receive a copy of the application papers? Before a refusal can be alleged, it must be demonstrated that a *bona fide* attempt was made to present a copy of the application papers to the non-signing inventor for signature. Unless petitioner can show that a copy of the application papers was presented to the non-signing inventor or that the non-signing inventors refused to accept delivery of the papers or expressly stated that the application papers should not be sent, then petitioner will have to mail a copy of the complete application papers (specification, claims and drawings) to the non-signing inventors' last known address, return receipt requested. A cover letter of instructions should accompany the mailing of the application papers setting a deadline or a statement that no response will constitute a refusal. This sort of ultimatum lends support to a finding of refusal by conduct. **The proof of the pertinent events should be made by a statement of someone with firsthand knowledge of the events and should include documentary evidence, such as certified mail return receipt, cover letter of instructions, telegram, etc.** See MPEP 409.03(d).

The statements of facts must be signed, where at all possible, by a person having firsthand knowledge of the facts recited therein. If the inventor orally refuses to join in the application, that fact along with the time and place of the refusal must be stated in the affidavit or declaration. If, on the other hand, petitioner receives an express written refusal, a copy of the document evidencing that refusal must be made part of the affidavit or declaration.

When it is concluded by the rule 47 petitioner that the omitted inventor's conduct constitutes a refusal, all facts upon which that conclusion is based should be stated in an affidavit or declaration. If there is documentary evidence to support facts alleged in the affidavit or declaration, such evidence must be submitted.

Whenever the omitted inventor gives a reason for refusing to sign the application oath or declaration, that reason should be stated in the affidavit or declaration.

In order to expedite consideration of the petition under 37 CFR 1.47(a), petitioner may wish to submit the renewed petition by facsimile transmission to the telephone number indicated below and to the attention of Irvin Dingle.

Further correspondence with respect to this matter should be addressed as follows:

By mail: Mail Stop PETITION
Commissioner for Patents
Post Office Box 1450
Alexandria, VA 22313-1450

Effective December 1, 2003, the Office of Petitions can no longer receive hand-carried correspondence, or facsimile transmissions of correspondence. The centralized location for hand-carried correspondence is the Customer Window located at:

2011 South Clark Place
Crystal Plaza Two, Lobby
Arlington, VA 22202

The centralized facsimile number is **(703) 872-9306.**

Telephone inquiries related to this decision should be directed to Irvin Dingle at (703) 306-5684.

Frances Hicks

Frances Hicks
Lead Petitions Examiner
Office of Petitions
Office of the Deputy Commissioner
for Patent Examination Policy

UNITED STATES PATENT AND TRADEMARK OFFICE

COMMISSIONER FOR PATENTS
UNITED STATES PATENT AND TRADEMARK OFFICE
P.O. BOX 1450
ALEXANDRIA, VA 22313-1450
www.uspto.gov

SANDRA P. THOMPSON
RIORDAN & MCKINZIE
600 ANTON BLVD., 18TH FLOOR
COSTA MESA, CA 92626

COPY MAILED

MAY 19 2004

OFFICE OF PETITIONS

In re Application of	:	
Shyama Mukherjee et al.	:	
Application No. 10/388,695	:	DECISION GRANTING
Filed: March 13, 2003	:	STATUS UNDER 37 CFR 1.47(a)
Attorney Docket No. 7210114001-3221000	:	

This is in response to the petition filed April 9, 2004, requesting reconsideration of a decision mailed January 30, 2004, which refused to accord 37 CFR 1.47(a) status to the above-identified application.

The petition is granted.

Petitioner has shown that the non-signing inventor has refused to join in the filing of the above-identified application.

The above-identified application and papers have been reviewed and found in compliance with CFR 1.47(a). This application is hereby accorded Rule 1.47(a) status. As provided in Rule 1.47(c), this office will forward notice of this application's filing to the non-signing inventor at the address given in the petition. Notice of the filing of this application will also be published in the Official Gazette.

Telephone inquiries related to this decision should be directed to Irvin Dingle at (703) 306-5684.

Frances Hicks

Frances Hicks
Lead Petitions Examiner
Office of Petitions
Office of the Deputy Commissioner
for Patent Examination Policy

UNITED STATES PATENT AND TRADEMARK OFFICE

Commissioner for Patents
United States Patent and Trademark Office
P.O. Box 1450
Alexandria, VA 22313-1450
www.uspto.gov

Shyama Mukherjee
2470 Pinto Court
Morgan Hill, CA 95037

COPY MAILED
MAY 19 2004
OFFICE OF PETITIONS

In re Application of
Shyama Mukherjee; Roger Leung; Kreisler Lau
Application No. 10/388,695
Filed: March 13, 2003
For: LOW DIELECTRIC MATERIALS AND METHODS OF PRODUCING SAME

Dear Inventor Mukherjee:

You are named as a joint inventor in the above identified United States patent application, filed under the provisions of 35 U.S.C. 116 (United States Code), and 37 CFR 1.47(a), Rules of Practice in Patent Cases. Should a patent be granted on the application you will be designated therein as a joint inventor.

As a named inventor you are entitled to inspect any paper in the file wrapper of the application, order copies of all or any part thereof (at a prepaid cost per 37 CFR 1.19) or make your position of record in the application. Alternatively, you may arrange to do any of the preceding through a registered patent attorney or agent presenting written authorization from you. If you care to join in the application, counsel of record (see below) would presumably assist you. Joining in the application would entail the filing of an appropriate oath or declaration by you pursuant to 37 CFR 1.63.

Telephone inquiries regarding this communication should be directed to the Irvin Dingle at (703) 306-5684. Requests for information regarding your application should be directed to the File Information Unit at (703) 308-2733. Information regarding how to pay for and order a copy of the application, or a specific paper in the application, should be directed to Certification Division at (703) 308-9726 or 1 (800) 972-6382 (outside the Washington D.C. area).

Frances Hicks
Lead Petitions Examiner
Office of Petitions
Office of the Deputy Commissioner
for Patent Examination Policy

cc:

Sandra P. Thompson
Riordan & Mckinzie
600 Anton Blvd., 18th Floor
Costa Mesa, CA 92626

UNITED STATES PATENT AND TRADEMARK OFFICE

Commissioner for Patents
United States Patent and Trademark Office
P.O. Box 1450
Alexandria, VA 22313-1450
www.uspto.gov

Shyama Mukherjee
112 N. Fern Abbey
Cary, NC 95037

COPY MAILED
MAY 19 2004
OFFICE OF PETITIONS

In re Application of
Shyama Mukherjee; Roger Leung; Kreisler Lau
Application No. 10/388,695
Filed: March 13, 2003
For: LOW DIELECTRIC MATERIALS AND METHODS OF PRODUCING SAME

Dear Inventor Mukherjee:

You are named as a joint inventor in the above identified United States patent application, filed under the provisions of 35 U.S.C. 116 (United States Code), and 37 CFR 1.47(a), Rules of Practice in Patent Cases. Should a patent be granted on the application you will be designated therein as a joint inventor.

As a named inventor you are entitled to inspect any paper in the file wrapper of the application, order copies of all or any part thereof (at a prepaid cost per 37 CFR 1.19) or make your position of record in the application. Alternatively, you may arrange to do any of the preceding through a registered patent attorney or agent presenting written authorization from you. If you care to join in the application, counsel of record (see below) would presumably assist you. Joining in the application would entail the filing of an appropriate oath or declaration by you pursuant to 37 CFR 1.63.

Telephone inquiries regarding this communication should be directed to the Irvin Dingle at (703) 306-5684. Requests for information regarding your application should be directed to the File Information Unit at (703) 308-2733. Information regarding how to pay for and order a copy of the application, or a specific paper in the application, should be directed to Certification Division at (703) 308-9726 or 1 (800) 972-6382 (outside the Washington D.C. area).

Frances Hicks
Lead Petitions Examiner
Office of Petitions
Office of the Deputy Commissioner
for Patent Examination Policy

cc:

Sandra P. Thompson
Riordan & Mckinzie
600 Anton Blvd., 18th Floor
Costa Mesa, CA 92626

UNITED STATES PATENT AND TRADEMARK OFFICE

Commissioner for Patents
United States Patent and Trademark Office
P.O. Box 1450
Alexandria, VA 22313-1450
www.uspto.gov

Paper No. 10

McKee Voorhees & Sease, PLC
801 Grand Avenue
Suite 3200
Des Moines, IA 50309-2721

COPY MAILED

SEP 30 2003

OFFICE OF PETITIONS

In re Application of	:	
Rothschild et al.	:	DECISION ON
Application No. 10/388,703	:	PETITION
Filed: March 14, 2003	:	
Attorney Docket No. P05586US1	:	

This is a decision on the petition filed July 17, 2003, requesting that the above-identified application be accorded a filing date of March 15, 2003, with 6 sheets of drawings (Figures 1-6) as a part of the original disclosure.

On March 14, 2003, applicants deposited the above-identified application. However, on May 28, 2003, the Office of Initial Patent Examination mailed a "Notice Of Incomplete Application," requiring drawings of applicants' invention and stating that the filing date would be the date of receipt of the omitted drawings. Additionally, the Notice stated that the oath or declaration was missing.

Applicants request that the above-identified application be accorded the filing date of application Serial No. 60/364,959, filed March 15, 2002, which was incorporated by reference in its entirety by the Application Data Sheets Priority Information submitted on filing. The argument and evidence supplied with the petition have been carefully considered, but are not persuasive. A review of the ADS states that a "parent application," No. 60/364,959 was filed on March 15, 2002. There is no indication that applicants specifically stated that application No. 60/364,959 was incorporated by reference. The mere reference to another application is not an incorporation of anything therein into the application containing the reference. See In re Seversky, 177 USPQ 144, 146 (C.C.P.A. 1973) and Dart Industries, Inc. v. Banner, 207 USPQ 273, 276 (D.C. Cir. 1980). See also, Advance Display Systems Inc. v. Kent State University,

54 USPQ2d 1673 (Fed. Cir. 2000) ("To incorporate material by reference, the host document must identify with detailed particularity what specific material it incorporates and clearly indicate where that material is found in the various documents.")

Furthermore, it is noted that the application transmittal letter deposited on March 14, 2003, includes a box 5 used to incorporate the entire disclosure of a prior application into the disclosure of the application being filed. Unfortunately, applicants failed to check box 5 on the transmittal letter.

As stated in MPEP § 601.01(f), it is the practice of the Office to treat an application that contains at least one process or method claim as an application for which a drawing is <u>not</u> necessary for an understanding of the invention under 35 U.S.C. 113 (first sentence).

MPEP § 601.01(f) also states that:

> A nonprovisional application having at least one claim, or a provisional application having at least some disclosure, directed to the subject matter discussed above for which a drawing is usually not considered essential for a filing date, describing drawing figure(s) in the specification, but filed without drawings will be treated as an application filed without all of the drawing figures referred to in the specification as discussed in MPEP § 601.01(g), so long as the application contains something that can be construed as a written description and the names of all the inventors.

This application contains method claims. Therefore, the application should have been treated as an application filed without all of the drawing figures referred to in the specification as discussed in MPEP § 601.01(g).

MPEP § 601.01(g) states that if an application is filed without all of the drawing figure(s) referred to in the specification, a "Notice of Omitted Item(s)" is mailed indicating that the application has been accorded a filing date, but is lacking some of the figures of drawings described in the specification.

In view of the above, the requirement for drawings set forth in the "Notice of Incomplete Application" mailed May 28, 2003, was an error and the requirement is hereby withdrawn. The application is accorded a filing date of March 14, 2003.

The petition is granted to the extent that the application will be accorded the filing date of March 14, 2003, without the 6 sheets of drawings containing Figures 1-6 as a part of the original disclosure of this application.

Any request to accord the application the later filing date of July 17, 2003, with the 6 sheets of drawings as part of the original disclosure is by way of petition under 37 CFR 1.182. Any such petition must be filed with the $130.00 petition fee within **TWO (2) MONTHS** of the date of this decision to be considered timely under 37 CFR 1.181(f).

The $130.00 petition fee will be refunded to Deposit Account No. 26-0084.

The application file is being returned to the Office of Initial Patent Examination for further processing with the filing date of March 14, 2003, and an indication in the Office records that "0" sheets of drawings were present on filing.

Any inquiries related to this decision should be directed to the undersigned at (703) 306-5589.

Christina Tartera Donnell

Christina Tartera Donnell
Senior Petitions Attorney
Office of Petitions

UNITED STATES PATENT AND TRADEMARK OFFICE

COMMISSIONER FOR PATENTS
UNITED STATES PATENT AND TRADEMARK OFFICE
P.O. BOX 1450
ALEXANDRIA, VA 22313-1450
www.uspto.gov

MCKEE, VOORHEES & SEASE, P.L.C.
801 GRAND AVENUE
SUITE 3200
DES MOINES IA 50309-2721

COPY MAILED

MAR 19 2007

OFFICE OF PETITIONS

In re Application of	:
Rothschild, et. al	: DECISION ON PETITION
Application No. 10/388,703	:
Filed: March 14, 2003	:
Docket No.: P05586US1	:

This is a decision on the petition under 37 C.F.R. § 1.137(b), filed February 2, 2007.

The petition is hereby **GRANTED**.

This application became abandoned November 18, 2006 for failure to timely submit a proper reply to the Notice of Allowability (Notice) mailed August 17, 2006. Notice of Abandonment was mailed January 23, 2007.

A grantable petition pursuant to 37 C.F.R. § 1.137(b) must be accompanied by: (1) the required reply to the outstanding Office action or notice, unless previously filed; (2) the petition fee as set forth in 37 C.F.R. § 1.17(m); (3) a statement that the entire delay in filing the required reply from the due date for the reply until the filing of a grantable petition pursuant to 37 C.F.R. § 1.137(b) was unintentional; and (4)any terminal disclaimer (and fee set forth in 37 C.F.R. § 1.20(d)) required pursuant to 37 C.F.R. § 1.137(c).

The instant petition has been reviewed and found in compliance with the provisions of 37 C.F.R. § 1.137(b). Accordingly, the failure to timely submit a proper reply to the Notice is accepted as having been unintentionally delayed.

This application will be forwarded to Technology Center 1600 for consideration of the Rule 312 amendment submitted herewith.

Telephone inquiries concerning this matter may be directed to the undersigned at (571) 272-3205.

Alesia M. Brown
Petitions Attorney
Office of Petitions

UNITED STATES PATENT AND TRADEMARK OFFICE

Commissioner for Patents
United States Patent and Trademark Office
P.O. Box 1450
Alexandria, VA 22313-1450
www.uspto.gov

JJGJR.: 06-05

Paper No: __

LOWELL W. GRESHAM
MESCHKOW & GRESHAM, PLC
SUITE 409
5727 NORTH SEVENTH STREET
PHOENIX AZ 85014

COPY MAILED

JUN 17 2005

OFFICE OF PETITIONS

In re Application of	:	
Sternberg, et al.	:	
Application No. 10/388,706	:	DECISION ON PETITION
Filing Date: 13 March, 2003	:	
Attorney Docket No. 22560010DIV	:	

This is a decision on the petition filed on 3 September, 2004, alleging unintentional delay under 37 C.F.R. §1.137(b).

The Office regrets the delay in addressing this matter.

The petition under 37 C.F.R. §1.137(b) is **GRANTED**.

BACKGROUND

The record indicates:

- Petitioner failed to reply timely and properly to the Notice to File Corrected Application Papers (as to the drawings) mailed on 11 June, 2003, with reply due on or before Monday, 11 August, 2003;

- the application went abandoned after midnight 11 August, 2003;

- the Office mailed the Notice of Abandonment on 25 August, 2004;
- the instant petition (with fee) was filed on 3 September, 2004, and included therewith the reply in the form of the drawings.

STATUTES, REGULATIONS AND ANALYSIS

Congress has authorized the Commissioner to "revive an application if the delay is shown to the satisfaction of the Commissioner to have been "unavoidable." 35 U.S.C. §133 (1994).[1]

The regulations at 37 C.F.R. §1.137(a) and (b) set forth the requirements for a petitioner to revive a previously unavoidably or unintentionally, respectively, abandoned application under this congressional grant of authority. The language of 35 U.S.C. §133 and 37 C.F.R. §1.137(a) is clear, unambiguous, and without qualification: the delay in tendering the reply to the outstanding Office action, as well as filing the first petition seeking revival, must have been unavoidable for the reply now to be accepted on petition.[2]

Delays in responding properly raise the question whether delays are unavoidable.[3] Where there is a question whether the delay was unavoidable, Petitioners must meet the burden of establishing that the delay was unavoidable within the meaning of 35 U.S.C. §133 and 37 C.F.R. §1.137(a).[4] And the Petitioner must be diligent in attending to the matter.[5] Failure to do so does not constitute the care required under Pratt, and so cannot satisfy the test for diligence and due care.

(By contrast, unintentional delays are those that do not satisfy the very strict statutory and regulatory requirements of unavoidable delay, and also, by definition, are not intentional.[6]))

---

[1] 35 U.S.C. §133 provides:
35 U.S.C. §133 Time for prosecuting application.
Upon failure of the applicant to prosecute the application within six months after any action therein, of which notice has been given or mailed to the applicant, or within such shorter time, not less than thirty days, as fixed by the Commissioner in such action, the application shall be regarded as abandoned by the parties thereto, unless it be shown to the satisfaction of the Commissioner that such delay was unavoidable.

[2] Therefore, by example, an unavoidable delay in the payment of the Filing Fee might occur if a reply is shipped by the US Postal Service, but due to catastrophic accident, the delivery is not made.

[3] See: *Changes to Patent Practice and Procedure*; *Final Rule Notice*, 62 *Fed. Reg.* at 53158-59 (October 10, 1997), 1203 *Off. Gaz. Pat. Office* at 86-87 (October 21, 1997).

[4] See: In re Application of G, 11 USPQ2d 1378, 1380 (Comm'r Pats. 1989).

[5] See: Diligence in Filing Petitions to Revive and Petitions to Withdraw the Holding of Abandonment, 1124 Off. Gaz. Pat. Office 33 (March 19, 1991). It was and is Petitioner's burden to exercise diligence in seeking either to have the holding of abandonment withdrawn or the application revived. See 1124 Off. Gaz. Pat. Office supra.

[6] Therefore, by example, an unintentional delay in the reply might occur if the reply and transmittal form are to be prepared for shipment by the US Postal Service, but other pressing matters distract one's attention and the mail is not timely deposited for shipment.

The requirements for a grantable petition under 37 C.F.R. §1.137(b) are the petition and fee, a showing of unintentional delay, a proper reply, and–where appropriate--a terminal disclaimer and fee.

Petitioner has satisfied the petition, fee, reply and statement/showing requirements of the regulation.

CONCLUSION

The instant petition under 37 C.F.R. §1.137(b) hereby is **granted**.

The instant application is released to OIPE for further processing as necessary before being forwarded for examination.

Telephone inquiries concerning this decision may be directed to the undersigned at (571) 272-3214.

John J. Gillon, Jr.
Senior Attorney
Office of Petitions

SPE RESPONSE FOR CERTIFICATE OF CORRECTION

DATE : 10/20/08

Paper No.: _____

TO SPE OF : ART UNIT 2622

SUBJECT : Request for Certificate of Correction for Appl. No.: 10388720 Patent No.: 7391475

Please respond to this request for a certificate of correction within 7 days.

FOR IFW FILES:

Please review the requested changes/corrections as shown in the **COCIN** document(s) in the IFW application image. No new matter should be introduced, nor should the scope or meaning of the claims be changed.

Please complete the response (see below) and forward the completed response to scanning using document code **COCX**.

FOR PAPER FILES:

Please review the requested changes/corrections as shown in the attached certificate of correction. Please complete this form (see below) and forward it with the file to:

Certificates of Correction Branch (CofC)
South Tower - 9A22
Palm Location 7580

Valerie Jackson
Certificates of Correction Branch
703-308-9390 ext. 114

Thank You For Your Assistance

The request for issuing the above-identified correction(s) is hereby:
Note your decision on the appropriate box.

- [X] **Approved** — **All** changes apply.
- [ ] **Approved in Part** — Specify below which changes **do not** apply.
- [ ] **Denied** — State the reasons for denial below.

Comments: _____

SPE

2622
Art Unit

PTOL-306 (REV. 7/03)

U.S. DEPARTMENT OF COMMERCE Patent and Trademark Office

UNITED STATES PATENT AND TRADEMARK OFFICE

Commissioner for Patents
United States Patent and Trademark Office
P.O. Box 1450
Alexandria, VA 22313-1450
www.uspto.

Richard Jaworski
Cooper & Dunham LLP
1185 Avenue of the Americas
New York, NY 10036

MAILED

APR 2 4 2007

Technology Center 2100

In re Application of:
Donald Elgressy et al
Application No. 10/388,727
Filed: March 14, 2003
For: Method and System for Enforcing a Communications Security Policy

DECISION ON PETITION UNDER 37 C.F.R. § 1.181 TO WITHDRAW HOLDING OF ABANDONMENT

This is a decision on the petition filed September 21, 2005 under 37 CFR § 1.181 requesting the withdrawal of the holding of abandonment of the above-identified application.

This application was held abandoned for failure to timely file a proper reply to the final rejection mailed on September 21, 2004. A Notice of Abandonment was mailed on July 28, 2005.

In support of the petition, petitioner stated that a Notice of Appeal was filed March 21, 2005 with a 3-month extension of time. As the Notice of Appeal starts a new statutory period of 2 months extended up to a total of 6 months the application was not abandoned on July 28, 2005 as indicated on the notice of abandonment and should not have been held abandoned until at least September 21, 2005. On September 21, 2005 a 4-month extension of time along with a Request for Continue Examination was filed.

A review of the file reveals that the above statements from petitioner are correct and the application was abandoned improperly.

For the above stated reasons, the petition is **GRANTED**. The Notice of Abandonment mailed on July 28, 2005 is hereby withdrawn. The Request for Continue Examination of September 21, 2005 is hereby entered.

The application file is being forwarded to an examiner to issue an appropriate Office.

Tod Swann
Quality Assurance Specialist
Technology Center 2100
Computer Architecture, Software, and Information Security

SPE RESPONSE FOR CERTIFICATE OF CORRECTION

Paper No.: _____

DATE : Sep. 7, 2006

TO SPE OF : ART UNIT 3738 (S.P.E. Corrine Mc Dermott)

SUBJECT : Request for Certificate of Correction for Appl. No.: 10/388741 Patent No.: 7083643

Please respond to this request for a certificate of correction within 7 days.

Please review the requested changes/corrections as shown in the **COCIN** document(s) in the IFW application image. No new matter should be introduced, nor should the scope or meaning of the claims be changed.

Please complete the response (see below) and forward the completed response to scanning using document code **COCX**.

STAY POWELL

Certificates of Correction Branch

703-308-9390 ext. 120

Thank You For Your Assistance

The request for issuing the above-identified correction(s) is hereby:

Note your decision on the appropriate box.

- ☐ **Approved** — **All** changes apply.
- ☐ **Approved in Part** — **Specify below** which changes **do not** apply.
- ☒ **Denied** — State the reasons for denial below.

Comments: Change is not necessary. ~~[illegible]~~ ~~[illegible]~~ What is asked to be deleted is standard practice in the Office

Corrine McDermott — SPE

3738 — Art Unit

UNITED STATES PATENT AND TRADEMARK OFFICE

Commissioner for Patents
United States Patent and Trademark Office
P.O. Box 1450
Alexandria, VA 22313-1450
www.uspto.gov

Date : September 26, 2006

Patent No. : 7,083,643
Inventor(s) : Whalen et al.
Issued : Aug. 1, 2006
For : METHODS FOR TREATING ANEURYSMS

Re: Request for Certificate of Correction

Consideration has been given your request for the issuance of a certificate of correction for the above-identified patent under the provisions of Rule 1.322.

Respecting the alleged error(s) in Item (56), References Cited, after review of the application by Supervisory Patent Examiner, the following comments were cited in the response, "Change is not necessary. What is asked to be deleted is standard practice in the Office". Therefore, being no fault of the Patent and Trademark Office, no correction(s) is/are in order here under United States Codes (U.S.C.) 254 or 255 and the Code of Federal Regulation (C.F.R.) 1.322 or 1.323).

In view of the foregoing, your request in this matter is hereby denied.

Note: This is a general hint, which may decrease the processing time of your request.
Certificate of Corrections are issued to correct errors of minor nature, i.e. typographical, spelling or grammar errors, errors not considered "critical information"; which are correctable under the provisions of 1.322a; or applicant's errors correctable under the provisions of 1.323. *If you obtain data that clearly shows the attorney/applicant is not in error, simply include supportive documentation and associated post card receipts, along with your certificate of correction or reconsideration via postal mail, not by fax. If you do not have supportive documentation that clearly shows the attorney/applicant is not in error and verifies that the PTO is in error regarding the matter in your request - then, the appropriate fee of $100.00 with your "Certificate of Correction" or "Reconsideration Certificate of Correction" - will be necessary. Without supportive documentation, depending upon the matter in your request, it is possible - that in addition, a petition with its appropriate fee of $130.00 may be necessary, or the request may be denied. Please be advised that – "identification of the exact point of error by reference to column and line number of the printed patent" provides clarity for processing a request. Please see the MPEP for further instruction and understanding.*

Stacy Powell, Sr.
For Cecelia B. Newman, Supervisor
Decisions & Certificates of
Correction Branch
(703) 308 – 9390 or (703) 305 – 8309

FOLEY & LARDNER LLP
1530 Page Mill Road
Palo Alto, California 94304-1125

CBN/spsr

UNITED STATES DEPARTMENT OF COMMERCE
Patent and Trademark Office
ASSISTANT SECRETARY OF COMMERCE AND
COMMISSIONER OF PATENTS AND TRADEMARKS
Washington, DC 20231

1/10/08

Patent No. :7083643
Inventor(s) : Whalen et al.
Issued : 8/1/2006
Title : METHODS FOR TREATING ANEURYSMS
Atty.doc./File No.

Request for Certificates of Correction

Consideration has been given to your request for the issuance of a Certificate of Correction, for the above – identified patent under the provisions of CFR 1.322.

Inspection of the application for the patent reveals that item [56] is printed in accordance with the record. Therefore being no fault on the Patent and Trademark Office, It has no authority to issue a certificate of correction under the provision of 1.322.

In view of the forgoing, your request in this matter, is hereby denied.

Future written correspondence concerning this matter should be filed and directed to Decisions & Certificates of Correction Branch.

Henry Randall
Cecelia Newman
Decisions & Certificates
of Correction Branch
(703) 308-9390 Ext. 108

Foley & Lardner LLP
1530 Page Mill Road
Palo Alto, California 94304-1125

HR/CBN

UNITED STATES PATENT AND TRADEMARK OFFICE

Commissioner for Patents
United States Patent and Trademark Office
P.O. Box 1450
Alexandria, VA 22313-1450
www.uspto.gov

TED M. ANTHONY
PERRET DOISE
Suite 1200
600 Jefferson Street
Lafayette LA 70501

COPY MAILED

APR 1 0 2006

OFFICE OF PETITIONS

In re Application of
Victor Joseph SEGURA
Application No. 10/388,781
Filed: March 14, 2003
Attorney Docket No. N/A

ON PETITION

This is a decision on petition under 37 CFR 1.137(b), filed on December 22, 2005, to revive the above-identified application.

The petition is **GRANTED**.

The application became abandoned for failure to reply in a timely manner to the Notice of Non-Compliant Amendment mailed on February 24, 2005, which set a shortened statutory period for reply of one (1) month. No extension(s) of time under the provisions of 37 CFR 1.136(a) were obtained. Petitioner has filed a reply to the aforementioned Notice on March 28, 2005 (with the Certificate of Mailing date of March 24, 2005), however did not submit the $100 fee for one (1) independent claim in excess of three (3), thus rendering said reply incomplete. Accordingly, the application became abandoned, by operation of law, on March 25, 2005. A Notice of Abandonment was mailed on October 6, 2005.

The petition satisfies the conditions for revival pursuant to the provisions of 37 CFR 1.137(b) in that (1) a reply in the form of the argument and amendment under 37 CFR 1.111; (2) the petition fee of $750; and (3) the required statement of unintentional delay have been received. Petitioner has also submitted the aforementioned $100 fee for one (1) independent claim in excess of three (3). Accordingly, the reply to the Notice of Non-Compliant Amendment mailed of February 24, 2005 is accepted as having been unintentionally delayed.

The file does not indicate a change of address has been submitted, although the address given on the petition differs from the address of record. If appropriate, a change of address should be filed in

accordance with MPEP 601.03. A courtesy copy of this decision is being mailed to the address given on the petition; however, the Office will mail all future correspondence solely to the address of record.

Telephone inquiries concerning this decision should be directed to Anatoly Vortman at (571) 272-6051, or in his absence to the undersigned at (571)272-7099.

The application file is being referred to Technology Center AU 3652 for an appropriate action on the amendment of March 28, 2005.

David Bucci
Petitions Examiner
Office of Petitions

Cc: TED M. ANTHONY
600 Jefferson Street, Suite 1600
Lafayette LA 70501

UNITED STATES PATENT AND TRADEMARK OFFICE

COMMISSIONER FOR PATENTS
UNITED STATES PATENT AND TRADEMARK OFFICE
P.O. BOX 1450
ALEXANDRIA, VA 22313-1450
WWW.USPTO.GOV

Paper No. 4

COPY MAILED

JUN 23 2003

OFFICE OF PETITIONS

KNOBBE MARTENS OLSON & BEAR LLP
2040 MAIN STREET
FOURTEENTH FLOOR
IRVINE CA 92614

In re Application of
Doyle, et al.
Application No. 10/388,795
Filed: March 12, 2003
Attorney Docket No. TIVAMD.003C1
For: HAND-ACTUATED ARTICULATING SURGICAL TOOL

: DECISION GRANTING
: PETITION

This is a decision on the petition under 37 CFR 1.10(c), filed June 9, 2003 (certificate of mailing date June 5, 2003), requesting that the above-identified application be accorded a filing date of March 12, 2003 rather than the presently accorded filing date of March 13, 2003.

Petitioners request the earlier filing date on the basis that the application was deposited in Express Mail service of the United States Postal Service (USPS) on March 12, 2003, pursuant to the requirements of 37 CFR 1.10. The petition is accompanied by a copy of Express Mail label no. EV230176315US showing a "date-in" of 3/13/03 **and** a USPS date stamp of MAR 12 2003. The same Express Mail label number is listed on the original certificate of mailing by Express Mail found in the application file.

The evidence presented establishes that the Express Mail package associated with Express Mail label no. EV230176315US was deposited with the USPS on March 12, 2003.

Accordingly, the petition is granted.

No fee has been or will be charged in connection with this petition.

The application is being returned to the Office of Initial Patent Examination for correction of the filing date to **March 12, 2003**.

Any inquiries related to this decision should be directed to the undersigned at (703) 308-6712.

E. Shirene Willis
Senior Petitions Attorney
Office of Petitions

UNITED STATES PATENT AND TRADEMARK OFFICE

UNITED STATES DEPARTMENT OF COMMERCE
United States Patent and Trademark Office
Address: COMMISSIONER FOR PATENTS
P.O. Box 1450
Alexandria, Virginia 22313-1450
www.uspto.gov

SHUMAKER & SIEFFERT, P. A.
1625 RADIO DRIVE
SUITE 300
WOODBURY, MN 55125

Mail Date: 05/12/2010

Applicant	: Ruth E. Bauhahn	: DECISION ON REQUEST FOR
Patent Number	: 7647116	: RECALCULATION of PATENT
Issue Date	: 01/12/2010	: TERM ADJUSTMENT IN VIEW
Application No	: 10/388,798	: OF WYETH AND NOTICE OF INTENT TO
Filed	: 03/13/2003	: ISSUE CERTIFICATE OF CORRECTION
		:

The Request for Recalculation is **GRANTED** to the extent indicated.

The patent term adjustment has been determined to be **1404** days. The USPTO will *sua sponte* issue a certificate of correction reflecting the amount of PTA days determined by the recalculation.

Prior to the issuance of the certificate of correction, the USPTO will afford patentee an opportunity to be heard and request reconsideration. Accordingly, patentee has **one month or thirty (30) days**, whichever is longer, to file a request for reconsideration of this patent term adjustment calculation. See 35 U.S.C. 154(b)(3)(B)(ii) and 37 CFR 1.322(a)(4). No extensions of time will be granted under 37 CFR 1.136.

Patentee should use document code PET.OP if electronically filing a request for reconsideration of this patent term adjustment calculation. The patentee must also include the information required by 37 CFR 1.705(b)(2) and the fee required by 37 CFR 1.18(e). If patentee does not file a timely request for reconsideration of this patent term adjustment calculation including the information required by 37 CFR 1.705(b)(2) and the fee required by 37 CFR 1.18(e), the USPTO will issue a certificate of correction reflecting the PTA determination noted above.

Patentee should be aware that in order to preserve the right to review in the United States District Court for the District of Columbia of the USPTO patent term adjustment determination, patentee must ensure that he or she also take the steps required under 35 U.S.C. 154(b)(4)(A) in a timely manner. Nothing in the request for recalculation should be construed as providing an alternative time frame for commencing a civil action under 35 U.S.C. 154(b)(4)(A).

Any questions concerning this decision should be directed to the Office of Patent Legal Administration at 571-272-7702.

UNITED STATES PATENT AND TRADEMARK OFFICE

COMMISSIONER FOR PATENTS
UNITED STATES PATENT AND TRADEMARK OFFICE
P.O. BOX 1450
ALEXANDRIA, VA 22313-1450
www.uspto.gov

#4

MAILED

NOV 28 2003

Office of the Director
Group 3600

JOHNSON & STAINBROOK, LLP
Suite 203
3550 Round Barn Blvd.
Santa Rosa, CA 95403

Paper No. 4

In re application of
William Henderson
Application No. 10/388,801
Filed: March 13, 2003
For: PLANT WIND SCREEN, SOIL BARRIER, AND WATER CONTROL APPARATUS

DECISION ON PETITION TO MAKE SPECIAL (APPLICANT'S AGE)

This is a decision on the petition submitted on March 13, 2003 under 37 CFR 1.102 (c) to make the above-identified application special under the accelerated examination procedure set forth in MPEP 708.02, Section IV: Applicant's Age. The delay in deciding this petition is regretted.

The petition is **GRANTED**.

An application may be accorded special status upon the filing of a petition providing evidence showing that the applicant is at least 65 years old. Such a showing may be provided by evidence such as a birth certificate or a statement from the applicant.

The evidence submitted with the petition is a driver's license from the applicant showing that he is at least 65 years of age.

The examiner is directed (1) to make an interference search for possible interfering applications, (2) to promptly examine this application out of turn, and (3) if any interfering application is discovered, to examine such application simultaneously and state in the first official letter of such application that it is being taken out of turn because of a possible interference.

Petitioner is advised that this application will continue to be special, throughout its entire prosecution and pendency, including interference or appeal, if any, only if petitioner makes a prompt ***bona fide*** effort, in response to each Office action, to place the application in condition for allowance, even if it is necessary to conduct an interview with the examiner to accomplish this purpose.

SUMMARY: Petition to Make Special **GRANTED**.

Kenneth J. Dorner
Special Programs Examiner
Technology Center 3600
(703) 308-0866

KJD/cps 11/24/03

UNITED STATES PATENT AND TRADEMARK OFFICE

Commissioner for Patents
United States Patent and Trademark Office
P.O. Box 1450
Alexandria, VA 22313-1450
www.uspto.gov

NIKOLAI & MERSEREAU, P.A.
900 SECOND AVENUE SOUTH
SUITE 820
MINNEAPOLIS MN 55402

COPY MAILED

FEB 2 2 2007

OFFICE OF PETITIONS

In re Application of
Ching-Fei Chen
Application No. 10/388,805
Filed: 03/17/2003
Attorney Docket No. 1496-852

DECISION ON PETITION

This is a decision on the petition under 37 CFR 1.137(b), filed August 7, 2006, to revive the above-identified application.

This application became abandoned for failure to pay the issue fee as required by the Notice of Allowance and Fee(s) Due mailed on November 7, 2005, which set a three (3) month statutory period for reply. Accordingly, the application became abandoned on February 8, 2006. A Notice of Abandonment was mailed on March 28, 2006.

Petitioner has met the requirements under 37 CFR 1.137(b). Accordingly, the petition is **granted.**

This matter is being forwarded to the Office of Patent Publication for processing into a patent.

Telephone inquiries concerning the issuance of the application into a patent should be directed to the Office of Patent Publication, Customer Service at (571) 272-4200.

Telephone inquiries specifically concerning this decision should be directed to the undersigned at (571) 272-3211.

Christina Tartera Donnell

Christina Tartera Donnell
Senior Petitions Attorney
Office of Petitions

UNITED STATES PATENT AND TRADEMARK OFFICE

Commissioner for Patents
United States Patent and Trademark Office
P.O. Box 1450
Alexandria, VA 22313-1450
www.uspto.gov

LAW OFFICES OF ADAM H. JACOBS
1904 FARNAM STREET, SUITE 726
OMAHA, NE 68102

COPY MAILED

AUG 0 5 2004

OFFICE OF PETITIONS

In re Application of
Douglas M. Okuniewicz
Application No. 10/388,819
Filed: March 14, 2003
Attorney Docket No. 1008-015

DECISION GRANTING PETITION
UNDER 37 CFR 1.313(c)(2)

This is a decision on the petition, filed August 4, 2004, under 37 CFR 1.313(c)(2) to withdraw the above-identified application from issue after payment of the issue fee.

The petition is **GRANTED**.

The above-identified application is withdrawn from issue for consideration of a submission under 37 CFR 1.114 (request for continued examination). See 37 CFR 1.313(c)(2).

Petitioner is advised that the issue fee paid on June 15, 2004 in the above-identified application cannot be refunded. If, however, the above-identified application is again allowed, petitioner may request that it be applied towards the issue fee required by the new Notice of Allowance.[1]

Telephone inquiries should be directed to the undersigned at (703) 305-8680.

This matter is being referred to Technology Center AU 3713 for processing of the request for continued examination under 37 CFR 1.114 and for consideration of the concurrently filed Information Disclosure Statement.

Frances Hicks
Petitions Examiner
Office of Petitions
Office of the Deputy Commissioner
for Patent Examination Policy

---

[1] The request to apply the issue fee to the new Notice may be satisfied by completing and returning the new Issue Fee Transmittal Form PTOL-85(b), which includes the following language thereon: "Commissioner for Patents is requested to apply the Issue Fee and Publication Fee (if any) or re-apply any previously paid issue fee to the application identified above." Petitioner is advised that, whether a fee is indicated as being due or not, the Issue Fee Transmittal Form **must** be completed and timely submitted to avoid abandonment. Note the language in bold text on the first page of the Notice of Allowance and Fee(s) Due (PTOL-85).

UNITED STATES PATENT AND TRADEMARK OFFICE

Commissioner for Patents
United States Patent and Trademark Office
P.O. Box 1450
Alexandria, VA 22313-1450
www.uspto.gov

BRADLEY ARANT ROSE & WHITE LLP
200 CLINTON AVE. WEST
SUITE 900
HUNTSVILLE AL 35801

COPY MAILED

FEB 0 1 2006

OFFICE OF PETITIONS

In re Application of
Douglas M. Okuniewicz
Application No. 10/388,819
Filed: March 14, 2003
Title of Invention: **LOTTERY SYSTEM/ELECTRONIC GAMING DEVICE INTERFACE AND GAMBLING GAME**

: DECISION ON PETITION
: UNDER 37 CFR 1.78(a)(3)

This is a decision on the petition under 37 CFR 1.78(a)(3), filed December 22, 2005, to accept an unintentionally delayed claim under 35 U.S.C. 120 for the benefit of priority to the prior-filed nonprovisional applications set forth in the amendment filed August 16, 2004.

The petition is **DISMISSED**.

A petition for acceptance of a claim for late priority under 37 CFR 1.78(a)(3) is only applicable to those applications filed on or after November 29, 2000. Further, the petition is appropriate only after the expiration of the period specified in 37 CFR 1.78(a)(2)(ii). In addition, the petition under 37 CFR 1.78(a)(3) must be accompanied by:

(1) the reference required by 35 U.S.C.120 and 37 CFR 1.78(a)(2)(i) of the prior-filed application, unless previously submitted;
(2) the surcharge set forth in 1.17(t); and
(3) a statement that the entire delay between the date the claim was due under 37 CFR 1.78(a)(2)(ii) and the date the claim was filed was unintentional. The Commissioner may require additional information where there is a question whether the delay was unintentional.

The amendment submitted concurrently with the petition as drafted is unacceptable and, therefore, is not considered a proper reference under 37 CFR 1.78(a)(2)(i). In this regard, the amendment references and claims priority to application no. 08/944,075, which is an incorrect application serial number.

Before the petition can be granted, petitioner must submit a substitute amendment in compliance with the aforementioned rules, citing a correct serial number for application no. 08/994,075, along with a renewed petition under 37 CFR 1.78(a)(3).[1]

Further correspondence with respect to this matter should be addressed as follows:

By mail: Mail Stop PETITIONS
Commissioner for Patents
Post Office Box 1450
Alexandria, VA 22313-1450

By hand: Customer Service Window
Mail Stop Petitions
Randolph Building
401 Dulany Street
Alexandria, VA 22314

By fax: (571) 273-8300
ATTN: Office of Petitions

Any questions concerning this matter may be directed to Senior Petitions Attorney Patricia Faison-Ball at (571) 272-3212

Frances Hicks

Frances Hicks
Petitions Examiner
Office of Petitions

1 The claim for priority may also be made in an Application Data Sheet in compliance with 37 CFR 1.121 and 37 CFR 1.76(b)(5).

UNITED STATES PATENT AND TRADEMARK OFFICE

Commissioner for Patents
United States Patent and Trademark Office
P.O. Box 1450
Alexandria, VA 22313-1450
www.uspto.gov

BRADLEY ARANT ROSE & WHITE LLP
200 CLINTON AVE. WEST
SUITE 900
HUNTSVILLE AL 35801

COPY MAILED
MAR 16 2006
OFFICE OF PETITIONS

In re Application of
Douglas M. Okuniewicz
Application No. 10/388,819
Filed: March 14, 2003
Title of Invention: **LOTTERY SYSTEM/ELECTRONIC GAMING DEVICE INTERFACE AND GAMBLING GAME**

: DECISION ON PETITION
: UNDER 37 CFR 1.78(a)(3)

This is a decision on the renewed petition under 37 CFR 1.78(a)(3), filed February 9, 2006, to accept an unintentionally delayed claim under 35 U.S.C. 120 for the benefit of priority to the prior-filed nonprovisional applications set forth in the amendment filed August 16, 2004.

The petition is **DISMISSED**.

A petition for acceptance of a claim for late priority under 37 CFR 1.78(a)(3) is only applicable to those applications filed on or after November 29, 2000. Further, the petition is appropriate only after the expiration of the period specified in 37 CFR 1.78(a)(2)(ii). In addition, the petition under 37 CFR 1.78(a)(3) must be accompanied by:

(1) the reference required by 35 U.S.C.120 and 37 CFR 1.78(a)(2)(i) of the prior-filed application, unless previously submitted;
(2) the surcharge set forth in 1.17(t); and
(3) a statement that the entire delay between the date the claim was due under 37 CFR 1.78(a)(2)(ii) and the date the claim was filed was unintentional. The Commissioner may require additional information where there is a question whether the delay was unintentional.

The petition does not comply with item (1).

We apologize that we didn't pick it up before or in the previous decision, but an amendment to the specification filed December17, 2004 first noted the priority claim to application no. 09/639,441 but did not state a proper reference to that prior filed application.

37 CFR 1.78(a)(2)(i) requires that any nonprovisional application claiming the benefit of one or more prior-filed copending nonprovisional applications must contain or be

amended to contain a reference to each such prior-filed application, identifying it by application number (consisting of the series code and serial number) and indicating the relationship of the applications. The relationship between the applications is whether the subject application is a continuation, divisional, or continuation-in-part of a prior-filed nonprovisional application. An example of a proper benefit claim is: "This application is a continuation of Application No. 10/---, filed---." A benefit claim that merely states: "This application claims the benefit of Application No. 10/---, filed---," does not comply with 37 CFR 1.78(a)(2)(i) since the proper relationship, which includes the type of continuing application, is not stated. Also, the status of each nonprovisional parent application (if it is patented or abandoned) should also be indicated, following the filing date of the parent nonprovisional application. *See* MPEP Section 201.11, Reference to Prior Nonprovisional Applications.

The amendment fails to comply with the provisions of 37 CFR 1.78(a)(2)(i) and is therefore unacceptable.

Before the petition under 37 CFR §§ 1.78(a)(3) can be granted, a renewed petition and either an Application Data Sheet or a substitute amendment (complying with the provisions of 37 CFR 1.121 or 37 CFR 1.76(b)(5)) to correct the above matters are required.

Further correspondence with respect to this matter should be addressed as follows:

By mail: Mail Stop PETITIONS
Commissioner for Patents
Post Office Box 1450
Alexandria, VA 22313-1450

By hand: Customer Service Window
Mail Stop Petitions
Randolph Building
40l Dulany Street
Alexandria, VA 22314

By fax: (571) 273-8300
ATTN: Office of Petitions

Any inquiries concerning this decision may be directed to Senior Petitions Attorney Patricia Faison-Ball at (571) 272-3212.

Frances Hicks
Petitions Examiner
Office of Petitions

UNITED STATES PATENT AND TRADEMARK OFFICE

Commissioner for Patents
United States Patent and Trademark Office
P.O. Box 1450
Alexandria, VA 22313-1450
www.uspto.gov

BRADLEY ARANT ROSE & WHITE LLP
200 CLINTON AVE. WEST
SUITE 900
HUNTSVILLE AL 35801

COPY MAILED
MAY 0 3 2006
OFFICE OF PETITIONS

In re Application of
Douglas M. Okuniewicz
Application No. 10/388,819
Filed: March 14, 2003
Title of Invention: **LOTTERY SYSTEM/ELECTRONIC GAMING DEVICE INTERFACE AND GAMBLING GAME**

: DECISION ON PETITION
: UNDER 37 CFR 1.78(a)(3)

This is a decision on the second renewed petition under 37 CFR 1.78(a)(3), filed March 29, 2006, to accept an unintentionally delayed claim under 35 U.S.C. 120 for the benefit of priority to the prior-filed nonprovisional applications set forth in the amendment filed March 29, 2006.

The petition is **GRANTED**.

A petition for acceptance of a claim for late priority under 37 CFR 1.78(a)(3) is only applicable to those applications filed on or after November 29, 2000. Further, the petition is appropriate only after the expiration of the period specified in 37 CFR 1.78(a)(2)(ii). In addition, the petition under 37 CFR 1.78(a)(3) must be accompanied by:

(1) the reference required by 35 U.S.C.120 and 37 CFR 1.78(a)(2)(i) of the prior-filed application, unless previously submitted;
(2) the surcharge set forth in 1.17(t); and
(3) a statement that the entire delay between the date the claim was due under 37 CFR 1.78(a)(2)(ii) and the date the claim was filed was unintentional. The Commissioner may require additional information where there is a question whether the delay was unintentional.

All the above requirements having been satisfied, the late claim for priority under 35 U.S.C. 120 is accepted as being unintentionally delayed.

The granting of the petition to accept the delayed benefit claim to the prior-filed applications under 37 CFR 1.78(a)(3) should not be construed as meaning that this application is entitled to the benefit of the prior-filed applications. In order for this application to be entitled to the benefit of the prior-filed applications, all other requirements under 35 U.S.C. 120 and 37 CFR 1.78(a)(1) and (a)(2) must be met. Similarly, the fact that the corrected Filing Receipt accompanying this decision on petition includes the prior-filed applications should not be construed as meaning that applicant is entitled to the claim for benefit of priority to the prior-filed applications noted thereon. Accordingly, the examiner will, in due course, consider this benefit claim and determine whether the application is entitled to the benefit of the earlier filing date.

A corrected Filing Receipt, which includes the priority claim to the prior-filed nonprovisional applications, accompanies this decision on petition.

Any inquiries concerning this decision may be directed to Senior Petitions Attorney Patricia Faison-Ball at (571) 272-3212. All other inquiries concerning either the examination procedures or status of the application should be directed to the Technology Center.

This matter is being referred to Technology Center Art Unit 3713 for appropriate action on the amendment filed March 29, 2006, including consideration by the examiner of applicant's entitlement to claim benefit of priority under 35 U.S.C. 120 to the prior-filed applications.

Frances Hicks
Petitions Examiner
Office of Petitions

ATTACHMENT: Corrected Filing Receipt

UNITED STATES PATENT AND TRADEMARK OFFICE

Commissioner for Patents
United States Patent and Trademark Office
P. O. Box 1450
Alexandria, VA 22313-1450
www.uspto.gov

Paper No. 4

FISH & RICHARDSON P.C.
3300 DAIN RAUSCHER PLAZA
MINNEAPOLIS MN 55402

COPY MAILED
JUL 21 2004
OFFICE OF PETITIONS

In re Application of
Terence S. Dowling, et al.
Application No. 10/388,828
Filed: March 14, 2003
Attorney Docket No.07844-323002/P297C1

DECISION DISMISSING PETITION
UNDER 37 CFR 1.137(b)

This is a decision on the petition, filed June 2, 2004, under 37 CFR 1.137(f) to revive the instant nonprovisional application for failure to timely notify the U.S. Patent and Trademark Office (USPTO) of the filing of an application in a foreign country, or under a multinational treaty that requires publication of applications eighteen months after filing. *See* 37 CFR 1.137(f).

The petition is **dismissed** as inappropriate for the reasons stated below.

The record discloses that, on March 14, 2003, the date of filing of the instant application, a Request and Certification under 35 U.S.C. § 122(b)(2)(B)(i) was filed certifying that "the invention disclosed in the attached **application has not and will not** be the subject of an application filed in another country, or under a multilateral international agreement, that requires publication at eighteen months after filing."

Petitioner now requests under 35 U.S.C. § 122(b)(2)(B)(ii) that the Request and Certification Under 35 U.S.C. § 122(b)(2)(B)(i) be rescinded and the application be revived because this application became abandoned for failure to notify the USPTO within 45 days of the filing of a corresponding international or foreign application. In this regard, petitioner states that an international or foreign application corresponding to the instant application was filed on August 14, 2000, which date is prior to the date of filing the instant application.

The instant nonprovisional application did not become abandoned as a result of the filing of a corresponding application filed in another country, or under a multilateral international agreement,

subsequent to the filing of the present application. In this regard, 35 U.S.C. § 122((b)(2)(B)(iii) states:

> An applicant who has made a request under clause (I) but who **subsequently files, in a foreign country or under a multilateral international agreement** specified in clause (I), an application directed to the invention disclosed in the application filed in the Patent and Trademark Office, shall notify the Director of such filing not later than 45 days **after the date of the filing of such foreign or international application**. A failure of the applicant to provide such notice within the prescribed period shall result in the application being regarded as abandoned, unless it is shown to the satisfaction of the Director that the delay in submitting the notice was unintentional [emphasis supplied].

The facts of this case are that the subject application was filed on March 14,2003, and the corresponding foreign application was filed on August 14, 2000. The statute does not provide for the situation where a certification under 35 U.S.C. § 122(b)(2)(B)(i) was made, despite the fact that an application was previously filed in another country or under the multilateral international agreement. The provisions of 35 U.S.C. § 122(b)(2)(B)(iii) only provide for revival in the situation where a certification was made under 35 U.S.C. § 122(b)(2)(B)(i) at the time of filing the application and an application was subsequently filed in a foreign country without notifying the Office within 45 days of the filing thereof.

In view of the above and since this application did not become abandoned pursuant to the provisions of 35 U.S.C. § 122(b)(2)(B)(iii), a petition to revive under the provisions of 37 CFR 1.137(b) is inappropriate and, therefore, must be dismissed.

As requested, the Request and Certification Under 35 U.S.C. § 122(b)(2)(B)(i) has been rescinded. A Notice Regarding Rescission of Nonpublication Request indicating a projected publication date of October 28, 2004 accompanies this decision.

The rules and statutory provisions governing the operations of the USPTO require payment of a fee on filing each petition. *See* 35 U.S.C. § 41(c)(7). Accordingly, the petition fee of $1,300 is

being assessed to petitioner's deposit account as authorized.

Any inquiries concerning this decision may be directed to the undersigned at (703) 305-9220.

Sherry D. Brinkley

Sherry D. Brinkley
Petitions Examiner
Office of Petitions
Office of the Deputy Commissioner
for Patent Examination Policy

Conferee: Frances M. Hicks
Lead Petitions Examiner

ATTACHMENT: Notice Regarding Rescission of Nonpublication Request

UNITED STATES PATENT AND TRADEMARK OFFICE

Commissioner for Patents
United States Patent and Trademark Office
P.O. Box 1450
Alexandria, VA 22313-1450
www.uspto.gov

COPY MAILED
MAY 0 8 2006
OFFICE OF PETITIONS

FISH & RICHARDSON
P.O. BOX 1022
MINNEAPOLIS MN 55440-1022

In re Application of	:	
Terence S. Dowling et al	:	
Application No. 10/388,828	:	ON PETITION
Filed: March 14, 2003	:	
Attorney Docket No. 07844-323002/P297C1	:	

This is a decision on the petition, filed May 8, 2006, under 37 CFR 1.313(c)(2) to withdraw the above-identified application from issue after payment of the issue fee.

The petition is **GRANTED**.

The above-identified application is withdrawn from issue for consideration of a submission under 37 CFR 1.114 (request for continued examination). See 37 CFR 1.313(c)(2).

Petitioner is advised that the issue fee paid on March 27, 2006, in the above-identified application cannot be refunded. If, however, the above-identified application is again allowed, petitioner may request that it be applied towards the issue fee required by the new Notice of Allowance.[1]

Telephone inquiries should be directed to the undersigned at (571) 272-3208.

The examiner of Technology Center AU 2628 will consider the request for continued examination under 37 CFR 1.114.

Karen Creasy
Petitions Examiner
Office of Petitions

---

[1] The request to apply the issue fee to the new Notice may be satisfied by completing and returning the new Issue Fee Transmittal Form PTOL-85(b), which includes the following language thereon: "Commissioner for Patents is requested to apply the Issue Fee and Publication Fee (if any) or re-apply any previously paid issue fee to the application identified above." Petitioner is advised that, whether a fee is indicated as being due or not, the Issue Fee Transmittal Form **must** be completed and timely submitted to avoid abandonment. Note the language in bold text on the first page of the Notice of Allowance and Fee(s) Due (PTOL-85).

UNITED STATES PATENT AND TRADEMARK OFFICE

COMMISSIONER FOR PATENTS
UNITED STATES PATENT AND TRADEMARK OFFICE
P.O. BOX 1450
ALEXANDRIA, VA 22313-1450
www.uspto.gov

Paper No. _____

Date : May 8, 2006

TO : Director, Office of Patent Publication

FROM : Office of the Deputy Commissioner
for Patent Examination Policy

SUBJECT : Withdrawal from Issue of

Applicant(s) :Terence S. Dowling et al
Application No. :10/388,828
Filed :March 14, 2003

The above-identified application has been assigned Patent No. 7,050,057 and an issue date of May 23, 2006.

It is hereby directed that this application be withdrawn from issue at the request of the applicant.

Do not refund the issue fee.

The following erratum should be published in the Official Gazette if the above-identified application is published in the OG of May 23, 2006:

"All reference to Patent No. 7,050,057 to Terence S. Dowling et al of California for DEVICE DEPENDENT RENDERING appearing in the Official Gazette of May 23, 2006 should be deleted since no patent was granted."

Karen Creasy
Petitions Examiner
Office of Petitions
Office of the Deputy Commissioner
for Patent Examination Policy

cc: Paul Harrison, MDW-4B03,(FAX-273-5468)
Deneise Boyd, MDE-3D39 (FAX-273-5124)
Mary Louise McAskill, ST-8C15 (FAX 305-4372)
Niomi Farmer, ST-8C14 (FAX-305-4372)
Mary E. Johnson (Cookie), MDE-7C71 (FAX 273-0038
Duane Davis P/OPC MDE-7D89

UNITED STATES PATENT AND TRADEMARK OFFICE

COMMISSIONER FOR PATENTS
UNITED STATES PATENT AND TRADEMARK OFFICE
P.O. BOX 1450
ALEXANDRIA, VA 22313-1450
www.uspto.gov

FISH & RICHARDSON P.C.
P.O. Box 1022
MINNEAPOLIS MN 55440-1022

COPY MAILED

APR 29 2009

OFFICE OF PETITIONS

In re Patent No. 7,425,960	:	
DOWLING et al.	:	DECISION ON
Issue Date: September 16, 2008	:	REQUEST FOR RECONSIDERATION
Application No. 10/388,828	:	OF
Filed: March 14, 2003	:	PATENT TERM ADJUSTMENT
Docket No. 07844-323002/P297C1	:	

This is a decision on the "APPLICATION FOR PATENT TERM ADJUSTMENT UNDER 37 CFR 1.705(d)", filed November 14, 2008, requesting that the patent term adjustment determination for the above-identified patent be changed from one hundred ten (110) days to one hundred sixty-five (165) days.

The request for reconsideration of patent term adjustment is **DISMISSED**.

On September 16, 2008, the above-identified application matured into US Patent No. 7,425,960 with a patent term adjustment of 110 days. This request for reconsideration of patent term adjustment was timely filed within two months of the issue date of the patent. See 37 CFR 1.705(d).

The Office acknowledges submission of the $200.00 fee set forth in 37 CFR 1.18(e). No additional fees are required.

Patentees request recalculation of the patent term adjustment based on the decision in Wyeth v. Dudas, 580 F. Supp. 2d 138, 88 U.S.P.Q. 2d 1538 (D.D.C. 2008). Patentees assert that pursuant to Wyeth, a PTO delay under 35 U.S.C. 154(b)(1)(A) overlaps with a delay under 35 U.S.C. 154(b)(1)(B) only if the delays "occur on the same day." Patentees maintain that the period of adjustment due to the Three Year Delay by the Office, pursuant to 37 CFR 1.703(b), of 55 days and the period of adjustment due to examination delay, pursuant to 37 CFR 1.702(a), of 369

days do not overlap as these periods do not occur on the same day.

The 55 day period is calculated based on the application having been filed under 35 U.S.C. 111(a) on March 14, 2003, and a request for continued examination (RCE) having been filed in this application on May 8, 2006, three years and 55 days later. Patentees assert that in addition to this 55 day period, they are entitled to a period of adjustment due to examination delay, pursuant to 37 CFR 1.702(a) of 369 days for the failure by the Office to mail at least one of a notification under 35 U.S.C. 132 not later than fourteen months after the date on which the application was filed under 35 U.S.C. 111(a), pursuant to § 1.702(a)(1). A first non-final Office action was mailed on May 18, 2005, 14 months and 369 days after the application was filed on March 14, 2003.

Under 37 CFR 1.703(f), Patentees are entitled to a period of patent term adjustment equal to the period of delays based on the grounds set forth in 37 CFR 1.702 reduced by the period of time equal to the period of time during which Patentees failed to engage in reasonable efforts to conclude prosecution pursuant to 37 CFR 1.704. In other words, it is the period of Office delay reduced by the period of applicant delay. The period of reduction of 259 days for applicant delay is not in dispute.

Patentees do not dispute that the total period of Office delay is the sum of the period of Three Years Delay (55 days) and the period of Examination Delay (369 days) to the extent that these periods of delay are not overlapping. However, in effect, Patentees contend that no portion of the Three Year Delay period overlaps with the period of 14 month examination delay. Accordingly, Patentees submit that the total period of adjustment for Office delay is 424 days, which is the sum of the period of Three Year Delay (55 days) and the period of Examination Delay (369 days), reduced by the period of overlap (0 days).

As such, Patentees assert entitlement to a patent term adjustment of 165 days (55 + 369 reduced by 0 overlap - 259 (applicant delay)).

The Office agrees that as of the filing of the RCE on May 8, 2006, the application was pending three years and 55 days after

its filing date. The Office agrees that the action detailed above was not taken within the specified time frame, and thus, the entry of a period of adjustment of 369 days is correct. At issue is whether Patentees should accrue 55 days of patent term adjustment for the Office taking in excess of three years to issue the patent, as well as 369 days for Office failure to take a certain action within a specified time frame (or examination delay).

The Office contends that 55 days overlap. Patentees' calculation of the period of overlap is inconsistent with the Office's interpretation of this provision. 35 U.S.C. 154(b)(2)(A) limits the adjustment of patent term, as follows:

> to the extent that the periods of delay attributable to grounds specified in paragraph (1) overlap, the period of any adjustment granted under this subsection shall not exceed the actual number of days the issuance of the patent was delayed.

Likewise, 37 CFR 1.703(f) provides that:

> To the extent that periods of delay attributable to the grounds specified in §1.702 overlap, the period of adjustment granted under this section shall not exceed the actual number of days the issuance of the patent was delayed.

As explained in *Explanation of 37 CFR 1.703(f) and of the United States Patent and Trademark Office Interpretation of 35 U.S.C. 154(b)(2)(A)*, 69 Fed. Reg. 34283 (June 21, 2004), the Office interprets 35 U.S.C. 154(b)(2)(A) as permitting either patent term adjustment under 35 U.S.C. 154(b)(1)(A)(i)-(iv), or patent term adjustment under 35 U.S.C. 154(b)(1)(B), but not as permitting patent term adjustment under both 35 U.S.C. 154(b)(1)(A)(i)-(iv) and 154(b)(1)(B). Accordingly, the Office implements the overlap provision as follows:

> If an application is entitled to an adjustment under 35 U.S.C. 154(b)(1)(B), the entire period during which the application was pending (except for periods excluded under 35 U.S.C. 154(b)(1)(B)(i)-(iii)), and not just the period beginning three years after the actual filing date of the application, is the period of delay under 35 U.S.C.

> 154(b)(1)(B) in determining whether periods of delay overlap under 35 U.S.C. 154(b)(2)(A). Thus, any days of delay for Office issuance of the patent more than 3 years after the filing date of the application, which overlap with the days of patent term adjustment accorded prior to the issuance of the patent will not result in any additional patent term adjustment. See 35 U.S.C. 154(b)(1)(B), 35 U.S.C. 154(b)(2)(A), and 37 CFR § 1.703(f). See *Changes to Implement Patent Term Adjustment Under Twenty Year Term; Final Rule*, 65 Fed. Reg. 56366 (Sept. 18, 2000). See also *Revision of Patent Term Extension and Patent Term Adjustment Provisions; Final Rule*, 69 Fed. Reg. 21704 (April 22, 2004), 1282 Off. Gaz. Pat. Office 100 (May 18, 2004). See also *Explanation of 37 CFR 1.703(f) and of the United States Patent and Trademark Office Interpretation of 35 U.S.C. 154(b)(2)(A)*, 69 Fed. Reg. 34283 (June 21, 2004).

The current wording of § 1.703(f) was revised in response to the misinterpretation of this provision by a number of Patentees. The rule was slightly revised to more closely track the corresponding language of 35 U.S.C. 154(b)(2)(A). The relevant portion differs only to the extent that the statute refers back to provisions of the statute whereas the rule refers back to sections of the rule. This was not a substantive change to the rule nor did it reflect a change of the Office's interpretation of 35 U.S.C. 154(b)(2)(A). As stated in the *Explanation of 37 CFR 1.703(f) and of the United States Patent and Trademark Office Interpretation of 35 U.S.C. 154(b)(2)(A)*, the Office has consistently taken the position that if an application is entitled to an adjustment under the three-year pendency provision of 35 U.S.C. 154(b)(1)(B), the entire period during which the application was pending before the Office (except for periods excluded under 35 U.S.C. 154(b)(1)(B)(i)-(iii)), and not just the period beginning three years after the actual filing date of the application, is the relevant period under 35 U.S.C. 154(b)(1)(B) in determining whether periods of delay "overlap" under 35 U.S.C. 154(b)(2)(A).

This interpretation is consistent with the statute. Taken together the statute and rule provide that to the extent that periods of delay attributable to grounds specified in 35 U.S.C. 154(b)(1) and in corresponding § 1.702 overlap, the period of adjustment granted shall not exceed the actual number of days

the issuance of the patent was delayed. The grounds specified in these sections cover the A) guarantee of prompt Patent and Trademark Office responses, B) guarantee of no more than 3 year application pendency, and C) guarantee or adjustments for delays due to interference, secrecy orders and appeals. A section by section analysis of 35 U.S.C. 154(b)(2)(A) specifically provides that:

> Section 4402 imposes limitations on restoration of term. In general, pursuant to [35 U.S.C.] 154(b)(2)(A)-(C), total adjustments granted for restorations under [35 U.S.C. 154](b)(1) are reduced as follows: (1) To the extent that there are multiple grounds for extending the term of a patent that may exist simultaneously (e.g., delay due to a secrecy order under [35 U.S.C.] 181 and administrative delay under [35 U.S.C.] 154(b)(1)(A)), the term should not be extended for each ground of delay but only for the actual number of days that the issuance of a patent was delayed; See 145 Cong. Rec. S14,718[1]

As such, the period for over three-year pendency does not overlap only to the extent that the actual dates in the period beginning three years after the date on which the application was filed overlap with the actual dates in the periods for failure of the Office to take action within specified time frames. In other words, consideration of the overlap does not begin three years after the filing date of the application. Treating the relevant period as starting on March 14, 2006, the date that is three years after the actual filing date of the application, is incorrect.

In this instance, the relevant period under 35 U.S.C. 154(b)(1)(B) in determining whether periods of delay "overlap" under 35 U.S.C. 154(b)(2)(A) is the entire period during which the application was pending before the Office, March 14, 2003, as terminated by the filing of the RCE on May 8, 2006. 369 days of patent term adjustment were accorded prior to the issuance of the patent for the Office failing to respond within a specified time frame during the pendency of the application. All of the

---

[1] The AIPA is title IV of the Intellectual Property and Communications Omnibus Reform Act of 1999 (S. 1948), which was incorporated and enacted as law as part of Pub. L. 106-113. The Conference Report for H.R. 3194, 106th Cong. 1st Sess. (1999), which resulted in Pub. L. 106-113, does not contain any discussion (other than the incorporated language) of S. 1948. A section-by-section analysis of S. 1948, however, was printed in the Congressional Record at the request of Senator Lott, See 145 Cong. Rec. S14,708-26 (1999)(daily ed. Nov. 17, 1999).

55 days for Office delay in issuing the patent overlap with the 369 days of Office delay. During that time, the issuance of the patent was delayed by 369 days, not 369 + 55 days. The Office took 14 months and 369 days to issue a first Office action. Otherwise, the Office took all actions set forth in 37 CFR § 1.702(a) within the prescribed timeframes. Nonetheless, given the initial 369 days of Office delay and the 259 days of applicant delay and the time allowed within the timeframes for processing and examination, as of the filing date of the RCE, the application was pending three years and 55 days. The Office did not delay 369 days and then an additional 55 days. Accordingly, 369 days of patent term adjustment (not 369 and 55 days) was properly entered because the period of delay of 55 days attributable to the delay in the issuance of the patent overlaps with the adjustment of 369 days attributable to grounds specified in § 1.702(a)(1). Entry of both periods is not warranted. 369 days is determined to be the actual number of days that the issuance of the patent was delayed, considering the 55 days over three years to the filing of the RCE.

Accordingly, at issuance, the Office properly entered no additional days of patent term adjustment for the Office taking in excess of three years to issue the patent.

In view thereof, no adjustment to the patent term will be made.

Patentees remain under a duty to disclose to the Office entry of additional patent term adjustment that is not warranted.

Telephone inquiries specific to this matter should be directed to the undersigned at (571) 272-3211.

Christina Tartera Donnell

Christina Tartera Donnell
Senior Petitions Attorney
Office of Petitions
Office of the Deputy Commissioner
for Patent Examination Policy

UNITED STATES PATENT AND TRADEMARK OFFICE

COMMISSIONER FOR PATENTS
UNITED STATES PATENT AND TRADEMARK OFFICE
P.O. BOX 1450
ALEXANDRIA, VA 22313-1450
www.uspto.gov

BRIAN M. BERLINER
O'MELVENY & MYERS LLP
400 SOUTH HOPE STREET
LOS ANGELES, CA 90071-2899

COPY MAILED

DEC 22 2005

OFFICE OF PETITIONS

In re Application of
Mahesh Natverlal Thaker, et al.
Application No. 10/388,829
Filed: March 14, 2003
Attorney Docket No.: 681331-74

ON PETITION

This is a decision on the petition, filed December 13, 2005, under 37 CFR 1.313(c)(2) to withdraw the above-identified application from issue after payment of the issue fee.

The petition is **GRANTED**.

The above-identified application is withdrawn from issue for consideration of a submission under 37 CFR 1.114 (request for continued examination). See 37 CFR 1.313(c)(2).

Petitioner is advised that the issue fee paid on October 10, 2005, in the above-identified application, cannot be refunded. If, however, the above-identified application is again allowed, petitioner may request that it be applied towards the issue fee required by the new Notice of Allowance.[1]

Telephone inquiries relating to this decision should be directed to the undersigned at (571) 272-3204.

The application is being referred to Technology Center AU 2116 for further processing of the request for continued examination under 37 CFR 1.114.

Sherry D. Brinkley
Petitions Examiner
Office of Petitions

[1]The request to apply the issue fee to the new Notice may be satisfied by completing and returning the new Issue Fee Transmittal Form PTOL-85(b), which includes the following language thereon: "Commissioner for Patents is requested to apply the Issue Fee and Publication Fee (if any) or re-apply any previously paid issue fee to the application identified above." Petitioner is advised that, whether a fee is indicated as being due or not, the Issue Fee Transmittal Form **must** be completed and timely submitted to avoid abandonment. Note the language in bold text on the first page of the Notice of Allowance and Fee(s) Due (PTOL-85).

UNITED STATES PATENT AND TRADEMARK OFFICE

Commissioner for Patents
United States Patent and Trademark Office
P.O. Box 1450
Alexandria, VA 22313-1450
www.uspto.gov

Date : December 22, 2005

TO : Director, Office of Patent Publication

FROM : Office of the Deputy Commissioner for Patent Examination Policy

SUBJECT : Withdrawal from Issue of

Applicant(s) : Mahesh Natverlal Thaker et al.
Application No. : 10/388,829
Filed : March 14, 2003

The above-identified application has been assigned Patent No. 6,981,160 and an issue date of December 27, 2005.

It is hereby directed that this application be withdrawn from issue at the request of the applicant.

Do not refund the issue fee.

The following erratum should be published in the Official Gazette if the above-identified application is published in the OG of December 27, 2005:

> "All reference to Patent No. 6,981,160 to MAHESH NATVERLAL THAKER, ET AL. of CALIFORNIA for VOLTAGE SET POINT CONTROL SCHEME appearing in the Official Gazette of December 27, 2005, should be deleted since no patent was granted."

Sherry D. Brinkley
Petitions Examiner
Office of Petitions
Office of the Deputy Commissioner
for Patent Examination Policy

cc: Paul Harrison, Crystal Park 3-44l (FAX-306-2737)
Deneise Boyd, Crystal Park 2, Suite 1100 (FAX-308-5413)
Mary Louise McAskill, Crystal Park 3-910 (FAX 305-4372)
Niomi Farmer, Crystal Park 3-9l0 (FAX-305-4372)
Mary E. Johnson (Cookie), P/OCS, CM1-6D07
Duane K.Davis, P/OCS, CM1-6A07
Tamara K. Greene, PK3-910

UNITED STATES PATENT AND TRADEMARK OFFICE

Commissioner for Patents
United States Patent and Trademark Office
P.O. Box 1450
Alexandria, VA 22313-1450
www.uspto.gov

BRIAN M. BERLINER, ESQ.
O'MELVENY & MYERS LLP
400 SOUTH HOPE STREET
LOS ANGELES, CA 90071-2899

COPY MAILED

DEC 27 2004

OFFICE OF PETITIONS

In re Application of	:
Alain Chapuis	:
Application No. 10/388,831	: DECISION GRANTING PETITION
Filed: March 14, 2003	: UNDER 37 CFR 1.313(c)(2)
Attorney Docket No. 681331-79	:

This is a decision on the petition, filed December 17, 2004, under 37 CFR 1.313(c)(2) to withdraw the above-identified application from issue after payment of the issue fee.

The petition is **GRANTED**.

The above-identified application is withdrawn from issue for consideration of a submission under 37 CFR 1.114 (request for continued examination). See 37 CFR 1.313(c)(2).

Petitioner is advised that the issue fee paid on December 10, 2004 in the above-identified application cannot be refunded. If, however, the above-identified application is again allowed, petitioner may request that it be applied towards the issue fee required by the new Notice of Allowance.[1]

Telephone inquiries should be directed to the undersigned at (571) 272-3218.

This matter is being referred to Technology Center AU 2838 for processing of the request for continued examination under 37 CFR 1.114 and for consideration of the concurrently filed Information Disclosure Statement.

Frances Hicks
Petitions Examiner
Office of Petitions
Office of the Deputy Commissioner
for Patent Examination Policy

---

[1] *The request to apply the issue fee to the new Notice may be satisfied by completing and returning the new Issue Fee Transmittal Form PTOL-85(b), which includes the following language thereon: "Commissioner for Patents is requested to apply the Issue Fee and Publication Fee (if any) or re-apply any previously paid issue fee to the application identified above." Petitioner is advised that, whether a fee is indicated as being due or not, the Issue Fee Transmittal Form* **must** *be completed and timely submitted to avoid abandonment. Note the language in bold text on the first page of the Notice of Allowance and Fee(s) Due (PTOL-85).*

UNITED STATES PATENT AND TRADEMARK OFFICE

Commissioner for Patents
United States Patent and Trademark Office
P.O. Box 1450
Alexandria, VA 22313-1450
www.uspto.gov

BRIAN M. BERLINER, ESQ.
O'MELVENY & MYERS, LLP
400 SOUTH HOPE STREET
LOS ANGELES, CA 90071-2899

COPY MAILED

MAY 17 2005

OFFICE OF PETITIONS

In re Application of	:
Alain Chapuis	:
Application No. 10/388,831	: DECISION GRANTING PETITION
Filed: March 14, 2003	: UNDER 37 CFR 1.313(c)(2)
Attorney Docket No. 681331-79	:

This is a decision on the petition, filed May 6, 2005, under 37 CFR 1.313(c)(2) to withdraw the above-identified application from issue after payment of the issue fee.

The petition is **GRANTED**.

The above-identified application is withdrawn from issue for consideration of a submission under 37 CFR 1.114 (request for continued examination). See 37 CFR 1.313(c)(2).

Petitioner is advised that the issue fee paid on March 14, 2005 in the above-identified application cannot be refunded. If, however, the above-identified application is again allowed, petitioner may request that it be applied towards the issue fee required by the new Notice of Allowance.[1]

Telephone inquiries should be directed to the undersigned at (571) 272-3218.

This matter is being referred to Technology Center AU 2838 for processing of the request for continued examination under 37 CFR 1.114 and for consideration of the concurrently filed Information Disclosure Statement.

Frances Hicks
Petitions Examiner
Office of Petitions
Office of the Deputy Commissioner
for Patent Examination Policy

---

[1] *The request to apply the issue fee to the new Notice may be satisfied by completing and returning the new Issue Fee Transmittal Form PTOL-85(b), which includes the following language thereon: "Commissioner for Patents is requested to apply the Issue Fee and Publication Fee (if any) or re-apply any previously paid issue fee to the application identified above." Petitioner is advised that, whether a fee is indicated as being due or not, the Issue Fee Transmittal Form* **must** *be completed and timely submitted to avoid abandonment. Note the language in bold text on the first page of the Notice of Allowance and Fee(s) Due (PTOL-85).*

SPE Easthom

SPE RESPONSE FOR CERTIFICATE OF CORRECTION 10/388,831

Paper No.: _____

DATE : 2/2/06

TO SPE OF : ART UNIT 2838

SUBJECT : Request for Certificate of Correction on Patent No.: 6936999

A response is requested with respect to the accompanying request for a certificate of correction.

Please complete this form and return with file, within 7 days to:
Palm location 7580, **Certificates of Correction Branch – South Tower – 9A22**
If response is for an IFW, **return to employee (named below) via PUBSCofC Team in MADRAS.**
With respect to the change(s) requested, correcting Office and/or Applicant's errors, should the patent read as shown in the certificate of correction (COCIN)? No new matter should be introduced, nor should the scope or meaning of the claims be changed.

Thank You For Your Assistance

Lamonte M. Newsome
Certificates of Correction Branch
Tel. No. 703-305-8309

The request for issuing the above-identified correction(s) is hereby:
Note your decision on the appropriate box.

- ☒ **Approved** — All changes apply.
- ☐ **Approved in Part** — Specify below which changes **do not** apply.
- ☐ **Denied** — State the reasons for denial below.

Comments:

KARL EASTHOM
SUPERVISORY PATENT EXAMINER
SPE

2838
Art Unit

PTOL-306 (REV. 7/03)
U.S. DEPARTMENT OF COMMERCE Patent and Trademark Office

UNITED STATES PATENT AND TRADEMARK OFFICE

Commissioner for Patents
United States Patent and Trademark Office
P.O. Box 1450
Alexandria, VA 22313-1450
www.uspto.gov

MAY 24 2007

In re Patent No. CHAPUIS, ALAIN	:	
Issue Date: August 30, 2005	:	**DECISION GRANTING**
Appl No.: 10/388,831	:	**PETITION**
Filed: March 14, 2003	:	*37 CFR 1.324*
For: Karl Easthom, SPE AU2838	:	
	:	
	:	
	:	

This is a decision on the petition filed February 5, 2007 to correct inventorship under 37 CFR 1.324.

The petition is granted.

The patented file is being forwarded to Certificate of Corrections Branch for issuance of a certificate naming only the actual inventor or inventors.

Karl D. Easthom
Supervisory Patent Examiner
Art Unit 2838
Technology Center 2800

BRIAN M BERLINER, ESQ
O'MELVENY & MYERS, LLP
400 SOUTH HOPE STREET
LOS ANGELES, CA 90071-2899

UNITED STATES PATENT AND TRADEMARK OFFICE

Commissioner for Patents
United States Patent and Trademark Office
P.O. Box 1450
Alexandria, VA 22313-1450
www.uspto.gov

DATE: May 22, 2007
TO: Certificates of Correction Branch
FROM: Karl D. Easthom
SPE, Art Unit 2838
SUBJECT: REQUEST FOR CERTIFICATE OF CORRECTION

Please issue a Certificate of Correction in U. S. Letters Patent No. 6,936,999 as specified on the attached Certificate.

Karl D. Easthom, SPE
Art Unit 2838

UNITED STATES PATENT AND TRADEMARK OFFICE

CERTIFICATE

Patent No. 6,936,999
Patented: August 30, 2005

On petition requesting issuance of a certificate for correction of inventorship pursuant to 35 U.S.C. 256, it has been found that the above identified patent, through error and without deceptive intent, improperly sets forth the inventorship. Accordingly, it is hereby certified that the correct inventorship of this patent is:

Alain Chapuis
Mikhail Guz

Karl D. Easthom
Supervisory Patent Examiner
Art Unit 2838

UNITED STATES PATENT AND TRADEMARK OFFICE

Commissioner for Patents
United States Patent and Trademark Office
P.O. Box 1450
Alexandria, VA 22313-1450
www.uspto.gov

MAY 13 2005

Robert Samuel Smith
1263 Emory St.
San Jose CA 95126

In re Application	:	
R. S. Smith	:	
Serial No.: 10/388,842	:	DECISION ON PETITION
Filed: March 15, 2003	:	
For: APPARATUS AND METHOD FOR IMPROVING BALANCE	:	

This is in response to applicants' petition filed November 5, 2004 to make the above-identified application special under the provisions of 37 CFR 1.102(c), based on the age of the applicant.

Applicant has satisfied the provisions set forth in M.P.E.P. 708.02, IV. Therefore the petition is **GRANTED**.

The application will be forwarded to the examiner for action on the merits commensurate with this decision.

Should there be any questions with regard to this letter please contact Richard Bertsch by letter addressed to the Director, Technology Center 3700, P.O. Box 1450 Alexandria, VA 22313-1450, or by telephone at (571) 272-3750 or by facsimile transmission at (703) 872-9306.

Richard A. Bertsch

Richard A. Bertsch, Director
Technology Center 3700

UNITED STATES PATENT AND TRADEMARK OFFICE

Commissioner for Patents
United States Patent and Trademark Office
P.O. Box 1450
Alexandria, VA 22313-1450
www.uspto.gov

GRAYBEAL JACKSON HALEY LLP
155 – 108TH AVENUE NE
SUITE 350
BELLEVUE, WA 98004-5901

COPY MAILED

APR 09 2007

OFFICE OF PETITIONS

In re Application of :
Masashi Goto et al :
Application No. 10/388,849 :
Filed: March 13, 2003 :
Attorney Docket No. 2204-4-3 :

ON PETITION

This is a decision on the petition under 37 CFR 1.137(b), filed November 6, 2006, to revive the above-identified application.

The petition is **GRANTED**.

The above-identified application became abandoned for failure to reply in a timely manner to the non-final Office action mailed June 3, 2005, which set a shortened statutory period for reply of three (3) months. No extension of time under the provisions of 37 CFR 1.136(a) were obtained. Accordingly, the above-identified application became abandoned on September 4, 2005.

Telephone inquiries concerning this decision should be directed to Irvin Dingle at (571) 272-3210.

This matter is being referred to Technology Center AU 1763 for further processing.

Irvin Dingle
Petitions Examiner
Office of Petitions

UNITED STATES PATENT AND TRADEMARK OFFICE

COMMISSIONER FOR PATENTS
UNITED STATES PATENT AND TRADEMARK OFFICE
P.O. BOX 1450
ALEXANDRIA, VA 22313-1450
www.uspto.gov

Alan G. Rego
WESTMAN CHAMPLIN & KELLY
International Centre - Suite 1600
900 South Second Avenue
Minneapolis, MN 55402-3319

COPY MAILED

OCT 0 1 2004

OFFICE OF PETITIONS

In re Application of :
Kevin I. Bertness, et al. :
Application No. 10/388,855 : ON PETITION
Filed: March 14, 2003 :
Attorney Docket No. C382.12-0068 :

This is a decision on the petition, filed October 1, 2004, under 37 CFR 1.313(c)(2) to withdraw the above-identified application from issue after payment of the issue fee.

The petition is **GRANTED**.

The above-identified application is withdrawn from issue for consideration of a submission under 37 CFR 1.114 (request for continued examination). See 37 CFR 1.313(c)(2).

Petitioner is advised that the issue fee paid on August 16, 2004 in the above-identified application cannot be refunded. If, however, the above-identified application is again allowed, petitioner may request that it be applied towards the issue fee required by the new Notice of Allowance. [1]

Telephone inquiries relating to this decision should be directed to the undersigned at (703) 305-9220.

The application is being referred to Technology Center AU 2858 for further processing of the request for continued examination under 37 CFR 1.114 filed October 1, 2004.

Sherry D. Brinkley
Petitions Examiner
Office of Petitions
Office of the Deputy Commissioner
for Patent Examination Policy

[1]The request to apply the issue fee to the new Notice may be satisfied by completing and returning the new Issue Fee Transmittal Form PTOL-85(b), which includes the following language thereon: "Commissioner for Patents is requested to apply the Issue Fee and Publication Fee (if any) or re-apply any previously paid issue fee to the application identified above." Petitioner is advised that, whether a fee is indicated as being due or not, the Issue Fee Transmittal Form **must** be completed and timely submitted to avoid abandonment. Note the language in bold text on the first page of the Notice of Allowance and Fee(s) Due (PTOL-85).

UNITED STATES PATENT AND TRADEMARK OFFICE

COMMISSIONER FOR PATENTS
UNITED STATES PATENT AND TRADEMARK OFFICE
P.O. BOX 1450
ALEXANDRIA, VA 22313-1450
www.uspto.gov

MUETING, RAASCH & GEBHARDT, P.A.
P.O. BOX 581415
MINNEAPOLIS MN 55458

COPY MAILED
JUN 17 2004
OFFICE OF PETITIONS

Applicant: Zhan et al.
Appl. No.: 10/388,857
Filing Date: March 14, 2003
Title: ELLIPSOMETRY METHODS AND APPARATUS USING SOLID IMMERSION TUNNELING
Attorney Docket No.: 110.01310120
Pub. No.: US 2003/0227623 A1
Pub. Date: December 11, 2003

This is a decision on the request for corrected patent application publication under 37 CFR 1.221(b), filed on January 7, 2004 for the above-identified application.

The request is granted-in-part.

The corrected patent application publication will be published in due course and will only include corrections for errors made by the Office.

A patent application publication is based on the application papers as originally filed, according to 37 CFR 1.215(a), which says the following, in part:

> (a) . . . The patent application publication will be based upon the application papers deposited on the filing date of the application, as well as the executed oath or declaration submitted to complete the application . . . The patent application publication will not include any amendments, including preliminary amendments, unless applicant supplies a copy of the application containing the amendment pursuant to paragraph (c) of this section.

37 CFR 1.221(b) is applicable "only when the Office makes a material mistake which is apparent from Office records." The instant request includes mistakes that are not the fault of the Office, which will not be corrected by a corrected publication made by the Office.

Specifically, the errors in paragraph [0064], line 3 and paragraph [0067], line 13 will not be corrected as the symbol (Ψ) in the application as filed is too small and fuzzy (copy of page 18 enclosed), thus it is not apparent from the Office records.

Applicants have been advised to file applications having cleaner text with sufficient clarity and

contrast to permit reproduction to avoid errors in the patent application publication process. See 37 CFR 1.52.

The applicant is advised that a "request for republication of an application previously published" may be filed under 37 CFR 1.221(a). Such a request for republication "must include a copy of the application in compliance with the Office's electronic filing system requirements and be accompanied by the publication fee set forth in § 1.18(d) and the processing fee set forth in § 1.17(i)." If the request for republication does not comply with the electronic filing system requirements, the republication will not take place and the publication fee set forth in § 1.18(d) will be refunded. The processing fee will be retained.

Any request for republication under 37 CFR 1.221(a), should be submitted via the EFS system and questions or request for reconsideration of this decision, should be addressed as follows:

By mail to: Box PGPUB
Commissioner for Patents
P.O. Box 1450
Alexandria, VA 22313-1450

By facsimile: 703-872-9306

Inquiries relating to this matter may be directed to Mark Polutta at (703) 308-8122 (voice) or (703) 746-3465 (facsimile).

Mark O. Polutta
Office of Patent Legal Administration
Office of the Deputy Commissioner
for Patent Examination Policy

Enclosure: Page 18 of the specification

UNITED STATES PATENT AND TRADEMARK OFFICE

Commissioner for Patents
United States Patent and Trademark Office
P.O. Box 1450
Alexandria, VA 22313-1450
www.uspto.gov

FISH & RICHARDSON
225 FRANKLIN ST.
BOSTON MA 02110

COPY MAILED

MAY 2 5 2004

OFFICE OF PETITIONS

In re Application of
Ganesh Venkataraman et al
Application No. 10/388,868
Filed: March 14, 2003
Attorney Docket No. 14131-021001

: DECISION ON PETITION
: UNDER 37 CFR 1.78(a)(6)

This is a decision on the petition under 37 CFR 1.78(a)(6), filed January 20, 2004, to accept an unintentionally delayed claim under 35 U.S.C. §119(e) for the benefit of prior-filed provisional Application No. 60/389,000, filed June 12, 2002.

The petition is **Granted.**

A petition under 37 CFR 1.78(a)(6) is only applicable to those applications filed on or after November 29, 2000. Further, the petition is appropriate only after expiration of the period specified in 37 CFR 1.78(a)(5)(ii) and must be filed during the pendency of the nonprovisional application. In addition, the petition must be accompanied by:

(1) the surcharge set forth in 37 CFR 1.17(t);

(2) a statement that the entire delay between the date the claim was due under 37 CFR 1.78(a)(5)(ii) and the date the claim was filed was unintentional; and

(3) the reference to the prior-filed provisional application supplied in an application data sheet (ADS)(37 CFR 1.76) or as an amendment in the first sentence of the specification following the title. *See* 35 U.S.C. 119(e) and 37 CFR 1.78(a)(5)(iii). The Commissioner may require additional information where there is a question whether the delay was unintentional.

The instant pending nonprovisional application was filed on March 14, 2003. Intermediate Application No. 10/244,805 was filed within twelve months of the filing date of the prior-filed provisional application, Application No. 60/389,000, which was filed on June 12, 2002, for which priority is claimed. A reference to the prior-filed provisional application has been included in an amendment to the first sentence of the specification following the title.

The instant nonprovisional application was filed after November 29, 2000, and the claim for priority herein is submitted after expiration of the period specified in 37 CFR 1.78(a)(5)(ii). Also, the reference to the prior-filed provisional application was submitted during the pendency of the nonprovisional application for which the benefit is sought. *See* 35 U.S.C. §119(e). Accordingly, having found that the instant petition satisfies the conditions of 37 CFR 1.78(a)(6) for acceptance of an unintentionally delayed claim for priority under 35 U.S.C. §119(e), the petition to accept an unintentionally delayed claim of benefit to prior-filed provisional Application No. 60/389,000 is granted.

The granting of the petition to accept the delayed benefit claim to the prior-filed application under 37 CFR 1.78(a)(6) should not be construed as meaning that the instant application is entitled to the benefit of the filing date of the prior-filed application. In order for the instant application to be entitled to the benefit of the prior-filed application, all other requirements under 35 U.S.C. §119(e) and 37 CFR 1.78(a)(4) and (a)(5) must be met. Similarly, the fact that the corrected Filing Receipt accompanying this decision on petition includes the prior-filed application should not be construed as meaning that applicant is entitled to the claim for benefit of priority to the prior-filed application noted thereon. Accordingly, the examiner will, in due course, consider this benefit claim and determine whether the instant application is entitled to the benefit of the earlier filing date.

A corrected Filing Receipt, which includes the priority claim to the prior-filed provisional application, accompanies this decision on petition.

Any inquiries concerning this decision may be directed to Karen Creasy at (703) 305-8859.

The examiner of Technology Center AU 1632 will consider applicant's entitlement to claim benefit of priority under 35 U.S.C. §119(e) to prior-filed provisional Application No. 60/389,000, filed June 12, 2002.

Karen Creasy

Karen Creasy
Petitions Examiner
Office of Petitions
Office of the Deputy Commissioner
for Patent Examination Policy

ATTACHMENT: Corrected Filing Receipt

UNITED STATES PATENT AND TRADEMARK OFFICE

Commissioner for Patents
United States Patent and Trademark Office
P.O. Box 1450
Alexandria, VA 22313-1450
www.uspto.gov

LOWRIE, LANDO & ANASTASI, LLP
ONE MAIN STREET, SUITE 1100
CAMBRIDGE MA 02142

COPY MAILED
SEP 24 2008

In re Application of	:	
Venkataraman et al.	:	
Application No. 10/388,868	:	DECISION ON PETITION
Filed: March 14, 2003	:	
Attorney Docket No. M2050-701219	:	

This is a decision on the petition under 37 CFR § 1.78(a)(3), filed August 25, 2008, that is properly treated under 37 CFR §§ 1.78(a)(3) and 1.78(a)(6) to accept an unintentionally delayed claim under 35 U.S.C. §§ 120 and 119(e) for the benefit of priority to the prior-filed nonprovisional and provisional applications set forth in the concurrently filed amendment.

The petition is **DISMISSED** .

A petition for acceptance of a claim for late priority under 37 CFR §§ 1.78(a)(3) and 1.78(a)(6) is only applicable to those applications filed on or after November 29, 2000 and after the expiration of the period specified in 37 CFR §§ 1.78(a)(2)(ii) and 1.78(a)(5)(ii). In addition, the petition under 37 CFR §§ 1.78(a)(3) and 1.78(a)(6) must be accompanied by:

(1) the reference required by 35 U.S.C. §§ 120 and 119(e) and 37 CFR §§ 1.78(a)(2)(i) and 1.78(a)(5)(i) of the prior-filed application, unless previously submitted;
(2) the surcharge set forth in § 1.17(t); and
(3) a statement that the entire delay between the date the claim was due under 37 CFR §§ 1.78(a)(2)(ii) and 1.78(a)(5)(ii) and the date the claim was filed was unintentional. The Director may require additional where there is a question whether the delay was unintentional.

The petition does not comply with item (1).

The instant application makes a priority claim to the provisional application 60/322,233 via the copending nonprovisional application 10/244,805, as set forth in the amendment to the

specification filed concurrently with the instant petition. 37 CFR 1.78(a)(5)(i) requires that any nonprovisional application claiming the benefit of one or more prior-filed provisional applications must contain or be amended to contain a reference to each such prior-filed provisional application, identifying it by the provisional application number (consisting of series code and serial number). The amendment states that the '805 application claims priority to the provisional application 60/322,233. However the '805 application does not claim priority to the '233 application. Thus the amendment is unacceptable for failing to comply with the reference requirement of 37 CFR 1.78(a)(5)(i).

Additionally, the amendment is also not acceptable as drafted since it improperly incorporates by reference the prior-filed provisional application. An incorporation by reference statement added after an application's filing date is not effective because no new matter can be added to an application after its filing date (*see* 35 U.S.C. § 132(a)). If an incorporation by reference statement is included in an amendment to the specification to add a benefit claim under 35 U.S.C. § 119(e) after the filing date of the application, the amendment would not be proper. When a benefit claim under 35 U.S.C. § 119(e) is submitted after the filing of an application, the reference to the prior application cannot include an incorporation by reference statement of the prior application. *See* Dart Industries v. Banner, 636 F.2d 684, 207 USPQ 273 (C.A.D.C. 1980). *Note* MPEP §§ 201.06(c) and 608.04(b).

Also, 37 CFR §§ 1.78(a)(3) and 1.78(a)(6) require a statement that the entire delay between the date the claim was due under 37 CFR §§ 1.78(a)(2)(ii) and 1.78(a)(5)(ii) and the date the claim was filed was unintentional. Since the statement appearing in the petition varies from the required language, the statement is being construed as the statement required by 37 CFR §§1.78(a)(3) and 1.78(a))(6). If this is not a correct reading of the statement appearing in the petition, petitioner should promptly notify the Office.

Before the petition under 37 CFR §§ 1.78(a)(3) and 1.78(a)(6) can be granted, a renewed petition and either an Application Data Sheet or a substitute amendment to correct the above matters are required. If the applicants wish to claim the priority to the provisional application 60/322,233, the priority claim in the nonprovisional '805 application must be corrected. However, if the applicants wish to claim the priority to the provisional application 60/322,232, a substitute oath/declaration would be required in addition to an Application Data Sheet or a substitute amendment.

Further correspondence with respect to this matter should be addressed as follows:

By mail: Mail Stop PETITIONS
Commissioner for Patents
Post Office Box 1450
Alexandria, VA 22313-1450

By hand: Customer Service Window
Mail Stop Petitions
Randolph Building
401 Dulany Street
Alexandria, VA 22314

By fax: (571) 273-8300
ATTN: Office of Petitions

Any questions concerning this matter may be directed to Ramesh Krishnamurthy at (571) 272-4914.

David Bucci
Petitions Examiner
Office of Petitions

UNITED STATES PATENT AND TRADEMARK OFFICE

Commissioner for Patents
United States Patent and Trademark Office
P.O. Box 1450
Alexandria, VA 22313-1450
www.uspto.gov

LOWRIE, LANDO & ANASTASI, LLP
ONE MAIN STREET, SUITE 1100
CAMBRIDGE MA 02142

MAILED

JUL 13 2009

OFFICE OF PETITIONS

In re Application of	:	
Venkataraman et al.	:	
Application No. 10/388,868	:	DECISION ON PETITION
Filed: March 14, 2003	:	
Attorney Docket No. M2050-701219	:	

This is a decision on the renewed petition , filed February 10, 2009, that is properly treated under 37 CFR §1.78(a)(6) to accept an unintentionally delayed claim under 35 U.S.C. §119(e) for the benefit of priority to the prior-filed provisional applications set forth in the concurrently filed amendment.

The petition is **DISMISSED** .

A petition for acceptance of a claim for late priority under 37 CFR §1.78(a)(6) is only applicable to those applications filed on or after November 29, 2000 and after the expiration of the period specified in 37 CFR §1.78(a)(5)(ii). In addition, the petition under 37 CFR § 1.78(a)(6) must be accompanied by:

(1) the reference required by 35 U.S.C. §119(e) and 37 CFR §1.78(a)(5)(i) of the prior-filed application, unless previously submitted;

(2) the surcharge set forth in § 1.17(t); and

(3) a statement that the entire delay between the date the claim was due under 37 CFR §1.78(a)(5)(ii) and the date the claim was filed was unintentional. The Director may require additional where there is a question whether the delay was unintentional.

The petition does not comply with item (1).

The instant application makes a priority claim to the provisional applications 60/322,233 and 60/389,000 as set forth in the amendment to the specification filed concurrently with the instant petition. The instant nonprovisional application was filed on March 14, 2003, within twelve

months of the filing date of the provisional application 60/389,000, which was filed on June 12, 2002, and for which priority is claimed. However, the instant non-provisional application was filed more than 12 months after the filing date of provisional application 60/322,233 and thus cannot properly claim the benefit of its earlier filing date under 35 USC 119(e). Thus the amendment is unacceptable for failing to comply with the reference requirement of 37 CFR 1.78(a)(5)(i).

The surcharge paid under 37 CFR 1.17(t) is unnecessary in a renewed petition and will be credited to the Deposit Account No. 50 – 2762, as authorized.

Before the petition under 37 CFR §1.78(a)(6) can be granted, a renewed petition and either a Supplemental Application Data Sheet or a substitute amendment to correct the above matters are required. The decision granting the priority claim in the parent application 10/244,805 to the provisional application 60/322,233 has been noted. If the applicants wish to claim the priority to the provisional application 60/322,233 in the instant application, it is suggested such a claim be made via the parent '805 application.

Further correspondence with respect to this matter should be addressed as follows:

By mail: Mail Stop PETITIONS
Commissioner for Patents
Post Office Box 1450
Alexandria, VA 22313-1450

By hand: Customer Service Window
Mail Stop Petitions
Randolph Building
401 Dulany Street
Alexandria, VA 22314

By fax: (571) 273-8300
ATTN: Office of Petitions

Any questions concerning this matter may be directed to Ramesh Krishnamurthy at (571) 272-4914.

David Bucci
Petitions Examiner
Office of Petitions

SPE RESPONSE FOR CERTIFICATE OF CORRECTION

Paper No.: ____

DATE : 5/22/08

TO SPE OF : ART UNIT 2611

SUBJECT : Request for Certificate of Correction for Appl. No.: 10/388899 Patent No: 7230982C2

A response is requested with respect to a request for a certificate of correction.

With respect to the change(s) requested to correct Office and/or Applicant's errors, should the patent read as shown in the certificate of correction attached herewith or the COCIN document(s), in IFW images for the above-identified patented application? No new matter should be introduced, nor should the scope or meaning of the claims be changed.

If the response is for an IFW, within 7 days, please complete and forward the response, to the employee (named below) via scanning into application images, using document code **COCX**.

If the response is for a paper file wrapper, please complete the response and forward the response with the paper file wrapper, to the employee (named below), within 7 days, to:

Certificates of Correction Branch (CofC)
South Tower - 9A22
Palm Location 7580

VIRGINIA TOLBERT
Certificates of Correction Branch
703-308-9390 ext. 113

Thank You For Your Assistance

The request for issuing the above-identified correction(s) is hereby:
Note your decision on the appropriate box.

- ☒ **Approved** — All changes apply.
- ☐ **Approved in Part** — Specify below which changes **do not** apply.
- ☐ **Denied** — State the reasons for denial below.

Comments: _____

AU 2611

SPE

2611
Art Unit

PTOL-306 (REV. 7/03)

U.S. DEPARTMENT OF COMMERCE Patent and Trademark Office

UNITED STATES PATENT AND TRADEMARK OFFICE

COMMISSIONER FOR PATENTS
UNITED STATES PATENT AND TRADEMARK OFFICE
P.O. BOX 1450
ALEXANDRIA, VA 22313-1450
www.uspto.gov

Paper No. 5

Brian M. Hoffman
FENWICK & WEST L.L.P.
Silicon Valley Center
801 California Street
Mountain View, CA 94041

MAILED

JUN 18 2004

Technology Center 2100

In re Application of:
Carey S. Nachenberg
Application No. 10/388,903
Filed: March 14, 2003
For: STREAM SCANNING THROUGH NETWORK PROXY SERVERS

DECISION ON REQUEST TO WITHDRAW AS ATTORNEY OR AGENT

This is a decision on the Request To Withdraw from Representation filed June 07, 2004.

A grantable request to withdraw as attorney of record should indicate thereon the present mailing addresses of the attorney(s) who is/are withdrawing from the record and of the applicant. The request for withdrawal must be signed by every attorney seeking to withdraw or contain a clear indication that one attorney is signing on behalf of another/others. A request to withdraw will not be approved unless at least 30 (thirty) days would remain between the date of approval and the later of the expiration date of a time to file a response or the expiration date of the maximum time period which can be extended under 37 C.F.R. § 1. 136(a). The effective date of withdrawal being the date of decision and not the date of request. See M.P.E.P. § 402.06. 37 C.F.R. § 1.36 further requires that the applicant or patent owner be notified of the withdrawal of the attorney or agent.

The request filed June 07, 2004 meets all the requirements. Accordingly the request is **GRANTED**.

All future communications from the Office will be directed to the below-listed address until otherwise notified by applicant. This correspondence address is provided by the withdrawn attorney(s). Applicant is reminded of the obligation to promptly notify the Patent and Trademark Office (Office) of any change in correspondence address to ensure receipt of all communications from the Office.

for James R. Matthews

Vincent N. Trans
Special Program Examiner
Technology Center 2100
Computer Architecture, Software, and
Information Security
703-305-9750

cc: Edward J. Radlo
SONNENSCHEIN NATH & ROSENTHAL LLP
685 Market Street, 6th Floor
San Francisco, CA 94105

UNITED STATES PATENT AND TRADEMARK OFFICE

Commissioner for Patents
United States Patent and Trademark Office
P.O. Box 1450
Alexandria, VA 22313-1450
www.uspto.gov

JANET A PIOLI
BRINKS HOFER GILSON & LIONE
PO BOX 10395
CHICAGO IL 60610

COPY MAILED

SEP 0 5 2007

OFFICE OF PETITIONS

In re Application	:	
Matthew C. Younkle	:	
Application No. 10/388,907	:	DECISION ON APPLICATION
Filed: March 13, 2003	:	FOR PATENT TERM ADJUSTMENT
Atty Docket No. 11866/4	:	

This is a decision on the "REQUEST FOR RECONSIDERATION OF PATENT TERM ADJUSTMENT PURSUANT TO 37 C.F.R. § 1.705(b)", filed January 17, 2007. Applicant request that the initial determination of patent term adjustment under 35 U.S.C. 154(b) be increased from the currently accorded zero (0) days to one hundred ninety-six (196) days.

For the reasons set forth below, a decision on the request for reconsideration of the patent term adjustment indicated on the patent is being **HELD IN ABEYANCE** until after the actual patent date.

Applicant is given two months from the issue date of the patent to request reconsideration of the patent term adjustment indicated on the patent application. Applicant may seek such reconsideration without payment of the fee. A copy of this decision should accompany applicant's written request for reconsideration.

On October 17, 2006, the Office mailed the Determination of Patent Term Adjustment under 35 U.S.C. 154(b) in the above-identified application. The Notice stated that the patent term adjustment (PTA) to date is zero (0) days. On January 17, 2007,

Applicant timely[1] submitted the instant application for patent term adjustment.

Applicant fails to state whether the patent issuing from the application is subject to a terminal disclaimer.

The Office initially determined a patent term adjustment of zero (0) days based on an adjustment of forty-nine (49) days of PTO delay pursuant to 35 U.S.C. 154(b)(1)(A)(i) and 37 C.F.R. § 1.703(a)(1), reduced by applicants' delays of two (2), six (6), four (4), and fifty-nine (59) days pursuant to 37 C.F.R. § 1.704(b). All periods of adjustment have been reviewed and found to be correct.

However, applicants assert additional PTO delay for the failure on the part of the Office to issue the patent within three years of its filing. The Office will be able to assess whether or not any additional PTA is accorded once the issue date is established.[2]

In view thereof, the correct determination of patent term adjustment at the time of the mailing of the Notice of Allowance is **zero (0) days** (49 days of PTO delay, reduced by 71 days of applicant delay).

Receipt of the $200 fee set forth in 37 C.F.R. § 1.18(e) is acknowledged.

The matter is being forwarded to the Office of Patent Publication for processing into a patent.

Telephone inquiries specific to this matter should be directed to Cliff Congo, Petitions Attorney, at (571)272-3207.

Kery A. Fries for

Nancy Johnson
Senior Petitions Attorney
Office of Petitions

---

[1] Applicant filed the application for patent term adjustment together with the payment of the issue fee.

[2] Applicant should note that if an application is entitled to an adjustment under 35 U.S.C. 154(b)(1)(B), the entire period of pendency before the Office except for periods excluded under 35 U.S.C. (b)(1)(B)(i)-(iii), and not just the period beginning three years after the actual filing date of the application, is the period of delay under 35 U.S.C. 154(b)(1)(B) in determining whether periods of delay overlap under 35 U.S.C. 154(b)(2)(A).

UNITED STATES PATENT AND TRADEMARK OFFICE

Commissioner for Patents
United States Patent and Trademark Office
P.O. Box 1450
Alexandria, VA 22313-1450
www.uspto.gov

MEDTRONIC, INC.
710 MEDTRONIC PARKWAY NE
MS-LC340
MINNEAPOLIS MN 55432-5604

COPY MAILED

NOV 03 2005

OFFICE OF PETITIONS

In re Application of :
Frans L. H. Gielen et al. :
Application No. 10/388,926 : ON PETITION
Filed: March 13, 2003 :
Attorney Docket No.: P-9491.02

This is a decision on the petition filed August 23, 2005 under 37 CFR 1.137(b),[1] to revive the above-identified application.

The petition is **GRANTED**.

This application became abandoned for failure to timely reply to the non-Final Office Action mailed February 1, 2005. A shortened statutory period of three months was set for replying to the non-Final Office Action. No extensions of time having been requested, this application became abandoned May 3, 2005. Subsequent to the filing of the instant petition, the Notice of Abandonment was mailed on August 26, 2005.

This matter is being referred to Technology Center 3762 for appropriate action on the amendment filed August 23, 2005.

Telephone inquiries concerning this matter should be directed to the undersigned Petitions Attorney at (571) 272-3212.

Patricia Faison-Ball
Senior Petitions Attorney
Office of Petitions

---

[1]Effective December 1, 1997, the provisions of 37 CFR 1.137(b) now provide that where the delay in reply was unintentional, a petition may be filed to revive an abandoned application or a lapsed patent pursuant to 37 CFR 1.137(b). A grantable petition filed under the provisions of 37 CFR 1.137(b) must be accompanied by:

(1) the required reply, unless previously filed. In a nonprovisional application abandoned for failure to prosecute, the required reply may be met by the filing of a continuing application. In a nonprovisional application filed on or after June 8, 1995, and abandoned for failure to prosecute, the required reply may also be met by the filing of a request for continued examination in compliance with § 1.114. In an application or patent, abandoned or lapsed for failure to pay the issue fee or any portion thereof, the required reply must be the payment of the issue fee or any outstanding balance thereof. In an application abandoned for failure to pay the publication fee, the required reply must include payment of the publication fee.

(2) the petition fee as set forth in 37 CFR 1.17(m);

(3) a statement that the entire delay in filing the required reply from the due date for the reply until the filing of a grantable petition pursuant to 37 CFR 1.137(b) was unintentional. The Commissioner may required additional information where there is a question whether the delay was unintentional; and

(4) any terminal disclaimer (and fee as set forth in 37 CFR 1.20(d)) required pursuant to 37 CFR 1.137(c)).

UNITED STATES PATENT AND TRADEMARK OFFICE

Commissioner for Patents
United States Patent and Trademark Office
P.O. Box 1450
Alexandria, VA 22313-1450
www.uspto.gov

DANIEL D. CHAPMAN
112 EAST PECAN STREET
SUITE 2100
SAN ANTONIO, TX 78205

COPY MAILED
JUL 0 7 2004
OFFICE OF PETITIONS

In re Application of
C. Brown Lingamfelter
Application No. 10/388,951
Filed: March 14, 2003
Attorney Docket No. P-6515.01 (CONT2)

: DECISION GRANTING PETITION
: UNDER 37 CFR 313(c)(2)

This is a decision on the petition, filed July 2, 2004, under 37 CFR 1.313(c)(2) to withdraw the above-identified application from issue after payment of the issue fee.

The petition is **GRANTED**.

The above-identified application is withdrawn from issue for consideration of a submission under 37 CFR 1.114 (request for continued examination). See 37 CFR 1.313(c)(2).

Petitioner is advised that the issue fee paid in the above-identified application cannot be refunded. If, however, the above-identified application is again allowed, petitioner may request that it be applied towards the issue fee required by the new Notice of Allowance.[1]

Telephone inquiries should be directed to the undersigned at (703) 305-8680.

Upon receipt of the file in the Office of Petitions, the file will be forwarded to Technology Center AU 3728 for processing of the request for continued examination under 37 CFR 1.114 and for consideration of the concurrently filed Information Disclosure Statement.

Frances Hicks
Petitions Examiner
Office of Petitions
Office of the Deputy Commissioner
for Patent Examination Policy

---

[1] The request to apply the issue fee to the new Notice may be satisfied by completing and returning the new Issue Fee Transmittal Form PTOL-85(b), which includes the following language thereon: "Commissioner for Patents is requested to apply the Issue Fee and Publication Fee (if any) or re-apply any previously paid issue fee to the application identified above." Petitioner is advised that, whether a fee is indicated as being due or not, the Issue Fee Transmittal Form **must** be completed and timely submitted to avoid abandonment. Note the language in bold text on the first page of the Notice of Allowance and Fee(s) Due (PTOL-85).

SPE RESPONSE FOR CERTIFICATE OF CORRECTION

Paper No.: ——

DATE : 10/22/08

TO SPE OF : ART UNIT 1656

SUBJECT : Request for Certificate of Correction for Appl. No.: 10/388963 Patent No.: 7288382B2

Please respond to this request for a certificate of correction within 7 days.

FOR IFW FILES:

Please review the requested changes/corrections as shown in the **COCIN** document(s) in the IFW application image. No new matter should be introduced, nor should the scope or meaning of the claims be changed.

Please complete the response (see below) and forward the completed response to scanning using document code **COCX**.

FOR PAPER FILES:

Please review the requested changes/corrections as shown in the attached certificate of correction. Please complete this form (see below) and forward it with the file to:

Certificates of Correction Branch (CofC)
South Tower - 9A22
Palm Location 7580

Virginia Tolbert
Certificates of Correction Branch
703-308-9390 ext. 113

Thank You For Your Assistance

The request for issuing the above-identified correction(s) is hereby:
Note your decision on the appropriate box.

- ☐ **Approved** — All changes apply.
- ☒ **Approved in Part** — Specify below which changes **do not** apply.
- ☐ **Denied** — State the reasons for denial below.

Comments: The change at col 52, line 26 is incorrect. The correct line number is 36.

SPE — 1656 Art Unit

UNITED STATES PATENT AND TRADEMARK OFFICE

COMMISSIONER FOR PATENTS
UNITED STATES PATENT AND TRADEMARK OFFICE
P.O. BOX 1450
ALEXANDRIA, VA 22313-1450
www.uspto.gov

Paper No. 5

COPY MAILED

DEC 04 2003

OFFICE OF PETITIONS

TOWNSEND AND TOWNSEND AND CREW, LLP
TWO EMBARCADERO CENTER
EIGHTH FLOOR
SAN FRANCISCO CA 94111-3834

In re Application of	:
Phillps and Breillatt	: DECISION ACCORDING STATUS
Application No. 10/388,964	: UNDER 37 CFR 1.47(a)
Filed: 14 March, 2003	:
Atty Dkt No. 5818	:

This is in response to the petition filed under 37 CFR 1.47(a) on 18 November, 2003.

The petition is **GRANTED**.

Petitioner has shown that the non-signing inventor has refused to join in the filing of the above-identified application after having been provided with the application papers. Specifically, petitioners have shown that the non-signing inventor, Catherine Phillips was provided a copy of the application papers but has refused via e-mail to execute the declaration.

The above-identified application and papers have been reviewed and found in compliance with 37 CFR 1.47(a). This application is hereby accorded Rule 1.47(a) status.

As provided in Rule 1.47(a), this Office will forward notice of this application's filing to the non-signing inventor at the address given in the Declaration. Notice of the filing of this application will also be published in the Official Gazette.

The correspondence address has been changed as indicated in the Application Data Sheet, filed on 18 November, 2003.

After this decision is mailed, the application will be forwarded to the Office of Initial Patent Examination for further processing.

Telephone inquiries related to this decision should be directed to the undersigned at 703-308-6918.

D Wood

Douglas I. Wood
Senior Petitions Attorney
Office of Petitions

UNITED STATES PATENT AND TRADEMARK OFFICE

Commissioner for Patents
United States Patent and Trademark Office
P.O. Box 1450
Alexandria, VA 22313-1450
www.uspto.gov

WOMBLE CARYLE SANDRIDGE & RICE PLLC
ONE WEST FOURTH STREET
WINSTON-SALEM NC 27101

COPY MAILED
DEC 14 2006
OFFICE OF PETITIONS

In re Application of	:	
PHILLIPS	:	
Application No. 10/388,964	:	DECISION ON PETITION
Filed: March 14, 2003	:	TO WITHDRAW
Attorney Docket No. VET-1050-UT	:	FROM RECORD
	:	

This is a decision on the Request to Withdraw as attorney or agent of record under 37 C.F.R. § 1.36(b), filed February 13, 2006.

The request is **NOT APPROVED** as moot.

A review of the file record indicates that the power of attorney to Carl B. Massey of WOMBLE CARYLE SANDRIDGE & RICE PLLC has been revoked by the assignee of the patent application on November 22, 2006. Accordingly, the request to withdraw under 37 C.F.R. § 1.36(b) is moot.

All future communications from the Office will continue to be directed to the below-listed address until otherwise notified by applicant.

Telephone inquires concerning this decision should be directed to the undersigned at 571-272-7253.

Monica A. Graves
Petitions Examiner
Office of Petitions

cc: **BIOTECHNOLOGY LAW GROUP**
C/O PORTFOLIOIP
PO BOX 52050
MINNEAPOLIS MN 55402

SPE RESPONSE FOR CERTIFICATE OF CORRECTION

Paper No.: _____

DATE : May 24, 2006

TO SPE OF : ART UNIT 2833

SUBJECT : Request for Certificate of Correction for Appl. No.: 10/388966 Patent No.: 7,018,246

Please respond to this request for a certificate of correction within 7 days.

Please review the requested changes/corrections as shown in the **COCIN** document(s) in the IFW application image. No new matter should be introduced, nor should the scope or meaning of the claims be changed.

Please complete the response (see below) and forward the completed response to scanning using document code **COCX**.

Magdalene Talley

Certificates of Correction Branch

703-308-9390 ext. 116

Thank You For Your Assistance

The request for issuing the above-identified correction(s) is hereby:

Note your decision on the appropriate box.

- ☒ **Approved** — **All** changes apply.
- ☐ **Approved in Part** — Specify below which changes **do not** apply.
- ☐ **Denied** — State the reasons for denial below.

Comments: ~~pa~~ A-PE filed on 5/23/03 belongs to 10/385966 and not 10/388966. Inventor name is different. The paper has wrong Sr No.

T Patel — SPE

2833/39 — Art Unit

UNITED STATES PATENT AND TRADEMARK OFFICE

Commissioner for Patents
United States Patent and Trademark Office
P.O. Box 1450
Alexandria, VA 22313-1450
www.uspto.gov

UNITED STATES SURGICAL,
A DIVISION OF TYCO HEALTHCARE GROUP LP
195 MCDERMOTT ROAD
NORTH HAVEN CT 06473

COPY MAILED

FEB 15 2007

OFFICE OF PETITIONS

In re Application of Milliman, et al. Application No. 10/388,969 Filed: March 13, 2003 Attorney Docket No. 2474CON2 (203-2454CON2)	DECISION ON PETITION UNDER 37 CFR 1.78(a)(3)

This is a decision on the petition under 37 CFR 1.78(a)(3), filed April 27, 2006 (certificate of mailing date April 24, 2006), to accept an unintentionally delayed claim under 35 U.S.C. § 120 for the benefit of priority to the prior-filed nonprovisional application set forth in the amendment filed with the petition.

The petition is **GRANTED**.

A petition for acceptance of a claim for late priority under 37 CFR 1.78(a)(3) is only applicable to those applications filed on or after November 29, 2000. Further, the petition is appropriate only after the expiration of the period specified in 37 CFR 1.78(a)(2)(ii). In addition, the petition under 37 CFR 1.78(a)(3) must be accompanied by:

(1) the reference required by 35 U.S.C. § 120 and 37 CFR 1.78(a)(2)(i) of the prior-filed application, unless previously submitted;

(2) the surcharge set forth in § 1.17(t); and

(3) a statement that the entire delay between the date the claim was due under 37 CFR 1.78(a)(2)(ii) and the date the claim was filed was unintentional. The Director may require additional information where there is a question whether the delay was unintentional.

All of the above requirements having been satisfied, the late claim for priority under 35 U.S.C. § 120 is accepted as being unintentionally delayed.

The granting of the petition to accept the delayed benefit claim to the prior-filed application under 37 CFR 1.78(a)(3) should not be construed as meaning that this application is entitled

to the benefit of the prior-filed application. In order for this application to be entitled to the benefit of the prior-filed application, all other requirements under 35 U.S.C. § 120 and 37 CFR 1.78(a)(1) and (a)(2) must be met. Similarly, the fact that the corrected Filing Receipt accompanying this decision on petition includes the prior-filed application should not be construed as meaning that applicant is entitled to the claim for benefit of priority to the prior-filed application noted thereon. Accordingly, the examiner will, in due course, consider this benefit claim and determine whether the application is entitled to the benefit of the earlier filing date.

A corrected Filing Receipt, which includes the priority claim to the prior-filed nonprovisional application, accompanies this decision on petition.

Any inquiries concerning this decision may be directed to the undersigned at (571) 272-3230. All other inquiries concerning either the examination procedures or status of the application should be directed to the Technology Center.

This application is being forwarded to Technology Center Art Unit 3734 for consideration by the examiner of applicant's entitlement to claim benefit of priority under 35 U.S.C. § 120 to the prior-filed application.

Shirene Wilis Brantley

Shirene Wilis Brantley
Senior Petitions Attorney
Office of Petitions

ATTACHMENT: Corrected Filing Receipt

CC: CARTER, DELUCA, FARRELL & SCHMIDT, LLP
445 BROAD HOLLOW RAOD, SUITE 225
MELVILLE, NY 11747

UNITED STATES PATENT AND TRADEMARK OFFICE

UNITED STATES DEPARTMENT OF COMMERCE
United States Patent and Trademark Office
Address: COMMISSIONER FOR PATENTS
P.O. Box 1450
Alexandria, Virginia 22313-1450
www.uspto.gov

APPL NO.	FILING OR 371 (c) DATE	ART UNIT	FIL FEE REC'D	ATTY.DOCKET NO	DRAWINGS	TOT CLMS	IND CLMS
10/388,969	03/13/2003	3734	1816	2474 CON 2	24	53	3

CONFIRMATION NO. 7716

CORRECTED FILING RECEIPT

OC000000022338341

50855
UNITED STATES SURGICAL,
A DIVISION OF TYCO HEALTHCARE GROUP LP
195 MCDERMOTT ROAD
NORTH HAVEN, CT 06473

Date Mailed: 02/05/2007

Receipt is acknowledged of this regular Patent Application. It will be considered in its order and you will be notified as to the results of the examination. Be sure to provide the U.S. APPLICATION NUMBER, FILING DATE, NAME OF APPLICANT, and TITLE OF INVENTION when inquiring about this application. Fees transmitted by check or draft are subject to collection. Please verify the accuracy of the data presented on this receipt. **If an error is noted on this Filing Receipt, please mail to the Commissioner for Patents P.O. Box 1450 Alexandria Va 22313-1450. Please provide a copy of this Filing Receipt with the changes noted thereon. If you received a "Notice to File Missing Parts" for this application, please submit any corrections to this Filing Receipt with your reply to the Notice. When the USPTO processes the reply to the Notice, the USPTO will generate another Filing Receipt incorporating the requested corrections (if appropriate).**

Applicant(s)

Keith Milliman, Bethel, CT;
Kevin Sniffen, Danbury, CT;
David A. Nicholas, Trumbull, CT;
Scott E. Manzo, Shelton, CT;
Peter Hinchliffe, New Haven, CT;

Power of Attorney: The patent practitioners associated with Customer Number **50855**.

Domestic Priority data as claimed by applicant

This application is a CON of 09/882,245 06/14/2001 ABN
which is a CON of 09/410,817 10/01/1999 ABN
which is a CIP of 09/256,260 02/23/1999 PAT 6,083,234
which is a CIP of 08/877,701 06/17/1997 PAT 6,024,748
which is a CIP of 08/685,385 07/23/1996 PAT 5,707,380

Foreign Applications

If Required, Foreign Filing License Granted: 06/16/2003

The country code and number of your priority application, to be used for filing abroad under the Paris Convention, is US10/388,969

Projected Publication Date: Not Applicable

Non-Publication Request: No

Early Publication Request: No

Title

ANASTOMOSIS INSTRUMENT AND METHOD FOR PERFORMING SAME

Preliminary Class

606

PROTECTING YOUR INVENTION OUTSIDE THE UNITED STATES

Since the rights granted by a U.S. patent extend only throughout the territory of the United States and have no effect in a foreign country, an inventor who wishes patent protection in another country must apply for a patent in a specific country or in regional patent offices. Applicants may wish to consider the filing of an international application under the Patent Cooperation Treaty (PCT). An international (PCT) application generally has the same effect as a regular national patent application in each PCT-member country. The PCT process **simplifies** the filing of patent applications on the same invention in member countries, but **does not result** in a grant of "an international patent" and does not eliminate the need of applicants to file additional documents and fees in countries where patent protection is desired.

Almost every country has its own patent law, and a person desiring a patent in a particular country must make an application for patent in that country in accordance with its particular laws. Since the laws of many countries differ in various respects from the patent law of the United States, applicants are advised to seek guidance from specific foreign countries to ensure that patent rights are not lost prematurely.

Applicants also are advised that in the case of inventions made in the United States, the Director of the USPTO must issue a license before applicants can apply for a patent in a foreign country. The filing of a U.S. patent application serves as a request for a foreign filing license. The application's filing receipt contains further information and guidance as to the status of applicant's license for foreign filing.

Applicants may wish to consult the USPTO booklet, "General Information Concerning Patents" (specifically, the section entitled "Treaties and Foreign Patents") for more information on timeframes and deadlines for filing foreign patent applications. The guide is available either by contacting the USPTO Contact Center at 800-786-9199, or it can be viewed on the USPTO website at http://www.uspto.gov/web/offices/pac/doc/general/index.html.

For information on preventing theft of your intellectual property (patents, trademarks and copyrights), you may wish to consult the U.S. Government website, http://www.stopfakes.gov. Part of a Department of Commerce initiative, this website includes self-help "toolkits" giving innovators guidance on how to protect intellectual property in specific countries such as China, Korea and Mexico. For questions regarding patent enforcement issues, applicants may call the U.S. Government hotline at 1-866-999-HALT (1-866-999-4158).

LICENSE FOR FOREIGN FILING UNDER
Title 35, United States Code, Section 184
Title 37, Code of Federal Regulations, 5.11 & 5.15

GRANTED

The applicant has been granted a license under 35 U.S.C. 184, if the phrase "IF REQUIRED, FOREIGN FILING LICENSE GRANTED" followed by a date appears on this form. Such licenses are issued in all applications where the conditions for issuance of a license have been met, regardless of whether or not a license may be required as

set forth in 37 CFR 5.15. The scope and limitations of this license are set forth in 37 CFR 5.15(a) unless an earlier license has been issued under 37 CFR 5.15(b). The license is subject to revocation upon written notification. The date indicated is the effective date of the license, unless an earlier license of similar scope has been granted under 37 CFR 5.13 or 5.14.

This license is to be retained by the licensee and may be used at any time on or after the effective date thereof unless it is revoked. This license is automatically transferred to any related applications(s) filed under 37 CFR 1.53(d). This license is not retroactive.

The grant of a license does not in any way lessen the responsibility of a licensee for the security of the subject matter as imposed by any Government contract or the provisions of existing laws relating to espionage and the national security or the export of technical data. Licensees should apprise themselves of current regulations especially with respect to certain countries, of other agencies, particularly the Office of Defense Trade Controls, Department of State (with respect to Arms, Munitions and Implements of War (22 CFR 121-128)); the Bureau of Industry and Security, Department of Commerce (15 CFR parts 730-774); the Office of Foreign Assets Control, Department of Treasury (31 CFR Parts 500+) and the Department of Energy.

NOT GRANTED

No license under 35 U.S.C. 184 has been granted at this time, if the phrase "IF REQUIRED, FOREIGN FILING LICENSE GRANTED" DOES NOT appear on this form. Applicant may still petition for a license under 37 CFR 5.12, if a license is desired before the expiration of 6 months from the filing date of the application. If 6 months has lapsed from the filing date of this application and the licensee has not received any indication of a secrecy order under 35 U.S.C. 181, the licensee may foreign file the application pursuant to 37 CFR 5.15(b).

UNITED STATES PATENT AND TRADEMARK OFFICE

COMMISSIONER FOR PATENTS
UNITED STATES PATENT AND TRADEMARK OFFICE
P.O. BOX 1450
ALEXANDRIA, VA 22313-1450
www.uspto.gov

MAY 18 2004

MAILED

MAY 18 2004

OFFICE OF THE DIRECTOR
TC 3600

Michael A. Mann
Nexsen Pruet Jacobs & Pollard, LLC
PO Drawer 2426
Columbia, SC 29202-2426

In re application of
Carl S. Holland et al.
Application No. 10/388,972
Filed: March 14, 2003
For: CABLE ARRAY ROBOT FOR MATERIAL HANDLING

DECISION ON PETITION TO MAKE SPECIAL (APPLICANT'S AGE)

This is a decision on the petition submitted on March 14, 2003 under 37 CFR 1.102 (c) to make the above-identified application special under the accelerated examination procedure set forth in MPEP 708.02, Section IV: Applicant's Age.

The petition is **GRANTED**.

An application may be accorded special status upon the filing of a petition providing evidence showing that the applicant is at least 65 years old. Such a showing may be provided by evidence such as a birth certificate or a statement from the applicant.

The evidence submitted with the petition is a declaration signed by Mr. Carl S. Holland indicating that he is at least 65 years of age.

The examiner is directed (1) to make an interference search for possible interfering applications, (2) to promptly examine this application out of turn, and (3) if any interfering application is discovered, to examine such application simultaneously and state in the first official letter of such application that it is being taken out of turn because of a possible interference.

Petitioner is advised that this application will continue to be special, throughout its entire prosecution and pendency, including interference or appeal, if any, only if petitioner makes a prompt ***bona fide*** effort, in response to each Office action, to place the application in condition for allowance, even if it is necessary to conduct an interview with the examiner to accomplish this purpose.

SUMMARY: Petition to Make Special **GRANTED**.

Steven N. Meyers
Special Programs Examiner
Technology Center 3600
(703) 308-3868

SNM/vdb: 5/5/04

UNITED STATES PATENT AND TRADEMARK OFFICE

COMMISSIONER FOR PATENTS
UNITED STATES PATENT AND TRADEMARK OFFICE
P.O. BOX 1450
ALEXANDRIA, VA 22313-1450
www.uspto.gov

HESLIN ROTHENBERG FARLEY & MESITI PC
5 COLUMBIA CIRCLE
ALBANY, NY 12203

COPY MAILED

FEB 23 2004

OFFICE OF PETITIONS

In re Application of :
Burdick, et al. :
Application No. 10/388,997 :
Filed: March 14, 2003 :
Attorney Docket No. **0047.082** :

DECISION GRANTING PETITION

This is a decision on the petition filed August 7, 2003 (certificate of mailing dated August 5, 2003), requesting that the above-identified application retain the presently accorded a filing date of March 14, 2003, with page 12 of the specification as part of the original disclosure and for clarification of the drawings filed in the application.

On March 14, 2003, the above-identified application was filed. On June 9, 2003, the Office of Initial Patent Examination mailed a "Notice to File Omitted Items in Nonprovisional Application " (the "Notice"), stating that the application had been accorded a filing date of May 14, 2003, however, page 12 of the specification appeared to have been omitted as were Figures 5,6,7,8,9,10,and 11 as purportedly described in the specification.

In response, on August 7, 2003, applicants filed the present petition and a copy of the Office date-stamped postcard showing the twelve pages of the specification as being received on March 14, 2003, along with four pages of drawings. Page 12 of the specification was found among the original. Further, the specification only described Figures 1, 2, 3A, 3B, 3C, 3D, 4A, 4B, and 4C and these figures (encompassed in four pages of drawings) were found among the original application papers. The specification for above-cited application does not describe any figures labeled 5,6,7,8,9,10, or 11 as alleged by the Notice. It is concluded that the Notice was incorrect as it references a page of the specification that was located among the original application papers and references figures that were not described in the specification for this application. Therefore, the application, including page 12 of the specification was complete on filing and entitled to the presently accorded filing date of March 14, 2003.

Accordingly, the petition is granted.

The petition fee of $130.00 will be refunded in due course.

The application file is being returned to the Office of Initial Patent Examination for further processing with the presently accorded filing date of March 14, 2003, using the twelve pages encompassing the specification and Figures 1,2,3A, 3B, 3C, 3D, 4A, 4B, and 4C encompassed in four pages of drawings filed March 14, 2003.

Any inquiries related to this decision should be directed to the undersigned at (703)305-0010

Kenya A. McLaughlin

Kenya A. McLaughlin
Petitions Attorney
Office of Petitions

UNITED STATES PATENT AND TRADEMARK OFFICE

COMMISSIONER FOR PATENTS
UNITED STATES PATENT AND TRADEMARK OFFICE
P.O. BOX 1450
ALEXANDRIA, VA 22313-1450
www.uspto.gov

MARK J. YOUNG
MCGUIRE WOODS, LLP
SUITE 3300
50 NORTH LAURA STREET
JACKSONVILLE, FL 32202

COPY MAILED

AUG 0 6 2003

OFFICE OF PETITIONS

In re Application of	:	
Thompson, et al.	:	DECISION GRANTING
Application No. 10/388,999	:	PETITION
Filed: March 12, 2003	:	
Attorney Docket No. 2038542-0001	:	

This is a decision on the petition under 37 CFR 1.10(c), filed June 9, 2003, requesting that the above-identified application be accorded a filing date of March 12, 2003, rather than the presently accorded filing date of March 14, 2003.

Petitioners allege that the application was deposited in Express Mail service on March 12, 2003. In support, the petition is accompanied by a copy of Express Mail Receipt No. EU796226435US (the same Express Mail number found on the original application papers located in the official file) showing a "date in" of March 12, 2003.

In view of the above, the petition is **GRANTED**.

Accordingly, the application is entitled to a filing date of March 12, 2003.

Since the instant petition has been granted, no petition fee is required. The $130.00 petition fee, submitted June 9, 2003, will be refunded by treasury check.

The application is being returned to the Office of Initial Patent Examination for processing with a filing date of March 12, 2003 and issuance of a corrected filing receipt. Thereafter, the application will be forwarded to Technology Center 3600 for examination in due course.

Telephone inquiries concerning this matter may be directed to the undersigned at (703) 306-9200.

Edward J. Tannouse
Petitions Attorney
Office of Petitions
United States Patent and Trademark Office

UNITED STATES PATENT & TRADEMARK OFFICE
Washington, D.C. 20231

REQUEST FOR PATENT FEE REFUND

1 Date of Request: 8-5-03

2 Serial/Patent # 10/388,999

	3 Please refund the following fee(s):	4 PAPER NUMBER	5 DATE FILED	6 AMOUNT
	Filing			$
	Amendment			$
	Extension of Time			$
	Notice of Appeal/Appeal			$
X	Petition	3	6-9-03	$130
	Issue			$
	Cert of Correction/Terminal Disc.			$
	Maintenance			$
	Assignment			$
	Other			$

7 TOTAL AMOUNT OF REFUND: $130

8 TO BE REFUNDED BY:

X	Treasury Check
	Credit Deposit A/C #:

9 [ ][ ]--[ ][ ][ ][ ]

10 REASON:

	Overpayment
	Duplicate Payment
X	No Fee Due (Explanation):

PTO error

11 REFUND REQUESTED BY:

TYPED/PRINTED NAME: E. Tannouse

TITLE: Pet. Atty.

SIGNATURE: [signature]

PHONE: 306-9208

OFFICE: 4700

****

THIS SPACE RESERVED FOR FINANCE USE ONLY:

APPROVED: Allen Kelly

DATE: 8/6/03

Instructions for completion of this form appear on the back. After completion, attach white and yellow copies to the official file and mail or hand-carry to:

Office of Finance
Refund Branch
Crystal Park One, Room 802B

FORM PTO 1577
(01/90)

UNITED STATES PATENT & TRADEMARK OFFICE
Washington, D.C. 20231

REQUEST FOR PATENT FEE REFUND

1 Date of Request: 8-5-03

2 Serial/Patent # 10/388,999

3 Please refund the following fee(s):		4 PAPER NUMBER	5 DATE FILED	6 AMOUNT
	Filing			$
	Amendment			$
	Extension of Time			$
	Notice of Appeal/Appeal			$
X	Petition	3	6-9-03	$130
	Issue			$
	Cert of Correction/Terminal Disc.			$
	Maintenance			$
	Assignment			$
	Other			$

7 TOTAL AMOUNT OF REFUND $130

8 TO BE REFUNDED BY:

X Treasury Check

Credit Deposit A/C #:

9 [ ][ ] -- [ ][ ][ ][ ]

10 REASON:

	Overpayment
	Duplicate Payment
X	No Fee Due (Explanation):

PTO error

11 REFUND REQUESTED BY:

TYPED/PRINTED NAME: E. Tannonce TITLE: Pet. Atty.

SIGNATURE: [signature] PHONE: 306-9200

OFFICE: 4700

****

THIS SPACE RESERVED FOR FINANCE USE ONLY:

APPROVED: [signature] DATE: 8/6/03

Instructions for completion of this form appear on the back. After completion, attach white and yellow copies to the official file and mail or hand-carry to:

Office of Finance
Refund Branch
Crystal Park One, Room 802B

FORM PTO 1577
(01/90)

7/18/03

UNITED STATES PATENT AND TRADEMARK OFFICE

Commissioner for Patents
United States Patent and Trademark Office
P.O. Box 1450
Alexandria, VA 22313-1450
www.uspto.gov

Paper No. 6

R. Neil Sudol
714 Colorado Avenue
Bridgeport CT 06605-1601

COPY MAILED

JUL 1 8 2003

OFFICE OF PETITIONS

In re Application of	:	
Rashid Bashir, Nicholas A. Peppas, James Z. Hilt, and Amit K. Gupta	:	
Application No. 10/389,023	:	DECISION GRANTING
Filed: March 14, 2003	:	PETITION
Attorney Docket No. P27-049	:	
Title: MICROSCALE SENSOR ELEMENT AND RELATED DEVICE AND METHOD OF MANUFACTURE	:	

This is a decision on the "petition to record filing date", filed June 24, 2003, which is properly treated as a petition under 37 CFR §1.1.53(b), requesting the application, including figures one through twenty-seven (1 - 27) be accorded a filing date of March 14, 2003 as part of the original disclosure.

The application was deposited on March 14, 2003. However, on May 20, 2003, Initial Patent Examination Division mailed a notice stating that the application had NOT been accorded a filing date, and advising applicants that the application was deposited without drawings, and a filing date would be accorded when the drawings were received. The notice further indicated that the oath or declaration was missing.

In response, on June 24, 2003, applicants filed the present petition. The petition is further accompanied by a copy of figures one through twenty-seven (1 - 27), along with a copy of applicants' postcard receipt acknowledging receipt of twenty-

seven (27) sheets of drawings containing figures one through twenty-seven (1 - 27) in the United States Patent and Trademark Office (Office) on March 14, 2003. Applicants request that the application, including figures one through twenty-seven (1 - 27) be accorded a filing date of March 14, 2003.

Upon review of the record, the above-mentioned figures have not been located among the application papers. However, the evidence is convincing that the application papers deposited on March 14, 2003 included figures one through twenty-seven (1 - 27), and these twenty-seven sheets of drawings were subsequently misplaced in the Office.

Therefore, the application, including figures one through twenty-seven (1 - 27), was complete on filing and entitled to a filing date of March 14, 2003 as part of the original disclosure.

Accordingly, the petition is **GRANTED**.

The portion of the notice pertaining to the missing drawings mailed May 20, 2003 was sent in error. Therefore, no petition fee is necessary. The petition fee of $130 will be refunded to petitioner's Deposit Account.

The application file is being returned to the Office of Initial Patent Examination for further processing with a filing date of March 14, 2003, using the original application papers filed on that date, as well as figures one through twenty-seven (1 - 27) submitted on June 24, 2003.

Petitioner has also submitted a declaration, which will not be entered as it cannot be accepted due to unsigned and undated alterations[1]. The period for reply has not been restarted.

Any inquiries related to this decision should be directed to Petitions Attorney Paul Shanoski at (703) 305-0011.

Beverly Flanagan
Supervisory Petitions Examiner
Office of Petitions
United States Patent and Trademark Office

---

1 See MPEP 605.04(a).

#5

UNITED STATES PATENT AND TRADEMARK OFFICE

COMMISSIONER FOR PATENTS
UNITED STATES PATENT AND TRADEMARK OFFICE
P.O. BOX 1450
ALEXANDRIA, VA 22313-1450
www.uspto.gov

MAILED

JAN 0 8 2004

TECHNOLOGY CENTER 2100

Paper No. 5

Woodcock Washburn LLP
One Liberty Place - 46th Floor
Philadelphia, PA 19103

In re Application of Kim B. EDWARDS, et al Application No. 10/389,027 Filed: March 13, 2003 For: INTERCHANGEABLE CARTRIDGE DATA STORAGE SYSTEM FOR DEVICES PERFORMING DIVERSE FUNCTIONS	: : : : :	DECISION ON REQUEST FOR WITHDRAWAL AS ATTORNEY

This is a decision on the Request To Withdraw from Representation filed October 16, 2003.

A grantable request to withdraw as attorney of record should indicate thereon the present mailing addresses of the attorney(s) who is/are withdrawing from the record and of the applicant. The request for withdrawal must be signed by every attorney seeking to withdraw or contain a clear indication that one attorney is signing on behalf of another/others. A request to withdraw will not be approved unless at least 30 (thirty) days would remain between the date of approval and the later of the expiration date of a time to file a response or the expiration date of the maximum time period which can be extended under 37 C.F.R. § 1. 136(a). The effective date of withdrawal being the date of decision and not the date of request. See M.P.E.P. § 402.06. 37 C.F.R. § 1.36 further requires that the applicant or patent owner be notified of the withdrawal of the attorney or agent.

The request is **GRANTED**.

All future communication from the Office will be directed to the below-listed address until otherwise notified by applicant. This correspondence address is provided by the withdrawn attorney(s). Applicant is reminded of the obligation to promptly notify the U.S. Patent and Trademark Office (the Office) of any change in correspondence address to ensure receipt of all communications from the Office.

For Vincent N. Trans
Special Programs Examiner
Technology Center 2100
Computer Architecture, Software and Information Security
(703) 305-9750

cc: Iomega Corporation
10955 Vista Sorrento Parkway
San Diego, CA 92130

SPE RESPONSE FOR CERTIFICATE OF CORRECTION

Paper No.: _____

DATE : _____12/12/04_____

TO SPE OF : ART UNIT____1661____

SUBJECT : Request for Certificate of Correction on Patent No.: _____PP14,512_____

A response is requested with respect to the accompanying request for a certificate of correction.

Please complete this form and return with file, within 7 days to:
Certificates of Correction Branch - PK 3-910
Palm location **7590** - Tel. No. 305-8201

With respect to the change(s) requested, correcting Office and/or Applicant's errors, should the patent read as shown in the certificate of correction? No new matter should be introduced, nor should the scope or meaning of the claims be changed.

Please see COCIN dated 4-8-04 in the table of contents in IFW.

Thank You For Your Assistance

Diana T. Rose
Certificates of Correction Branch

The request for issuing the above-identified correction(s) is hereby:
Note your decision on the appropriate box.

- ☑ **Approved** — **All** changes apply.
- ☐ **Approved in Part** — Specify below which changes **do not** apply.
- ☐ **Denied** — State the reasons for denial below.

Comments:

BRUCE R. CAMPBELL, PH.D
SUPERVISORY PATENT EXAMINER
TECHNOLOGY CENTER 1600

Bruce Campbell
SPE

1654
Art Unit

REIDEC.

UNITED STATES PATENT AND TRADEMARK OFFICE

COMMISSIONER FOR PATENTS
UNITED STATES PATENT AND TRADEMARK OFFICE
P.O. BOX 1450
ALEXANDRIA, VA 22313-1450
www.uspto.gov

MAR 15 2004

WK
PAPER NO.

In re Application of	:	
Douglas R. Hicks et al.	:	DECISION
Serial No. 10/389,072	:	ON
Filed: March 14, 2003	:	PETITION
For: APPARATUS FOR MAKING CIGARETTE WITH BURN RATE MODIFICATION	:	UNDER 708.02,VIII

This is in response to the petition filed May 22, 2003 requesting that the above-identified application be granted Special Status under Section 708.02 (VIII) of the MPEP and 37 CFR 1.102(d) (fee paid).

The petition has been considered and found to to comply with the requirements set forth under the above-noted section. Accordingly, the petition is **GRANTED.**

JMStone

Jacqueline M. Stone, Director
Technology Center 1700
Chemical and Materials Engineering

John F. Salazar
Middleton & Reutlinger
2500 Brown & Williamson Tower
Louisville, KY 40202

UNITED STATES PATENT AND TRADEMARK OFFICE

COMMISSIONER FOR PATENTS
UNITED STATES PATENT AND TRADEMARK OFFICE
P.O. BOX 1450
ALEXANDRIA, VA 22313-1450
www.uspto.gov
DIW 07-03

Paper No. 3

MYERS BIGEL SIBLEY & SAJOVEC
PO BOX 37428
RALEIGH NC 27627

COPY MAILED

JUL 29 2003

OFFICE OF PETITIONS

In re Application of	:	
Boetje et al.	:	DECISION GRANTING
Application No. 10/389,089	:	PETITION
Filed: 14 March, 2003	:	
Attorney Docket No. 9400-5	:	

This is a decision on the petition, styled under 37 CFR 1.10(e), filed on 27 May, 2003, which is treated as a petition under 37 CFR 1.10(c) requesting that the above-identified application be accorded a filing date of 14 March, 2003, rather than the presently accorded filing date of 17 March, 2003.

The petition is **GRANTED**.

Petitioner alleges that the application was deposited in Express Mail service on 14 March, 2003. In support, on 27 May, 2003, petitioner supplied a copy of Express Mail Label No. EV193586257US (the same Express Mail number found on the itemized transmittal sheet accompanying the original application papers located in the official file). The "date-in" on the Express Mail Label, has not been completed. The Express Mail label, however, contains an official USPS postmark dated 14 March, 2003. Petitioners have also provided a printout from the USPS.com Internet website showing that the mailing bearing the above-identified Express Mail number was accepted by the USPS on 14 March, 2003.

In view of the above, the petition is granted.

The petition fee of $130.00 is unnecessary and will be credited to counsel's deposit account, No. 50-0220, as authorized in the present petition.

The application is being forwarded to the Office of Initial Patent Examination for correction of the filing date to **14 March, 2003**. Thereafter, the application will be forwarded to Technology Center 2600 for examination in due course.

Telephone inquiries specific to this matter should be directed to the undersigned at (703) 308-6918.

D Wood

Douglas I. Wood
Senior Petitions Attorney
Office of Petitions

UNITED STATES PATENT AND TRADEMARK OFFICE

Commissioner for Patents
United States Patent and Trademark Office
P.O. Box 1450
Alexandria, VA 22313-1450
www.uspto.gov

GAUTHIER & CONNORS, LLP
225 FRANKLIN STREET
BOSTON MA 02110

COPY MAILED

MAR 2 1 2006

OFFICE OF PETITIONS

In re Application of	:	
Sun SASONGKO	:	
Application No. 10/389,111	:	ON PETITION
Filed: March 14, 2003	:	
Attorney Docket No. 6172	:	

This is a decision on the petition under 37 CFR 1.137(b), filed on February 22, 2006, to revive the above-identified application.

The petition is **GRANTED**.

The above-identified application became abandoned for failure to reply within the meaning of 37 CFR 1.113 in a timely manner to the final Office action mailed on May 3, 2005, which set a shortened statutory period for reply of three (3) months. Petitioner has obtained a three (3) month extension of time under the provisions of 37 CFR 1.136(a). Accordingly, the application became abandoned, by operation of law, on November 4, 2005. A Notice of Abandonment was mailed on November 15, 2005.

The petition satisfies the requirements of 37 CFR 1.137(b) in that petitioner has supplied (1) the reply in the form of an amendment, a Request for Continued Examination (RCE) under 37 CFR 1.114, and the $395 filing fee; (2) the petition fee of $750; and (3) an adequate statement of unintentional delay. Accordingly, the reply to the final Office action of May 3, 2005 is accepted as having been unintentionally delayed.

37 CFR 1.137(b)(3) requires a statement that the entire delay in filing the required reply from the due date for the reply until the filing of a grantable petition pursuant to 37 CFR 1.137(b) was unintentional. Since the statement contained in the petition varies from the language required by 37 CFR 1.137(b)(3), the statement contained in the petition is being construed as the statement required by 37 CFR 1.137(b)(3). Petitioner must notify the Office if this is **not** a correct interpretation of the statement contained in the petition.

Telephone inquiries concerning this decision should be directed to Anatoly Vortman at (571) 272-6051, or in his absence to the undersigned at (571) 272-7099.

Application No. 10/389,111

The application file is being referred to Technology Center AU 1711 for appropriate action on the RCE and concurrently filed amendment(s).

David Bucci
Petitions Examiner
Office of Petitions

UNITED STATES PATENT AND TRADEMARK OFFICE

Commissioner for Patents
United States Patent and Trademark Office
P.O. Box 1450
Alexandria, VA 22313-1450
www.uspto.gov

GAUTHIER & CONNORS, LLP
225 FRANKLIN STREET
SUITE 2300
BOSTON MA 02110

COPY MAILED
JAN 13 2010

In re Application of	:	
SASONGKO, SUN	:	
Application No. 10/389,111	:	ON PETITION
Filed: 03/14/2003	:	
Attorney Docket No. 6172	:	

This is a decision on the petition under the unintentional provisions of 37 CFR 1.137(b), filed May 7, 2009, to revive the above-identified application.

The petition is **GRANTED**.

The application became abandoned for failure to timely file a reply within the meaning of 37 CFR 1.113 to the final Office action of June 16, 2008. No extensions of time pursuant to the provisions of 37 CFR 1.136(a) were obtained. Accordingly, the application became abandoned on September 17, 2008. A Notice of Abandonment was mailed on March 2, 2009.

The petition satisfies the requirements of 37 CFR 1.137(b) in that petitioner has supplied (1) the reply in the form of a Request for Continued Examination (RCE), the RCE fee, and the submission required by 37 CFR 1.114; (2) the petition fee; and (3) a proper statement of unintentional delay.

This application is being referred to Technology Center AU 1796 for processing of the RCE and for appropriate action by the Examiner in the normal course of business on the amendment submitted in accordance with 37 CFR 1.114.

Inquiries concerning this decision should be directed to the undersigned at (571) 272-3211.

Christina Tartera Donnell

Christina Tartera Donnell
Senior Petitions Attorney
Office of Petitions

06-12-03

0300

OIPE JC134
JUN 1 1 2003
PATENT & TRADEMARK OFFICE

DOCKET NO.: ISCB-0041 **PATENT**

IN THE UNITED STATES PATENT AND TRADEMARK OFFICE

In Re Application of:

Janice K. Archbold

Confirmation No.: 4203

Application No.: 10/389,116

Group Art Unit: Unknown

Filed: March 14, 2003

Examiner: Unknown

For: Systems And Methods For Automatically Managing WorkFlow For Transcription Services

EXPRESS MAIL LABEL NO: EV 160974276 US
DATE OF DEPOSIT: June 10, 2003

EV160974276US

Commissioner for Patents
P.O. Box 1450
Alexandria, VA 22313-1450

PETITION TO ESTABLISH PRIOR RECEIPT IN THE P.T.O. OF ITEMS CONSIDERED OMITTED BY THE P.T.O. AND RESPONSE TO "NOTICE OF INCOMPLETE APPLICATION

This is in response to the Notice of Incomplete Application mailed for this application on May 23, 2003.

1. Applicant submits herewith:

   A. A copy of the Notice of Incomplete Application

   B. A true and correct copy of page 1 of the specification of the above-referenced patent application filed March 14, 2003 wherein the "Cross Reference to Related Applications" section recites "This application is a continuation of U.S. patent application no. 09/694,884, filed October 24, 2000, which is a continuation of U.S. patent application no. 09/041,839, filed March 12, 1998, now abandoned, which claims priority under 35 U.S.C. § 119(e) from U.S. provisional patent application no. 60/040,753, filed March 13, 1997, the disclosure of which is hereby incorporated herein by reference."

   C. A true and correct copy of Figure 1 as filed on October 24 2000 with parent application Serial No. 09/694,884.

   D. A Combined Declaration and Power of Attorney, executed by the inventor.

   E. One new sheet of formal drawing comprising Figure 1

06/13/2003 HDEHESS1 00000046 10389116
02 FC:1460 130.00 OP

2. Although an additional copy of Figure 1 was not supplied with the filing of Application No. 10/389,116, the '116 application claims priority from Application Serial No. 09/694,884. Figure 1 was submitted upon filing of the '184 application. As Applicants have incorporated the '884 application in its entirety, Applicants respectfully assert that the '116 application is entitled to a filing date of March 14, 2003, which is the original date of filing.

3. In accordance with the requirements of the Notice of June 5, 1996, 61 Fed. Reg. 30,041-30,046, (see MPEP, § 601.01(d), 7th Edition) applicant hereby:

   A. Petitions under 37 § 1.53(e) for a review of the determination that the items in issue were omitted;
   B. Submits the petition fee under 37 § 1.17(i) and
   C. Submits the attached evidence of the deposit of the items in issue.

4. It is respectfully requested that, upon grant of the petition under 37 § 1.53(e), the petition fee be refunded by crediting Deposit Account No. 23-3050.

5. In the event that this Petition is not granted, Applicants hereby accept that the filing date of the above-identified application will be the date of receipt by the United States Patent Office of all the items required in the Notice of Incomplete Application which are submitted herewith and referred to above.

Fee Payment

Submitted herewith is:

1. Late Surcharge for filing Executed Oath/Declaration ($130.00)

2. Petition Fee under 37 CFR 1.17(h) ($130.00)

☒ A check in the amount of **$260.00** is attached. Please charge any deficiency or credit any overpayment to Deposit Account No. 23-3050.

☐ Please charge Deposit Account No. 23-3050 the amount of **$130.00**. This sheet is attached in duplicate.

☒ The Commissioner is hereby authorized to charge payment of the above fees associated with this communication or credit any overpayment to Deposit Account No. 23-3050. This sheet is attached in duplicate.

Request for Refund of Provisional Petition Fee under 37 § 1.182

Upon grant of the petition under 37 § 1.53(e) and the determination by the P.T.O. that the omitted items in issue were filed with the original papers filed for this application, applicant respectfully requests that the petition fee under 37 § 1.182 be refunded by crediting Deposit Account No. 23-3050

Date: June 10, 2003

Joseph R. Condo
Registration No. 42,431

Woodcock Washburn LLP
One Liberty Place - 46th Floor
Philadelphia PA 19103
Telephone: (215) 568-3100
Facsimile: (215) 568-3439

UNITED STATES PATENT AND TRADEMARK OFFICE

Commissioner for Patents
United States Patent and Trademark Office
P.O. Box 1450
Alexandria, VA 22313-1450
www.uspto.gov

MEDTRONIC MINIMED INC.
18000 DEVONSHIRE STREET
NORTHRIDGE CA 91325-1219

COPY MAILED

DEC 0 1 2005

OFFICE OF PETITIONS

In re Application of	:	
Bobroff et al.	:	
Application No. 10/389,132	:	DECISION ON PETITION
Filed: March 14, 2003	:	UNDER 37 CFR 1.78(a)(3)
Attorney Docket No. PF00416 DIV	:	

This is a decision on the petition under 37 CFR 1.78(a)(3), filed October 10, 2005, to accept an unintentionally delayed claim under 35 U.S.C. § 120 for the benefit of priority to prior-filed Nonprovisional Application No. 08/795,968, filed February 5, 1997, as set forth in the amendment filed concurrently with the instant petition.

The petition is **DISMISSED**.

A petition for acceptance of a claim for late priority under 37 CFR 1.78(a)(3) is only applicable to those applications filed on or after November 29, 2000. Further, the petition is appropriate only after the expiration of the period specified in 37 CFR 1.78(a)(2)(ii). In addition, the petition under 37 CFR 1.78(a)(3) must be accompanied by:

(1) the reference required by 35 U.S.C. § 120 and 37 CFR 1.78(a)(2)(i) of the prior-filed application(s), unless previously submitted;
(2) the surcharge set forth in § 1.17(t); and
(3) a statement that the entire delay between the date the claim was due under 37 CFR 1.78(a)(2)(ii) and the date the claim was filed was unintentional. The Commissioner may require additional information where there is a question whether the delay was unintentional.

The instant petition does not comply with item (1) above.

A reference to add the above-noted, prior-filed application on page one following the first sentence of the specification has been included in a concurrently filed amendment. However, the amendment is not acceptable as drafted since it improperly incorporates by reference the prior-filed applications. Petitioner's attention is directed to Dart Industries v. Banner, 636 F.2d 684, 207 USPQ 273 (C.A.D.C. 1980), where the court drew a distinction between a permissible 35 U.S.C. § 120 statement and the impermissible introduction of new matter by way of incorporation by reference in a 35 U.S.C. § 120 statement. The court specifically stated:

> Section 120 merely provides a mechanism whereby an application becomes entitled to benefit of the filing date of an earlier application disclosing the

> same subject matter. Common subject matter must be disclosed, in both applications, either specifically or by an express incorporation-by-reference of prior disclosed subject matter. Nothing in section 120 itself operates to carry forward any disclosure from an earlier application. In re deSeversky, supra at 674, 177 USPQ at 146-147. Section 120 contains no magical disclosure-augmenting powers able to pierce new matter barriers. It cannot, therefore, "limit" the absolute and express prohibition against new matter contained in section 251.

In order for the incorporation by reference statement to be effective as a proper safeguard against the omission of a portion of a prior application, the incorporation by reference statement must be included in the specification-as-filed, or in an amendment specifically referred to in an oath or declaration executing the application. *See* In re deSeversky, *supra*. *Note also* MPEP 201.06(c).

Accordingly, before the petition under 37 CFR 1.78(a)(3) can be granted, a substitute amendment[1] deleting the incorporation by reference statement, along with a renewed petition under 37 CFR 1.78(a)(3), is required. No further petition fee is necessary.

Further correspondence with respect to this matter should be addressed as follows:

By mail:	Mail Stop PETITIONS Commissioner for Patents Post Office Box 1450 Alexandria, VA 22313-1450
By hand:	Customer Window located at: U.S. Patent and Trademark Office Customer Service Window Randolph Building 401 Dulany Street Alexandria, VA 22314
By fax:	(571) 273-8300 ATTN: Office of Petitions

Any questions concerning this matter may be directed to the undersigned at (571) 272-3206.

Liana Chase
Petitions Examiner
Office of Petitions

[1] *Note* 37 CFR 1.121

UNITED STATES PATENT AND TRADEMARK OFFICE

Commissioner for Patents
United States Patent and Trademark Office
P.O. Box 1450
Alexandria, VA 22313-1450
www.uspto.gov

MEDTRONIC MINIMED INC.
18000 DEVONSHIRE STREET
NORTHRIDGE CA 91325-1219

COPY MAILED

DEC 2 3 2005

OFFICE OF PETITIONS

In re Application of	:	
Bobroff et al.	:	
Application No. 10/389,132	:	DECISION GRANTING PETITION
Filed: March 14, 2003	:	UNDER 37 CFR 1.78(a)(3)
Attorney Docket No. PF00416 DIV	:	

This is a decision on the renewed petition under 37 CFR 1.78(a)(3), filed December 13, 2005, to accept an unintentionally delayed claim under 35 U.S.C. § 120 for the benefit of priority to prior-filed nonprovisional Application No. 08/795,968, filed February 5, 1997, as set forth in the amendment filed concurrently with the instant petition.

The petition is **GRANTED**.

A petition for acceptance of a claim for late priority under 37 CFR 1.78(a)(3) is only applicable to those applications filed on or after November 29, 2000. Further, the petition is appropriate only after the expiration of the period specified in 37 CFR 1.78(a)(2)(ii). In addition, the petition under 37 CFR 1.78(a)(3) must be accompanied by:

(1) the reference required by 35 U.S.C. § 120 and 37 CFR 1.78(a)(2)(i) of the prior-filed application, unless previously submitted;
(2) the surcharge set forth in § 1.17(t); and
(3) a statement that the entire delay between the date the claim was due under 37 CFR 1.78(a)(2)(ii) and the date the claim was filed was unintentional. The Commissioner may require additional information where there is a question whether the delay was unintentional.

The instant nonprovisional application was filed after November 29, 2000, and the claim herein for the benefit of priority to the prior-filed nonprovisional application is submitted after expiration of the period specified by 37 CFR 1.78(a)(2)(ii). Therefore, this is a proper petition under 37 CFR 1.78(a)(3).

The petition complies with the requirements for a grantable petition under 37 CFR 1.78(a)(3) in that (1) a reference to the above-noted, prior-filed nonprovisional application has been included in an amendment to the first sentence of the specification following the title, as provided by 37 CFR 1.78(a)(2)(iii); (2) the surcharge fee required by 37 CFR 1.17(t) has been previously submitted; and (3) the petition contains a proper statement of unintentional delay. Accordingly, having found that the instant petition for acceptance of an unintentionally delayed claim for the benefit of priority under 35 U.S.C. § 120 to the above-noted, prior-filed nonprovisional application satisfies the conditions of 37 CFR 1.78(a)(3), the petition is granted.

The granting of the petition to accept the delayed benefit claim to the prior-filed application under 37 CFR 1.78(a)(3) should not be construed as meaning that the instant application is entitled to the benefit of the prior-filed application. In order for the instant application to be entitled to the benefit of the prior-filed application, all other requirements under 35 U.S.C. § 120 and 37 CFR 1.78(a)(1) and (a)(2) must be met. Similarly, the fact that the corrected Filing Receipt accompanying this decision on petition includes the prior-filed application should not be construed as meaning that applicant is entitled to the claim for benefit of priority to the prior-filed application noted thereon. Accordingly, the examiner will, in due course, consider this benefit claim and determine whether the instant application is entitled to the benefit of the earlier filing date.

A corrected Filing Receipt, which includes the priority claim to the prior-filed nonprovisional application, accompanies this decision on petition.

Any inquiries concerning this decision may be directed to Paralegal Liana Chase at (571) 272-3282.

This matter is being referred to Technology Center Art Unit 3763 for appropriate action on the amendment filed December 13, 2005, including consideration by the examiner of applicant's entitlement to claim benefit of priority under 35 U.S.C. § 120 to the prior-filed nonprovisional application.

Liana Chase
Petitions Examiner
Office of Petitions

ATTACHMENT: Corrected Filing Receipt

UNITED STATES PATENT AND TRADEMARK OFFICE

Commissioner for Patents
United States Patent and Trademark Office
P.O. Box 1450
Alexandria, VA 22313-1450
www.uspto.gov

WILIAM J. MASON, ESQ.
MACCORD MASON PLLC
P.O. BOX 1489
WRIGHTSVILLE BEACH NC 28480

COPY MAILED

DEC 14 2004

OFFICE OF PETITIONS

In re Application of	:	
John F. Farrell et al	:	
Application No. 10/389,147	:	ON PETITION
Filed: March 15, 2003	:	
Attorney Docket No. None	:	

This is a decision on the petition under 37 CFR 1.137(b), filed September 21, 2004, to revive the above-identified application.

The petition is **GRANTED**.

The above-identified application became abandoned for failure to submit the issue fee in a timely manner in reply to the Notice of Allowance mailed April 21, 2004, which set a statutory period for reply of three (3) months. Accordingly, the above-identified application became abandoned on July 22, 2004.

Telephone inquiries concerning this decision should be directed to the undersigned at (571) 272-3208.

The application file is being referred to the Office of Patent Publication.

Karen Creasy

Karen Creasy
Petitions Examiner
Office of Petitions
Office of the Deputy Commissioner
for Patent Examination Policy

UNITED STATES PATENT AND TRADEMARK OFFICE

Commissioner for Patents
United States Patent and Trademark Office
P.O. Box 1450
Alexandria, VA 22313-1450
www.uspto.gov

SCHWEGMAN, LUNDBERG & WOESSNER, P.A.
P.O. BOX 2938
MINNEAPOLIS MN 55402

MAILED

AUG 13 2009

OFFICE OF PETITIONS

In re Application of
YAO, Zhi-Xing et al.
Application No. 10/389,189
Filed: March 14, 2003
Attorney Docket No. **1941.013US1**

DECISION ON PETITION
TO WITHDRAW
FROM RECORD

This is a decision on the Request to Withdraw as attorney or agent of record under 37 C.F.R. § 1.36(b), filed June 22, 2009 and re-submitted July 29, 2009.

The request is **APPROVED**.

A grantable request to withdraw as attorney/agent of record must be signed by every attorney/agent seeking to withdraw or contain a clear indication that one attorney is signing on behalf of another/others. The Office requires the practitioner(s) requesting withdrawal to certify that he, she, or they have: (1) given reasonable notice to the client, prior to the expiration of the response period, that the practitioner(s) intends to withdraw from employment; (2) delivered to the client or a duly authorized representative of the client all papers and property (including funds) to which the client is entitled; and (3) notified the client of any responses that may be due and the time frame within which the client must respond, pursuant 37 CFR 10.40(c).

The request was signed by Monique Shonka on behalf of all attorneys of record who are associated with customer No. 21186. All attorneys/agents associated with the Customer Number 21186 have been withdrawn. Applicant is reminded that there is no attorney of record at this time.

The request to change the correspondence address of record is not acceptable as the requested correspondence address is not that of: (1) the first named signing inventor; or (2) an intervening assignee of the entire interest under 37 C.F.R 3.71. All future communications from the Office will be directed to the first named signing inventor at the first copied address below until otherwise properly notified by the applicant.

There is an outstanding Office action mailed May 11, 2009 that requires a reply from the applicant.

Telephone inquiries concerning this decision should be directed to Tredelle Jackson at 571-272-2783.

Tredelle D. Jackson
Paralegal Specialist
Office of Petitions

cc: **ZHI-XING YAO**
1415 N. OAK ST., NO. 604
ARLINGTON VA 22209

cc: **LAURENT LECANU**
MCGILL UNIVERSITY HEALTH CENTRE
AT BIOTECHNOLOGY RESEARCH INSITITUTE
6100 ROYALMOUNT AVENUE
MONTREAL QUEBEC H4P 2RS
CANADA

UNITED STATES PATENT AND TRADEMARK OFFICE

Commissioner for Patents
United States Patent and Trademark Office
P.O. Box 1450
Alexandria, VA 22313-1450
www.uspto.gov

Paper No.

ROY A. EKSTRAND
STE 150
3158 REDHILL AVE.
COSTA MESA CA 92626

COPY MAILED

JAN 0 2 2008

OFFICE OF PETITIONS

In re Application of	:	
Lindsay Palmer	:	DECISION ON PETITION
Application No. 10/389,208	:	
Filed: March 14, 2003	:	
Attorney Docket No. 03536	:	

This is a decision on the PETITION FOR REVIVE UNDER 37 CFR 1.137(b) filed August 13, 2007.

The petition under § 1.137(b) is **GRANTED**.

The above-identified application became abandoned effective September 14, 2006 for failure to file a response to the final rejection mailed June 13, 2006. A courtesy Notice of Abandonment was mailed on January 12, 2007.

In response, on August 13, 2007, applicant filed the instant petition. The petition included the required reply in the form of a Notice of Appeal (and Notice of Appeal) fee, the petition fee and a statement of unintentional delay. 37 CFR 1.137(b)(3) requires a statement that "the entire delay in filing the required reply from the due date for the reply until the filing of a grantable petition pursuant to 37 CFR 1.137(b) was unintentional." The statement appearing in the petition varies from the language required by 37 CFR 1.137(b)(3). The statement is being construed as the required statement. Petitioner must notify the Office if this is not a correct interpretation of the statement appearing in the petition. No terminal disclaimer is required. Petitioner has met the requirements for revival pursuant to 37 CFR 1.137(b).

Petitioner is given two (2) months from the mailing date of this decision to file the appeal brief (accompanied by the fee required by 37 CFR 41.20(b)(2)). The time period for filing the appeal brief may be extended under 37 CFR 1.136.

Technology Center AU 2612 has been advised of this decision. The application file is, thereby, forwarded to the Technology Center to await receipt of the Appeal Brief.

Telephone inquiries related to this decision should be directed to the undersigned at (571) 272-3219.

Nancy Johnson
Senior Petitions Attorney
Office of Petitions

UNITED STATES PATENT AND TRADEMARK OFFICE

Commissioner for Patents
United States Patent and Trademark Office
P.O. Box 1450
Alexandria, VA 22313-1450
www.uspto.gov
DIW Mar-07

MOORE & VAN ALLEN PLLC
P.O. BOX 13706
Research Triangle Park NC 27709

COPY MAILED

MAR 28 2007

OFFICE OF PETITIONS

In re Application of	:	
Minsek et al.	:	
Application No. 10/389,214	:	DECISION GRANTING PETITION
Filed: 14 March, 2003	:	
Atty Docket No. 020732-90.629	:	

This is a decision on in reference to the letter filed on 5 December, 2006, concerning the petition filed on petition filed on 25 April, 2006, under 37 CFR 1.182, to change the second named inventor's last name.

The Office apologizes for the delay in responding to the petition.

The petition is **GRANTED**.

The last name of the second inventor will be changed from "Murphy" to **-Rath--**.

Petitioner has presented a certified copy of a court order for name change.

Receipt of the court order reflecting the inventor's current name is acknowledged. The inventor's name has been corrected in Office records. A corrected Filing Receipt is enclosed for petitioner's records.

Petitioner is reminded that the fee for a petition under 37 CFR 1.182 is $400.00. The balance due of $270.00 will be charged to counsel's deposit account.

Applicants are also strongly encouraged to submit an application data sheet (37 CFR 1.76) showing the new name. MPEP 605.04(c).

The application is being referred to the Technology Center for further processing.

Telephone inquiries concerning this matter may be directed to the undersigned at (571) 272-3231.

D Wood

Douglas I. Wood
Senior Petitions Attorney
Office of Petitions

Encl: Corrected Filing Receipt

UNITED STATES PATENT AND TRADEMARK OFFICE

UNITED STATES DEPARTMENT OF COMMERCE
United States Patent and Trademark Office
Address: COMMISSIONER FOR PATENTS
P.O. Box 1450
Alexandria, Virginia 22313-1450
www.uspto.gov

APPL NO.	FILING OR 371(c) DATE	ART UNIT	FIL FEE REC'D	ATTY.DOCKET NO	TOT CLMS	IND CLMS
10/389,214	03/14/2003	1756	2736	020732-90.629	24	4

CONFIRMATION NO. 2638

CORRECTED FILING RECEIPT

OC000000023131511

24239
MOORE & VAN ALLEN PLLC
P.O. BOX 13706
Research Triangle Park, NC 27709

Date Mailed: 03/27/2007

Receipt is acknowledged of this regular Patent Application. It will be considered in its order and you will be notified as to the results of the examination. Be sure to provide the U.S. APPLICATION NUMBER, FILING DATE, NAME OF APPLICANT, and TITLE OF INVENTION when inquiring about this application. Fees transmitted by check or draft are subject to collection. Please verify the accuracy of the data presented on this receipt. **If an error is noted on this Filing Receipt, please mail to the Commissioner for Patents P.O. Box 1450 Alexandria Va 22313-1450. Please provide a copy of this Filing Receipt with the changes noted thereon. If you received a "Notice to File Missing Parts" for this application, please submit any corrections to this Filing Receipt with your reply to the Notice. When the USPTO processes the reply to the Notice, the USPTO will generate another Filing Receipt incorporating the requested corrections (if appropriate).**

Applicant(s)

David W. Minsek, Pleasantville, NY;
Melissa K. Rath, Danbury, CT;
David Daniel Bernhard, Newtown, CT;
Thomas H. Baum, New Fairfield, CT;

Power of Attorney:

John Boyd--38055
Margaret Chappuis--45735

Domestic Priority data as claimed by applicant

Foreign Applications

If Required, Foreign Filing License Granted: 05/12/2003

The country code and number of your priority application, to be used for filing abroad under the Paris Convention, is
US10/389,214

Projected Publication Date: Not Applicable

Non-Publication Request: No

Early Publication Request: No

Title

Photoresist removal

Preliminary Class

PROTECTING YOUR INVENTION OUTSIDE THE UNITED STATES

Since the rights granted by a U.S. patent extend only throughout the territory of the United States and have no effect in a foreign country, an inventor who wishes patent protection in another country must apply for a patent in a specific country or in regional patent offices. Applicants may wish to consider the filing of an international application under the Patent Cooperation Treaty (PCT). An international (PCT) application generally has the same effect as a regular national patent application in each PCT-member country. The PCT process **simplifies** the filing of patent applications on the same invention in member countries, but **does not result** in a grant of "an international patent" and does not eliminate the need of applicants to file additional documents and fees in countries where patent protection is desired.

Almost every country has its own patent law, and a person desiring a patent in a particular country must make an application for patent in that country in accordance with its particular laws. Since the laws of many countries differ in various respects from the patent law of the United States, applicants are advised to seek guidance from specific foreign countries to ensure that patent rights are not lost prematurely.

Applicants also are advised that in the case of inventions made in the United States, the Director of the USPTO must issue a license before applicants can apply for a patent in a foreign country. The filing of a U.S. patent application serves as a request for a foreign filing license. The application's filing receipt contains further information and guidance as to the status of applicant's license for foreign filing.

Applicants may wish to consult the USPTO booklet, "General Information Concerning Patents" (specifically, the section entitled "Treaties and Foreign Patents") for more information on timeframes and deadlines for filing foreign patent applications. The guide is available either by contacting the USPTO Contact Center at 800-786-9199, or it can be viewed on the USPTO website at http://www.uspto.gov/web/offices/pac/doc/general/index.html.

For information on preventing theft of your intellectual property (patents, trademarks and copyrights), you may wish to consult the U.S. Government website, http://www.stopfakes.gov. Part of a Department of Commerce initiative, this website includes self-help "toolkits" giving innovators guidance on how to protect intellectual property in specific countries such as China, Korea and Mexico. For questions regarding patent enforcement issues, applicants may call the U.S. Government hotline at 1-866-999-HALT (1-866-999-4158).

LICENSE FOR FOREIGN FILING UNDER
Title 35, United States Code, Section 184
Title 37, Code of Federal Regulations, 5.11 & 5.15

GRANTED

The applicant has been granted a license under 35 U.S.C. 184, if the phrase "IF REQUIRED, FOREIGN FILING LICENSE GRANTED" followed by a date appears on this form. Such licenses are issued in all applications where the conditions for issuance of a license have been met, regardless of whether or not a license may be required as set forth in 37 CFR 5.15. The scope and limitations of this license are set forth in 37 CFR 5.15(a) unless an earlier license has been issued under 37 CFR 5.15 (b). The license is subject to revocation upon written notification. The date indicated is the effective date of the license, unless an earlier license of similar scope has been granted under 37 CFR 5.13 or 5.14.

This license is to be retained by the licensee and may be used at any time on or after the effective date thereof unless it is revoked. This license is automatically transferred to any related applications(s) filed under 37 CFR 1.53(d). This license is not retroactive.

The grant of a license does not in any way lessen the responsibility of a licensee for the security of the subject matter as imposed by any Government contract or the provisions of existing laws relating to espionage and the national security or the export of technical data. Licensees should apprise themselves of current regulations especially with respect to certain countries, of other agencies, particularly the Office of Defense Trade Controls, Department of State (with respect to Arms, Munitions and Implements of War (22 CFR 121-128)); the Bureau of Industry and Security, Department of Commerce (15 CFR parts 730-774); the Office of Foreign Assets Control, Department of Treasury (31 CFR Parts 500+) and the Department of Energy.

NOT GRANTED

No license under 35 U.S.C. 184 has been granted at this time, if the phrase "IF REQUIRED, FOREIGN FILING LICENSE

GRANTED" DOES NOT appear on this form. Applicant may still petition for a license under 37 CFR 5.12, if a license is desired before the expiration of 6 months from the filing date of the application. If 6 months has lapsed from the filing date of this application and the licensee has not received any indication of a secrecy order under 35 U.S.C. 181, the licensee may foreign file the application pursuant to 37 CFR 5.15(b).

UNITED STATES PATENT AND TRADEMARK OFFICE

COMMISSIONER FOR PATENTS
UNITED STATES PATENT AND TRADEMARK OFFICE
P.O. BOX 1450
ALEXANDRIA, VA 22313-1450
WWW.USPTO.GOV

Paper No. None

SEED INTELLECTUAL PROPERTY LAW GROUP PLLC
701 FIFTH AVENYUE, SUITE 6300
SEATTLE WA 98104-7092

COPY MAILED

AUG 0 8 2005

OFFICE OF PETITIONS

In re Application of
William L. Hunter et al.
Application No. 10/389,262
Filed: March 13, 2003
Attorney Docket No. 110129.401C12
Title: ANTI-ANGIOGENIC COMPOSITIONS AND METHODS OF USE

DECISION ON PETITION

This is a decision on the petition filed June 15, 2005, pursuant to 37 C.F.R. §1.137(b)[1], to revive the above-identified application.

The above-identified application became abandoned for failure to reply in a timely manner to the non-final Office action, mailed December 14, 2004, which set a shortened statutory period for reply of three (3) months. No response was received, and no extensions of time under the provisions of 37 C.F.R. §1.136(a) were requested. Accordingly, the above-identified application became abandoned on March 15, 2004.

37 C.F.R. §1.137(b)(3) requires a statement that the entire delay in filing the required reply from the due date for the reply until the filing of a grantable petition pursuant to 37 C.F.R. §1.137(b) was unintentional. Since the statement contained in the instant petition varies from the language required by 37 C.F.R. §1.137(b)(3), the statement contained in the instant petition is being construed as the statement required by 37

1 A grantable petition pursuant to 37 CFR 1.137(b) must be accompanied by:
(1) The reply required to the outstanding Office action or notice, unless previously filed;
(2) The petition fee as set forth in § 1.17(m);
(3) A statement that the entire delay in filing the required reply from the due date for the reply until the filing of a grantable petition pursuant to this paragraph was unintentional. The Commissioner may require additional information where there is a question whether the delay was unintentional, and;
(4) Any terminal disclaimer (and fee as set forth in § 1.20(d)) required pursuant to paragraph (d) of this section.

C.F.R. §1.137(b)(3) and petitioner must notify the Office if this is not a correct interpretation of the statement contained in the instant petition.

With the present petition, Petitioner has supplied the petition fee and a statement which is being construed as the proper statement of unintentional delay. It is noted that Petitioner filed a continuation application on June 14, 2005.

As such, this petition under 37 C.F.R. §1.137(b) is **GRANTED**.

Since this application is being revived for purposes of continuity only and since continuity has been established by this decision reviving the application, the application is again abandoned in favor of continuing Application No. 11/151,399.

It is noted that the address listed on the petition differs from the address of record. The application file does not indicate a change of correspondence address has been filed in this case, although the address given on the petition differs from the address of record. If petitioner desires to receive future correspondence regarding this application, the change of correspondence address must be submitted. A courtesy copy of this decision will be mailed to petitioner. However, all future correspondence will be directed to the address of record until such time as appropriate instructions are received to the contrary. Petitioner will not receive future correspondence related to this application unless Change of Correspondence Address, Patent Form (PTO/SB/122) is submitted for the above-identified application. For petitioner's convenience, a blank Change of Correspondence Address, Patent Form (PTO/SB/122), may be found at http://www.uspto.gov/web/forms/sb0122.pdf.

It is not apparent whether the person signing the statement of unintentional delay was in a position to have firsthand or direct knowledge of the facts and circumstances of the delay at issue. Nevertheless, such statement is being treated as having been made as the result of a reasonable inquiry into the facts and circumstances of such delay[2]. In the event that such an inquiry has not been made, petitioner must make such an inquiry. If such inquiry results in the discovery that the delay in paying the maintenance fee under 37 CFR §1.137(b) was intentional, petitioner must notify the Office.

Petitioner has also submitted a three- month extension of time. An extension of time under 37 C.F.R. §1.136 must be filed prior to the expiration of the maximum extendable period for reply[3]. Accordingly, since the $1,020 extension of time submitted with the petition on June 15, 2005 was subsequent to the maximum extendable period for reply, this fee is unnecessary and will be credited to petitioner's deposit account.

Telephone inquiries regarding *this decision* should be directed to the undersigned at

---

2 See 37 CFR 10.18(b); cf. Changes to Patent Practice and Procedure; Final Rule Notice, 62 Fed. Reg. 53131, 53178 (October 10, 1997), 1203 Off. Gaz. Pat. Office 63, 103 (October 21, 1997).
3 See In re Application of S., 8 USPQ2d 1630, 1631 (Comm'r Pats. 1988).

(571) 272-3225. All other inquiries concerning examination procedures or status of the application should be directed to the Technology Center.

Paul Shanoski
Senior Attorney
Office of Petitions
United States Patent and Trademark Office

cc: OBLON, SPIVAK, MCCLELLAND, MAIER & NEUSTADT, P.C.
1940 DUKE STREET
ALEXANDRIA, VA 22314

UNITED STATES PATENT AND TRADEMARK OFFICE

COMMISSIONER FOR PATENTS
UNITED STATES PATENT AND TRADEMARK OFFICE
P.O. BOX 1450
ALEXANDRIA, VA 22313-1450
WWW.USPTO.GOV

Paper No. None

SEED INTELLECTUAL PROPERTY LAW GROUP PLLC
701 FIFTH AVENYUE, SUITE 6300
SEATTLE WA 98104-7092

COPY MAILED

AUG 0 8 2005

OFFICE OF PETITIONS

In re Application of
William L. Hunter et al.
Application No. 10/389,262
Filed: March 13, 2003
Attorney Docket No. 110129.401C12
Title: ANTI-ANGIOGENIC COMPOSITIONS AND METHODS OF USE

DECISION ON PETITION

This is a decision on the petition filed June 15, 2005, pursuant to 37 C.F.R. §1.137(b)[1], to revive the above-identified application.

The above-identified application became abandoned for failure to reply in a timely manner to the non-final Office action, mailed December 14, 2004, which set a shortened statutory period for reply of three (3) months. No response was received, and no extensions of time under the provisions of 37 C.F.R. §1.136(a) were requested. Accordingly, the above-identified application became abandoned on March 15, 2004.

37 C.F.R. §1.137(b)(3) requires a statement that the entire delay in filing the required reply from the due date for the reply until the filing of a grantable petition pursuant to 37 C.F.R. §1.137(b) was unintentional. Since the statement contained in the instant petition varies from the language required by 37 C.F.R. §1.137(b)(3), the statement contained in the instant petition is being construed as the statement required by 37

1 A grantable petition pursuant to 37 CFR 1.137(b) must be accompanied by:
(1) The reply required to the outstanding Office action or notice, unless previously filed;
(2) The petition fee as set forth in § 1.17(m);
(3) A statement that the entire delay in filing the required reply from the due date for the reply until the filing of a grantable petition pursuant to this paragraph was unintentional. The Commissioner may require additional information where there is a question whether the delay was unintentional, and;
(4) Any terminal disclaimer (and fee as set forth in § 1.20(d)) required pursuant to paragraph (d) of this section.

C.F.R. §1.137(b)(3) and petitioner must notify the Office if this is not a correct interpretation of the statement contained in the instant petition.

With the present petition, Petitioner has supplied the petition fee and a statement which is being construed as the proper statement of unintentional delay. It is noted that Petitioner filed a continuation application on June 14, 2005.

As such, this petition under 37 C.F.R. §1.137(b) is **GRANTED**.

Express Abandonment

Since this application is being revived for purposes of continuity only and since continuity has been established by this decision reviving the application, the application is again abandoned in favor of continuing Application No. 11/151,399.

It is noted that the address listed on the petition differs from the address of record. The application file does not indicate a change of correspondence address has been filed in this case, although the address given on the petition differs from the address of record. If petitioner desires to receive future correspondence regarding this application, the change of correspondence address must be submitted. A courtesy copy of this decision will be mailed to petitioner. However, all future correspondence will be directed to the address of record until such time as appropriate instructions are received to the contrary. Petitioner will not receive future correspondence related to this application unless Change of Correspondence Address, Patent Form (PTO/SB/122) is submitted for the above-identified application. For petitioner's convenience, a blank Change of Correspondence Address, Patent Form (PTO/SB/122), may be found at http://www.uspto.gov/web/forms/sb0122.pdf.

It is not apparent whether the person signing the statement of unintentional delay was in a position to have firsthand or direct knowledge of the facts and circumstances of the delay at issue. Nevertheless, such statement is being treated as having been made as the result of a reasonable inquiry into the facts and circumstances of such delay[2]. In the event that such an inquiry has not been made, petitioner must make such an inquiry. If such inquiry results in the discovery that the delay in paying the maintenance fee under 37 CFR §1.137(b) was intentional, petitioner must notify the Office.

Petitioner has also submitted a three- month extension of time. An extension of time under 37 C.F.R. §1.136 must be filed prior to the expiration of the maximum extendable period for reply[3]. Accordingly, since the $1,020 extension of time submitted with the petition on June 15, 2005 was subsequent to the maximum extendable period for reply, this fee is unnecessary and will be credited to petitioner's deposit account.

Telephone inquiries regarding *this decision* should be directed to the undersigned at

---

2 See 37 CFR 10.18(b); cf. Changes to Patent Practice and Procedure; Final Rule Notice, 62 Fed. Reg. 53131, 53178 (October 10, 1997), 1203 Off. Gaz. Pat. Office 63, 103 (October 21, 1997).
3 See In re Application of S., 8 USPQ2d 1630, 1631 (Comm'r Pats. 1988).

(571) 272-3225. All other inquiries concerning examination procedures or status of the application should be directed to the Technology Center.

Paul Shanoski
Senior Attorney
Office of Petitions
United States Patent and Trademark Office

cc: OBLON, SPIVAK, MCCLELLAND, MAIER & NEUSTADT, P.C.
1940 DUKE STREET
ALEXANDRIA, VA 22314

UNITED STATES PATENT AND TRADEMARK OFFICE

Commissioner for Patents
United States Patent and Trademark Office
P.O. Box 1450
Alexandria, VA 22313-1450
www.uspto.gov

PILLSBURY WINTHROP LLP
INTELLECTUAL PROPERTY GROUP
SUITE 200
11682 EL CAMINO REAL
SAN DIEGO, CA 92130-2092

COPY MAILED

JAN 3 1 2006

OFFICE OF PETITIONS

In re Application of	:	
Steven A. Reese, et al.	:	
Application No. 10/389,269	:	ON PETITION
Filed: March 13, 2003	:	
Attorney Docket No. P 044182/301823	:	

This is a decision on the petition, filed January 24, 2006, under 37 CFR 1.313(c)(2) to withdraw the above-identified application from issue after payment of the issue fee.

The petition is **GRANTED**.

The above-identified application is withdrawn from issue for consideration of a submission under 37 CFR 1.114 (request for continued examination). See 37 CFR 1.313(c)(2).

Petitioner is advised that the issue fee paid on September 9, 2005, using a Certificate of Mailing or Transmission under 37 CFR 1.8 dated September 6, 2005, in the above-identified application cannot be refunded. If, however, the above-identified application is again allowed, petitioner may request that it be applied towards the issue fee required by the new Notice of Allowance. [1]

Telephone inquiries relating to this decision should be directed to the undersigned at (571) 272-3204.

The application is being forwarded to Technology Center AU 2877 for further processing of the request for continued examination under 37 CFR 1.114.

Sherry D. Brinkley
Petitions Examiner
Office of Petitions

[1]The request to apply the issue fee to the new Notice may be satisfied by completing and returning the new Issue Fee Transmittal Form PTOL-85(b), which includes the following language thereon: "Commissioner for Patents is requested to apply the Issue Fee and Publication Fee (if any) or re-apply any previously paid issue fee to the application identified above." Petitioner is advised that, whether a fee is indicated as being due or not, the Issue Fee Transmittal Form **must** be completed and timely submitted to avoid abandonment. Note the language in bold text on the first page of the Notice of Allowance and Fee(s) Due (PTOL-85).

UNITED STATES PATENT AND TRADEMARK OFFICE

Commissioner for Patents
United States Patent and Trademark Office
P.O. Box 1450
Alexandria, VA 22313-1450
www.uspto.gov

COPY MAILED

JAN 09 2007

OFFICE OF PETITIONS

Pillsbury Winthrop LLP
Intellectual Property Group
Suite 200
11682 El Camino Real
San Diego, CA 92130-2092

In re Application of	:
Reese et al.	:
Application No. 10/389,269	: DECISION ON PETITION
Filing or 371(c) Date: 03/13/2003	: UNDER 37 CFR 1.78(a)(3)
Attorney Docket No. P 044182/301823	:

This is a decision on the petition under 37 CFR 1.78(a)(3), filed September 6, 2006, to accept an unintentionally delayed claim under 35 U.S.C. § 120 for the benefit of priority to the prior-filed nonprovisional application set forth in the amendment filed with the petition.

The petition is **DISMISSED**.

A petition for acceptance of a claim for late priority under 37 CFR 1.78(a)(3) is only applicable to those applications filed on or after November 29, 2000. Further, the petition is appropriate only after the expiration of the period specified in 37 CFR 1.78(a)(2)(ii). In addition, the petition under 37 CFR 1.78(a)(3) must be accompanied by:

(1) the reference required by 35 U.S.C. § 120 and 37 CFR 1.78(a)(2)(i) of the prior-filed application, unless previously submitted;
(2) the surcharge set forth in § 1.17(t); and
(3) a statement that the entire delay between the date the claim was due under 37 CFR 1.78(a)(2)(ii) and the date the claim was filed was unintentional. The Director may require additional information where there is a question whether the delay was unintentional.

The petition does not satisfy item (1) above.

The reference to add the above-noted, prior-filed applications on page one following the first sentence of the specification is not acceptable as drafted since it improperly incorporates by reference the prior-filed application(s). An incorporation by reference statement added after an application's filing date is not effective because no new matter can be added to an application after its filing date (*see* 35 U.S.C. § 132(a)). If an incorporation by reference statement is included in an amendment to

the specification to add a benefit claim under 35 U.S.C. § 120 after the filing date of the application, the amendment would not be proper. When a benefit claim under 35 U.S.C. § 120 is submitted after the filing of an application, the reference to the prior application cannot include an incorporation by reference statement of the prior application. *See* Dart Industries v. Banner, 636 F.2d 684, 207 USPQ 273 (C.A.D.C. 1980). *Note* MPEP §§ 201.06(c) and 608.04(b).

Before the petition under 37 CFR § 1.78(a)(3) can be granted, a renewed petition and either an Application Data Sheet or a substitute amendment (complying with the provisions of 37 CFR 1.121 and 37 CFR 1.76(b)(5)) to correct the above matters are required.

Further correspondence with respect to this matter should be addressed as follows:

By mail: Mail Stop PETITIONS
Commissioner for Patents
Post Office Box 1450
Alexandria, VA 22313-1450

By hand: Customer Service Window
Mail Stop Petitions
Randolph Building
401 Dulany Street
Alexandria, VA 22314

By fax: (571) 273-8300
ATTN: Office of Petitions

Any questions concerning this matter may be directed to Senior Petitions Attorney Derek Woods at (571) 272-3232.

Christina Tartera Donnell

Christina Tartera Donnell
Senior Petitions Attorney
Office of Petitions

UNITED STATES PATENT AND TRADEMARK OFFICE

Commissioner for Patents
United States Patent and Trademark Office
P.O. Box 1450
Alexandria, VA 22313-1450
www.uspto.gov

Pillsbury Winthrop LLP
Intellectual Property Group
Suite 200
11682 El Camino Real
San Diego, CA 92130-2092

COPY MAILED

JUL 12 2007

OFFICE OF PETITIONS

In re Application of
Reese et al.
Application No. 10/389,269
Filing or 371(c) Date: 03/13/2003
Attorney Docket No. P 044182/301823

DECISION ON PETITION
UNDER 37 CFR 1.78(a)(3)

This is a decision on the Renewed Petition under 37 CFR 1.78(a)(3), filed April 11, 2007, to accept an unintentionally delayed claim under 35 U.S.C. § 120 for the benefit of priority to the prior-filed nonprovisional application set forth in the amendment filed with the petition.

The petition is **GRANTED**.

A petition for acceptance of a claim for late priority under 37 CFR 1.78(a)(3) is only applicable to those applications filed on or after November 29, 2000. Further, the petition is appropriate only after the expiration of the period specified in 37 CFR 1.78(a)(2)(ii). In addition, the petition under 37 CFR 1.78(a)(3) must be accompanied by:

(1) the reference required by 35 U.S.C. § 120 and 37 CFR 1.78(a)(2)(i) of the prior-filed application, unless previously submitted;
(2) the surcharge set forth in § 1.17(t); and
(3) a statement that the entire delay between the date the claim was due under 37 CFR 1.78(a)(2)(ii) and the date the claim was filed was unintentional. The Director may require additional information where there is a question whether the delay was unintentional.

All of the above requirements having been satisfied, the late claim for priority under 35 U.S.C. § 120 is accepted as being unintentionally delayed.

The granting of the petition to accept the delayed benefit claim to the prior-filed application under 37 CFR 1.78(a)(3) should not be construed as meaning that this application is entitled to the benefit of the prior-filed application. In order for this application to be entitled to the benefit of the prior-filed application, all other requirements under 35 U.S.C. § 120 and 37

CFR 1.78(a)(1) and (a)(2) must be met. Similarly, the fact that the corrected Filing Receipt accompanying this decision on petition includes the prior-filed applications should not be construed as meaning that applicant is entitled to the claim for benefit of priority to the prior-filed application noted thereon. Accordingly, the examiner will, in due course, consider this benefit claim and determine whether the application is entitled to the benefit of the earlier filing date.

A corrected Filing Receipt, which includes the priority claim to the prior-filed nonprovisional application, accompanies this decision on petition.

Any inquiries concerning this decision may be directed to Derek Woods at (571) 272-3232. All other inquiries concerning either the examination procedures or status of the application should be directed to the Technology Center.

This application is being forwarded to Technology Center Art Unit 2877 for consideration by the examiner of applicant's entitlement to claim benefit of priority under 35 U.S.C. § 120 to the prior-filed applications.

Christina Tartera Donnell

Christina Tartera Donnell
Senior Petitions Attorney
Office of Petitions

ATTACHMENT: Corrected Filing Receipt

UNITED STATES PATENT AND TRADEMARK OFFICE

UNITED STATES DEPARTMENT OF COMMERCE
United States Patent and Trademark Office
Address: COMMISSIONER FOR PATENTS
P.O. Box 1450
Alexandria, Virginia 22313-1450
www.uspto.gov

APPL NO.	FILING OR 371(c) DATE	ART UNIT	FIL FEE REC'D	ATTY.DOCKET NO	TOT CLMS	IND CLMS
10/389,269	03/13/2003	2877	758	P 044182/301823	22	2

CONFIRMATION NO. 9764

CORRECTED FILING RECEIPT

OC000000024742407

27500
PILLSBURY WINTHROP SHAW PITTMAN LLP
ATTENTION: DOCKETING DEPARTMENT
P.O BOX 10500
McLean, VA 22102

Date Mailed: 07/10/2007

Receipt is acknowledged of this nonprovisional patent application. The application will be taken up for examination in due course. Applicant will be notified as to the results of the examination. Any correspondence concerning the application must include the following identification information: the U.S. APPLICATION NUMBER, FILING DATE, NAME OF APPLICANT, and TITLE OF INVENTION. Fees transmitted by check or draft are subject to collection. Please verify the accuracy of the data presented on this receipt. **If an error is noted on this Filing Receipt, please write to the Office of Initial Patent Examination's Filing Receipt Corrections. Please provide a copy of this Filing Receipt with the changes noted thereon. If you received a "Notice to File Missing Parts" for this application, please submit any corrections to this Filing Receipt with your reply to the Notice. When the USPTO processes the reply to the Notice, the USPTO will generate another Filing Receipt incorporating the requested corrections (if appropriate).**

Applicant(s)

Steven A. Reese, Shoreline, WA;
Carl S. Brown, Seattle, WA;
Paul C. Goodwin, Shoreline, WA;

Power of Attorney:

G Knight Jr--17698
George Sirilla--18221
Richard Zaitlen--27248
Jonathan Jobe Jr--28429
Glenn Perry--28458
Dale Lazar--28872
Suzanne Biggs--30158
Mark Paulson--30793
Roger Wise--31204
John Wetherell Jr--31678

Domestic Priority data as claimed by applicant

This appln claims benefit of 60/364,762 03/13/2002
and claims benefit of 60/431,692 12/06/2002
and is a CIP of 10/215,265 08/06/2002 ABN

Foreign Applications

If Required, Foreign Filing License Granted: 05/08/2003

The country code and number of your priority application, to be used for filing abroad under the Paris Convention, is US10/389,269

Projected Publication Date: Not Applicable

Non-Publication Request: No

Early Publication Request: No

**** SMALL ENTITY ****

Title

MULTI-AXIS INTEGRATION SYSTEM AND METHOD

Preliminary Class

356

PROTECTING YOUR INVENTION OUTSIDE THE UNITED STATES

Since the rights granted by a U.S. patent extend only throughout the territory of the United States and have no effect in a foreign country, an inventor who wishes patent protection in another country must apply for a patent in a specific country or in regional patent offices. Applicants may wish to consider the filing of an international application under the Patent Cooperation Treaty (PCT). An international (PCT) application generally has the same effect as a regular national patent application in each PCT-member country. The PCT process **simplifies** the filing of patent applications on the same invention in member countries, but **does not result** in a grant of "an international patent" and does not eliminate the need of applicants to file additional documents and fees in countries where patent protection is desired.

Almost every country has its own patent law, and a person desiring a patent in a particular country must make an application for patent in that country in accordance with its particular laws. Since the laws of many countries differ in various respects from the patent law of the United States, applicants are advised to seek guidance from specific foreign countries to ensure that patent rights are not lost prematurely.

Applicants also are advised that in the case of inventions made in the United States, the Director of the USPTO must issue a license before applicants can apply for a patent in a foreign country. The filing of a U.S. patent application serves as a request for a foreign filing license. The application's filing receipt contains further information and guidance as to the status of applicant's license for foreign filing.

Applicants may wish to consult the USPTO booklet, "General Information Concerning Patents" (specifically, the section entitled "Treaties and Foreign Patents") for more information on timeframes and deadlines for filing foreign patent applications. The guide is available either by contacting the USPTO Contact Center at 800-786-9199, or it can be viewed on the USPTO website at http://www.uspto.gov/web/offices/pac/doc/general/index.html.

For information on preventing theft of your intellectual property (patents, trademarks and copyrights), you may wish to consult the U.S. Government website, http://www.stopfakes.gov. Part of a Department of Commerce initiative, this website includes self-help "toolkits" giving innovators guidance on how to protect intellectual property in specific countries such as China, Korea and Mexico. For questions regarding patent enforcement issues, applicants may call the U.S. Government hotline at 1-866-999-HALT (1-866-999-4158).

LICENSE FOR FOREIGN FILING UNDER
Title 35, United States Code, Section 184
Title 37, Code of Federal Regulations, 5.11 & 5.15

GRANTED

The applicant has been granted a license under 35 U.S.C. 184, if the phrase "IF REQUIRED, FOREIGN FILING LICENSE GRANTED" followed by a date appears on this form. Such licenses are issued in all applications where the conditions for issuance of a license have been met, regardless of whether or not a license may be required as set forth in 37 CFR 5.15. The scope and limitations of this license are set forth in 37 CFR 5.15(a) unless an earlier license has been issued under 37 CFR 5.15(b). The license is subject to revocation upon written notification. The date indicated is the effective date of the license, unless an earlier license of similar scope has been granted under 37 CFR 5.13 or 5.14.

This license is to be retained by the licensee and may be used at any time on or after the effective date thereof unless it is revoked. This license is automatically transferred to any related applications(s) filed under 37 CFR 1.53(d). This license is not retroactive.

The grant of a license does not in any way lessen the responsibility of a licensee for the security of the subject matter as imposed by any Government contract or the provisions of existing laws relating to espionage and the national security or the export of technical data. Licensees should apprise themselves of current regulations especially with respect to certain countries, of other agencies, particularly the Office of Defense Trade Controls, Department of State (with respect to Arms, Munitions and Implements of War (22 CFR 121-128)); the Bureau of Industry and Security, Department of Commerce (15 CFR parts 730-774); the Office of Foreign Assets Control, Department of Treasury (31 CFR Parts 500+) and the Department of Energy.

NOT GRANTED

No license under 35 U.S.C. 184 has been granted at this time, if the phrase "IF REQUIRED, FOREIGN FILING LICENSE GRANTED" DOES NOT appear on this form. Applicant may still petition for a license under 37 CFR 5.12, if a license is desired before the expiration of 6 months from the filing date of the application. If 6 months has lapsed from the filing date of this application and the licensee has not received any indication of a secrecy order under 35 U.S.C. 181, the licensee may foreign file the application pursuant to 37 CFR 5.15(b).

UNITED STATES PATENT AND TRADEMARK OFFICE

Commissioner for Patents
United States Patent and Trademark Office
P.O. Box 1450
Alexandria, VA 22313-1450
www.uspto.gov

WARE FRESSOLA VAN DER SLUYS & ADOLPHSON, LLP
BRADFORD GREEN, BUILDING 5
755 MAIN STREET, PO BOX 224
MONROE CT 06468

COPY MAILED

SEP 0 5 2006

OFFICE OF PETITIONS

In re Application of	:	DECISION ON PETITION
Haumont et al.	:	
Application No. 10/389,287	:	
Filed: March 14, 2003	:	
Attorney Docket No. 944-004.021/NC	:	

This is decision on the petition under 37 CFR 1.181, filed January 9, 2006, to withdraw the holding of abandonment. The petition was recently forwarded to the Office of Petitions for a decision on the merits. The Office sincerely apologizes for any inconvenience.

On April 11, 2005, the Office mailed a nonfinal Office Action, which set a three month shortened statutory period for reply. In the apparent absence of a timely filed response, the Office mailed a Notice of Abandonment on December 16, 2005.

Petitioners asserted that they filed a timely response to the nonfinal Office Action in the form of an Amendment via USPS first class mail on June 24, 2005. A review of the record indicates that the USPTO did not receive the Amendment. In support of the assertion, petitioners submitted a copy of the Amendment, showing a certificate of mailing and dated June 24, 2005, and the statement of William J. Barber, the person who signed the certificate, attesting to a personal knowledge of the first class mailing with the USPS of the original response on the date indicated on the certificate of mailing.

After reviewing the documents submitted with the petition, the Office considers that the response to the nonfinal Office Action, in the form of an Amendment, was filed timely June 24, 2005. Accordingly, the petition to withdraw the holding of abandonment is **granted**.

This matter is being referred to Technology Center Art Unit 2685 to enter the reply submitted on June 25, 2005, and for consideration of the response by the examiner.

Telephone inquiries related to this decision should be directed to the undersigned at (571) 272-3211.

C. T. Donnell

Christina Tartera Donnell
Senior Petitions Attorney
Office of Petitions

UNITED STATES PATENT AND TRADEMARK OFFICE

Commissioner for Patents
United States Patent and Trademark Office
P.O. Box 1450
Alexandria, VA 22313-1450
www.uspto.gov
AMB

Paper No. 4

COPY MAILED

JUL 1 6 2003

OFFICE OF PETITIONS

MYERS BIGEL SIBLEY & SAJOVEC
PO BOX 37428
RALEIGH, NC 27627

In re Application of
Wood
Application No. 10/389,298
Filed: March 14, 2003
Attorney Docket No.: 9151-21

ON PETITION

This is in response to the petition, filed June 11, 2003 under 37 CFR 1.10(c), requesting that the above-identified application be accorded a filing date of March 14, 2003 instead of the presently accorded filing date of March 17, 2003.

Petitioner alleges that the application was deposited in Express Mail service March 14, 2003. As supporting evidence, petitioner has provided a copy of an Express Mail label bearing tracking number EV193586331US (the same Express Mail number found on the application transmittal letter accompanying the original application papers located in the official file) and a "date-in" of March 14, 2003. In addition, a search of the USPS Express Mail Information Database indicates that a package bearing Express Mail label No. EV193586331US was accepted by the USPS on March 14, 2003 and delivered to the United States Patent and Trademark Office on March 17, 2003.

In view of the above, the petition under 37 CFR 1.10(c) to accord the above-identified application a filing date of March 14, 2003 is hereby **GRANTED**.

No fee is due in connection with this petition.

This application is being forwarded to the Office of Initial Patent Examination for further processing with a filing date of March 14, 2003.

Telephone inquiries related to this decision may be directed to the undersigned at (703) 305-0310.

Alesia M. Brown
Petitions Attorney
Office of Petitions

SPE RESPONSE FOR CERTIFICATE OF CORRECTION

Paper No.: _____

DATE : March 31, 2006

TO SPE OF : ART UNIT 3739

SUBJECT : Request for Certificate of Correction for Appl. No.: 10/389306 Patent No.: 6,997,867

Please respond to this request for a certificate of correction within 7 days.

Please review the requested changes/corrections as shown in the **COCIN** document(s) in the IFW application image. No new matter should be introduced, nor should the scope or meaning of the claims be changed.

Please complete the response (see below) and forward the completed response to scanning using document code **COCX**.

Magdalene Talley

Certificates of Correction Branch

703-308-9390 ext. 116

Thank You For Your Assistance

The request for issuing the above-identified correction(s) is hereby:

Note your decision on the appropriate box.

- ☑ **Approved** — **All** changes apply.
- ☐ **Approved in Part** — Specify below which changes **do not** apply.
- ☐ **Denied** — State the reasons for denial below.

Comments: Corrections do not effect the scope of the claims.

SPE

3739
Art Unit

UNITED STATES PATENT AND TRADEMARK OFFICE

Commissioner for Patents
United States Patent and Trademark Office
P.O. Box 1450
Alexandria, VA 22313-1450
www.uspto.gov

KYLE EPEELE
ROCKWELL COLLINS, INC.
INTELLECTUAL PROPERTY DEPARTMENT
400 COLLINS ROAD NE
M/S 124-323
CEDAR RAPIDS IA 52498

COPY MAILED

JUL 2 8 2004

OFFICE OF PETITIONS

In re Application of	:	
Leslie F. Warren et al	:	
Application No. 10/389,347	:	DECISION GRANTING PETITION
Filed: March 14, 2003	:	UNDER 37 CFR 1.137(b)
Attorney Docket No. 047141-0290(02SC009)	:	

This is a decision on the petition, filed May 11, 2004, which is being treated as a petition under 37 CFR 1.137(b) to revive the instant nonprovisional application for failure to timely notify the U.S. Patent and Trademark (USPTO) of the filing of an application in a foreign country, or under a multinational treaty that requires publication of applications eighteen months after filing. *See* 37 CFR 1.137(f).

The petition is **GRANTED**.

Petitioner states that the instant nonprovisional application is the subject of an application filed in an eighteen month publication country on March 5, 2004. However, the USPTO was unintentionally not notified of this filing within 45 days subsequent to the filing of the subject application in an eighteen month publication country.

In view of the above, this application became abandoned pursuant to 35 U.S.C. § 122(b)(2)(B)(iii) and 37 CFR 1.213(c) for failure to timely notify the Office of the filing of an application in a foreign country or under a multilateral international agreement that requires publication of applications 18 months after filing.

A petition to revive an application abandoned pursuant to 35 U.S.C. 122(b)(2)(B)(iii) for failure to notify the USPTO of a foreign filing must be accompanied by:

(1) the required reply which is met by the notification of such filing in a foreign country or under a multinational treaty;
(2) the petition fee as set forth in 37 CFR 1.17(m); and
(3) a statement that the entire delay in filing the required reply from the due date of the reply until the filing of a grantable petition was unintentional.

The instant petition has been found to be in compliance with 37 CFR 1.137(b). Accordingly, the failure to timely notify the USPTO of a foreign or international filing within 45 days after the date of filing of such foreign or international application as provided by 35 U.S.C. § 122(b)(2)(B)(iii) and 37 CFR 1.213(c) is accepted as having been unintentionally delayed.

The previous Request and Certification under 35 U.S.C. § 122(b)(2)(B)(i) has been rescinded. A Notice Regarding Rescission of Nonpublication Request which sets forth the projected publication date of September 16, 2004, was mailed on May 24, 2004.

Any inquiries concerning this decision may be directed to the undersigned at (703) 8859.

This application is being forwarded to Technology Center Art Unit 1775 for examination in due course.

Karen Creasy

Karen Creasy
Petitions Examiner
Office of Petitions
Office of the Deputy Commissioner
for Patent Examination Policy

UNITED STATES PATENT AND TRADEMARK OFFICE

Commissioner for Patents
United States Patent and Trademark Office
P.O. Box 1450
Alexandria, VA 22313-1450
www.uspto.gov

BARNES & THORNBURG LLP
P.O. BOX 2786
CHICAGO IL 60690-2786

COPY MAILED

FEB 04 2008

OFFICE OF PETITIONS

In re Application of	:	
HOUSE, Sandra M. et al.	:	
Application No. 10/389,376	:	DECISION ON PETITION
Filed: March 14, 2003	:	TO WITHDRAW
Attorney Docket No. **28608/94172**	:	FROM RECORD
	:	

This is a decision on the Request to Withdraw as attorney or agent of record under 37 C.F.R. § 1.36(b), filed December 12, 2007.

The request is **APPROVED**.

A grantable request to withdraw as attorney/agent of record must be signed by every attorney/agent seeking to withdraw or contain a clear indication that one attorney is signing on behalf of another/others. A request to withdraw will not be approved unless at least 30 (thirty) days would remain between the date of approval and the later of the expiration date of a time to file a response or the expiration date of the maximum time period which can be extended under 37 C.F.R. § 1.136(a).

The request was signed by Grant Peters on behalf of all attorneys of record who are associated.
All attorneys/agents associated have been withdrawn. Applicant is reminded that there is no attorney of record at this time.

The request to change the correspondence of record is not acceptable as the requested correspondence address is not that of: (1) the first named signing inventor; or (2) an intervening assignee of the entire interest under 37 C.F.R 3.71. All future communications from the Office will be directed to the first named signing inventor at the first copied address below until otherwise properly notified by the applicant.

Telephone inquiries concerning this decision should be directed to Tredelle Jackson at 571-272-2783.

Monica A. Graves
Petitions Examiner
Office of Petitions

cc: **SANDRA M. HOUSE**
456D E. NORTH WATER, ST.
CHICAGO, IL 60611

cc: **DAVID LEIBOWITZ, TRUSTEE**
LAW CENTER
420 W. CLAYTON STREET
WAUKEGAN, IL 60085-5618

UNITED STATES PATENT AND TRADEMARK OFFICE

Commissioner for Patents
United States Patent and Trademark Office
P.O. Box 1450
Alexandria, VA 22313-1450
www.uspto.gov

JJGJr: 07-06

Paper No: ___

COPY MAILED

JUL 1 0 2006

OFFICE OF PETITIONS

FINNEGAN, HENDERSON,
FARABOW, GARRETT
& DUNNER LLP
901 NEW YORK AVENUE, NW
WASHINGTON DC 20001-4413

In re Application of:	:	
Buxton, et al.	:	
In the Re-Issue Application	:	
of Patent No.: 5,910,592	:	
Application No. 10/389,381	:	
Filed: 17 March, 2003	:	ON PETITION
Attorney Docket No.: 04012.0359-00	:	

This is a decision on the petition, filed on 10 April, 2006, which is being treated as a request under 37 C.F.R. §3.81(b)[1] to correct the assignee's nation-state on the Fee(s) Transmittal form PTOL-85(b) so that the Letters Patent will issue to the assignee, properly identified.

The request is **DISMISSED**.

Petitioner states that the correct assignee's nation-state is United Kingdom, and that an incorrect assignee's nation-state (to wit: England) was included on the Part B - Fee(s) Transmittal form at the time of payment of the issue fee.

Accordingly, Petitioner requests that the patent issue to assignee "SmithKline Beecham PLC, Brentford Middlesex England."

37 C.F.R. §3.81(b), effective June 25, 2004, reads:

---

[1] *See* MPEP §1309, subsection II and Official Gazette of 22 June, 2004.

> *After payment of the issue fee:* Any request for issuance of an application in the name of the assignee submitted after the date of payment of the issue fee, and any request for a patent to be corrected to state the name of the assignee, must state that the assignment was submitted for recordation as set forth in §3.11 before issuance of the patent, and must include a request for a certificate of correction under §1.323 of this chapter (accompanied by the fee set forth in § 1.20(a)) and the processing fee set forth in § 1.17(i) of this chapter.

The request under 37 C.F.R. §3.81(b) was not accompanied by a request for a certificate of correction (and fee) as required by §3.81(b). *See also* MPEP §1481.01.

As Petitioner has failed to comply with the provisions of 37 C.F.R. §3.81(b), the request cannot be granted at this time.

A review of Office database assignment records reflects that, as of this writing, no assignment has been recorded in the instant application and in the parent Application No. 08/892,045, which issued as Patent No. 5,910,592, of which this is as indicated above the re-issue application, an assignment to "SmithKline Beecham PLC, Brentford Middlesex England," has been recorded. Therefore, upon filing of the appropriate assignment and submission of the required certificate of correction and fee, it would be appropriate for the Office to issue a certificate of correction to correct the front page of the Letters Patent to reflect that "SmithKline Beecham PLC, Brentford Middlesex England," was the assignee of record at the time of issuance of the application into a patent. *Note also* 35 U.S.C. §152.

In view of the above and **after issuance of this application into a patent, the Certificates of Correction Branch is instructed to issue a certificate of correction <u>upon submission by Petitioner of a request for a certificate of correction (and fee) which sets forth</u>** "SmithKline Beecham PLC, Brentford Middlesex England,"--unless otherwise corrected in the assignment before issue--**<u>as the assignee</u>**. *No certificate of correction will be issued which sets forth an assignee other than the assignee desination set forth in this request. A copy of this decision* ***<u>must</u>*** *accompany the request for a Certificate of Correction.*

No further renewed request under 37 C.F.R. §3.81(b) is necessary for consideration by the Office of Petitions for issuance of a certificate of correction in the name of the assignee set forth in this request, since this decision operates as an instruction to the Certificates of Correction Branch to issue the requested certificate of correction.

Alternatively, if Petitioner desires to have the correct assignee data appear on the front page of the Letters Patent, Petitioner may wish to consider filing a petition to withdraw the subject

application from issue under 37 C.F.R. §1.313(c)(2). The petition to withdraw from issue under 37 C.F.R. §1.313(c)(2) must be accompanied by a request for continued examination (RCE) and submission (which may be a request under 37 C.F.R. §3.81(b)).

Telephone inquiries regarding this decision should be directed to the undersigned at (571) 272-3214.

John J. Gillon, Jr.
Senior Attorney
Office of Petitions

UNITED STATES PATENT AND TRADEMARK OFFICE

Commissioner for Patents
United States Patent and Trademark Office
P.O. Box 1450
Alexandria, VA 22313-1450 ARENT FOX LLP
1050 CONNECTICUT AVENUE, N.W.
SUITE 400
WASHINGTON DC 20036
www.uspto.gov

DARBY & DARBY P.C.
P.O. BOX 770
Church Street Station
New York NY 10008-0770

COPY MAILED

MAR 0 4 2008

OFFICE OF PETITIONS

In re Patent No. 7,306,420	:	
Issue Date: December 11, 2007	:	
Application No. 10/389,383	:	ON PETITION
Filed: March 14, 2003	:	
Attorney Docket No. 2136/OM663US0	:	

This is a decision on the petition filed January 11, 2008, which is being treated as a request under 37 CFR 3.81(b)[1] to correct the name of an assignee on the front page of the above-identified patent by way of a Certificate of Correction.

The request is **GRANTED**.

Telephone inquiries concerning this decision may be directed to Carl Friedman at (571) 272-6842. Inquiries regarding the issuance of a certificate of correction should be directed to the Certificate of Correction Branch at (571) 272-4200.

The Certificates of Correction Branch will be notified of this decision granting the petition under 37 CFR 3.81(b) and directing issuance of the requested Certificate of Correction.

Carl Friedman
Petitions Examiner
Office of Petitions

[1] *See* MPEP 1309, subsection II; and Official Gazette of June 22, 2004.

SPE RESPONSE FOR CERTIFICATE OF CORRECTION

Paper No.: _____

DATE : Feb. 10, 2006

TO SPE OF : ART UNIT 3751 (Justine Yu)

SUBJECT : Request for Certificate of Correction on ~~Patent~~ SN No.: ~~6,854,908~~ 10/389,387

A response is requested with respect to the accompanying request for a certificate of correction.

Please complete this form and return with file, within 7 days to:
Palm location **7580, Certificates of Correction Branch – South Tower – 9A22**
If response is for an IFW, **return to employee (named below) via PUBSCofC Team in MADRAS.**
With respect to the change(s) requested, correcting Office and/or Applicant's errors, should the patent read as shown in the certificate of correction (COCIN)? No new matter should be introduced, nor should the scope or meaning of the claims be changed.
Please see the drawing change. Your denial or approval decision is needed below.

sp STACY POWELL

Thank You For Your Assistance

Certificates of Correction Branch
Tel. No. 703-308-9390 x120

The request for issuing the above-identified correction(s) is hereby:
Note your decision on the appropriate box.

- ☒ **Approved** — **All** changes apply.
- ☐ **Approved in Part** — Specify below which changes **do not** apply.
- ☐ **Denied** — State the reasons for denial below.

Comments:

Drawing correction is OK

Justine Z — **SPE**

3751 — **Art Unit**

UNITED STATES PATENT AND TRADEMARK OFFICE

Commissioner for Patents
United States Patent and Trademark Office
P.O. Box 1450
Alexandria, VA 22313-1450
www.uspto.gov
DIW May-05

COHEN SAKAGUCHI & ENGLISH LLP
2040 MAIN STREET, 9TH FLOOR
IRVINE CA 92614

COPY MAILED

MAY 3 1 2005

OFFICE OF PETITIONS

In re Application of	:	
Lebovic et al.	:	
Application No. 10/389,392	:	DECISION ON PETITION
Filed: 14 March, 2003	:	
Attorney Docket No. 265/029CON1	:	
(7030902001)	:	

This is a decision on the renewed petition filed on 23 February, 2005, under 37 CFR 1.137(b)[1], to revive the above-identified application.

The petition is **GRANTED**.

The application became abandoned on 26 December, 2004, for failure to timely submit the issue fee as required by the Notice of Allowance and Issue Fee Due mailed on 24 September, 2004,

---

[1]Effective December 1, 1997, the provisions of 37 CFR 1.137(b) now provide that where the delay in reply was unintentional, a petition may be filed to revive an abandoned application or a lapsed patent pursuant to 37 CFR 1.137(b). A grantable petition filed under the provisions of 37 CFR 1.137(b) must be accompanied by:

(1) the required reply, unless previously filed. In a nonprovisional application abandoned for failure to prosecute, the required reply may be met by the filing of a continuing application. In an application or patent, abandoned or lapsed for failure to pay the issue fee or any portion thereof, the required reply must be the payment of the issue fee or any outstanding balance thereof.

(2) the petition fee as set forth in 37 CFR 1.17(m);

(3) a statement that the entire delay in filing the required reply from the due date for the reply until the filing of a grantable petition pursuant to 37 CFR 1.137(b) was unintentional. The Commissioner may required additional information where there is a question whether the delay was unintentional; and

(4) any terminal disclaimer (and fee as set forth in 37 CFR 1.20(d)) required pursuant to 37 CFR 1.137(c)).

which set a three (3) month statutory period for reply. The filing of the present petition precedes the mailing of Notice of Abandonment.

The issue and publication and petition fees have been charged to counsel's deposit account, No. 50-1105, as authorized in the petition.

This application is being referred to the Publishing Division for processing into a patent.

Telephone inquiries concerning this matter may be directed to the undersigned at (571) 272-3231.

DWood

Douglas I. Wood
Senior Petitions Attorney
Office of Petitions

UNITED STATES PATENT AND TRADEMARK OFFICE

Commissioner for Patents
United States Patent and Trademark Office
P.O. Box 1450
Alexandria, VA 22313-1450
www.uspto.gov

HARNESS, DICKEY & PIERCE, P.L.C.
7700 BONHOMME AVENUE, SUITE 400
ST. LOUIS, MO 63105

COPY MAILED

DEC 20 2004

OFFICE OF PETITIONS

In re Application of :
Steven Gullerud, et al. :
Application No. 10/389,399 : ON PETITION
Filed: March 14, 2003 :
Attorney Docket No. D1349-00099 (7377-000083) :

This is a decision on the petition under 37 CFR 1.137(b), filed September 17, 2004, to revive the above-identified application.

The petition is **GRANTED.**

The above-identified application became abandoned for failure to reply in a timely manner to the non-final Office action mailed December 19, 2003, which set a shortened statutory period for reply of three (3) months. No extensions of time under the provisions of 37 CFR 1.136(a) were obtained. Accordingly, the application became abandoned at midnight on March 19, 2004.

37 CFR 1.137(d) requires a terminal disclaimer dedicating to the public a terminal part of the term of any patent granted on the above-identified application or any patent granted on any continuing application that contains a specific reference under 35 U.S.C. 120, 121, or 365(c) to the above-identified application. Since the application is not a utility or plant application filed before June 8, 1995, a terminal disclaimer is not required. Accordingly, the terminal disclaimer filed with the instant petition is unnecessary. Therefore, the fee of $110 will be refunded to petitioner in due course.

The Revocation of Power of Attorney and Change of Correspondence Address has been accepted and recorded.

Telephone inquiries concerning this decision should be directed to the undersigned at (571) 272-3229.

The application matter is being referred to Technology Center 3600, Art Unit 3644 for further processing.

Retta Williams

Retta Williams
Petitions Examiner
Office of Petitions
Office of the Deputy Commissioner
for Patent Examination Policy

UNITED STATES PATENT AND TRADEMARK OFFICE

COMMISSIONER FOR PATENTS
UNITED STATES PATENT AND TRADEMARK OFFICE
WASHINGTON, D.C. 20231
www.uspto.gov

APPLICATION NUMBER	FILING/RECEIPT DATE	FIRST NAMED APPLICANT	ATTORNEY DOCKET NUMBER
10/389,417	03/13/2003	Cary L. Queen	011823-002652US

CONFIRMATION NO.
2107

TOWNSEND AND TOWNSEND AND CREW, LLP
TWO EMBARCADERO CENTER
EIGHTH FLOOR
SAN FRANCISCO CA 94111-3834

Decision Dismissing Petition under 37 CFR 1.138(c)

The declaration of express abandonment will not be recognized

This is in response to the petition under 37 CFR 1.138(c) for express abandonment to avoid publication of the above-identified application, for which a faxed copy of the original petition was received on February 25, 2004.

The petition is dismissed.

The express abandonment will **not** be recognized because the petition under 37 CFR 1.138© was not received in sufficient time to permit the appropriate officials to recognize the abandonment and remove the application from the publication process.

The application will publish as scheduled.

Telephone inquiries should be directed to the Office of Patent Publication, the Pre-Grant Publication Division, at 703-605-4283.

Barbara J. Debnam
Office of Patent Publication
Pre-Grant Publication Division

Rev. 10/01

UNITED STATES PATENT AND TRADEMARK OFFICE

COMMISSIONER FOR PATENTS
UNITED STATES PATENT AND TRADEMARK OFFICE
P.O. BOX 1450
ALEXANDRIA, VA 22313-1450
www.uspto.gov

WHYTE HIRSCHBOECK DUDEK S.C.
555 EAST WELLS STREET
SUITE 1900
MILWAUKEE, WI 53202

COPY MAILED

JUL 24 2006

OFFICE OF PETITIONS

In re Application of	:	
Hock Chuan Tan, et al.	:	
Application No. 10/389,433	:	ON PETITION
Filed: March 14, 2003	:	
Attorney Docket No.: MTI-31608-A	:	

This is a decision on the petition, filed July 20, 2006, under 37 CFR 1.313(c)(2) to withdraw the above-identified application from issue after payment of the issue fee.

The petition is **GRANTED**.

The above-identified application is withdrawn from issue for consideration of a submission under 37 CFR 1.114 (request for continued examination). See 37 CFR 1.313(c)(2).

Petitioner is advised that the issue fee paid on July 10, 2006, in the above-identified application cannot be refunded. If, however, the above-identified application is again allowed, petitioner may request that it be applied towards the issue fee required by the new Notice of Allowance. [1]

Telephone inquiries relating to this decision should be directed to the undersigned at (571) 272-3204.

The application is being referred to Technology Center AU 2814 for further processing of the request for continued examination under 37 CFR 1.114.

Sherry D. Brinkley
Petitions Examiner
Office of Petitions

[1]The request to apply the issue fee to the new Notice may be satisfied by completing and returning the new Issue Fee Transmittal Form PTOL-85(b), which includes the following language thereon: "Commissioner for Patents is requested to apply the Issue Fee and Publication Fee (if any) or re-apply any previously paid issue fee to the application identified above." Petitioner is advised that, whether a fee is indicated as being due or not, the Issue Fee Transmittal Form **must** be completed and timely submitted to avoid abandonment. Note the language in bold text on the first page of the Notice of Allowance and Fee(s) Due (PTOL-85).

UNITED STATES PATENT AND TRADEMARK OFFICE

Commissioner for Patents
United States Patent and Trademark Office
P.O. Box 1450
Alexandria, VA 22313-1450
www.uspto.gov

In re Patent No. 6960199
Issue Date: November 1,2005
Application No. 10389437
Filed: March 14,2003
Attorney Docket No. 214.002

:
:DECISION GRANTING PETITION
:UNDER 37 CFR 1.378(c)
:

This is a decision on the electronic petition, filed December 22,2009 ,under 37 CFR 1.378(c) to accept the unintentionally delayed payment of the 3.5 year maintenance fee for the above-identified patent.

The petition is **GRANTED**.

The maintenance fee is accepted, and the above-identified patent reinstated as of December 22,2009 . This decision also constitutes notice that the fee has been accepted. An electronic copy of the petition and this decision has been created as an entry in the Image File Wrapper. Nevertheless, petitioner should print and retain an independent copy.

Telephone inquiries related to this electronic decision should be directed to the Electronic Business Center at 1-866-217-9197.

PTO/SB/66 (03-09)
Approved for use through 03/31/2012. OMB 0651-0016
U.S. Patent and Trademark Office: U.S. DEPARTMENT OF COMMERCE
Under the Paperwork Reduction Act of 1995, no persons are required to respond to a collection of information unless it displays valid OMB control number.

PETITION TO ACCEPT UNINTENTIONALLY DELAYED PAYMENT OF MAINTENANCE FEE IN AN EXPIRED PATENT (37 CFR 1.378(c))

Patent Number	Issue Date (YYYY-MM-DD)	Application Number	Filing Date (YYYY-MM-DD)	Docket Number (if applicable)
6960199	2005-11-01	10389437	2003-03-14	214.002

CAUTION: Maintenance fee (and surcharge, if any) payment must correctly identify: (1) the patent number and (2) the application number of the actual U.S. application leading to issuance of that patent to ensure the fee(s) is/are associated with the correct patent. 37 CFR 1.366(c) and (d).

SMALL ENTITY
☒ Patentee claims, or has previously claimed, small entity status. See 37 CFR 1.27.

LOSS OF ENTITLEMENT TO SMALL ENTITY STATUS
☐ Patentee is no longer entitled to small entity status. See 37 CFR 1.27(g)

NOT Small Entity			Small Entity		
	Fee	Code		Fee	Code
○	3 ½ year	(1551)	◉	3 ½ year	(2551)
○	7 ½ year	(1552)	○	7 ½ year	(2552)
○	11 ½ year	(1553)	○	11 ½ year	(2553)

SURCHARGE
The surcharge required by 37 CFR 1.20(i)(2) (Fee Code 1558) must be paid as a condition of accepting unintentionally delayed payment of the maintenance fee.

MAINTENANCE FEE (37 CFR 1.20(e)-(g))
The appropriate maintenance fee must be submitted with this petition.

STATEMENT
THE UNDERSIGNED CERTIFIES THAT THE DELAY IN PAYMENT OF THE MAINTENANCE FEE TO THIS PATENT WAS UNINTENTIONAL

PETITIONER(S) REQUEST THAT THE DELAYED PAYMENT OF THE MAINTENANCE FEE BE ACCEPTED AND THE PATENT REINSTATED

THIS PORTION MUST BE COMPLETED BY THE SIGNATORY OR SIGNATORIES

37 CFR 1.378(d) states: "Any petition under this section must be signed by an attorney or agent registered to practice before the Patent and Trademark Office, or by the patentee, the assignee, or other party in interest."

I certify, in accordance with 37 CFR 1.4(d)(4) that I am

○ An attorney or agent registered to practice before the Patent and Trademark Office

○ A sole patentee

◉ A joint patentee; I certify that I am authorized to sign this submission on behalf of all the other patentees.

○ A joint patentee; all of whom are signing this e-petition

○ The assignee of record of the entire interest

A Joint Patentee and I certify that I am authorized to sign this submission on behalf of all the other patentees			
A signature of the applicant or representative is required in accordance with 37 CFR 1.33 and 10.18. Please see 37 CFR 1.4(d) for the form of the signature.			
Signature	/Jeffrey S. Burkett/	Date (YYYY-MM-DD)	2009-12-22
Name	Jeffrey S. Burkett		

This collection of information is required by 37 CFR 1.378(c). The information is required to obtain or retain a benefit by the public which is to file (and by the USPTO to process) an application. Confidentiality is governed by 35 U.S.C. 122 and 37 CFR 1.11 and 1.14. This collection is estimated to take 1 hour to complete, including gathering, preparing, and submitting the completed application form to the USPTO. Time will vary depending upon the individual case. Any comments on the amount of time you require to complete this form and/ or suggestions for reducing this burden, should be sent to the Chief Information Officer, U.S. Patent and Trademark Office, U.S. Department of Commerce, P.O. Box 1450, Alexandria, VA 22313-1450. DO NOT SEND FEES OR COMPLETED FORMS TO THIS ADDRESS. **This form can only be used when in conjunction with EFS-Web. If this form is mailed to the USPTO, it may cause delays in reinstating the patent.**

Privacy Act Statement

The Privacy Act of 1974 (P.L. 93-579) requires that you be given certain information in connection with your submission of the attached form related to a patent application or patent. Accordingly, pursuant to the requirements of the Act, please be advised that: (1) the general authority for the collection of this information is 35 U.S.C. 2(b)(2); (2) furnishing of the information solicited is voluntary; and (3) the principal purpose for which the information is used by the U.S. Patent and Trademark Office is to process and/or examine your submission related to a patent application or patent. If you do not furnish the requested information, the U.S. Patent and Trademark Office may not be able to process and/or examine your submission, which may result in termination of proceedings or abandonment of the application or expiration of the patent.

The information provided by you in this form will be subject to the following routine uses:

1. The information on this form will be treated confidentially to the extent allowed under the Freedom of Information Act (5 U.S.C. 552) and the Privacy Act (5 U.S.C. 552a). Records from this system of records may be disclosed to the Department of Justice to determine whether the Freedom of Information Act requires disclosure of these records.

2. A record from this system of records may be disclosed, as a routine use, in the course of presenting evidence to a court, magistrate, or administrative tribunal, including disclosures to opposing counsel in the course of settlement negotiations.

3. A record in this system of records may be disclosed, as a routine use, to a Member of Congress submitting a request involving an individual, to whom the record pertains, when the individual has requested assistance from the Member with respect to the subject matter of the record.

4. A record in this system of records may be disclosed, as a routine use, to a contractor of the Agency having need for the information in order to perform a contract. Recipients of information shall be required to comply with the requirements of the Privacy Act of 1974, as amended, pursuant to 5 U.S.C. 552a(m).

5. A record related to an International Application filed under the Patent Cooperation Treaty in this system of records may be disclosed, as a routine use, to the International Bureau of the World Intellectual Property Organization, pursuant to the Patent Cooperation Treaty.

6. A record in this system of records may be disclosed, as a routine use, to another federal agency for purposes of National Security review (35 U.S.C. 181) and for review pursuant to the Atomic Energy Act (42 U.S.C. 218(c)).

7. A record from this system of records may be disclosed, as a routine use, to the Administrator, General Services, or his/her designee, during an inspection of records conducted by GSA as part of that agency's responsibility to recommend improvements in records management practices and programs, under authority of 44 U.S.C. 2904 and 2906. Such disclosure shall be made in accordance with the GSA regulations governing inspection of records for this purpose, and any other relevant (i.e., GSA or Commerce) directive. Such disclosure shall not be used to make determinations about individuals.

8. A record from this system of records may be disclosed, as a routine use, to the public after either publication of the application pursuant to 35 U.S.C. 122(b) or issuance of a patent pursuant to 35 U.S.C. 151. Further, a record may be disclosed, subject to the limitations of 37 CFR 1.14, as a routine use, to the public if the record was filed in an application which became abandoned or in which the proceedings were terminated and which application is referenced by either a published application, an application open to public inspections or an issued patent.

9. A record from this system of records may be disclosed, as a routine use, to a Federal, State, or local law enforcement agency, if the USPTO becomes aware of a violation or potential violation of law or regulation.

UNITED STATES PATENT AND TRADEMARK OFFICE

COMMISSIONER FOR PATENTS
UNITED STATES PATENT AND TRADEMARK OFFICE
P.O. BOX 1450
ALEXANDRIA, VA 22313-1450
www.uspto.gov

VINCENT A. CICHOSZ, ESQ.
DELPHI TECHNOLOGIES, INC.
MAIL CODE 480410202
P.O. BOX 5052
TROY, MI 48007

COPY MAILED

DEC 0 8 2004

OFFICE OF PETITIONS

In re Application of :
Diane M. England :
Application No. 10/389,452 : DECISION ON PETITION
Filed: March 14, 2003 : UNDER 37 CFR 1.78(a)(3)
Attorney Docket No. 89190.125602 (DP-308223)

This is a decision on the petition under 37 CFR 1.78(a)(3), filed August 5, 2004, to accept an unintentionally delayed claim under 35 U.S.C. § 120 for the benefit of priority to the prior-filed nonprovisional applications set forth in the concurrently filed amendment.

The petition is **GRANTED**.

A petition for acceptance of a claim for late priority under 37 CFR 1.78(a)(3) is only applicable to those applications filed on or after November 29, 2000. Further, the petition is appropriate only after the expiration of the period specified in 37 CFR 1.78(a)(2)(ii). In addition, the petition under 37 CFR 1.78(a)(3) must be accompanied by:

> **(1)** the reference required by 35 U.S.C. § 120 and 37 CFR 1.78(a)(2)(i) of the prior-filed application, unless previously submitted;
> **(2)** the surcharge set forth in § 1.17(t); and
> **(3)** a statement that the entire delay between the date the claim was due under 37 CFR 1.78(a)(2)(ii) and the date the claim was filed was unintentional. The Commissioner may require additional information where there is a question whether the delay was unintentional.

The instant pending application was filed on March 14, 2003, and was pending at the time of filing of the instant petition. A reference to the prior-filed nonprovisional application has been included in an amendment to the first sentence of the specification following the title as required by 37 CFR 1.78(a)(2)(iii).

The instant nonprovisional application was filed after November 29, 2000, and the claim herein for the benefit of priority to the prior-filed nonprovisional application is submitted after

expiration of the period specified in 37 CFR 1.78(a)(2)(ii). Also, the reference to the prior-filed nonprovisional application was submitted during the pendency of the instant nonprovisional application, for which the claim for benefit of priority is sought. *See* 35 U.S.C. § 120. Accordingly, having found that the instant petition for acceptance of an unintentionally delayed claim for the benefit of priority under 35 U.S.C. § 120 to the prior-filed nonprovisional application satisfies the conditions of 37 CFR 1.78(a)(3), the petition is granted.

The granting of the petition to accept the delayed benefit claim to the prior-filed application under 37 CFR 1.78(a)(3) should not be construed as meaning that the instant application is entitled to the benefit of the prior-filed application. In order for the instant application to be entitled to the benefit of the prior-filed application, all other requirements under 35 U.S.C. § 120 and 37 CFR 1.78(a)(1) and (a)(2) must be met. Similarly, the fact that the corrected Filing Receipt accompanying this decision on petition includes the prior-filed application should not be construed as meaning that applicant is entitled to the claim for benefit of priority to the prior-filed application noted thereon. Accordingly, the examiner will, in due course, consider this benefit claim and determine whether the instant application is entitled to the benefit of the earlier filing date.

The file does not indicate a change of address has been submitted, although the address given on the petition differs from the address of record. If appropriate, a change of address should be filed in accordance with MPEP 601.03. A courtesy copy of this decision is being mailed to the address given on the petition; however, the Office will mail all future correspondence solely to the address of record.

Any inquiries concerning this decision may be directed to Irvin Dingle at (571) 272-3210.

This matter is being forwarded to Technology Center Art Unit 1745.

Frances Hicks

Frances Hicks
Petitions Examiner
Office of Petitions
Office of the Deputy Commissioner
for Patent Examination Policy

cc:

Jaeckle Fleischmann & Mugel, LLP
190 Linden Oaks
Rochester, NY 14625-2812

Attachment: Corrected Filing Receipt

UNITED STATES PATENT AND TRADEMARK OFFICE

Commissioner for Patents
United States Patent and Trademark Office
P.O. Box 1450
Alexandria, VA 22313-1450
www.uspto.gov

FOLEY & LARDNER LLP
777 EAST WISCONSIN AVENUE
MILWAUKEE WI 53202-5306

COPY MAILED

AUG 14 2008

OFFICE OF PETITIONS

In re Application of	:	
Wang et al.	:	
Application No. 10/389,456	:	LETTER REGARDING PTA
Filed: 3/14/2003	:	
Attorney Docket No.	:	
039153-0638 (H0962)	:	

This letter is in response to the "COMMUNICATION REGARDING PATENT TERM ADJUSTMENT", filed on November 20, 2007. Applicants request that the initial determination of patent term adjustment under 35 U.S.C. §154(b) be reviewed for accuracy.

The request for correction of the patent term adjustment (PTA) is **DISMISSED**.

On August 24, 2007, the Office mailed the Determination of Patent Term Adjustment under 35 U.S.C. §154(b) in the above-identified application. The Notice stated that the patent term adjustment to date is four hundred sixty-four (464) days.

Applicants filed the instant "COMMUNICATION REGARDING PATENT TERM ADJUSTMENT" on November 20, 2007.

A review of the record reveals that the determination of patent term adjustment was correct. The Office determined a patent term adjustment of four hundred sixty-four (464) days based on an adjustment for PTO delay of five hundred one (501) days pursuant to 35 U.S.C. 154(b)(1)(A)(i) and 37 C.F.R. §1.703(a)(1), reduced by eight (8) days, nine (9) days, and twenty (20) days of applicant delay pursuant to 37 C.F.R. §1.704(b).

In view thereof, the correct determination of PTA at the time of the mailing of the Notice of Allowance is **four hundred sixty-four (464) days** (501 days of PTO delay, reduced by 37 (8+9+20) days of Applicant delay). To the extent that applicants are aware of any specific error in the PTA calculation, applicants should so advise the Office.

As this letter was submitted as an advisement to the Office of an error in applicants' favor, the Office will not assess the $200.00 fee under 37 CFR 1.18(e). The Office thanks applicants for their good faith and candor in bringing this to the attention of the Office.

The application is being referred to the Office of Data Management for processing into a patent.

Telephone inquiries specific to this matter should be directed to Douglas I. Wood, Senior Petitions Attorney, at (571) 272-3231.

Nancy Johnson
Senior Petitions Attorney
Office of Petitions

UNITED STATES PATENT AND TRADEMARK OFFICE

COMMISSIONER FOR PATENTS
UNITED STATES PATENT AND TRADEMARK OFFICE
P.O. BOX 1450
ALEXANDRIA, VA 22313-1450
WWW.USPTO.GOV

Paper No. 4

MYERS BIGEL SIBLEY &
SAJOVEC
PO BOX 37428
RALEIGH, NC 27627

COPY MAILED

JUN 2 5 2003

OFFICE OF PETITIONS

In re Application of
Kim et al.
Application No. 10/389,482
Filed: March 14, 2003
Attorney Docket No. 5649-1061

ON PETITION

This decision concerns the June 11, 2003 petition under 37 CFR 1.10(c).

The petition is **GRANTED**.

The petition requests a filing date of March 14, 2003 rather than the presently accorded filing date of March 17, 2003, on the basis that the application was deposited on March 14, 2003 in the U.S. Postal Service (USPS) "Express Mail Post Office to Addressee" service pursuant to the requirements of 37 CFR 1.10. The petition is accompanied by a copy of the "Express Mail" mailing label bearing the number "EV193586380US" and containing a USPS date-stamp of March 14, 2003. The same mailing label number also appears on the application transmittal which itemizes the application papers being mailed on that date. In addition, the Office has verified through the USPS database available to the PTO that the package mailed under this label had been accepted by the USPS on March 14, 2003 at 5:46 pm. The petition is thus granted.

No petition fee is owed.

The application file is being forwarded to the Office of Initial Patent Examination for correcting the filing date to March 14, 2003, and for mailing a corrected filing receipt reflecting that filing date. Upon completion of pre-examination, the application file will be forwarded to the appropriate Technology Center for examination in due course.

Telephone inquiries should be directed to the undersigned at (703) 308-0763.

RC Tang
Petitions Attorney
Office of Petitions

UNITED STATES PATENT AND TRADEMARK OFFICE

COMMISSIONER FOR PATENTS
UNITED STATES PATENT AND TRADEMARK OFFICE
P.O. BOX 1450
ALEXANDRIA, VA 22313-1450
www.uspto.gov

Paper No. 8

PERKINS COIE LLP
PO BOX 2168
MENLO PARK, CA 94026

COPY MAILED

FEB 27 2004

OFFICE OF PETITIONS

In re Application of
Kanungo et al.
Application No. 10/389,488
Filed: March 14, 2003
Attorney Docket No. 59011-8003.US01

ON PETITION

This decision concerns the petition under 37 CFR 1.137(b), filed on February 6, 2004, to revive the above-referenced application.

The petition is **GRANTED.**

The application, upon filing, lacked a signed oath or declaration.

On April 21, 2003, a "Notice to File Missing Parts of Nonprovisional Application" was mailed, setting forth an extendable 2-month period for submitting a proper oath or declaration. No response was received on or before November 21, 2003, and no extension of time under 37 CFR 1.136(a) was obtained. The application became abandoned on June 22, 2003.

The instant petition seeks to revive the application under 37 CFR 1.137(b).

A grantable petition under 37 CFR 1.137(b), in the instant case, must be accompanied by: (1) a proper oath or declaration and the $65 surcharge (small entity) for late filing of such an oath/declaration; (2) the $665 petition fee (small entity); and (3) a statement that the entire delay in filing the oath/declaration from its due date until the filing of a grantable §1.137(b) petition was unintentional.

The instant petition meets the above requirements and is thus granted.

The application file is being forwarded to Technology Center 2100 for examination in due course.

Telephone inquiries should be directed to the undersigned at (703) 308-0763.

RC Tang
Petitions Attorney
Office of Petitions

UNITED STATES PATENT AND TRADEMARK OFFICE

COMMISSIONER FOR PATENTS
UNITED STATES PATENT AND TRADEMARK OFFICE
P.O. BOX 1450
ALEXANDRIA, VA 22313-1450
www.uspto.gov

Paper No. 5

Pitney Bowes Inc.
Intellectual Property & Technology Law Department
35 Waterview Drive
P.O. Box 3000
Shelton, CT 06484

COPY MAILED

AUG 25 2003

OFFICE OF PETITIONS

In re Application of	:
Pierce, Blue and Robinson	: DECISION REFUSING
Application No. 10/389,498	: STATUS UNDER
Filed: March 14, 2003	: 37 CFR 1.47(a)
Attorney Docket No. F-641	:
For: Method for Managing the Annotation of Documents	:

This is a decision on the petition under 37 CFR 1.47(a), filed June 26, 2003.

The petition is **DISMISSED**.

Any request for reconsideration of this decision must be submitted within TWO (2) MONTHS from the mail date of this decision. Extensions of time under 37 CFR 1.136(a) are permitted. Any response should be entitled "Request for Reconsideration of Petition Under 37 CFR 1.47(a)" and may include an oath or declaration executed by the inventor. **Failure to respond will result in abandonment of the application.**

A grantable petition under 37 CFR 1.47(a) requires

(1) proof that the non-signing inventor cannot be found or reached after diligent effort or that the inventor refuses to sign after having been presented with the application papers (specification, claims, and drawings),
(2) a proper oath or Declaration executed by the available joint inventor(s),
(3) the fee of $130 as specified in 37 CFR § 1.17(h), and
(4) the last known address of the omitted inventor(s).

In addition to the above requirements, the signing inventors must sign the declaration on behalf of the non-signing inventor. See MPEP 409.03(a).

The instant petition fails to satisfy (1).

As to item (1), petitioner must establish that the non-signing inventor refused to sign the oath or declaration after being presented with the application papers. Petitioner has failed to establish that the non-signing inventor was presented with a copy of the application. An inventor cannot sign a declaration stating he or she has "reviewed and understands the application papers" when the inventor has not been presented with a copy of the application and therefore has not reviewed the application. Refusal within the meaning of 37 CFR 1.47 requires that the inventor be presented with the application papers and given adequate time to review the contents of the application. Until the inventor reviews the papers and reads the specification and claims, he cannot know if he is actually an inventor of the claimed invention. Petitioner should send a copy of the application to the inventor along with instructions setting a deadline or a statement that no response will constitute a refusal. This sort of ultimatum lends support to a finding of refusal by

conduct. The proof of the pertinent events should be made by a statement of someone with firsthand knowledge of the events and should include documentary evidence, such as a certified mail return receipt, cover letter of instructions, telegram, etc.

Petitioner should note that when there is an express oral refusal, that fact, along with the time and place of the refusal, must be stated in an affidavit or declaration by the party to whom the refusal was made. When there is an express written refusal, a copy of the document evidencing that refusal must be made part of the affidavit or declaration. If the non-signing inventor gives a reason for refusing to sign the application oath or declaration, that reason should be stated in the affidavit or declaration.

In order to expedite consideration, petitioner may wish to submit the renewed petition under 37 CFR 1.47 by facsimile transmission to the telephone number indicated below and to the attention of the undersigned.

Further correspondence with respect to this matter should be addressed as follows:

By mail: Mail Stop Petition
Commissioner for Patents
P.O. Box 1450
Alexandria, VA 22313-1450

By facsimile: (703) 308-6916
Attn: Office of Petitions

Telephone inquiries should be directed to Petitions Attorney Steven Brantley at (703) 306-5683.

Charles Steven Brantley
Petitions Attorney
Office of Petitions

UNITED STATES PATENT AND TRADEMARK OFFICE

Commissioner for Patents
United States Patent and Trademark Office
P.O. Box 1450
Alexandria, VA 22313-1450
www.uspto.gov

Pitney Bowes Inc.
Intellectual Property & Technology Law Department
35 Waterview Drive
P.O. Box 3000
Shelton, CT 06484

COPY MAILED

MAY 23 2006

OFFICE OF PETITIONS

Decision According Status
Under 37 CFR 1.47(a) and
Reviving Application

In re Application of :
Pierce, Blue, and Robinson :
Application No. 10/389,498 :
Filed: March 14, 2003 :
Attorney Docket No. F-641 :
For: Method for Managing the :
Annotation of Documents :

This is a decision on the petition under 37 CFR 1.47(a) and the petition under 37 CFR 1.137(b) filed July 25, 2005.

The petition under 37 CFR 1.47(a) is **granted**.

The petition under 37 CFR 1.137(b) is **granted**.

Petition under 37 CFR 1.47

The above-identified application and papers have been reviewed and found in compliance with 37 CFR 1.47(a). This application is hereby accorded Rule 1.47(a) status.

As provided in Rule 1.47(c), this Office will forward notice of this application's filing to the non-signing inventor at the address given in the petition. Notice of the filing of this application will also be published in the Official Gazette.

Petition under 37 CFR 1.137(b)

This application became abandoned for failure to timely reply within two months to the "Decision Refusing Status Under 37 CFR 1.47(a)," mailed on August 25, 2003. An extension of time under the provisions of 37 CFR 1.136(a) was not obtained. Accordingly, this application became abandoned on October 26, 2003. A Notice of Abandonment was mailed on July 14, 2005.

The instant petition requests revival of the application.

Petitioner has met the requirements to revive the above-identified application pursuant to 37 CFR 1.137(b). Therefore, the petition is granted and the application is revived.

The Office of Initial Patent Examination will be informed of the instant decision so that it may continue to prepare the application for examination.

Telephone inquiries regarding this communication should be directed to Petitions Attorney Steven Brantley at (571) 272-3203.

Charles Steven Brantley
Senior Petitions Attorney
Office of Petitions

UNITED STATES PATENT AND TRADEMARK OFFICE

Commissioner for Patents
United States Patent and Trademark Office
P.O. Box 1450
Alexandria, VA 22313-1450
www.uspto.gov

Myers Bigel Sibley & Sajovec
PO Box 37428
Raleigh NC 27627

COPY MAILED

NOV 1 2 2003

OFFICE OF PETITIONS

In re Application of :
Radhakrishnan et al. :
Application No. 10/389,499 :
Filed: March 14, 2003 :
Attorney Docket No. 9233-71IP2 :

DECISION ON PETITION

This is a decision on the petition under 37 CFR 1.10, filed July 24, 2003, requesting that the above-identified application be accorded a filing date of March 14, 2003, rather than the presently accorded filing date of March 17, 2003.

Petitioner alleges that the application was deposited in Express Mail service on March 14, 2003. In support of the allegation, the petition is accompanied by a copy of Express Mail label No. EV193628204US. The "date-in" on the Express Mail label is blank; however, the label contains a United States Postal Service (USPS) stamp of March 14, 2003. The same Express Mail label number was placed on the original application papers located in the official file.

In view of the above, the petition is **granted**. No petition fee is necessary.

The Office of Initial Patent Examination will be notified to correct the filing date to March 14, 2003, and for the mailing of a corrected filing receipt.

Telephone inquiries should be directed to the undersigned at (703) 306-5589.

Christina Tartera Donnell

Christina Tartera Donnell
Senior Petitions Attorney
Office of Petitions

UNITED STATES PATENT AND TRADEMARK OFFICE

UNITED STATES DEPARTMENT OF COMMERCE
United States Patent and Trademark Office
Address: COMMISSIONER FOR PATENTS
P.O. Box 1450
Alexandria, Virginia 22313-1450
www.uspto.gov

APPL NO.	FILING OR 371 (c) DATE	ART UNIT	FIL FEE REC'D	ATTY.DOCKET NO	DRAWINGS	TOT CLMS	IND CLMS
10/389,499	03/14/2003	1654	3748	9233-71IP2	40	142	11

CONFIRMATION NO. 3661

CORRECTED FILING RECEIPT

OC000000011377300

20792
MYERS BIGEL SIBLEY & SAJOVEC
PO BOX 37428
RALEIGH, NC 27627

Date Mailed: 11/28/2003

Receipt is acknowledged of this regular Patent Application. It will be considered in its order and you will be notified as to the results of the examination. Be sure to provide the U.S. APPLICATION NUMBER, FILING DATE, NAME OF APPLICANT, and TITLE OF INVENTION when inquiring about this application. Fees transmitted by check or draft are subject to collection. Please verify the accuracy of the data presented on this receipt. **If an error is noted on this Filing Receipt, please write to the Office of Initial Patent Examination's Filing Receipt Corrections, facsimile number 703-746-9195. Please provide a copy of this Filing Receipt with the changes noted thereon. If you received a "Notice to File Missing Parts" for this application, please submit any corrections to this Filing Receipt with your reply to the Notice. When the USPTO processes the reply to the Notice, the USPTO will generate another Filing Receipt incorporating the requested corrections (if appropriate).**

Applicant(s)

Balasingam Radhakrishnan, Chapel Hill, NC;
Richard Soltero, Holly Springs, NC;
Nnochiri N. Ekwuribe, Cary, NC;
Monica Puskas, Spring Hope, NC;
Diti Sangal, Morrisville, NC;

Domestic Priority data as claimed by applicant

This application is a CIP of 10/382,022 03/05/2003
which is a CIP of 10/036,744 12/21/2001
which claims benefit of 60/318,197 09/07/2001

Foreign Applications

If Required, Foreign Filing License Granted: 05/21/2003

Projected Publication Date: 12/04/2003

Non-Publication Request: No

Early Publication Request: No

Title

Insulin polypeptide-oligomer conjugates, proinsulin polypeptide-oligomer conjugates and methods of synthesizing same

Preliminary Class

435

LICENSE FOR FOREIGN FILING UNDER
Title 35, United States Code, Section 184
Title 37, Code of Federal Regulations, 5.11 & 5.15

GRANTED

The applicant has been granted a license under 35 U.S.C. 184, if the phrase "IF REQUIRED, FOREIGN FILING LICENSE GRANTED" followed by a date appears on this form. Such licenses are issued in all applications where the conditions for issuance of a license have been met, regardless of whether or not a license may be required as set forth in 37 CFR 5.15. The scope and limitations of this license are set forth in 37 CFR 5.15(a) unless an earlier license has been issued under 37 CFR 5.15(b). The license is subject to revocation upon written notification. The date indicated is the effective date of the license, unless an earlier license of similar scope has been granted under 37 CFR 5.13 or 5.14.

This license is to be retained by the licensee and may be used at any time on or after the effective date thereof unless it is revoked. This license is automatically transferred to any related applications(s) filed under 37 CFR 1.53(d). This license is not retroactive.

The grant of a license does not in any way lessen the responsibility of a licensee for the security of the subject matter as imposed by any Government contract or the provisions of existing laws relating to espionage and the national security or the export of technical data. Licensees should apprise themselves of current regulations especially with respect to certain countries, of other agencies, particularly the Office of Defense Trade Controls, Department of State (with respect to Arms, Munitions and Implements of War (22 CFR 121-128)); the Office of Export Administration, Department of Commerce (15 CFR 370.10 (j)); the Office of Foreign Assets Control, Department of Treasury (31 CFR Parts 500+) and the Department of Energy.

NOT GRANTED

No license under 35 U.S.C. 184 has been granted at this time, if the phrase "IF REQUIRED, FOREIGN FILING LICENSE GRANTED" DOES NOT appear on this form. Applicant may still petition for a license under 37 CFR 5.12, if a license is desired before the expiration of 6 months from the filing date of the application. If 6 months has lapsed from the filing date of this application and the licensee has not received any indication of a secrecy order under 35 U.S.C. 181, the licensee may foreign file the application pursuant to 37 CFR 5.15(b).

UNITED STATES PATENT AND TRADEMARK OFFICE

Commissioner for Patents
United States Patent and Trademark Office
P.O. Box 1450
Alexandria, VA 22313-1450
www.uspto.gov

COPY MAILED

JUN 0 4 2008

OFFICE OF PETITIONS

MONTGOMERY, MCCRACKEN, WALKER & RHOADS, LLP
123 SOUTH BROAD STREET
AVENUE OF THE ARTS
PHILADELPHIA, PA 19109

In re Application of Steffier et al. :
Application No. 10/389,501 : Decision on Petition
Filing Date: March 14, 2003 :
Attorney Docket No. 61189.00003(KEY1) :

This is a decision on the petition under 37 CFR 1.137(b), filed February 11, 2008, to revive the above-identified application.

The petition is **DISMISSED**.

Any request for reconsideration must be submitted within TWO (2) MONTHS from the mail date of this decision. No further petition fee is required for the request. Extensions of time under 37 CFR 1.136(a) are permitted. The reconsideration request should include a cover letter entitled "Renewed Petition under 37 CFR 1.137(b)." This is **not** final agency action within the meaning of 5 U.S.C. § 704.

The Office mailed a final Office action on June 11, 2007. The Office action set a shortened statutory period for reply of three (3) months.

An amendment and request for a one-month extension of time were filed October 9, 2007.

As demonstrated by the later mailing of an Advisory Action on January 2, 2008, the October 9, 2007 reply was an improper reply to the final Office action because it failed to prima facie place the application in condition for allowance.

Since the October 9, 2007 reply was an improper reply to the final Office action, the application became abandoned on October 12, 2007.

The instant petition requests the application be revived.

A grantable petition under 37 CFR 1.137(b) must be accompanied by:

(1) the reply required to the outstanding Office action or notice, unless previously filed,
(2) the petition fee,

(3) a statement that the entire delay in filing the required reply from the due date for the reply until the filing of a grantable petition pursuant to 37 CFR 1.137(b) was unintentional, and

(4) a terminal disclaimer and fee if the application was filed on or before June 8, 1995 or if the application is a design application.

The instant petition fails to comply with items (1) and (3).

As to item (1), petitioner has not filed a proper reply to the final Office action. Petitioner has only filed a copy of the reply previously filed October 9, 2007. Petitioner asserts the abandonment of the application was unintentional because the application became abandoned as a result of petitioner's inadvertent failure to file a Request for Continued Examination with the October 9, 2007 reply. However, the instant petition does not include a RCE.

Any request for reconsideration must include a proper reply to the final Office action.

As to item (3), petitioner has failed to comply with 37 CFR 1.137(b)(3) which states a petition must include "a statement that the entire delay in filing the required reply from the due date for the reply until the filing of a grantable petition pursuant to 37 CFR 1.137(b) [was] unintentional."

Any request for reconsideration should explicitly state that the entire delay in filing the required reply from the due date for the reply until the filing of the petition was unintentional.

Petitioner submitted $230 for an extension of time. However, payment for an extension of time is unnecessary when reviving an application. Therefore, the Office has credited the $230 to petitioner's deposit account.

Further correspondence with respect to this matter should be addressed as follows:

By mail: Mail Stop Petition
Commissioner for Patents
P.O. Box 1450
Alexandria, VA 22313-1450

By facsimile: (571) 273-8300
Attn: Office of Petitions

Telephone inquiries regarding this communication should be directed to Petitions Attorney Steven Brantley at (571) 272-3203.

Charles Steven Brantley
Senior Petitions Attorney
Office of Petitions

UNITED STATES PATENT AND TRADEMARK OFFICE

Commissioner for Patents
United States Patent and Trademark Office
P.O. Box 1450
Alexandria, VA 22313-1450
www.uspto.gov

MONTGOMERY, MCCRACKEN, WALKER & RHOADS, LLP
123 SOUTH BROAD STREET
AVENUE OF THE ARTS
PHILADELPHIA, PA 19109

COPY MAILED

AUG 1 1 2008

In re Application of Steffier et al. :
Application No. 10/389,501 : Decision on Petition
Filing Date: March 14, 2003 :
Attorney Docket No. 61189.00003(KEY1) :

This is a decision on the petition under 37 CFR 1.137(b), filed July 10, 2008, to revive the above-identified application.

The petition is **granted**.

The Office mailed a final Office action on June 11, 2007. The Office action set a shortened statutory period for reply of three (3) months.

An amendment and request for a one-month extension of time were filed October 9, 2007.

As demonstrated by the later mailing of an Advisory Action on January 2, 2008, the October 9, 2007 reply was an improper reply to the final Office action because it failed to prima facie place the application in condition for allowance.

Since the October 9, 2007 reply was an improper reply to the final Office action, the application became abandoned on October 12, 2007.

The instant petition requests the application be revived.

A grantable petition under 37 CFR 1.137(b) must be accompanied by:

(1) the reply required to the outstanding Office action or notice, unless previously filed,
(2) the petition fee,
(3) a statement that the entire delay in filing the required reply from the due date for the reply until the filing of a grantable petition pursuant to 37 CFR 1.137(b) was unintentional, and
(4) a terminal disclaimer and fee if the application was filed on or before June 8, 1995 or if the application is a design application.

Petitioner has filed a reply to the outstanding office action in the form of a RCE and submission. Petitioner has submitted the required petition fee. Petition has stated the entire delay in filing the required reply from the due date for the reply until the filing of a grantable petition was unintentional.

Petitioner has met the requirements to revive application pursuant to 37 CFR 1.137(b). Therefore, the petition is granted and the application is revived

Technology Center Art Unit 1639 will be informed of the instant decision and the application will be further examined in due course.

Telephone inquiries regarding this communication should be directed to Petitions Attorney Steven Brantley at (571) 272-3203.

Charles Steven Brantley
Senior Petitions Attorney
Office of Petitions

UNITED STATES PATENT AND TRADEMARK OFFICE

Commissioner for Patents
United States Patent and Trademark Office
P.O. Box 1450
Alexandria, VA 22313-1450
www.uspto.gov

ALLEN R. KIPNES, ESQ.
WATOV & KIPNES P.C.
P.O. BOX 247
PRINCETON JUNCTION, NJ 08550

COPY MAILED

FEB 0 4 2008

OFFICE OF PETITIONS

In re Application of	:	
Mistry, Atul	:	
Application No. 10/389,535	:	DECISION ON PETITION
Filed: March 14, 2003	:	
Attorney Docket No. (PC25115)-07-LAV	:	

This is a decision on the petition under the unintentional provisions of 37 CFR 1.137(b), filed December 20, 2007, to revive the above-identified application.

The petition is **GRANTED**.

The petition satisfies the requirements of 37 CFR 1.137(b) in that petitioner has supplied (1) the reply in the form of an Election, (2) the petition fee, and (3) a proper statement of unintentional delay.

Telephone inquiries concerning this decision should be directed to the undersigned at (571) 272-3206.

This matter is being referred to Technology Center 1794 for further examination on the merits.

Liana Walsh
Petitions Examiner
Office of Petitions

UNITED STATES PATENT AND TRADEMARK OFFICE

Commissioner for Patents
United States Patent and Trademark Office
P.O. Box 1450
Alexandria, VA 22313-1450
www.uspto.gov

George O. Saile
28 Davis Avenue
Poughkeepsie NY 12603

COPY MAILED

SEP 30 2005

OFFICE OF PETITIONS

In re Application of	:	
Mou-Shiung Lin	:	
Application No. 10/389,543	:	ON PETITION
Filed: March 14, 2003	:	
Attorney Docket No. MS98-002CCBB	:	

This is a decision on the petition under 37 CFR 1.78(a)(3), filed on May 2, 2005, to accept an unintentionally delayed claim under 35 USC 120 for the benefit of prior- filled nonprovisional Application no. 09/251,183 as set forth in the amendment filed March 15, 2004.

The petition is **GRANTED**.

A petition for acceptance of a claim for late priority under 37 CFR §§1.78(a)(3) is only applicable to those applications filed on or after November 29, 2000. Further, the petition is appropriate only after the expiration of the period specified in 37 CFR 1.78(a)(2)(ii). In addition, the petition under 37 CFR §§1.78(a)(3) must be accompanied by:

> **1)** the reference required by 35 U.S.C. § 120 and 37 CFR 1.78(a)(2)(I) of the prior-filed application, unless previously submitted;
> **(2)** the surcharge set forth in § 1.17(t); and
> **(3)** a statement that the entire delay between the date the claim was due under 37 CFR 1.78(a)(2)(ii) and the date the claim was filed was unintentional. The Commissioner may require additional information where there is a question whether the delay was unintentional.

The instant nonprovisional application was filed after November 29, 2000, and the claim herein for the benefit of priority to the prior-filed application is submitted after expiration of the period specified in 37 CFR§ 1.78(a)(2)(ii). Therefore, this is a proper petition under 37 CFR

§1.78(a)(3).

The petition complies with the requirements for a grantable petition under 37 CFR §1.78(a)(3) in that (1) a reference to the above-noted, prior-filed application has been included in an amendment to the first sentence of the specification following the title, as provided by 37 CFR 1.78(a)(2)(iii); (2) the surcharge fee required by 37 CFR 1.17(t) has been submitted; and (3) the petition contains an adequate statement of unintentional delay. Accordingly, having found that the instant petition for acceptance of an unintentionally delayed claim for the benefit of priority under 35 U.S.C. § 120 to the above-noted, prior-filed application satisfies the conditions of 37 CFR §1.78(a)(3) the petition is granted.

A corrected Filing Receipt, which includes the priority claim to the prior-filed application, accompanies this decision on petition.

Any inquiries concerning this decision may be directed to Charlema R. Grant at (571) 272-3215. All other inquiries concerning either the examination procedures or status of the application should be directed to the Technology Center.

This application is being referred to the Office of Patent Publication.

Frances Hicks
Petitions Examiner
Office of Petition

Attachment: Corrected Filing Receipt

UNITED STATES PATENT AND TRADEMARK OFFICE

Commissioner for Patents
United States Patent and Trademark Office
P.O. Box 1450
Alexandria, VA 22313-1450
www.uspto.gov

KLARQUIST SPARKMAN LLP
121 S. W. Salmon Street
Suite 1600
Portland, Oregon 97204

MAIL

FEB 27 2006

DIRECTOR OFFICE
TECHNOLOGY CENTER 2600

In re Application of
Peter-Pike J. Sloan, *et. al*
Serial No.: 10/389,553
Filed: March 14, 2003
For: **GRAPHICS IMAGE RENDERING WITH RADIANCE SELF-TRANSFER FOR LOW-FREQUENCY LIGHTING ENVIRONMENTS**

DECISION ON PETITION
ACCEPTANCE OF COLOR DRAWINGS

This is a decision on the petition under 37 CFR §1.183 filed November 30, 2005, which is being treated as a petition under 37 C.F.R. § 1.84(a)(2), requesting acceptance of color drawings.

The petition requests that the color drawings identified in Figures 9, 10, 12 and 13, be accepted in lieu of black and white drawings.

A grantable petition under 37 C.F.R. §1.84(a)(2) must be accompanied by a fee set forth under 37 C.F.R. § 1.17(h), 3 (three) sets of the color drawings in question, and the specification must contain, or be amended to contain, the following language as the first paragraph in that portion of the specification relating to the brief description of the drawings:

"The file of this patent contains at least one drawing executed in color. Copies of this patent with color drawing(s) will be provided by the Patent and Trademark Office upon request and payment of the necessary fee."

The application file is being forwarded to the Group technical support staff for entry of the proposed amendment filed with this petition. From there, the application file will be forwarded to Drafting Division, Drawing Review Branch for review of the drawing figures in light of this decision.

The petition is GRANTED.

Dwayne Bost
Special Program Examiner
Technology Center 2600
Communications

UNITED STATES PATENT AND TRADEMARK OFFICE

COMMISSIONER FOR PATENTS
UNITED STATES PATENT AND TRADEMARK OFFICE
WASHINGTON, D.C. 20231
www.uspto.gov

Paper No. 3

Charles D. McClung
Chernoff, Vilhauer, McClung & Stenzel, LLP
1600 ODS Tower
601 S. W. Second Avenue
Portland, Oregon 97204

MAILED

JUL 31 2003

Technology Center 2100

In re Application of: Goodman et al. Application No. 10/389,555 Attorney Docket No. Filed: March 14, 2003 For: METHOD OF PROVIDING ONLINE DATABASE CONTAINING PROPRIETARY INFORMATION	))))))))	**DECISION ON PETITION TO MAKE SPECIAL UNDER 37 CFR §1.102(C) – ENVIRONMENT**

This is a decision on the petition to make special filed on June 2, 2003 under 37 CFR §1.102(c), in accordance with MPEP 708.02(V), requesting the advancement of examination of the above-identified application based on environmental quality.

The attorney of record has provided a statement alleging improvement of environmental quality because customers can use the invention for fire safety compliance and that some of the customers using this on-line database may be hospitals and health care facilities. Because these facilities may have airborne pathogens, the invention would assist hospital personnel in protecting the patients from airborne infections. It is noted the original disclosure does not disclose or claim the unique benefits found in the petition regarding health care facilities and prevention of airborne pathogens.

MPEP 708.02 (V) states in part:

> The USPTO will accord "special" status to all patent applications for inventions which materially enhance the quality of the environment of mankind by contributing to the restoration or maintenance of the basic life-sustaining natural elements, i.e., air, water, and soil....
>
> Such petitions should be accompanied by statements under 37 CFR 1.102 by the applicant, assignee, or an attorney/agent registered to practice before the Office explaining how the inventions contribute to the restoration or maintenance of one of these life-sustaining elements.

37 CFR 1.102 (c) states:

> A petition to make an application special may be filed without a fee if the basis for the petition is the applicant's age or health or that the invention will materially enhance the quality of the environment or materially contribute to the development or conservation of energy resources.

The petition fails to satisfy the criteria set forth in the cited sections because the practitioner's statements do not adequately establish the nexus between applicants' invention relating to an on-

line database and prevention of airborne pathogens. Even more significantly, the concept outlined in the petition does not rise to the level of standard set forth above of "materially" enhancing the quality of the environment by contributing to the restoration or maintenance of basic life-sustaining natural elements. It appears the applicants are focusing on the microcosmic environment in a solitary building when the true intent of this ground to advance applications for examination is to recognize applications that contribute significantly (materially) to enhancing the quality of the macrocosmic environment.

Even accepting applicants' assumption that the localized human environment would warrant advancement out of turn, the applicants have not provided adequate proof to support their contention that the invention would actually enhance the environment of certain health care facilities. While the practitioner states the air in a facility could be restricted to prevent passage of airborne pathogens through better sealing, this does not necessarily make for better air quality. For example a room completely sealed would be impervious to airborne pathogens, but carbon dioxide could build up in the room and actually create a more toxic environment for the patient.

Therefore, applicants have not met the burden of proving the invention has a benefit of materially enhancing the quality of the environment. The petition is **DISMISSED**.

Any request for reconsideration must be filed within TWO MONTHS of the mailing date of this decision. It is suggested that applicants review MPEP § 708.02 regarding other grounds available for filing a petition to make special. In particular, note MPEP § 708.02(VIII): Accelerated Examination, which does not place limitations on the subject matter of the application.

The application is being forwarded to Technology Center 2100's Central Files to await examination in its proper turn based on its effective filing date. Telephone inquiries regarding this decision should be directed to the undersigned at 703-308-0269.

Josie A. Ballato
Special Programs Examiner
Technology Center 2100
Computer Architecture, Software, and Information Security

UNITED STATES PATENT AND TRADEMARK OFFICE

Commissioner for Patents
United States Patent and Trademark Office
P.O. Box 1450
Alexandria, VA 22313-1450
www.uspto.gov

DICKSTEIN SHAPIRO MORIN & OSHINSKY
RICHARD LACAVA
41ST FLOOR
1177 AVENUE OF THE AMERICAS
NEW YORK NY 10036-2714

COPY MAILED

JUN 02 2005

OFFICE OF PETITIONS

In re Application of	:	
Jun Hattori et al	:	
Application No. 10/389,564	:	ON PETITION
Filed: March 17, 2003	:	
Attorney Docket No. M1071.1822/P1822	:	

This is a decision on the petition, filed June 1, 2005, under 37 CFR 1.313(c)(2) to withdraw the above-identified application from issue after payment of the issue fee.

The petition is **GRANTED.**

The above-identified application is withdrawn from issue for consideration of a submission under 37 CFR 1.114 (request for continued examination). See 37 CFR 1.313(c)(2).

Petitioner is advised that the issue fee paid on April 15, 2005 in the above-identified application cannot be refunded. If, however, the above-identified application is again allowed, petitioner may request that it be applied towards the issue fee required by the new Notice of Allowance.[1]

Telephone inquiries should be directed to the undersigned at (571) 272-3208.

The examiner of Technology Center AU 2816 will consider the request for continued examination under 37 CFR 1.114.

Karen Creasy

Karen Creasy
Petitions Examiner
Office of Petitions
Office of the Deputy Commissioner
for Patent Examination Policy

---

[1] The request to apply the issue fee to the new Notice may be satisfied by completing and returning the new Issue Fee Transmittal Form PTOL-85(b), which includes the following language thereon: "Commissioner for Patents is requested to apply the Issue Fee and Publication Fee (if any) or re-apply any previously paid issue fee to the application identified above." Petitioner is advised that, whether a fee is indicated as being due or not, the Issue Fee Transmittal Form **must** be completed and timely submitted to avoid abandonment. Note the language in bold text on the first page of the Notice of Allowance and Fee(s) Due (PTOL-85).

UNITED STATES PATENT AND TRADEMARK OFFICE

COMMISSIONER FOR PATENTS
UNITED STATES PATENT AND TRADEMARK OFFICE
P.O. BOX 1450
ALEXANDRIA, VA 22313-1450
www.uspto.gov

Paper No. _____

Date : June 2, 2005

TO : Director, Office of Patent Publication

FROM : Office of the Deputy Commissioner
for Patent Examination Policy

SUBJECT : Withdrawal from Issue of

Applicant(s) :Jun Hattori et al
Application No. :10/389,564
Filed :March 17, 2003

The above-identified application has been assigned Patent No. 6,903,622 and an issue date of June 7, 2005.

It is hereby directed that this application be withdrawn from issue at the request of the applicant.

Do not refund the issue fee.

The following erratum should be published in the Official Gazette if the above-identified application is published in the OG of June 7, 2005:

"All reference to Patent No. 6,903,622 to Jun Hattori et al of Japan for LOW-TEMPERATURE HIGH-FREQUENCY AMPLIFYING APPARATUS AND WIRELESS APPARATUS appearing in the Gazette of June 7, 2005 should be deleted since no patent was granted."

Karen Creasy

Karen Creasy
Petitions Examiner
Office of Petitions
Office of the Deputy Commissioner
for Patent Examination Policy

cc: Paul Harrison, MDW-4B03, (FAX-273-5468
Deneise Boyd, MDE-3D39 (FAX-273-5124)
Mary Louise McAskill, ST-8C15 (FAX 305-4372)
Niomi Farmer, ST-8C14 (FAX-305-4372)
Mary E. Johnson (Cookie), MDE-7C71 (FAX 273-0038)
Duane Davis P/OPC MDE-7D89
Tamara Greene, ST-8C13

UNITED STATES PATENT AND TRADEMARK OFFICE

Commissioner for Patents
United States Patent and Trademark Office
P.O. Box 1450
Alexandria, VA 22313-1450
www.uspto.gov

TIMOTHY A. KIECK
3632 STILLWATER CIRCLE
WAUKESHA WI 53189

COPY MAILED

JUN 21 2006

OFFICE OF PETITIONS

In re Application of
Timothy A. Kieck :
Application No. 10/389,603 : ON PETITION
Filed: March 17, 2003 :
Title of Invention: **APPLIANCE FOR THE UNIVERSAL STORAGE OF BAKED GOODS WITH A BUILT IN VACUUM PUMP** :

This is a decision on the petition filed April 13, 2006, to withdraw the holding of abandonment under 37 CFR 1.181.

The petition to withdraw the holding of abandonment is **DISMISSED**.

The application was held abandoned on November 28, 2005, for failure to file a timely response to the Final Office Action mailed, August 25, 2005. The office action set a three month shortened statutory period. Accordingly, a Notice of Abandonment was mailed on April 13, 2006.

In the petition to withdraw the holding of abandonment under 37 CFR 1.181, petitioner asserts that a communication filed July 28, 2005, after the mailing of a non-Final Office Action, was not intended to be a response to that Office Action. Instead, petitioners argue, that the Examiner of record incorrectly interpreted it as such and issued a Final Office Action thereafter. Petitioners argue that the application was held abandoned due to PTO error in the interpretation.

To the contrary, this application is abandoned because petitioner did not follow the proper course of action which would have been, 1) to file a proper response to the non-Final Office Action mailed June 29, 2005 and in the absence thereof, 2) to file a proper response to the Final Office Action mailed August 25, 2005.

Additionally, notwithstanding the option of filing proper responses to the office actions mailed, petitioner could have petitioned the Technology Center, while the application was still pending, to withdraw the finality of the office action mailed August 25, 2005. See MPEP 706.07.

Furthermore, the response filed to the Final Office Action mailed August 25, 2005 was labeled as an Amendment and thus, after the review, an Advisory Action issued on October 11, 2005 noting that the response filed September 21, 2005 failed to place the application in condition for allowance.

Petitioners are advised that in the absence of the Final Office Action mailed August 25, 2005 being withdrawn by the USPTO, by law a proper and timely response was required. The failure to file a response to the Final Office Action caused the application to become abandoned, not the Examiner's interpretation of the communication filed July 28, 2005.

Applicants are not afforded an opportunity to withhold a written response to an office communication even if they think the office communication mailed is in error. In view thereof, the holding of abandonment will not be withdrawn.

Petitioner may wish to file a petition to revive under 37 CFR 1.137(a) or (b). Section 1.137(b) now provides that where the delay in reply was unintentional, a petition may be filed to revive an abandoned application or a lapsed patent pursuant to 37 CFR 1.137(b). A grantable petition pursuant to 37 CFR 1.137(b) must be accompanied by:

> (1) the required reply, unless previously filed. In a nonprovisional application abandoned for failure to prosecute, the required reply may be met by the filing of a continuing application. In an application or patent, abandoned or lapsed for failure to pay the issue fee or any portion thereof, the required reply must be the payment of the issue fee or any outstanding balance thereof;
>
> (2) the petition fee as set forth in 37 CFR 1.17(m) ($675.00);
>
> (3) a statement that the entire delay in filing the required reply from the due date for the reply until the filing of a grantable petition pursuant to 37 CFR 1.137(b) was unintentional. The Commissioner may required additional information where there is a question whether the delay was unintentional; and
>
> (4) any terminal disclaimer (and fee as set forth in 37 CFR 1.20(d)) required pursuant to 37 CFR 1.137(c)).

The filing of a petition under the unintentional standard cannot be intentionally delayed and therefore should be filed promptly. A person seeking revival due to unintentional delay cannot make a statement that the delay was unintentional unless the entire delay, including the delay from the date it was discovered that the application was abandoned until the filing of the petition to revive under 37 CFR 1.137(b), was unintentional. A statement that the delay was unintentional is not appropriate if petitioner intentionally delayed the filing of a petition for revival under 37 CFR 1.137(b).

Further correspondence with respect to this matter should be addressed as follows:

By mail: Mail Stop Petition
Commissioner for Patents
P.O. Box 1450
Alexandria, VA 22313-1450

By FAX: (571) 273-8300

Telephone inquiries concerning this matter may be directed to the undersigned Petitions Attorney at (571) 272-3212.

Patricia Faison-Ball

Patricia Faison-Ball
Senior Petitions Attorney
Office of Petitions

UNITED STATES PATENT AND TRADEMARK OFFICE

Commissioner for Patents
United States Patent and Trademark Office
P.O. Box 1450
Alexandria, VA 22313-1450
www.uspto.gov

TIMOTHY A. KIECK
3632 STILLWATER CIRCLE
WAUKESHA WI 53189

COPY MAILED
OCT 2 0 2006
OFFICE OF PETITIONS

In re Application of
Timothy A. Kieck :
Application No. 10/389,603 : ON PETITION
Filed: March 17, 2003 :
Title of Invention: **APPLIANCE FOR THE UNIVERSAL STORAGE OF BAKED GOODS WITH A BUILT IN VACUUM PUMP** :

This is a decision on the petition under 37 CFR 1.137(b)[1], filed August 9, 2006, to revive the above-identified application.

The petition is **GRANTED**.

The application was held abandoned on November 28, 2005, for failure to file a timely response to the Final Office Action mailed, August 25, 2005. The office action set a three month shortened statutory period. Accordingly, a Notice of Abandonment was mailed on April 13, 2006.

---

[1]Effective December 1, 1997, the provisions of 37 CFR 1.137(b) now provide that where the delay in reply was unintentional, a petition may be filed to revive an abandoned application or a lapsed patent pursuant to 37 CFR 1.137(b). A grantable petition filed under the provisions of 37 CFR 1.137(b) must be accompanied by:

(1) the required reply, unless previously filed. In a nonprovisional application abandoned for failure to prosecute, the required reply may be met by the filing of a continuing application. In an application or patent, abandoned or lapsed for failure to pay the issue fee or any portion thereof, the required reply must be the payment of the issue fee or any outstanding balance thereof.

(2) the petition fee as set forth in 37 CFR 1.17(m);

(3) a statement that the entire delay in filing the required reply from the due date for the reply until the filing of a grantable petition pursuant to 37 CFR 1.137(b) was unintentional. The Commissioner may required additional information where there is a question whether the delay was unintentional; and

(4) any terminal disclaimer (and fee as set forth in 37 CFR 1.20(d)) required pursuant to 37 CFR 1.137(c)).

The petition satisfies the requirements of 37 CFR 1.137(b) in that petitioner has supplied (1) the reply in the form of a continuation application under 37 CFR 1.53(b); (2) the petition fee of $750; and (3) an adequate statement of unintentional delay.

Since this application is being revived for purposes of continuity only and since continuity has been established by this decision reviving the application, the application is again abandoned in favor of continuation application no.11/501,251 filed August 9, 2006, pursuant to the provisions of 37 CFR 1.53(b).

This matter is being referred to Technology Center 1761 for processing of the continuation application filed August 9, 2006.

Telephone inquiries related to this decision should be directed to the undersigned Petitions Attorney at (571) 272-3212.

Patricia Faison-Ball

Patricia Faison-Ball
Senior Petitions Attorney
Office of Petitions

UNITED STATES PATENT AND TRADEMARK OFFICE

Commissioner for Patents
United States Patent and Trademark Office
P.O. Box 1450
Alexandria, VA 22313-1450
www.uspto.gov

NE

Mailed: 5/16/05

In re application of	:	
Lester Cornelius	:	DECISION ON
Serial No. 10/389,609	:	PETITION
Filed: March 17, 2003	:	
For: CLEANING BLADE LUBRICANT	:	
	:	

This is a response to the PETITION TO WITHDRAW HOLDING OF ABANDONMENT filed March 25, 2005. The petitioners requests that the abandonment, as set forth in the Notice of Abandonment of March 4, 2005, for failure to timely pay the required issue fee and publication within the statutory period of three months from the mailing of date of the Notice of Allowance, mailed October 27, 2004 be withdrawn. The petitioner asserts that copies of documents showing that the issue fee was in fact paid on December 13, 2004 however, the check has not cleared. The petitioner concludes that the check was lost in the Christmas mailing season and a duplicate check is also submitted.

DECISION

The instant request has been accepted as a petition to withdraw the holding of abandonment under the provisions of 37 CFR 1.181 (no fee) - no abandonment-in-fact. A review of the petition, eDan file, and Palm System reveals 1) only one paper, the petition itself, was submitted on March 25,2005, 2) there is no record of copies of documents submitted with the petition date March 25, 2005, 3) there is no evidence showing the issue fee was paid December 13, 2004 , 4) there is no record of a duplicate check submitted with the petition of March 25, 2005, and 5) there is no record or evidence of any payment of the issue fee and Publication fee. The PTO fax number is 703-872-9306

The Petition is **DISMISSED**.

Jacqueline Stone, Director
Technology Center 1700
Chemical and Materials Engineering

Temko& Temko
22 Marion Road
West port, CT 06880

UNITED STATES PATENT AND TRADEMARK OFFICE

COMMISSIONER FOR PATENTS
UNITED STATES PATENT AND TRADEMARK OFFICE
P.O. BOX 1450
ALEXANDRIA, VA 22313-1450
www.uspto.gov

BROUILLETTE KOSIE PRINCE
25th Floor
1100 Rene-Levesque Boulevard West
Montreal QC H3B 5C9 CA CANADA

MAIL

NOV 1 8 2003

DIRECTOR OFFICE
TECHNOLOGY CENTER 2600

In re Application of	:	
Daniel Langlois	:	
Application No. 10/389,614	:	DECISION
Filed: March 17, 2003	:	ON PETITION
For: **PORTABLE DISPLAY SYSTEM**	:	

This is a decision on the petition filed October 3, 2003, treated as a petition filed under 37 CFR § 1.102(d) to make the application special.

A grantable petition under 37 CFR § 1.102(d) and MPEP § 708.02, section II: Infringement, must be accompanied by the required fee and a statement alleging:

(1) that there is an infringing device or product actually on the market or method in use;

(2) that a rigid comparison of the alleged infringing device, product, or method with the claims of the application has been made, and that, in his or her opinion, some of the claims are unquestionably infringed; and

(3) that he or she has made or caused to be made a careful and thorough search of the prior art or has a good knowledge of the pertinent prior art. Further, Applicant must provide a copy of each of the references deemed most closely related to the subject matter encompassed by the claims if the references are not already of record.

The petitioner does not meet requirements (1) through (3) above. Petitioner states that infringement "..may be undertaken by a third party." This statement does not satisfy requirement (1) in which there is an infringing device actually on the market or method in use. Moreover, petition fails to address requirements (2) and (3).

Accordingly, the petition is **DENIED**.

Any request for reconsideration must be filed within TWO MONTHS from the date of this decision.

The application is being forwarded to the Technology Center's central files to await action in its normal turn.

Dwayne D. Bost
Special Program Examiner
Technology Center 2600
Communications
(703) 305-4778

UNITED STATES PATENT AND TRADEMARK OFFICE

COMMISSIONER FOR PATENTS
UNITED STATES PATENT AND TRADEMARK OFFICE
P.O. BOX 1450
ALEXANDRIA, VA 22313-1450
www.uspto.gov

LEYDIG VOIT & MAYER, LTD
TWO PRUDENTIAL PLAZA, SUITE 4900
180 NORTH STETSON AVENUE
CHICAGO, IL 60601-6780

COPY MAILED

MAY 03 2005

OFFICE OF PETITIONS

In re Application of :
Yi Min Wang, et al. :
Application No. 10/389,623 :
Filed: March 14, 2003 :
Attorney Docket No. 219426 :

DECISION GRANTING PETITION

This is a decision on the petition filed February 22, 2005, requesting that the above-identified application be accorded a filing date of March 14, 2003, instead of the presently accorded date of March 13, 2003.

Applicants request the later filing date on the basis that the application was purportedly deposited with the U. S. Postal Service (USPS) as Express Mail on March 14, 2003. In support, applicants provide, inter alia, a copy of the Express Mail label, No. EU 109585801 US and a copy of the USPS Track/Confirm record. The same Express Mail receipt number appears on the application papers found in the file. It is noted that while the "date-in" entered on the present copy of the Express Mail mailing label includes an alteration, the copy of the USPS Track/Confirm record clearly shows that the package bearing Express Mail label No. EU 109585801 US was accepted on March 14, 2003 at the USPS in Seattle, WA 98101 at 4:53pm.

In view of the above, the evidence is convincing that the application was deposited as "Express Mail" with the U.S. Postal Service on March 14, 2003.

The petition is GRANTED.

The application is being referred to Initial Patent Examination Division for correction of the filing date to **March 14, 2003**, and issuance of a Corrected Official Filing Receipt.

Telephone inquires related to this decision should be directed to the undersigned at (571) 272-3204. Telephone inquiries related to OIPE processing should be directed to their hotline at (703) 308-1202.

Sherry D. Brinkley
Petitions Examiner
Office of Petitions
Office of the Deputy Commissioner
for Patent Examination Policy

UNITED STATES PATENT AND TRADEMARK OFFICE

COMMISSIONER FOR PATENTS
UNITED STATES PATENT AND TRADEMARK OFFICE
P.O. BOX 1450
ALEXANDRIA, VA 22313-1450
www.uspto.gov

Paper No. 5

MORGAN & FINNEGAN, L.L.P.
345 Park Avenue
New York, NY 10154-0053

COPY MAILED

MAY 0 5 2004

OFFICE OF PETITIONS

ON PETITION

In re Application of :
Jung et al. :
Application No. 10/389,624 :
Filed: March 13, 2003 :
Attorney Docket No. 4208-4121 :

This is a decision in response to the paper entitled, "Petition Under 37 C.F.R. 1.182" filed April 5, 2004, which is being treated as a petition under 37 CFR 1.10 to accord the above-identified application a filing date of March 14, 2003, instead of March 13, 2003.

Paragraph (c) of 37 CFR 1.10 sets forth procedures for filing a petition for a filing date where there is a discrepancy between the filing date initially accorded by the Office and the "date-in" entered by the USPS. Paragraph (d) of 37 CFR 1.10 sets forth procedures for filing a petition for a filing date where the "date-in" is incorrectly entered or omitted by the USPS.

Petitioner has failed to provide evidence establishing the "date-in" entered by the USPS. Specifically, petitioner has failed to provide the PTO with a copy of the express mail label. Paragraph (b) of 37 CFR 1.10 provides,

> Correspondence should be deposited directly with an employee of the USPS to ensure that the person depositing the correspondence receives a legible copy of the "Express Mail" mailing label with the "date-in" clearly marked. Persons dealing indirectly with the employees of the USPS (such as by deposit in an "Express Mail" drop box) do so at the risk of not receiving a copy of the "Express Mail" mailing label with the desired "date-in" clearly marked.

Since an express mail label has not been provided, petitioner has failed to establish the "date-in" entered by the USPS. Therefore, petitioner has failed to establish a discrepancy between the filing date accorded by the Office and the "date-in" entered by the USPS. In addition, petitioner has failed to establish that the "date-in" was incorrectly entered or omitted by the USPS.

Accordingly, the petition is **dismissed**.

Petitioner has submitted a statement from the USPS which indicates a date of receipt by the Office of March 17, 2003. However, the USPS has *not* provided any statement indicating the date on which the application was mailed. The Office will not presume the application was mailed on Friday because Express Mail packages are not always delivered timely.

An Office employee charged $130 to petitioner's deposit account for the petition fee because the petition was labeled as a petition under 37 CFR 1.182. However, the petition was treated under 37 CFR 1.10 and therefore a fee is unnecessary. The fee of $130 will be credited back to petitioner's deposit account.

Any request for reconsideration must be submitted within TWO (2) MONTHS from the mail date of this decision. No further petition fee is required for the request. Extensions of time under 37 CFR 1.136(a) are NOT permitted. The reconsideration request should include a cover letter entitled "Renewed Petition under 37 CFR 1.10." This is **not** final agency action within the meaning of 5 U.S.C. § 704.

Further correspondence with respect to this matter should be addressed as follows:

By mail: Mail Stop Petition
Commissioner for Patents
P.O. Box 1450
Alexandria, VA 22313-1450

By facsimile: (703) 308-6916
Attn: Office of Petitions

By hand: Office of Petitions
2201 South Clark Place
Crystal Plaza 4, Suite 3C23
Arlington, VA 22202

The file is now being forwarded to Technology Center 2100 for examination in due course.

Telephone inquiries should be directed to Petitions Attorney Steven Brantley at (703) 306-5683.

Charles Steven Brantley
Petitions Attorney
Office of Petitions

UNITED STATES PATENT AND TRADEMARK OFFICE

Commissioner for Patents
United States Patent and Trademark Office
P.O. Box 1450
Alexandria, VA 22313-1450
www.uspto.gov

Paper No. 5

MORGAN & FINNEGAN, L.L.P.
345 Park Avenue
New York, NY 10154-0053

COPY MAILED

AUG 1 3 2004

OFFICE OF PETITIONS

ON PETITION

In re Application of :
Jung et al. :
Application No. 10/389,624 :
Filed: March 13, 2003 :
Attorney Docket No. 4208-4121 :

This is a decision in response to the renewed petition filed May 28, 2004, entitled in part, "Renewed Petition Under 37 CFR §§ 1.10(d) or 1.182." The petition is being treated as a petition under 37 CFR 1.10 to accord the above-identified application a filing date of March 14, 2003, instead of March 13, 2003.

The petition is **dismissed**.

Petitioner has failed to provide a showing in compliance with 37 CFR 1.10(c) or 1.10(d). 37 CFR 1.10(c) states,

> Any person filing correspondence under this section that was received by the Office and delivered by the "Express Mail Post Office to Addressee" service of the USPS, who can show that there is a discrepancy between the filing date accorded by the Office to the correspondence and the date of deposit as shown by the "date-in" on the "Express Mail" mailing label or other official USPS notation, may petition the Commissioner to accord the correspondence a filing date as of the "date-in" on the "Express Mail" mailing label or other official USPS notation, provided that:
>
> (1) The petition is filed promptly after the person becomes aware that the Office has accorded, or will accord, a filing date other than the USPS deposit date;
>
> (2) The number of the "Express Mail" mailing label was placed on the paper(s) or fee(s) that constitute the correspondence prior to the original mailing by "Express Mail;" and
>
> (3) The petition includes a true copy of the "Express Mail" mailing label showing the "date-in," and of any other official notation by the USPS relied upon to show the date of deposit.

Petitioner has not shown that relief under 37 CFR 1.10(c) is proper. Specifically, petitioner has failed to establish that the filing date assigned by the Office differs from the "date-in" listed on the "Express Mail." Petitioner has not shown that the "date-in," or other official USPS notation, on the label listed May 14, 2004, as the date of mailing.

37 CFR 1.10(d) states:

> Any person filing correspondence under this section that was received by the Office and delivered by the "Express Mail Post Office to Addressee" service of the USPS, who can show that the "date-in" on the "Express Mail" mailing label or other official notation entered by the USPS was incorrectly entered or omitted by the USPS, may petition the

entered by the USPS was incorrectly entered or omitted by the USPS, may petition the Commissioner to accord the correspondence a filing date as of the date the correspondence is shown to have been deposited with the USPS, provided that: . . .

(3) The petition includes a showing which establishes, to the satisfaction of the Commissioner, that the requested filing date was the date the correspondence was deposited in the "Express Mail Post Office to Addressee" service prior to the last scheduled pickup for that day. Any showing pursuant to this paragraph must be corroborated by evidence from the USPS or that came into being after deposit and within one business day of the deposit of the correspondence in the "Express Mail Post Office to Addressee" service of the USPS.

Petitioner has failed to establish that the "date-in" was incorrectly entered or omitted. However, since the Office uses the "date-in" as the filing date, the remainder of this decision will assume the date-in listed March 13, 2003 as the date of mailing. Petitioner has failed to meet requirement (3) listed above. The evidence from the USPS only indicates the date of receipt by the Office and not the date of mailing. The petition indicates the logs from the meter equipment were created prior to the mailing of the application and not within one business day *after* the mailing of the application. Therefore, petitioner's showing is not corroborated by evidence from the USPS or that came into being after deposit and within one business day of the deposit of the correspondence in the "Express Mail Post Office to Addressee" service of the USPS.

Since petitioner has failed to meet the requirements of 37 CFR 1.10, relief will not be granted.

Any request for reconsideration must be submitted within TWO (2) MONTHS from the mail date of this decision. No further petition fee is required for the request. Extensions of time under 37 CFR 1.136(a) are NOT permitted. The reconsideration request should include a cover letter entitled "Renewed Petition under 37 CFR 1.10." This is **not** final agency action within the meaning of 5 U.S.C. § 704.

Further correspondence with respect to this matter should be addressed as follows:

By mail: Mail Stop Petition
Commissioner for Patents
P.O. Box 1450
Alexandria, VA 22313-1450

By facsimile: (703) 308-6916
Attn: Office of Petitions

The file is now being forwarded to the Office of Publications to consider the Request to Rescind Previous Non-Publication Request filed on April 1, 2004.

Telephone inquiries should be directed to Petitions Attorney Steven Brantley at (703) 306-5683.

Charles Steven Brantley
Petitions Attorney
Office of Petitions

UNITED STATES PATENT AND TRADEMARK OFFICE

Commissioner for Patents
United States Patent and Trademark Office
P.O. Box 1450
Alexandria, VA 22313-1450
www.uspto.gov

MORGAN & FINNEGAN, L.L.P.
345 Park Avenue
New York, NY 10154-0053

COPY MAILED

DEC 0 9 2004

OFFICE OF PETITIONS

ON PETITION

In re Application of :
Jung et al. :
Application No. 10/389,624 :
Filed: March 13, 2003 :
Attorney Docket No. 4208-4121 :

This is a decision in response to the renewed petition filed October 6, 2004, entitled in part, "Renewed Petition Under 37 CFR §§ 1.10(d) or 1.182." The petition is being treated as a petition under 37 CFR 1.10 to accord the above-identified application a filing date of March 14, 2003, instead of March 13, 2003.

The petition is **granted**.

Petitioner has provided data from a USPS database verifying the application was deposited with the USPS at 9:58 pm on March 14, 2003.

Since petitioner has met the requirements of 37 CFR 1.10, relief will be granted.

The Office of Initial Patent Examination will be informed of the instant decision and will accord the application a filing date of March 14, 2003.

Telephone inquiries should be directed to Petitions Attorney Steven Brantley at (571) 272-3203.

Charles Steven Brantley
Petitions Attorney
Office of Petitions

UNITED STATES PATENT AND TRADEMARK OFFICE

Commissioner for Patents
United States Patent and Trademark Office
P.O. Box 1450
Alexandria, VA 22313-1450
www.uspto.gov

Paper No. 4

HOVEY WILLIAMS LLP
2405 GRAND BLVD., SUITE 400
KANSAS CITY MO 64108

COPY MAILED

AUG 2 7 2003

OFFICE OF PETITIONS

In re Application of	:	
David P. Tan and Vicki Sickler	:	
Application No. 10/389,635	:	DECISION GRANTING
Filed: March 14, 2003	:	PETITION
Attorney Docket No. 33216	:	
Title: REFLECTING LIGHTED LEVEL	:	

This is a decision on the "Petition under 37 C.F.R. §1.53(e) to establish prior receipt in the United States Patent and Trademark Office of items noted as omitted," filed June 2, 2003, which is properly treated as a petition under 37 CFR §1.1.53(b), requesting the application, including figure seven (7), be accorded a filing date of March 14, 2003 as part of the original disclosure.

The application was deposited on March 14, 2003. However, on May 21, 2003, Initial Patent Examination Division mailed a Notice to File Missing Parts of Nonprovisional Application - Filing Date Granted (notice) stating that figure seven (7) appeared to have been omitted on filing. The notice further indicated that an oath or declaration would be required, along with the associated surcharge.

In response, on June 2, 2003, applicants filed the present petition. The petition is further accompanied by a copy of figure seven (7), along with a copy of applicants' postcard receipt acknowledging receipt of eight (8) sheets of drawings in the United States Patent and Trademark Office (Office) on March

14, 2003. Applicants request that the application, including figure seven (7) be accorded a filing date of March 14, 2003.

Upon review of the record, seven (7) sheets drawings containing figures one through six and eight (1-6 and 8) has been located, but figure seven (7) has not been located among the application papers. However, the evidence is convincing that the application papers deposited on March 14, 2003 included figure seven (7), and the sheet of drawings containing this figure was subsequently misplaced in the Office.

Therefore, the application, including figure seven (7) was complete on filing and entitled to a filing date of March 14, 2003 as part of the original disclosure.

Accordingly, the petition is **GRANTED**.

The portion of the notice pertaining to the missing drawing mailed May 21, 2003 was sent in error. Therefore, no petition fee is necessary. The petition fee of $130 will be refunded to petitioner's Deposit Account.

The application file is being returned to the Office of Initial Patent Examination for further processing with a filing date of March 14, 2003, using the original application papers filed on that date, as well as figure seven (7) submitted on June 2, 2003.

Any inquiries related to this decision should be directed to Petitions Attorney Paul Shanoski at (703) 305-0011.

Beverly Flanagan
Supervisory Petitions Examiner
Office of Petitions
United States Patent and Trademark Office

UNITED STATES PATENT AND TRADEMARK OFFICE

COMMISSIONER FOR PATENTS
UNITED STATES PATENT AND TRADEMARK OFFICE
P.O. BOX 1450
ALEXANDRIA, VA 22313-1450
www.uspto.gov

JJGJR.: 08-04

Paper No: 8

Mark E. Ogram
Ste 203
7454 E. Broadway
Tucson AZ 85710

COPY MAILED
AUG 1 1 2004
OFFICE OF PETITIONS

In re Application of
Bryant :
Application No. 10/389,637 :
Filing Date: 14 March, 2003
Attorney Docket No. 9029B.1 :

This is a decision on the petition filed on 6 July, 2004, alleging, *inter alia*, unavoidable delay under 37 C.F.R. §1.137(a).

For the reasons set forth below, the petition as considered under 37 C.F.R.§1.137(a) is **DISMISSED**.

NOTES:

(1) Any petition (and fee) for reconsideration of this decision under 37 C.F.R. §1.137(a) (as to unavoidable delay) or an alternative request for relief under 37 C.F.R. §1.137(b)[1] (as to unintentional delay) must be submitted within two (2)

[1] Effective December 1, 1997, the provisions of 37 C.F.R. §1.137(b) now provide that where the delay in reply was unintentional, a petition may be filed to revive an abandoned application or a lapsed patent pursuant to 37 C.F.R. §1.137(b). a grantable petition filed under the provisions of 37 C.F.R. §1.137(b) must be accompanied by:
(1) the required reply, unless previously filed. In a nonprovisional application abandoned for failure to prosecute, the required reply may be met by the filing of a continuing application. In an application or patent, abandoned or lapsed for failure to pay the issue fee or any portion thereof, the required reply must be the payment of the issue fee or any outstanding balance thereof.
(2) the petition fee as set forth in 37 C.F.R. §1.17(m);
(3) a statement that the entire delay in filing the required reply from the due date for the reply until the filing of a grantable petition pursuant to

months from the mail date of this decision. Extensions of time under 37 C.F.R. §1.136(a) are permitted. The reconsideration request should include a cover letter entitled "Renewed Petition under 37 C.F.R. §1.137(a)"; and/or "Petition under 37 C.F.R. §1.181";

(2) Thereafter, there will be no further reconsideration of this matter.

BACKGROUND

The record reflects that:

- Petitioner failed to reply timely and properly to the revised Notice to File Corrected Application Papers (Filing Date Granted) mailed on 15 August, 2003, with reply due absent extension of time on or before 15 October, 2003;
- the Office mailed a Notice of Abandonment on 21 June, 2004;
- Petitioner has failed to file a reply to the Office action of 15 August, 2003 (copy enclosed.

STATUTES, REGULATIONS AND ANALYSIS

Congress has authorized the Commissioner to "revive an application if the delay is shown to the satisfaction of the Commissioner to have been "unavoidable." 35 U.S.C. §133 (1994).[2]

The regulations at 37 C.F.R. §1.137(a) and (b) set forth the requirements for a petitioner to revive a previously unavoidably or unintentionally, respectively, abandoned application under this congressional grant of authority. The language of 35 U.S.C. §133 and 37 C.F.R. §1.137(a) is clear, unambiguous, and without qualification: the delay in tendering the reply to the outstanding Office action, as well as filing the first petition seeking revival, must have been unavoidable for the reply now to be accepted on petition.[3]

---

37 C.F.R. §1.137(b) was unintentional. The Commissioner may require additional information where there is a question whether the delay was unintentional; and

(4) any terminal disclaimer (and fee set forth in 37 C.F.R. §1.20(d)) required pursuant to 37 C.F.R. §1.137(c). (Emphasis supplied.)

[2] 35 U.S.C. §133 provides:

35 U.S.C. §133 Time for prosecuting application.

Upon failure of the applicant to prosecute the application within six months after any action therein, of which notice has been given or mailed to the applicant, or within such shorter time, not less than thirty days, as fixed by the Commissioner in such action, the application shall be regarded as abandoned by the parties thereto, unless it be shown to the satisfaction of the Commissioner that such delay was unavoidable.

[3] Therefore, by example, an unavoidable delay in the payment of the Filing Fee might occur if a reply is shipped by the US Postal Service, but due to catastrophic accident, the delivery is not made.

Delays in responding properly raise the question whether delays are unavoidable.[4] Where there is a question whether the delay was unavoidable, Petitioners must meet the burden of establishing that the delay was unavoidable within the meaning of 35 U.S.C. §133 and 37 C.F.R. §1.137(a).[5] And the Petitioner must be diligent in attending to the matter.[6] Failure to do so does not constitute the care required under Pratt, and so cannot satisfy the test for diligence and due care.

(By contrast, unintentional delays are those that do not satisfy the very strict statutory and regulatory requirements of unavoidable delay, and also, by definition, are not intentional.[7]))

The requirements for a grantable petition under 37 C.F.R. §1.137(a) are the petition and fee, a showing of unavoidable delay, a proper reply, and–where appropriate--a terminal disclaimer and fee if the application was filed before 8 June, 1995.

Petitioner has filed the petition and fee requirements, but has made no showing of unavoidable delay and has failed to file a reply to the outstanding Office action.

A copy of the 4 June, 2003, Office action, to which Petitioner must reply, is enclosed.

CONCLUSION

In the absence of the proper reply, the instant petition under 37 C.F.R. §1.137(a) hereby is **dismissed**.

ALTERNATIVE VENUE

Petitioner suggests that he did not receive the 15 August, 2003, Office action.

Petitioner may wish to file a Request to Withdraw the Holding of Abandonment under the provisions of 37 C.F.R. §1.181.

---

[4] See: *Changes to Patent Practice and Procedure; Final Rule Notice*, 62 *Fed. Reg.* at 53158-59 (October 10, 1997), 1203 *Off. Gaz. Pat. Office* at 86-87 (October 21, 1997).

[5] See: In re Application of G, 11 USPQ2d 1378, 1380 (Comm'r Pats. 1989).

[6] See: Diligence in Filing Petitions to Revive and Petitions to Withdraw the Holding of Abandonment, 1124 Off. Gaz. Pat. Office 33 (March 19, 1991). It was and is Petitioner's burden to exercise diligence in seeking either to have the holding of abandonment withdrawn or the application revived. See 1124 Off. Gaz. Pat. Office supra.

[7] Therefore, by example, an unintentional delay in the reply might occur if the reply and transmittal form are to be prepared for shipment by the US Postal Service, but other pressing matters distract one's attention and the mail is not timely deposited for shipment.

Further correspondence with respect to this matter should be addressed as follows:

By mail: (Effective 1 May, 2003)[8]
Commissioner for Patents
P.O. Box 1450
Alexandria, VA 22313-1450

By FAX: IFW Formal Filings
(703) 872-9306
(Effective 28 September, 2004: (571-273-0025)
ATTN.: Office of Petitions

By hand: Mail Stop: Petition
Customer Service Window
Lobby/Room 1B03
Crystal Plaza Two
220 20th Street S.
Arlington, VA 22202

Telephone inquiries concerning this decision may be directed to the undersigned at (703) 305-9199.

John J. Gillon, Jr.
Senior Attorney
Office of Petitions

[8] To determine the appropriate addresses for other subject-specific correspondence, refer to the USPTO Web site at www.uspto.gov.

UNITED STATES PATENT AND TRADEMARK OFFICE

COMMISSIONER FOR PATENTS
UNITED STATES PATENT AND TRADEMARK OFFICE
P.O. BOX 1450
ALEXANDRIA, VA 22313-1450
www.uspto.gov

JJGJR.: 11-04

Paper No: 11

MARK E. OGRAM
STE 203
7454 E. BROADWAY
TUCSON AZ 85710

COPY MAILED

NOV 10 2004

OFFICE OF PETITIONS

In re Application of
Bryant :
Application No. 10/389,637 :
Filing Date: 14 March, 2003
Attorney Docket No. 9029B.1 :

This is a decision on the petition filed on 30 August, 2004, alleging, *inter alia*, unavoidable delay under 37 C.F.R. §1.137(a).

For the reasons set forth below, the petition as considered under 37 C.F.R.§1.137(a) is **DISMISSED**.

NOTES:

(1) Any petition (and fee) for reconsideration of this decision under 37 C.F.R. §1.137(a) (as to unavoidable delay) or an alternative request for relief under 37 C.F.R. §1.137(b)[1] (as to unintentional delay) must be submitted within two (2)

[1] Effective December 1, 1997, the provisions of 37 C.F.R. §1.137(b) now provide that where the delay in reply was unintentional, a petition may be filed to revive an abandoned application or a lapsed patent pursuant to 37 C.F.R. §1.137(b). a grantable petition filed under the provisions of 37 C.F.R. §1.137(b) must be accompanied by:
(1) the required reply, unless previously filed. In a nonprovisional application abandoned for failure to prosecute, the required reply may be met by the filing of a continuing application. In an application or patent, abandoned or lapsed for failure to pay the issue fee or any portion thereof, the required reply must be the payment of the issue fee or any outstanding balance thereof.
(2) the petition fee as set forth in 37 C.F.R. §1.17(m);
(3) a statement that the entire delay in filing the required reply from the due date for the reply until the filing of a grantable petition pursuant to

months from the mail date of this decision. Extensions of time under 37 C.F.R. §1.136(a) are permitted. The reconsideration request should include a cover letter entitled "Renewed Petition under 37 C.F.R. §1.137(a)"; and/or "Petition under 37 C.F.R. §1.137(b)";

(2) Thereafter, there will be no further reconsideration of this matter.

PLEASE TAKE SPECIAL NOTE:

Petitioner continues to ignore the Notice to File Corrected Application Papers mailed 18 August, 2003 (the August 2003 Notice)--a copy of which was mailed with the decision of 11 August, 2004--with particular attention to Fig. 3B (e.g., see items 84 and 83B therein). The August 2003 Notice directed Petitioner to the requirement that "[t]he drawings must be reasonably free from erasures and must be free from alterations, overwriting, interlineations, folds, and copy marks. See Figure(s) 3B."

Petitioner must reply to this Office action in satisfaction of the requirements of under 37 C.F.R. §1.137.

Failing this proper reply, Petitioner's application cannot be revived.

BACKGROUND

The record reflects that:

- Petitioner failed to reply timely and properly to the revised Notice to File Corrected Application Papers (Filing Date Granted) mailed on 15 August, 2003, with reply due absent extension of time on or before 15 October, 2003;
- the Office mailed a Notice of Abandonment on 21 June, 2004;
- Because, inter alia, Petitioner failed to reply to that requirement on submission of a petition on 6 July, 2004, the petition was dismissed on 11 August, 2004;
- with the petition filed on 30 August, 2004, Petitioner again has failed to file a reply to the Office action of 15 August, 2003 (a second copy enclosed), with particular attention to

---

37 C.F.R. §1.137(b) was unintentional. The Commissioner may require additional information where there is a question whether the delay was unintentional; and
(4) any terminal disclaimer (and fee set forth in 37 C.F.R. §1.20(d)) required pursuant to 37 C.F.R. §1.137(c). (Emphasis supplied.)

Fig. 3B (e.g., see items 84 and 83B therein).

STATUTES, REGULATIONS AND ANALYSIS

Congress has authorized the Commissioner to "revive an application if the delay is shown to the satisfaction of the Commissioner to have been "unavoidable." 35 U.S.C. §133 (1994).[2]

The regulations at 37 C.F.R. §1.137(a) and (b) set forth the requirements for a petitioner to revive a previously unavoidably or unintentionally, respectively, abandoned application under this congressional grant of authority. The language of 35 U.S.C. §133 and 37 C.F.R. §1.137(a) is clear, unambiguous, and without qualification: the delay in tendering the reply to the outstanding Office action, as well as filing the first petition seeking revival, must have been unavoidable for the reply now to be accepted on petition.[3]

Delays in responding properly raise the question whether delays are unavoidable.[4] Where there is a question whether the delay was unavoidable, Petitioners must meet the burden of establishing that the delay was unavoidable within the meaning of 35 U.S.C. §133 and 37 C.F.R. §1.137(a).[5] And the Petitioner must be diligent in attending to the matter.[6] Failure to do so does not constitute the care required under Pratt, and so cannot satisfy the test for diligence and due care.

(By contrast, unintentional delays are those that do not satisfy the very strict statutory and regulatory requirements of unavoidable delay, and also, by definition, are not intentional.[7]))

The requirements for a grantable petition under 37 C.F.R. §1.137(a) are the petition and fee, a showing of unavoidable delay, a proper reply, and–where appropriate--a terminal disclaimer and

---

[2] 35 U.S.C. §133 provides:
35 U.S.C. §133 Time for prosecuting application.
Upon failure of the applicant to prosecute the application within six months after any action therein, of which notice has been given or mailed to the applicant, or within such shorter time, not less than thirty days, as fixed by the Commissioner in such action, the application shall be regarded as abandoned by the parties thereto, unless it be shown to the satisfaction of the Commissioner that such delay was unavoidable.

[3] Therefore, by example, an unavoidable delay in the payment of the Filing Fee might occur if a reply is shipped by the US Postal Service, but due to catastrophic accident, the delivery is not made.

[4] See: *Changes to Patent Practice and Procedure; Final Rule Notice*, 62 *Fed. Reg.* at 53158-59 (October 10, 1997), 1203 *Off. Gaz. Pat. Office* at 86-87 (October 21, 1997).

[5] See: In re Application of G, 11 USPQ2d 1378, 1380 (Comm'r Pats. 1989).

[6] See: Diligence in Filing Petitions to Revive and Petitions to Withdraw the Holding of Abandonment, 1124 Off. Gaz. Pat. Office 33 (March 19, 1991). It was and is Petitioner's burden to exercise diligence in seeking either to have the holding of abandonment withdrawn or the application revived. See 1124 Off. Gaz. Pat. Office supra.

[7] Therefore, by example, an unintentional delay in the reply might occur if the reply and transmittal form are to be prepared for shipment by the US Postal Service, but other pressing matters distract one's attention and the mail is not timely deposited for shipment.

fee if the application was filed before 8 June, 1995.

Petitioner has yet to satisfy the "reply" requirement, with particular attention to Fig. 3B (e.g., see items 84 and 83B therein). Another copy of the 4 June, 2003, Office action, to which Petitioner must reply, is enclosed.

A telephone call was placed to and a message was left with Petitioner's office on 10 November, 2004, to address this matter further.

CONCLUSION

In the absence of the proper reply, the instant petition under 37 C.F.R. §1.137(a) hereby is **dismissed**.

ALTERNATIVE VENUE

Petitioner suggests that he did not receive the 15 August, 2003, Office action.

Petitioner may wish to file a Request to Withdraw the Holding of Abandonment under the provisions of 37 C.F.R. §1.181.

Further correspondence with respect to this matter should be addressed as follows:

By mail: (Effective 1 May, 2003)[8]
Commissioner for Patents
P.O. Box 1450
Alexandria, VA 22313-1450

By FAX: IFW Formal Filings
(703) 872-9306
(Effective 28 September, 2004: (571-273-0025)
ATTN.: Office of Petitions

[8] To determine the appropriate addresses for other subject-specific correspondence, refer to the USPTO Web site at www.uspto.gov.

By hand: Mail Stop: Petition
Customer Service Window
Lobby/Room 1B03
Crystal Plaza Two
220 20th Street S.
Arlington, VA 22202

Telephone inquiries concerning this decision may be directed to the undersigned at (703) 305-9199.

John J. Gillon, Jr.
Senior Attorney
Office of Petitions

Encl: Notice to File Corrected Application Papers mailed 18 August, 2003 (the August 2003 Notice)

UNITED STATES PATENT AND TRADEMARK OFFICE

COMMISSIONER FOR PATENTS
UNITED STATES PATENT AND TRADEMARK OFFICE
P.O. BOX 1450
ALEXANDRIA, VA 22313-1450
www.uspto.gov

JJGJR.: 11-04

Paper No: 11

COPY MAILED

DEC 10 2004

OFFICE OF PETITIONS

MARK E. OGRAM
STE 203
7454 E. BROADWAY
TUCSON AZ 85710

In re Application of
Bryant :
Application No. 10/389,637 :
Filing Date: 14 March, 2003
Attorney Docket No. 9029B.1 :

This is a decision on the petition filed on 30 August, 2004, alleging, *inter alia*, unavoidable delay under 37 C.F.R. §1.137(a).

For the reasons set forth below, the petition as considered under 37 C.F.R.§1.137(a) is **GRANTED**.

BACKGROUND

The record reflects that:

- Petitioner failed to reply timely and properly to the revised Notice to File Corrected Application Papers (Filing Date Granted) mailed on 15 August, 2003, with reply due absent extension of time on or before 15 October, 2003;

- the Office mailed a Notice of Abandonment on 21 June, 2004;

- Because Petitioner failed, *inter alia*, to reply to that requirement on submission of a petition on 6 July, 2004, the petition was dismissed on 11 August, 2004;

- with the petition filed on 30 August, 2004, Petitioner failed to file a reply to the Office action of 15 August, 2003 (a second copy enclosed), with particular attention to Fig. 3B (e.g., see items 84 and 83B therein), and therefore the petition was dismissed on 10 November, 2004;

- Petitioner submitted a new drawing on 15 November, 2004, and therefore, as of this writing, has satisfied the reply requirement.

STATUTES, REGULATIONS AND ANALYSIS

Congress has authorized the Commissioner to "revive an application if the delay is shown to the satisfaction of the Commissioner to have been "unavoidable." 35 U.S.C. §133 (1994).[1]

The regulations at 37 C.F.R. §1.137(a) and (b) set forth the requirements for a petitioner to revive a previously unavoidably or unintentionally, respectively, abandoned application under this congressional grant of authority. The language of 35 U.S.C. §133 and 37 C.F.R. §1.137(a) is clear, unambiguous, and without qualification: the delay in tendering the reply to the outstanding Office action, as well as filing the first petition seeking revival, must have been unavoidable for the reply now to be accepted on petition.[2]

Delays in responding properly raise the question whether delays are unavoidable.[3] Where there is a question whether the delay was unavoidable, Petitioners must meet the burden of establishing that the delay was unavoidable within the meaning of 35 U.S.C. §133 and 37 C.F.R. §1.137(a).[4] And the Petitioner must be diligent in attending to the matter.[5] Failure to do so does not constitute the care required under Pratt, and so cannot satisfy the test for diligence and due care.

---

[1] 35 U.S.C. §133 provides:
35 U.S.C. §133 Time for prosecuting application.
Upon failure of the applicant to prosecute the application within six months after any action therein, of which notice has been given or mailed to the applicant, or within such shorter time, not less than thirty days, as fixed by the Commissioner in such action, the application shall be regarded as abandoned by the parties thereto, unless it be shown to the satisfaction of the Commissioner that such delay was unavoidable.

[2] Therefore, by example, an unavoidable delay in the payment of the Filing Fee might occur if a reply is shipped by the US Postal Service, but due to catastrophic accident, the delivery is not made.

[3] See: *Changes to Patent Practice and Procedure; Final Rule Notice*, 62 *Fed. Reg.* at 53158-59 (October 10, 1997), 1203 *Off. Gaz. Pat. Office* at 86-87 (October 21, 1997).

[4] See: In re Application of G, 11 USPQ2d 1378, 1380 (Comm'r Pats. 1989).

[5] See: Diligence in Filing Petitions to Revive and Petitions to Withdraw the Holding of Abandonment, 1124 Off. Gaz. Pat. Office 33 (March 19, 1991). It was and is Petitioner's burden to exercise diligence in seeking either to have the holding of abandonment withdrawn or the application revived. See 1124 Off. Gaz. Pat. Office supra.

(By contrast, unintentional delays are those that do not satisfy the very strict statutory and regulatory requirements of unavoidable delay, and also, by definition, are not intentional.[6]))

The requirements for a grantable petition under 37 C.F.R. §1.137(a) are the petition and fee, a showing of unavoidable delay, a proper reply, and–where appropriate--a terminal disclaimer and fee if the application was filed before 8 June, 1995.

Petitioner now has satisfied the petition, fee, showing and reply requirements of the regulation (a terminal disclaimer is not required).

CONCLUSION

The instant petition under 37 C.F.R. §1.137(a) hereby is **granted**.

The instant application is forwarded to OIPE for further processing before being forwarded for examination in due course.

Telephone inquiries concerning this decision may be directed to the undersigned at (703) 305-9199.

John J. Gillon, Jr.
Senior Attorney
Office of Petitions

[6] Therefore, by example, an unintentional delay in the reply might occur if the reply and transmittal form are to be prepared for shipment by the US Postal Service, but other pressing matters distract one's attention and the mail is not timely deposited for shipment.

RECEIVED
MAR 30 1998
SPRINT
LAW DEPT.

UNITED STATES DEPARTMENT OF COMMERCE
Patent and Trademark Office
ASSISTANT SECRETARY AND COMMISSIONER
OF PATENTS AND TRADEMARKS
Washington, D.C. 20231

1123

Harley R. Ball
Sprint Law Department
8140 Ward Parkway
Mailstop: MOKCMP0506
Kansas City MO 64114

COPY MAILED

MAR 24 1998

OFFICE OF PETITIONS
A/C PATENTS

In re Application of Duree, Gardner, Wiley, Nelson, and Christie (deceased) Application No. 08/755,523 Filed: November 22, 1996 For: Broadband Telecommunications System	DECISION ACCORDING STATUS UNDER 37 CFR 1.47(a) AND REQUIREMENT FOR SUPPLEMENTAL DECLARATION

This is in response to the "Petition Under 37 CFR 1.47(a) and 1.42," filed March 3, 1997.

The petition is granted.

On November 22, 1996, a Declaration and Power of Attorney signed by inventors Gardner, DuRee, and Wiley was filed. Joint inventor Christie was indicated as deceased and his legal representatives were not identified.

On January 29, 1997, Initial Patent Examination Division sent a "Notice to File Missing Parts of Application" requiring an oath or declaration signed by the executor of the deceased inventor and a surcharge.

In response, on March 3, 1997, applicant filed the instant petition. The petition included a "Declaration on Behalf of Deceased Inventor" signed by joint inventors DuRee, Gardner, Wiley, and Nelson, proof of authority of Joseph S. Christie and Jean M. Christie in compliance with 37 CFR 1.44 (Exhibit A) and proof of refusal of the legal representatives (the declaration of facts of Jay B. Beatty and the Express Refusal, Exhibit D). Furthermore, the petition set forth the last known address of the legal representatives and included the petition fee.

The above-identified application and papers have been reviewed and found in compliance with 37 CFR 1.47(a). This application is hereby accorded Rule 1.47(a) status and the Office of Initial Patent Examination is authorized to:

(1) accept this application under Rule 1.47(a);

(2) process the application with the inventors being Joseph M. Christie, deceased, Michael J. Gardner, Albert DuRee, and William Wiley, and with Joseph S. and Jean M. Christie as legal representatives of the deceased inventor, using the Declarations filed on November 22, 1996 and March 3, 1997; and

(3) mail a filing receipt with a filing date of November 22, 1996.

As provided in Rule 1.47(a), this Office will forward notice of this application's filing to non-signing legal representatives, Joseph S. Christie and Jean M. Christie, at the address given in the petition. Notice of the filing of this application will also be published in the Official Gazette.

However, the declaration signed by the joint inventors is not in compliance with 37 CFR 1.63 and 1.64 since the proper party to file the application on behalf of the deceased inventor was his legal representative. 35 U.S.C. § 117. Since the statute permits the legal representative to file on behalf of the deceased inventor and since the legal representative has refused to join the application, the joint inventors should sign the declaration for patent application on behalf of the legal representatives, setting forth the citizenship, residence and post office address of the legal representatives. See Manual of Patent Examining Procedure, Section 409.03(c). Petitioner may wish to modify the "Declaration on Behalf of Deceased Inventor" to read "Declaration of Behalf of Legal Representative of Deceased Inventor" to state: "Inventor (1) Joseph Michael Christie (deceased), late a citizen of the United States and resident of _____, Legal Representatives, Joseph S. Christie and Jean Mr. Christie, both citizens of the United States and residents of Mt. Pleasant, PA, having a post office address of R.D. #1, Box 435, Mt. Pleasant PA 15666." The supplemental declaration should identify the application number or serial number and filing date of the application. A supplemental oath or declaration in compliance with 37 CFR 1.63 and 1.64, as set forth above, is **REQUIRED** before issuance of the application as a patent or any earlier time required by the examiner.

It is noted that the "Power of Attorney by Assignee," filed March 3, 1997, does not comply with 37 CFR 3.73 and is therefore not acceptable.

After mailing of this decision, the application will be returned to the Office of Initial Patent Examination for issuance of further processing.

Telephone inquiries regarding this decision should be directed to the undersigned at (703) 306-3159.

Karin Tyson
Senior Legal Advisor
Special Program Law Office
Office of the Deputy Assistant Commissioner
for Patent Policy and Projects

10389638 .031403

UNITED STATES DEPARTMENT OF COMMERCE
Patent and Trademark Office
ASSISTANT SECRETARY AND COMMISSIONER
OF PATENTS AND TRADEMARKS
Washington, D.C. 20231

Joseph S. Christie
Jean M. Christie
R.D. 1, Box 435
Mt. Pleasant, PA 15666

COPY MAILED

MAR 2 4 1998

OFFICE OF PETITIONS
A/C PATENTS

In re Application of
Duree, Gardner, Wiley, Nelson,
and Christie (deceased)
Application No. 08/755,523
Filed: November 22, 1996
For: Broadband
Telecommunications System

Dear Mr. Joseph S. Christie and Ms. Jean M. Christie:

You are named as legal representatives of a deceased joint inventor in the above identified United States patent application, filed under the provisions of 35 U.S.C. 116 (United States Code), and 37 CFR 1.47(a), Rules of Practice in Patent Cases. Should a patent be granted on the application you should be designated therein as the legal representatives of joint inventor Christie.

As legal representatives you are entitled to inspect any paper in the file wrapper of the application, order copies of all or any part thereof (at a prepaid cost per 37 CFR 1.19) or make your position of record in the application. Alternatively, you may arrange to do any of the preceding through a registered patent attorney or agent presenting written authorization from you. If you care to join the application, counsel of record (see below) would presumably assist you. Joining in the application would entail the filing of an appropriate oath or declaration by you pursuant to 37 CFR 1.63 and would assist in ensuring that you are properly indicated on the face of any patent as the legal representative of the deceased inventor.

Telephone inquiries regarding this communication should be directed to the undersigned at (703)305-9285.

Karin Tyson
Legal Advisor/Special Program Law Office
Office of the Deputy Assistant Commissioner
for Patent Policy and Projects

Harley R. Ball
Sprint Law Department
8140 Ward Parkway
Mailstop: MOKCMP0506
Kansas City MO 64114

UNITED STATES PATENT AND TRADEMARK OFFICE

Commissioner for Patents
United States Patent and Trademark Office
P.O. Box 1450
Alexandria, VA 22313-1450
www.uspto.gov

SEP 22 2004

DANN, DORFMAN, HERRELL & SKILLMAN
1601 MARKET STREET
SUITE 2400
PHILADELPHIA PA 19103-2307

In re Application of	:
Tauseef Butt et al	:
Serial No.: 10/389,640	: PETITION TO MAKE SPECIAL
Filed: March 14, 2004	:
Attorney Docket No.: 1955PO2592US2	:

This is in response to applicants= petition filed August 12, 2004, to make the above-identified application special under the provisions of 37 CFR 1.102(d).

Applicant has satisfied the provisions set forth in M.P.E.P. 708.02, XII. Therefor the petition is **GRANTED**.

Should there be any questions with regard to this letter please contact William R. Dixon, Jr. by letter addressed to the Director, Technology Center 1600, P.O. Box 1450, Alexandria, VA 22313-1450, or by telephone at 571-272-0519 or by facsimile transmission at 703-872-9306.

William R. Dixon, Jr.
Special Program Examiner
Technology Center 1600

UNITED STATES PATENT AND TRADEMARK OFFICE

UNITED STATES DEPARTMENT OF COMMERCE
United States Patent and Trademark Office
Address: COMMISSIONER FOR PATENTS
P.O. Box 1450
Alexandria, Virginia 22313-1450
www.uspto.gov

APPLICATION NO.	FILING DATE	FIRST NAMED INVENTOR	ATTORNEY DOCKET NO.	CONFIRMATION NO.
10/389,645	03/14/2003	Stefan Sitzmann	F-7719	1014

28107 7590 03/16/2005
JORDAN AND HAMBURG LLP
122 EAST 42ND STREET
SUITE 4000
NEW YORK, NY 10168

EXAMINER
SELLS, JAMES D

ART UNIT	PAPER NUMBER
1734	

DATE MAILED: 03/16/2005

Please find below and/or attached an Office communication concerning this application or proceeding.

UNITED STATES PATENT AND TRADEMARK OFFICE

COMMISSIONER FOR PATENTS
UNITED STATES PATENT AND TRADEMARK OFFICE
P.O. BOX 1450
ALEXANDRIA, VA 22313-1450
www.uspto.gov

MAR 15 2005

In re Application of	:	
SITZMANN, STEFAN	:	NOTICE OF WITHDRAWAL
Serial No.10/389645	:	FROM ISSUE
Filed: March 14, 2003	:	UNDER 37 CFR 1.313(b)
For: PROCESS FOR BONDING SEVERAL	:	
LAYERS OF PLASTIC FILM	:	

The above-identified application is withdrawn from issue after payment of the issue fee due to reopening of prosecution. See 37 CFR 1.313 (b).

The above-identified application is hereby withdrawn from issue.

The issue fee is refundable upon written request. If, however, the application is again found allowable, the issue fee can be applied toward payment of the issue fee in the amount identified on the new Notice of Allowance and Issue Fee Due upon written request. This request and any balance due must be received on or before the due date noted in the new Notice of Allowance in order to prevent abandonment of the application.

Telephone inquiries should be directed to Christopher Fiorilla (571) 272-1187.

The above-identified application is being forwarded to the examiner for prompt appropriate action, including notifying applicant of the new status of this application.

Jacqueline Stone, Director
Technology Center 1700
Chemical and Materials Engineering

JORDAN AND HAMBURG LLP
122 EAST 42ND STREET
SUITE 4000
NEW YORK NY 10168

cc: Allowed Files—Pk3-910

SPE: J. Kramer

SPE RESPONSE FOR CERTIFICATE OF CORRECTION

Paper No.: _____

DATE : 2/28/07

TO SPE OF : ART UNIT 3693

SUBJECT : Request for Certificate of Correction for Appl. No.: 10/389,667 Patent No.: 7143061

Please respond to this request for a certificate of correction within 7 days.

Please review the requested changes/corrections as shown in the **COCIN** document(s) in the IFW application image. No new matter should be introduced, nor should the scope or meaning of the claims be changed.

Please complete the response (see below) and forward the completed response to scanning using document code **COCX**.

Lamonte M. Newsome
Certificates of Correction Branch
703-308-9390 ext. 112

Thank You For Your Assistance

The request for issuing the above-identified correction(s) is hereby:
Note your decision on the appropriate box.

- ☑ **Approved** — All changes apply.
- ☐ **Approved in Part** — Specify below which changes **do not** apply.
- ☐ **Denied** — State the reasons for denial below.

Comments: No new matter is added and the scope or meaning of the claims ~~are~~ is not changed by the corrections requested Ex. J. Patel

[signature]
SPE

3693
Art Unit

PTO/SB/44 (10-96)
Approved for use through 6/30/99. OMB 0651-0033
Patent and Trademark Office; U.S. DEPARTMENT OF COMMERCE
Under the Paperwork Reduction Act of 1995, no persons are required to respond to a collection of information unless it displays a valid OMB control number.

(Also Form PTO-1050)

UNITED STATES PATENT AND TRADEMARK OFFICE

CERTIFICATE OF CORRECTION

PATENT NO : 7,143,061

DATED : November 28, 2006

INVENTOR(S) : TREYNOR, Jack

It is certified that error appears in the above-identified patent and that said Letters Patent are hereby corrected as shown below:

1. Figure 5, Sheet 5, which also appears on the front page of the patent, in the bottom box, where it says "APPROPRIATELT" should be replaced with --APPROPRIATELY--
2. Column 8, Equation #4, the portion of the formula that reads "log x/a=~" should read --log x/a ≈--
3. Column 8, equation #5, the portion of the formula that reads "log (x/a)=~2" should read --log (x/a) ≈2--
4. Column 14, line 3, "34" should be --32--
5. Column 14, line 48: "reset" should be --result--
6. Column 14, line 53: "mutual" should be --not--
7. Column 16, line 36: "only" should be --why--

MAILING ADDRESS OF SENDER:
Pearl Cohen Zedek Latzer LLP.
10 Rockefeller Plaza
Suite 1001
New York, New York 10020

PATENT NO. 7,143,061
No. of additional copies
- 0

Burden Hour Statement: This form is estimated to take 1.0 hour to complete. Time will vary depending upon the needs of the individual case. Any comments on the amount of time you are required to complete this form should be sent to the Chief Information Officer, Patent and Trademark Office, Washington, DC 20231. DO NOT SEND FEES OR COMPLETED FORMS TO THIS ADDRESS. SEND TO: Assistant Commissioner for Patents, Washington, DC 20231.

JAN 30 2007

Attorney Docket No.: P-8607-US

IN THE UNITED STATES PATENT AND TRADEMARK OFFICE

RECEIVED
CENTRAL FAX CENTER
JAN 23 2007

APPLICANT(S): TREYNOR, Jack

PATENT NO: 7,143,061 EXAMINER: PATEL, JAGDISH

ISSUE DATE: November 28, 2006 GROUP ART UNIT: 3624

FOR: METHOD FOR MAINTAINING AN ABSOLUTE RISK LEVEL FOR AN INVESTMENT PORTFOLIO

Commissioner for Patents
P. O. Box 1450
Alexandria, VA 22313-1450

REQUEST FOR CERTIFICATE OF CORRECTION

Sir:

When reviewing the Letters Patent, it the following typographical errors were noted:

1. Figure 5, Sheet 5, which also appears on the front page of the patent, in the bottom box, where it says "APPROPRIATELT" should be replaced with --APPROPRIATELY--
2. Column 8, Equation #4, the portion of the formula that reads "log x/a=~" should read --log x/a ≈ --
3. Column 8, equation #5, the portion of the formula that reads "log (x/a)=~2" should read --log (x/a) ≈2--
4. Column 14, line 3, "34" should be --32--
5. Column 14, line 48: "reset" should be --result--
6. Column 14, line 53: "mutual" should be --not--
7. Column 16, line 36: "only" should be --why--

Issuance of a Certificate of Correction, is respectfully requested.

The correction or the error is not due to an error by Applicant(s) and no fee is due.

If any additional fee is required, the undersigned hereby authorizes the Patent Office to charge such additional fee to Deposit Account 50-3355.

Respectfully submitted,

Robert D. Schaffer
Attorney/Agent for Applicant(s)
Registration No. 33,775

Dated: 23 January 2007

Pearl Cohen Zedek Latzer, LLP
1500 Broadway, 12th Floor
New York, New York 10036
Tel: (646) 878-0800
Fax: (646) 878-0801

JAN 30 2007

UNITED STATES PATENT AND TRADEMARK OFFICE

Commissioner for Patents
United States Patent and Trademark Office
P.O. Box 1450
Alexandria, VA 22313-1450
www.uspto.gov

COPY MAILED
JUL 28 2006
OFFICE OF PETITIONS

WESTMAN CHAMPLIN (MICROSOFT CORPORATION)
SUITE 1400
900 SECOND AVENUE SOUTH
MINNEAPOLIS MN 55402-3319

In re Application of
Patrick E. Plaisted et al :
Application No. 10/389,684 : ON PETITION
Filed: March 12, 2003 :
Attorney Docket No. M61.12-0493 :
:

This is a decision on the petition filed July 24, 2006, requesting withdrawal of the above-identified application from issue after payment of the issue fee.

The petition is **DISMISSED as moot**.

Unfortunately, the petition did not reach the appropriate official for decision within sufficient time to avert issuance of the application into a patent. Petitioner's attention is directed to 37 CFR 1.313(d), which states:

> A petition under this section will not be effective to withdraw the application from issue unless it is actually received and granted by the appropriate officials **before the date of issue**. Withdrawal of an application from issue after payment of the issue fee may not be effective to avoid publication of application information.

Telephone inquiries should be directed to the undersigned at (571) 272-3208.

Karen Creasy

Karen Creasy
Petitions Examiner
Office of Petitions

UNITED STATES PATENT AND TRADEMARK OFFICE

COMMISSIONER FOR PATENTS
UNITED STATES PATENT AND TRADEMARK OFFICE
P.O. BOX 1450
ALEXANDRIA, VA 22313-1450
www.uspto.gov

BRAD PEDERSEN
PATTERSON THUENTE SKAAR & CHRISTENSEN P.A.
4800 IDS CENTER
80 SOUTH 8TH STREET
MINNEAPOLIS, MN 55402-2100

COPY MAILED

FEB 19 2004

OFFICE OF PETITIONS

In re Application of
Daniel G. Ericson et al
Application No. 10/389,696
Filed: March 14, 2003
For: COATED SURFACES FOR IMMOBILIZING NEGATIVELY CHARGED ANTICOAGULATING AGENTS FROM BLOOD FLUID

: DECISION GRANTING
:STATUS UNDER 37 CFR 1.47(a)

This is in response to the petition under 37 CFR 1.47(a), filed October 14, 2003 (PTO Post Card Receipt August 14, 2003).

The petition is granted.

Petitioner has shown that the non-signing inventor has refused to join in the filing of the above-identified application.

The above-identified application and papers have been reviewed and found in compliance with 37 CFR 1.47(a). This application is hereby accorded Rule 1.47(a) status. As provided in Rule 1.47(c), this Office will forward notice of this application's filing to the non-signing inventor at the address given in the petition. Notice of the filing of this application will also be published in the Official Gazette.

Telephone inquiries regarding this decision should be directed to Irvin Dingle at (703) 306-5684.

This application is being forwarded to Technology Center AU 3713.

Frances Hicks
Lead Petitions Examiner
Office of Petitions
Office of the Deputy Commissioner
for Patent Examination Policy

UNITED STATES PATENT AND TRADEMARK OFFICE

COMMISSIONER FOR PATENTS
UNITED STATES PATENT AND TRADEMARK OFFICE
P.O. BOX 1450
ALEXANDRIA, VA 22313-1450
www.uspto.gov

DANIEL ERICSON
603 HILL AVENUE SOUTHWEST
ROCHESTER, MN 55902

COPY MAILED

FEB 19 2004

OFFICE OF PETITIONS

In re Application of
Daniel G. Ericson; Shivpal S. Sandhu
Application No. 10/389,696
Filed: March 14, 2003
For: COATED SURFACES FOR IMMOBILIZING NEGATIVELY CHARGED ANTICOAGULATING AGENTS FROM BLOOD FLUID

Dear Mr. Ericson:

You are named as a joint inventor in the above identified United States patent application, filed under the provisions of 35 U.S.C. 116 (United States Code), and 37 CFR 1.47(a), Rules of Practice in Patent Cases. Should a patent be granted on the application you will be designated therein as a joint inventor.

As a named inventor you are entitled to inspect any paper in the file wrapper of the application, order copies of all or any part thereof (at a prepaid cost per 37 CFR 1.19) or make your position of record in the application. Alternatively, you may arrange to do any of the preceding through a registered patent attorney or agent presenting written authorization from you. If you care to join in the application, counsel of record (see below) would presumably assist you. Joining in the application would entail the filing of an appropriate oath or declaration by you pursuant to 37 CFR 1.63.

Telephone inquiries regarding this communication should be directed to the Irvin Dingle at (703) 306-5684. Requests for information regarding your application should be directed to the File Information Unit at (703) 308-2733. Information regarding how to pay for and order a copy of the application, or a specific paper in the application, should be directed to Certification Division at (703) 308-9726 or 1 (800) 972-6382 (outside the Washington D.C. area).

Frances Hicks

Frances Hicks
Lead Petitions Examiner
Office of Petitions
Office of the Deputy Commissioner
for Patent Examination Policy

cc:

Brad Pedersen
Patterson, Thuente, Skaar & Christensen P.A.
4800 IDS Center
80 South 8th Street
Minneapolis, MN 55402-2100

UNITED STATES PATENT AND TRADEMARK OFFICE

COMMISSIONER FOR PATENTS
UNITED STATES PATENT AND TRADEMARK OFFICE
P.O. BOX 1450
ALEXANDRIA, VA 22313-1450
www.uspto.gov

Paper No. 5

COPY MAILED

JAN 23 2004

OFFICE OF PETITIONS

LAW OFFICE OF CHARLES E. KRUEGER
P.O. BOX 5607
WALNUT CREEK, CA 94596-1607

In re Application of Ulrich Kienitz :
Application No. 10/389,703 :
Filed: March 13, 2003 :
Attorney Docket No. 004-2-2 :
For: Radiometer With Digital Imaging System :

DECISION REFUSING TO ACCORD STATUS UNDER 37 CFR 1.47(b)

This is in response to the petition under 37 CFR 1.47(b), filed December 19, 2003.

The petition is **dismissed**.

Any request for reconsideration of this decision must be submitted within TWO (2) MONTHS from the mail date of this decision. Extensions of time under 37 CFR 1.136(a) are permitted. Any response should be entitled "Request for Reconsideration of Petition Under 37 CFR 1.47(b)" and may include an oath or declaration executed by the inventor. **Failure to respond will result in abandonment of the application.**

A grantable petition under 37 CFR 1.47(b) requires:

(1) proof that the non-signing inventor cannot be reached or refuses to sign the oath or declaration;
(2) an acceptable oath or declaration;
(3) the petition fee;
(4) a statement of the last known address of the non-signing inventor;
(5) proof of proprietary interest; and
(6) proof of irreparable damage.

Applicant lacks items (2) and (5).

As to item (2), the 37 CFR 1.47(b) applicant must make the oath required by 37 CFR 1.63 and 1.64 or 1.175. Where a corporation is the 37 CFR 1.47(b) applicant, an officer (President, Vice-President, Secretary, or Treasurer) thereof should normally sign the necessary oath or declaration. A corporation may authorize any person, including an attorney or agent registered to practice before the Patent and Trademark Office, to sign the application oath or declaration on its behalf. Where an oath or declaration is signed by a registered attorney or agent on behalf of a corporation, either proof of the attorney's or agent's authority in the form of a statement signed by an appropriate corporate officer must be submitted, or the attorney or agent may simply state that he or she is authorized to sign on behalf of the corporation. Where the oath or declaration is being signed on behalf of an assignee, see MPEP Section 324. Where an application is executed by one other than the inventor, the declaration required by 37 CFR 1.63 must state the full name, residence, post office address, and citizenship of the nonsigning inventor. Also, the title or position of the person signing must be stated if signing on behalf of a corporation under 37 CFR 1.47(b).

In addition to the above, the declaration fails to list the mailing and residential addresses for the non-signing inventor.

As to item (5), Rule 47 applicant has failed to show or provide proof that it has sufficient proprietary interest in the subject matter to justify the filing of the application (see MPEP 409.03(f)). Acceptable proof would include a copy of the employment agreement between the non-signing inventor and the Rule 47(b) applicant (company), a copy of an assignment agreement showing that the invention disclosed in the application is assigned to the Rule 47(b) applicant, or a legal memorandum signed by an attorney familiar with the law of the jurisdiction stating that a court of competent jurisdiction would by the weight of authority in that jurisdiction award the title of the invention to the Rule 47(b) applicant. Although a copy of an employment contract has been provided, the portions which have not been redacted do not indicate any obligation on the part of the employee to assign inventions to the company or to sign papers related to inventions.

Further correspondence with respect to this matter should be addressed as follows:

By mail: Mail Stop Petition
Commissioner for Patents
P.O. Box 1450
Alexandria, VA 22313-1450

By facsimile: (703) 872-9306
Attn: Office of Petitions

By hand: U.S. Patent and Trademark Office
2011 South Clark Place
Customer Window
Crystal Plaza Two, Lobby, Room 1B03
Arlington, VA 22202

If a request for reconsideration is filed, and a decision on the new petition is not received within three months, petitioner may wish to call the number below to check on the status of the renewed petition.

Telephone inquiries should be directed to Petitions Attorney Steven Brantley at (703) 306-5683.

Charles Steven Brantley
Petitions Attorney
Office of Petitions

UNITED STATES PATENT AND TRADEMARK OFFICE

Commissioner for Patents
United States Patent and Trademark Office
P.O. Box 1450
Alexandria, VA 22313-1450
www.uspto.gov

Paper No. 10

LAW OFFICE OF CHARLES E. KRUEGER
P.O. BOX 5607
WALNUT CREEK, CA 94596-1607

COPY MAILED

SEP 0 9 2004

OFFICE OF PETITIONS

In re Application of Ulrich Kienitz	:	DECISION ACCORDING
Application No. 10/389,703	:	STATUS UNDER
Filed: March 13, 2003	:	37 CFR 1.47(b)
Attorney Docket No. 004-2-2	:	
For: Radiometer With Digital Imaging System	:	

This is in response to the renewed petition under 37 CFR 1.47(b), filed June 28, 2004.

The petition is **granted**.

This application and papers have been reviewed and found in compliance with 37 CFR 1.47(b). This application is hereby accorded Rule 1.47(b) status.

As provided in Rule 1.47(c), this Office will forward notice of this application's filing to the non-signing inventor at the address given in the petition. Notice of the filing of this application will also be published in the Official Gazette.

The file will now be forwarded to the Office of Initial Patent Examination for further processing.

Telephone inquiries may be directed to Petitions Attorney Steven Brantley at (703) 306-5683 prior to September 27, 2004, and (571) 272-3203 thereafter.

Charles Steven Brantley
Petitions Attorney
Office of Petitions

OIPE JC67
JUL 14 2003
PATENT & TRADEMARK OFFICE

RECEIVED
JUL 10 2003
PRACTICE SYSTEMS

HRT
SRS
JRS

13906-038001

UNITED STATES PATENT AND TRADEMARK OFFICE

Commissioner for Patents
United States Patent and Trademark Office
P.O. Box 1450
Alexandria, VA 22313-1450
www.uspto.gov

Paper No. 5

FISH & RICHARDSON, P.C.
3300 DAIN RAUSCHER PLAZA
60 SOUTH SIXTH STREET
MINNEAPOLIS MN 55402

COPY MAILED

JUL 03 2003

OFFICE OF PETITIONS

In re Application of Thomas Bach, Steffen Tatzel, Martin Semmler, and Rainer Brendle	:	
Application No. 10/389,713 Filed: March 14, 2003 Attorney Docket No.: 13906-038001 Title: RETRIEVING DATA FOR GENERATING VIEW COMPONENTS	:	DECISION GRANTING PETITION

This is a decision on the petition under 37 C.F.R. §1.53(e)(2), which is properly treated as a petition under 37 CFR §1.53(b), filed May 19, 2003, requesting Figures one through fifteen (1-15) be accorded a filing date of March 14, 2003, as part of the original disclosure.

On March 14, 2003, the above-identified application was filed. On May 7, 2003, the Office of Initial Patent Examination (OIPE) mailed a "Notice of Omitted Item(s) in a Nonprovisional Application" (Notice), advising applicant that the drawings, the basic filing fee, and the oath or declaration appeared to have been omitted.

In response, on May 19, 2003, applicants filed the present petition. The petition is further accompanied by a copy of eighteen (18) sheets of drawings containing Figures one through fifteen (1-15), along with a copy of applicants' postcard receipt

acknowledging receipt of eighteen (18)sheets of drawings in the United States Patent and Trademark Office (Office) on March 14, 2003. Applicants request that Figures one through fifteen (1-15) be accorded a filing date of March 14, 2003.

Upon review of the record, eighteen (18) sheets of drawings containing Figures one through 15 (1-15) have not been located among the application papers. However, the evidence is convincing that the application papers deposited on March 14, 2003 included Figures one through fifteen (1-15), and the eighteen (18) sheets of drawings containing these Figures were subsequently misplaced in the Office.

Therefore, the application, including eighteen (18) sheets of drawings, containing Figures one through fifteen (1-15), was complete on filing and entitled to a filing date of March 14, 2003, as part of the original disclosure.

Accordingly, the petition is **GRANTED**.

The basic filing fee has been charged to Petitioner's Deposit Account, as authorized in the petition.

Petitioner is reminded that an oath or declaration will need to be submitted.

The portion of the Notice mailed May 7, 2003 pertaining to the non-receipt of drawings was sent in error. Therefore, no petition fee is necessary. The petition fee has been refunded to petitioner's Deposit Account, as authorized in the petition.

The application file is being returned to the Office of Initial Patent Examination for further processing with a filing date of March 14, 2003, using the original application papers filed on that date, as well as Figures one through fifteen (1-15) submitted on May 19, 2003.

Any inquiries related to this decision should be directed to Petitions Attorney Paul Shanoski at (703) 305-0011.

Beverly Flanagan
Supervisory Petitions Examiner
Office of Petitions
United States Patent and Trademark Office

Already
Docketed By Practice Systems
Action Code: Missing Parts NO NOTICE*
Base Date: 14 MAR 03
Due Date: 14 JUL 03
Deadline: 14 SEP 03
Initials: RMZ
Record:

* Dec/POA, surcharge needed

UNITED STATES PATENT AND TRADEMARK OFFICE

COMMISSIONER FOR PATENTS
UNITED STATES PATENT AND TRADEMARK OFFICE
P.O. BOX 1450
ALEXANDRIA, VA 22313-1450

Paper No. 4

YOUNG & THOMPSON
745 SOUTH 23RD STREET 2ND FLOOR
ARLINGTON VA 22202

COPY MAILED

SEP 2 6 2003

OFFICE OF PETITIONS

In re Application of
Kazuo Kamata
Application No. 10/389,740
Filed: March 18, 2003
Attorney Docket No. 8012-1151-1
Title: LENS-FITTED PHOTO FILM UNIT AND PHOTOFINISHING METHOD

DECISION ON PETITION

This is a decision on the "Petition under 37 C.F.R. §1.182," which is properly treated as a petition under 37 CFR 1.53(b), filed June 26, 2003, requesting that the above-identified application be accorded a filing date of March 18, 2003, with Figures twenty-one, twenty-two A, twenty-two B, and twenty-two C (21 and 22A-C) as part of the original disclosure of the application.

The application was filed on March 18, 2003. However, on June 10, 2003, Initial Patent Examination Division (OIPE) mailed a notice stating that the application had been accorded a filing date, and advising applicants that the application was deposited without Figures twenty-one, twenty-two A, twenty-two B, and twenty-two C (21 and 22A-C).

On August 15, 2003, the Office mailed a notice withdrawing the notice of June 10, 2003, stating that it had been sent in error. Obviously, this petition was filed prior to the mailing of the notice of August 15, 2003.

As such, the instant petition is **DISMISSED AS MOOT**.

Since the notice was sent in error, no petition fee is necessary. As such, the petition fee has not been charged to petitioner's Deposit Account.

Telephone inquiries specific to this matter should be directed to Attorney Paul Shanoski at (703) 305-0011.

Beverly M. Flanagan
Supervisory Petitions Examiner
Office of Petitions
United States Patent and Trademark Office

UNITED STATES PATENT AND TRADEMARK OFFICE

Commissioner for Patents
United States Patent and Trademark Office
P.O. Box 1450
Alexandria, VA 22313-1450
www.uspto.gov

MILES & STOCKBRIDGE PC
1751 PINNACLE DRIVE
SUITE 500
MCLEAN VA 22102-3833

COPY MAILED

APR 28 2008

In re Application of:	:	
Kinoshita et al.	:	
Pat. Num.: 6948228	:	
Issue Date: 09/27/2005	:	
Application No. 10/389749	:	ON PETITION
Filing or 371(c) Date: 03/18/2003	:	
Atty. Docket No. XA-9433A	:	

This is a decision on the Petition Under 37 CFR 1.181," filed April 24, 2007, requesting a duplicate Letters Patent. The petition is properly treated under 37 CFR 1.182. The delay in treating this petition is regretted.

The petition is **GRANTED**.

The Publishing Division is directed to issue a duplicate Letters Patent.

The $400 fee for the petition under 37 CFR 1.182 has been assessed to petitioner's deposit account.

Questions concerning this decision may be directed to the undersigned at 571-232-3232. Inquiries regarding the issuance of a duplicate Letters Patent may be directed to Niomi Farmer, in the Office of Data Management at (703) 308-9250, Ext. 119.

A copy of this decision is being faxed to the Office of Data Management for issuance of a duplicate Letters Patent.

Derek L. Woods
Attorney
Office of Petitions

CC: Niomi Farmer
South Tower 8th floor, Room C-32 (FAX 571-270-9937)

UNITED STATES PATENT AND TRADEMARK OFFICE

Commissioner for Patents
United States Patent and Trademark Office
P.O. Box 1450
Alexandria, VA 22313-1450
www.uspto.gov

MAY 21 2007

BIRCH STEWART KOLASCH & BIRCH
P. O. BOX 747
FALLS CHURCH, VA 22040-0747

In re Application of	:
Michael A. Kamm et al	:
Serial No.: 10/389,773	: PETITION DECISION
Filed: March 18, 2003	:
Attorney Docket No.: 3920-0113P	:

This is in response to the petition under 37 CFR 1.181, filed March 22, 2007, requesting withdrawal of Finality of the Office action mailed March 14, 2007.

BACKGROUND

A review of the file history shows that the examiner mailed a restriction requirement to applicants on November 16, 2005, to which applicants replied on March 16, 2006, by canceling claims 1-11, leaving only claims 12-22 for prosecution.

The examiner mailed a non-Final Office action to applicants on June 30, 2006, in which claims 12-18 were rejected under 35 U.S.C. 112, second paragraph, as indefinite and with suggestions as to how to overcome the rejection. Claims 12-22 were rejected for obvious double patenting over PN 6,635,678. Claims 12-20 and 22 were rejected under 35 U.S.C. 103(a) as unpatentable over Yamato et al in view of Speakman et al and further in view of Drug Facts.

Applicants replied on December 29, 2006, amending claims 12-15 and 18 and responding to the art rejections of record. The amendments mainly consisted of changing "active agent" to "α adrenergic agonist" in the dependent claims to ensure agreement with claim 12 from which they depend, thus limiting all claims to a specific agonist as suggested by the examiner.

The examiner mailed a Final Office action to applicants on March 14, 2007, withdrawing the rejections under 35 U.S.C. 112, second paragraph, and for obvious double patenting. The rejection of claims 12-22 (note claim 21 was not previously rejected) under 35 U.S.C. 103(a) was maintained for reasons of record. A new rejection under 35 U.S.C. 102(b) of claims 12-22 as anticipated by Byrne et al as evidenced by Hechtman was set forth. The action was made Final on the basis that applicants' amendments necessitated the new ground of rejection.

Applicants filed this petition on March 22, 2007 requesting withdrawal of the finality of the Office action.

DISCUSSION

Applicants request withdrawal of the finality of the Office action of March 14, 2007, on the basis that the examiner has made the Office action Final but included a new ground of rejection not necessitated by applicants' amendments, which is impermissible.

It is clear from a review of the Office actions and applicants' reply that applicants' amendments were only that which the examiner requested and did not change the scope of the claims to any significant degree, but merely clarified and limited them in an expected manner. Thus inclusion of a new ground of rejection in the last Office action and making of that Office action Final was improper.

The finality of the Office action mailed March 14, 2007, is withdrawn and the action is designated a non-Final Office action.

DECISION

The petition is **GRANTED.**

Applicants remain under obligation to reply to the Office action of March 14, 2007 within the time period set therein which Office action is a non-Final Office action.

Should there be any questions about this decision please contact William R. Dixon, Jr., by letter addressed to Director, TC 1600, at the address listed above, or by telephone at 571-272-0519 or by facsimile sent to the general Office facsimile number 571-273-8300.

Bruce M. Kisliuk
Director, Technology Center 1600

10/389782

SPE RESPONSE FOR CERTIFICATE OF CORRECTION

Paper No.: _____

DATE : 11-30-05

TO SPE OF : ART UNIT 2838

SUBJECT : Request for Certificate of Correction on Patent No.: 6956304

A response is requested with respect to the accompanying request for a certificate of correction.

Please complete this form and return with file, within 7 days to:

Certificates of Correction Branch - ~~PK 3-922~~ South Tower 9A20

Palm location **7580** - Tel. No. 305-8309

With respect to the change(s) requested, correcting Office and/or Applicant's errors, should the patent read as shown in the certificate of correction? No new matter should be introduced, nor should the scope or meaning of the claims be changed.

Check Spec.

Thank You For Your Assistance

Certificates of Correction Branch

The request for issuing the above-identified correction(s) is hereby:

Note your decision on the appropriate box.

☒ **Approved**	All changes apply.
☐ **Approved in Part**	Specify below which changes **do not** apply.
☐ **Denied**	State the reasons for denial below.

Comments:

no new matter

KARL D. EASTHOM
PRIMARY EXAMINER

SPE

2838

Art Unit

PTOL-306 (REV. 7/03)

U.S. DEPARTMENT OF COMMERCE Patent and Trademark Office

UNITED STATES PATENT AND TRADEMARK OFFICE

Commissioner for Patents
United States Patent and Trademark Office
P.O. Box 1450
Alexandria, VA 22313-1450
www.uspto.gov

STOEL RIVES LLP - SLC
201 SOUTH MAIN STREET, SUITE 1100
ONE UTAH CENTER
SALT LAKE CITY, UT 84111

MAILED

NOV 19 2009

OFFICE OF PETITIONS

In re Patent No. 7,018,982	:	
Issue Date: March 28, 2006	:	
Application No. 10/389,797	:	NOTICE
Filed: March 18, 2003	:	
Attorney Docket No. 36636/28	:	

This is a notice regarding your request for acceptance of a fee deficiency submission under 37 CFR 1.28.

The Office no longer investigates or rejects original or reissue patent under 37 CFR 1.56. **1098 Off. Gaz. Pat. Office 502 (January 3, 1989)**. Therefore, nothing in this Notice is intended to imply that an investigation was done.

Your fee deficiency submission under 37 CFR 1.28 is hereby **ACCEPTED**.

This patent is no longer entitled to small entity status. Accordingly, all future fees paid in this patent must be paid at the large entity rate.

Inquiries related to this communication should be directed to the undersigned at (571) 272-6059.

A. Kelley

Alicia Kelley
Petitions Examiner
Office of Petitions

UNITED STATES PATENT AND TRADEMARK OFFICE

Commissioner for Patents
United States Patent and Trademark Office
P.O. Box 1450
Alexandria, VA 22313-1450
www.uspto.gov

BIRCH STEWART KOLASCH & BIRCH
PO BOX 747
FALLS CHURCH VA 22040-0747

COPY MAILED

FEB 05 2007

OFFICE OF PETITIONS

In re Patent Weinmann et al.	:	
Application Number: 10/389,814	:	DECISION ON PETITION
Patent: 6,908,953 Attorney Docket No.: 0475-0215P	:	
Filing Date: March 18, 2003	:	
Issue Date: June 21, 2005	:	

This is a decision on the petition filed August 10, 2006 under 37 CFR 3.81(b) correct the name of the assignee on the front page of the above-identified patent by way of a Certificate of Correction.

The petition is **Granted**.

This application is being forwarded to the Certificate of Correction Branch for issuance of the requested Certificate of Correction.

Telephone inquiries concerning this matter should be directed to the undersigned at (571) 272-3215. Any questions concerning the issuance of the Certificate of Correction should be directed to the Certificate of Correction Branch at (703) 305-8309.

Charlema R. Grant

Charlema R. Grant
Petitions Attorney
Office of Petitions

UNITED STATES PATENT AND TRADEMARK OFFICE

Commissioner for Patents
United States Patent and Trademark Office
P.O. Box 1450
Alexandria, VA 22313-1450
www.uspto.gov

APR - 7 2005

BIRCH, STEWART, KOLASH & BIRCH
P. O. BOX 747
FALLS CHURCH, VA 22040-0747

In re Application of	:
Susan M. Daluge et al	:
Serial No.: 10/389,815	: PETITION DECISION
Filed: March 18, 2003	:
Attorney Docket No.: 2801-0189P	:

This is in response to the petition under 37 CFR 1.181, filed January 31, 2005, requesting withdrawal of the Final rejection.

BACKGROUND

A review of the file history shows that this application is a continuation of earlier application 08/957,045 abandoned after decision by the Board of Patent Appeals and Interferences (hereinafter Board) and contains claims 1-6 as amended by Preliminary amendment filed May 20, 2004. The examiner mailed a (first and) Final Office action to applicants on October 28, 2004, setting a three month shortened statutory period for reply. The Office action sets forth the following rejections: claims 1-2 and 6 under 35 U.S.C. 112, second paragraph, as indefinite; claims 1-6 under 35 U.S.C. 103(a) as obvious over Daluge '697 in view of Vince '224 or Daluge '671 further in view of Norbeck, Vince '607, Bothwick or Shealy; claims 9 and 18-22 (sic 1-6) under 35 U.S.C. 103(a) as unpatentable over Norbeck, Vince '607, Bothwick or Shealy in view of EP 413,544 or Daluge '697. The examiner specifically notes that each of these rejections was argued before the Board by applicants in the previous application.

DISCUSSION

Applicants' petition requests withdrawal of the Finality of the Office action in view of applicants' preliminary amendment to the claims and the failure of the examiner to comment on the remarks accompanying the amendments. The amendments and remarks have been carefully reviewed as has been the Office action by the examiner.

The amendments made by applicants to the claims do clarify and narrow the claims to a minimal extent by restricting the scope of the term "acyclic". This, however, does not address any of the rejections directly which were before the Board. Applicants' remarks do address the rejections before the Board in an attempt to persuade the examiner to reverse the decision of the Board. It is noted that the examiner states in the first paragraph of the Office action that the claims under consideration are the claims that existed at the time of the Board decision. Other than the minor

amendment to narrow the term "acyclic" this is a correct statement. Since the same claims are presented, the same rejections as affirmed by the Board must be maintained by the examiner. This the examiner has done.

The examiner has not directly commented on applicants' preliminary amendment or evidence presented therein (as argued by applicants), but appears to have taken into consideration the preliminary amendment without commenting on it. That the Summary sheet does not reflect this is indicative only of an oversight by the examiner in preparing the Summary sheet. It is also presumed that the evidence presented (or its equivalent) was before the Board and fully considered by it. In view of the fact that no new issues appear to be raised by applicants in their preliminary amendment, only argument, the examiner's action in making the Office action Final was not improper.

The petition is **DENIED.**

Applicants' remain under obligation to reply to the Office action mailed October 28, 2004, within the time period set therein, or as may be extended under 37 CFR 1.136(a).

Should there be any questions about this decision please contact William R. Dixon, Jr., by letter addressed to Director, TC 1600, at the address listed above, or by telephone at 571-272-0519 or by facsimile sent to the general Office facsimile number 571-273-8300.

Bruce M. Kisliuk
Director, Technology Center 1600

UNITED STATES PATENT AND TRADEMARK OFFICE

Commissioner for Patents
United States Patent and Trademark Office
P.O. Box 1450
Alexandria, VA 22313-1450
www.uspto.gov

JUL 20 2005

BIRCH, STEWART, KOLASH & BIRCH
P. O. BOX 747
FALLS CHURCH, VA 22040-0747

In re Application of	:
Susan M. Daluge et al	:
Serial No.: 10/389,815	: PETITION DECISION
Filed: March 18, 2003	:
Attorney Docket No.: 2801-0189P	:

This is in response to the renewed petition under 37 CFR 1.181, filed May 17, 2005, requesting withdrawal of the Final rejection.

BACKGROUND

A review of the file history shows that this application is a continuation of earlier application 08/957,045 abandoned after decision by the Board of Patent Appeals and Interferences (hereinafter Board) and contains claims 1-6 as amended by Preliminary amendment filed May 20, 2004. The examiner mailed a (first and) Final Office action to applicants on October 28, 2004, setting a three month shortened statutory period for reply. The Office action set forth the following rejections: claims 1-2 and 6 under 35 U.S.C. 112, second paragraph, as indefinite; claims 1-6 under 35 U.S.C. 103(a) as obvious over Daluge '697 in view of Vince '224 or Daluge '671 further in view of Norbeck, Vince '607, Bothwick or Shealy; claims 9 and 18-22 (sic 1-6) under 35 U.S.C. 103(a) as unpatentable over Norbeck, Vince '607, Bothwick or Shealy in view of EP 413,544 or Daluge '697. The examiner specifically notes that each of these rejections was argued before the Board by applicants in the previous application.

A petition decision denying applicants' request to withdraw the finality of the Office action with reasons set forth was mailed April 1, 2005.

A Notice of Appeal was filed April 28, 2005, with the required extension of time request and fees.

An amendment after Final rejection and this renewed petition providing additional argument and evidence of examiner error were filed May 17, 2005. An Advisory Action was mailed to applicants on May 31, 2005.

DISCUSSION

The previous petition decision, mailed April 7, 2005, denied applicants' request to withdraw the finality of the Office action based on the examiner's perceived consideration of the preliminary amendment which was not commented on directly, but appeared to be indirectly commented on. Applicants' arguments were not convincing of error on the examiner's part at that time.

Applicants' renewed petition points out and provides additional evidence that the preliminary amendment and exhibits provided therewith were not properly considered by the examiner and that consideration thereof would likely have resulted in a non-Final Office action. A second review of the preliminary amendment shows that arguments related to the term "phosphonyl" and its use accompanied by evidence that it is a term of common usage and understood in the art as to its structure were overlooked or not considered by the examiner. In like manner applicants' arguments concerning the terms "glycosidic bond" and "acyclic" were not considered or properly addressed. Applicants state that the evidence and arguments presented in the preliminary amendment were not the same as those presented before the Board of Patent Appeals and Interferences, although those arguments were also included as part of the argument.

The petition is **GRANTED.**

The Office action mailed October 28, 2004, is withdrawn as incomplete in that it fails to address the preliminary amendment timely presented on May 20, 2004. The Notice of Appeal filed in response to the Office action is held in abeyance until such time as the application is properly Finally rejected.

The application will be forwarded to the examiner for preparation of a new Office action which takes into consideration the preliminary amendment of May 20, 2004, and the reply filed May 17, 2005.

Should there be any questions about this decision please contact William R. Dixon, Jr., by letter addressed to Director, TC 1600, at the address listed above, or by telephone at 571-272-0519 or by facsimile sent to the general Office facsimile number 571-273-8300.

Bruce M. Kisliuk
Director, Technology Center 1600

UNITED STATES PATENT AND TRADEMARK OFFICE

COMMISSIONER FOR PATENTS
UNITED STATES PATENT AND TRADEMARK OFFICE
P.O. BOX 1450
ALEXANDRIA, VA 22313-1450
www.uspto.gov

JUN 22 2005

GOTTLIEB RACKMAN & REISMAN PC
270 Madison Avenue
8th Floor
New York, NY 10016-0601

In re Application of
Richard Fraczek
Application No. 10/389,837
Filed: March 17, 2003
For: MONO CONTROL LIFT AND TILT MECHANISM FOR HORIZONTAL BLINDS

DECISION ON PETITION TO WITHDRAW THE HOLDING OF ABANDONMENT

This is in reply to the petition to withdraw the holding of abandonment under 37 CFR 1.181, filed in the United States Patent and Trademark Office, on October 26, 2004.

The petition is **GRANTED** in view of the following evidence of timely filing :

☒ Postcard receipt being dated February 26, 2004.

☐ USPTO return facsimile receipt dated _____ which identifies the application by serial number and the type of Response that was filed on that date.

☐ Certificate of Mailing/Transmission signed on _____ and supported by a statement under 37 C.F.R. 1.8(b)(3).

☐ Hand Delivery Receipt of the specific documents submitted dated _____.

☐ Certificate of Transmission of CPA under 37 C.F.R. 1.6 filed on _____.

☐ Express Mail Receipt under 37 C.F.R. 1.10 dated _____.

This application is being forwarded to the Supervisory Legal Instruments Examiner for entry of the response filed with the petition, then to the examiner for prompt action on the response.

RAR/jwk: 3/1/05

Randolph A. Reese
Special Programs Examiner
Group 3600

UNITED STATES PATENT AND TRADEMARK OFFICE

Commissioner for Patents
United States Patent and Trademark Office
P.O. Box 1450
Alexandria, VA 22313-1450
www.uspto.gov
DIW Jan-06

ROBERT M DOWNEY P A
601 SOUTH FEDERAL HIGHWAY
SUITE 300
BOCA RATON FL 33432

COPY MAILED

JAN 09 2006

OFFICE OF PETITIONS

In re Application of	:	
Tomasetti et al.	:	
Application No. 10/389,855	:	ON PETITION
Filed: 14 March, 2003	:	
For: FLEXIBLE RAZOR AND	:	
DISPENSER WITH PIVOTING HEAD	:	

This is a decision on the petition filed on 18 April, 2005, to withdraw the holding of abandonment.

The Office apolgozies for the delay in responding to the present petition.

The petition is **DISMISSED**.

This application became abandoned on 16 October, 2004, for failure to submit a proper response to the final Office action mailed on 15 July, 2004, which set a three (3) month shortened statutory period for reply. A reply was filed on 4 October, 2004, but that reply was found not to place the case in *prima facie* case for allowance, and an Advisory Action was mailed on 25 October, 2004. Notice of Abandonment was mailed on 17 March, 2005. The Notice of Abandonment was returned as undeliverable on 29 March, 2005.

Petitioners assert that the amendment filed on 4 October, 2004, in response to the final Office action was in fact a proper reply, and requests, in essence, that the examiner reconsider the reply. Petitioners further aver that the Advisory Action was not received because it was mailed to an old current correspondence address.

A request for reconsideration, however, is not a proper reply to a final rejection. The required response to a final rejection must be an amendment that *prima facie* places the application in condition for allowance, a Notice of Appeal and fee, an RCE and a proper submission, or a continuing application.

As petitioners did not timely file any of the above, the application was properly held abandoned.

Furthermore, with regard to petitioners' assertion that the Advisory Action was never received: as stated previously, the only proper reply to a final Office action is (a) a continuing application, (b) a Notice of Appeal, (c) a Request for Continued Examination accompanied by a proper submission, or (d) an amendment which *prima facie* places the application in condition for allowance. In this case, petitioner submitted an amendment after final rejection. However, it is clear from 37 CFR 1.116 that abandonment of an application is risked when an amendment after a final Office action is filed. The rule clearly indicates that the mere filing of an amendment does not relieve petition of the duty of taking appropriate action to save the application from abandonment. Therefore, whether petitioners received an Advisory Action or not, prior to the expiration of the six month statutory period, the only right petitioner was entitled to was that of appealing the final rejection, filing a continuing application, or requesting continued examination by filing a submission and the required fee. This application became abandoned for failure on the part of petitioner to file an appeal, a continuing application, or a request for continued examination accompanied by a submission.

The petition is **DISMISSED.**

The petitioners may want to consider filing a petition to revive under 37 C.F.R. 1.137(b).

Any request for reconsideration must be filed within **TWO (2) MONTHS** of the date of this decision. Extensions of this time period are available in accordance with the provisions of 37 C.F.R. § 1.136(a).

Further correspondence with respect to this matter should be addressed as follows:

By mail: Mail Stop Petition
Commissioner for Patents
P.O. Box 1450
Alexandria, VA 22313-1450

By FAX: (571) 273-8300
Attn: Office of Petitions

By hand: Customer Service Window
Mail Stop Petition
Randolph Building
401 Dulany Street
Alexandria, VA 22314

Telephone inquiries related to this decision should be directed to the undersigned at 571-272-3231.

D Wood

Douglas I. Wood
Senior Petitions Attorney
Office of Petitions

UNITED STATES PATENT AND TRADEMARK OFFICE

Commissioner for Patents
United States Patent and Trademark Office
P.O. Box 1450
Alexandria, VA 22313-1450
www.uspto.gov
DIW Mar-06

ROBERT M DOWNEY P A
601 SOUTH FEDERAL HIGHWAY
SUITE 300
BOCA RATON FL 33432

COPY MAILED

MAR 23 2006

OFFICE OF PETITIONS

In re Application of	:	
Tomasetti et al.	:	
Application No. 10/389,855	:	ON PETITION
Filed: 14 March, 2003	:	
Atty Docket No. TOMLPA103	:	

This is a decision on the petition under 37 CFR 1.137(b)[1] filed on 7 February, 2006.

The petition is **GRANTED**.

The application became abandoned on 16 October, 2004, for failure to file a proper response to the final Office action mailed on 15 July, 2004, which set a three (3) month shortened statutory period for reply. A reply was filed on 4 October, 2004, but that reply was determined not to place the case in *prima facie* condition for allowance, and an Advisory Action was mailed on 25

---

[1] Effective December 1, 1997, the provisions of 37 CFR 1.137(b) now provide that where the delay in reply was unintentional, a petition may be filed to revive an abandoned application or a lapsed patent pursuant to 37 CFR 1.137(b). A grantable petition filed under the provisions of 37 CFR 1.137(b) must be accompanied by:

(1) the required reply, unless previously filed. In a nonprovisional application abandoned for failure to prosecute, the required reply may be met by the filing of a continuing application. In a nonprovisional utility or plant application filed on or after June 8, 1995, and abandoned for failure to prosecute, the required reply may also be met by the filing of a request for continuing examination in compliance with § 1.114. In an application or patent, abandoned or lapsed for failure to pay the issue fee or any portion thereof, the required reply must be the payment of the issue fee or any outstanding balance thereof. In an application, abandoned for failure to pay the publication fee, the required reply must include payment of the publication fee.

(2) the petition fee as set forth in 37 CFR 1.17(m);

(3) a statement that the entire delay in filing the required reply from the due date for the reply until the filing of a grantable petition pursuant to 37 CFR 1.137(b) was unintentional. The Commissioner may required additional information where there is a question whether the delay was unintentional; and

(4) any terminal disclaimer (and fee as set forth in 37 CFR 1.20(d)) required pursuant to 37 CFR 1.137(c)).

October, 2004. Notice of Abandonment was mailed on 17 March, 2005. The Notice of Abandonment was returned as undeliverable on 29 March, 2005. The petition filed on 18 April, 2005, was dismissed on 9 January, 2006.

The petition is accompanied by an amendment after final rejection. As the examiner has determined that the amendment is a proper reply and should be entered, the petition may be favorably considered.

The application is being referred to Technology Center Art Unit 3724 for further processing.

Telephone inquiries should be directed to the undersigned at 571-272-3231.

Douglas I. Wood
Senior Petitions Attorney
Office of Petitions

UNITED STATES PATENT AND TRADEMARK OFFICE

Commissioner for Patents
United States Patent and Trademark Office
P.O. Box 1450
Alexandria, VA 22313-1450
www.uspto.gov

PHILIP S. JOHNSON
JOHNSON & JOHNSON
ONE JOHNSON & JOHNSON PLAZA
NEW BRUNSWICK, NJ 08933-7003

COPY MAILED

FEB 23 2005

OFFICE OF PETITIONS

In re Application of	:	
Stephen S. Palmer et al	:	
Application No. 10/389,866	:	ON PETITION
Filed: March 17, 2003	:	
Attorney Docket No. ORT-1343 DIV	:	

This is a decision on the petition under 37 CFR 1.137(b), filed February 11, 2005, to revive the above-identified application.

The petition is **GRANTED**.

The above-identified application became abandoned for failure to reply in a timely manner to the non-final Office action mailed December 24, 2003, which set a shortened statutory period for reply of one (1) month. No extensions of time under the provisions of 37 CFR 1.136(a) were obtained. Accordingly, the above-identified application became abandoned on January 25, 2004.

An extension of time under 37 CFR 1.136 must be filed prior to the expiration of the maximum extendable period for reply. See In re Application of S., 8 USPQ2d 1630, 1631 (Comm'r Pats. 1988). Since the request for extension of time filed on February 11, 2005 is beyond the maximum extendable period, no extension of time fee was accessed to petitioner's deposit account.

Telephone inquiries concerning this decision should be directed to Wan Laymon at (571) 272-3220.

This matter is being referred to Technology Center AU 1614.

Wan Laymon
Wan Laymon
Petitions Examiner
Office of Petitions
Office of the Deputy Commissioner
for Patent Examination Policy

UNITED STATES PATENT AND TRADEMARK OFFICE

COMMISSIONER FOR PATENTS
UNITED STATES PATENT AND TRADEMARK OFFICE
P.O. BOX 1450
ALEXANDRIA, VA 22313-1450
WWW.USPTO.GOV

Paper No. None

PHILIP S. JOHNSON
JOHNSON & JOHNSON
ONE JOHNSON & JOHNSON PLAZA
NEW BRUNSWICK NJ 08933-7003

COPY MAILED
SEP 1 1 2006
OFFICE OF PETITIONS

In re Application of :
Stephen S. Palmer et al. :
Application No. 10/389,866 :
Filing Date: March 17, 2003 :
Attorney Docket Number: ORT-1343 :
DIV :
Title: METHODS AND KITS FOR :
TREATING AND DIAGNOSING :
LEIOMYOMAS :

DECISION ON PETITION
UNDER 37 C.F.R. § 1.137(B)

This is a decision on the petition under 37 CFR §1.137(b)[1], filed June 19, 2006, to revive the above-identified application.

The above-identified application became abandoned for failure to reply in a timely manner to the non-final Office action, mailed July 18, 2005 which set a shortened statutory period for reply of three months. No response was received, and no extensions of time under the provisions of 37 C.F.R. §1.136(a) were requested. Accordingly, the above-identified application became abandoned on October 19, 2005. A notice of abandonment was mailed on January 31, 2006.

---

1 A grantable petition pursuant to 37 CFR §1.137(b) must be accompanied by:
(1) The reply required to the outstanding Office action or notice, unless previously filed;
(2) The petition fee as set forth in §1.17(m);
(3) A statement that the entire delay in filing the required reply from the due date for the reply until the filing of a grantable petition pursuant to this paragraph was unintentional. The Commissioner may require additional information where there is a question whether the delay was unintentional, and;
(4) Any terminal disclaimer (and fee as set forth in § 1.20(d)) required pursuant to paragraph (d) of this section.

With the present petition, Petitioner has submitted the petition fee, a request for reconsideration, and the proper statement of unintentional delay. A terminal disclaimer is not required.

Petitioner has met all requirements for a grantable petition under 37 C.F.R. §1.137(b).

As such, the petition is **GRANTED**.

The Technology Center will be notified of this decision. The Technology Center's support staff will notify the Examiner of this decision, so that the amendment which was received with the present petition can be processed.

Telephone inquiries regarding *this decision* should be directed to the undersigned at (571) 272-3225[2]. All other inquiries concerning examination procedures or status of the application should be directed to the Technology Center.

Paul Shanoski
Senior Attorney
Office of Petitions
United States Patent and Trademark Office

---

2 Petitioner will note that all practice before the Office should be in writing, and the action of the Office will be based exclusively on the written record in the Office. See 37 C.F.R. §1.2. As such, Petitioner is reminded that no telephone discussion may be controlling or considered authority for Petitioner's further action(s).

UNITED STATES PATENT AND TRADEMARK OFFICE

Commissioner for Patents
United States Patent and Trademark Office
P.O. Box 1450
Alexandria, VA 22313-1450
www.uspto.gov

JUL 20 2004

DCM

In re Application of Paul B. Lancaster, et al. Serial Number: 10/389,868 Filed: March 18, 2003 For: AUTOMOTIVE EXHAUST COMPONENT AND METHOD OF MANUFACTURE	: : : : : : :	PETITION UNDER MPEP 708.02 VIII

This is in response to the Petition to Make Special filed April 21, 2004, requesting that the above-identified application be granted Special Status under section 708.02 VIII of the MPEP and 37 CFR 1.102(d). The fee set forth in 37 CFR 1.17(h) has been paid.

The criteria set forth in section 708.02 VIII of the MPEP and 37 CRF 1.102(d) have been met.

Accordingly the petition is **GRANTED.**

Marian C. Knode

Marian C. Knode, Special Programs Examiner
Technology Center 1700
Chemical and Materials Engineering

ERNEST D BUFF & ASSOCIATES, LLC
245 SOUTH ST
MORRISTOWN NJ 07960

UNITED STATES PATENT AND TRADEMARK OFFICE

COMMISSIONER FOR PATENTS
UNITED STATES PATENT AND TRADEMARK OFFICE
P.O. BOX 1450
ALEXANDRIA, VA 22313-1450
www.uspto.gov

MCDERMOTT WILL & EMERY LLP
600 13TH STREET, N.W.
WASHINGTON, DC 20005-3096

COPY MAILED

JAN 2 6 2006

OFFICE OF PETITIONS

In re Application of
Tetsuo Goto, et al.
Application No. 10/389,877
Filed: March 18, 2003
Attorney Docket No.: 58799-076

ON PETITION

This is a decision on the petition, filed January 19, 2006, under 37 CFR 1.313(c)(2) to withdraw the above-identified application from issue after payment of the issue fee.

The petition is **GRANTED**.

The above-identified application is withdrawn from issue for consideration of a submission under 37 CFR 1.114 (request for continued examination). See 37 CFR 1.313(c)(2).

Petitioner is advised that the issue fee paid on December 20, 2005, in the above-identified application cannot be refunded. If, however, the above-identified application is again allowed, petitioner may request that it be applied towards the issue fee required by the new Notice of Allowance. [1]

Telephone inquiries relating to this decision should be directed to the undersigned at (571) 272-3204.

The application is being referred to Technology Center AU 3653 for further processing of the request for continued examination under 37 CFR 1.114.

Sherry D. Brinkley
Petitions Examiner
Office of Petitions

[1]The request to apply the issue fee to the new Notice may be satisfied by completing and returning the new Issue Fee Transmittal Form PTOL-85(b), which includes the following language thereon: "Commissioner for Patents is requested to apply the Issue Fee and Publication Fee (if any) or re-apply any previously paid issue fee to the application identified above." Petitioner is advised that, whether a fee is indicated as being due or not, the Issue Fee Transmittal Form **must** be completed and timely submitted to avoid abandonment. Note the language in bold text on the first page of the Notice of Allowance and Fee(s) Due (PTOL-85).

UNITED STATES PATENT AND TRADEMARK OFFICE

COMMISSIONER FOR PATENTS
UNITED STATES PATENT AND TRADEMARK OFFICE
P.O. BOX 1450
ALEXANDRIA, VA 22313-1450
www.uspto.gov

BIRCH STEWART KOLASCH & BIRCH
PO BOX 747
FALLS CHURCH, VA 22040-0747

COPY MAILED
MAY 0 3 2006
OFFICE OF PETITIONS

In re Application of	:	
Sadamu Kuse, et al.	:	
Application No. 10/389,880	:	ON PETITION
Filed: March 18, 2003	:	
Attorney Docket No.: 0020-5124P	:	

This is a decision on the petition, filed May 1, 2006, under 37 CFR 1.313(c)(2) to withdraw the above-identified application from issue after payment of the issue fee.

The petition is **GRANTED**.

The above-identified application is withdrawn from issue for consideration of a submission under 37 CFR 1.114 (request for continued examination). See 37 CFR 1.313(c)(2).

Petitioner is advised that the issue fee paid on March 17, 2006, in the above-identified application cannot be refunded. If, however, the above-identified application is again allowed, petitioner may request that it be applied towards the issue fee required by the new Notice of Allowance. [1]

Telephone inquiries relating to this decision should be directed to the undersigned at (571) 272-3204.

The application is being referred to Technology Center AU 1773 for further processing of the request for continued examination under 37 CFR 1.114.

Sherry D. Brinkley
Petitions Examiner
Office of Petitions

[1]The request to apply the issue fee to the new Notice may be satisfied by completing and returning the new Issue Fee Transmittal Form PTOL-85(b), which includes the following language thereon: "Commissioner for Patents is requested to apply the Issue Fee and Publication Fee (if any) or re-apply any previously paid issue fee to the application identified above." Petitioner is advised that, whether a fee is indicated as being due or not, the Issue Fee Transmittal Form **must** be completed and timely submitted to avoid abandonment. Note the language in bold text on the first page of the Notice of Allowance and Fee(s) Due (PTOL-85).

UNITED STATES PATENT AND TRADEMARK OFFICE

Commissioner for Patents
United States Patent and Trademark Office
P.O. Box 1450
Alexandria, VA 22313-1450
www.uspto.gov

Date : May 2, 2006

TO : Director, Office of Patent Publication

FROM : Office of the Deputy Commissioner for Patent Examination Policy

SUBJECT : Withdrawal from Issue of

Applicant(s) : Sadamu Kuse, et al.
Application No. : 10/389,880
Filed : March 18, 2003

The above-identified application has been assigned Patent No. 7,045,226 and an issue date of May 16, 2006.

It is hereby directed that this application be withdrawn from issue at the request of the applicant.

Do not refund the issue fee.

The following erratum should be published in the Official Gazette if the above-identified application is published in the OG of May 16, 2006:

> "All reference to Patent No. 7,045,226 to SADAMU KUSE, ET AL. of JAPAN for MAGNETIC TAPE AND MAGNETIC TAPE CARTRIDGE appearing in the Official Gazette of May 16, 2006, should be deleted since no patent was granted."

Sherry D. Brinkley
Petitions Examiner
Office of Petitions

cc: Paul Harrison, Crystal Park 3-44l (FAX-306-2737)
Deneise Boyd, Crystal Park 2, Suite 1100 (FAX-308-5413)
Mary Louise McAskill, Crystal Park 3-910 (FAX 305-4372)
Niomi Farmer, Crystal Park 3-9l0 (FAX-305-4372)
Mary E. Johnson (Cookie), P/OCS, CM1-6D07
Duane K.Davis, P/OCS, CM1-6A07
Tamara K. Greene, PK3-910

UNITED STATES PATENT AND TRADEMARK OFFICE

COMMISSIONER FOR PATENTS
UNITED STATES PATENT AND TRADEMARK OFFICE
P.O. BOX 1450
ALEXANDRIA, VA 22313-1450
www.uspto.gov

ShterenBerg Yuriy
184 Linden St, apt D
Needham MA 02492

MAILED

OCT 15 2003

DIRECTOR'S OFFICE
TECHNOLOGY CENTER 3600

In re application of
Yuriy ShterenBerg
Application No.10/389.894
Filed: March 17, 2003
For: SYSTEM FOR SAFE DESCENT OF PEOPLE OR CARGOES

DECISION ON PETITION TO MAKE SPECIAL (APPLICANT'S AGE)

This is a decision on the petition submitted on March 17, 2003 under 37 CFR 1.102 (c) to make the above-identified application special under the accelerated examination procedure set forth in MPEP 708.02, Section IV: Applicant's Age. The delay in deciding this petition is sincerely regretted.

The petition is **GRANTED**.

An application may be accorded special status upon the filing of a petition providing evidence showing that the applicant is at least 65 years old. Such a showing may be provided by evidence such as a birth certificate or a statement from the applicant.

The evidence submitted with the petition is a form by applicant stating that he is at least 65 years of age.

The examiner is directed (1) to make an interference search for possible interfering applications, (2) to promptly examine this application out of turn, and (3) if any interfering application is discovered, to examine such application simultaneously and state in the first official letter of such application that it is being taken out of turn because of a possible interference.

Petitioner is advised that this application will continue to be special, throughout its entire prosecution and pendency, including interference or appeal, if any, only if petitioner makes a prompt ***bona fide*** effort, in response to each Office action, to place the application in condition for allowance, even if it is necessary to conduct an interview with the examiner to accomplish this purpose.

SUMMARY: Petition to Make Special **GRANTED**.

Steven N. Meyers
Special Programs Examiner
Technology Center 3600
(703) 308-3868

SNM/ekn 10/9/03

UNITED STATES PATENT AND TRADEMARK OFFICE

Commissioner for Patents
United States Patent and Trademark Office
P.O. Box 1450
Alexandria, VA 22313-1450
www.uspto.gov

ShterenBerg Yuriy
677 Winchester Street
Apt. 415
Newton, MA 02459

COPY MAILED

MAY 1 4 2008

OFFICE OF PETITIONS

In re Application of Yuriy ShterenBerg Application No. 10/389894 Filing or 371(c) Date: 03/17/2003 Title of Invention: SYSTEM FOR SAFE DESCENT OF PEOPLE OR CARGOES	: : : : : : :	DECISION ON PETITION

This is a decision on the "Petition to Revive Patent Application Unavoidably Abandoned Under 37 CFR 1.137(a), filed May 7, 2007, to revive the above-identified application. The delay in treating this petition is regretted.

This Petition is hereby **dismissed**.

Any further petition to revive the above-identified application must be submitted within TWO (2) MONTHS from the mail date of this decision. Extensions of time under 37 CFR 1.136(a) are permitted. The reconsideration request should include a cover letter entitled "Request for Reconsideration of Petition under [insert the applicable code section]". This is **not** final agency action within the meaning of 5 U.S.C. § 704.

Background

The above-identified application became abandoned for failure to timely and properly reply to the Office action, mailed August 25, 2006. The Office action set a One (1) month period for reply. Extensions of time were available under 37 CFR 1.136(a).

Applicant filed a reply on November 9, 2006; however, the reply was filed after the one (1) month reply period had expired. No timely and proper reply having been received, the application became abandoned on September 26, 2006. A Notice of Abandonment was mailed April 5, 2007.

The present petition

Applicant files the instant petition and a fee of $60.00.

A Grantable Petition Under 37 CFR 1.137(a)

A grantable petition pursuant to this paragraph must be accompanied by:
(1) The reply required to the outstanding Office action or notice, unless previously filed;
(2) The petition fee as set forth in § 1.17(m);
(3) A statement that the entire delay in filing the required reply from the due date for the reply until the filing of a grantable petition pursuant to this paragraph was unintentional. The Director may require additional information where there is a question whether the delay was unintentional; and
(4) Any terminal disclaimer (and fee as set forth in § 1.20(d)) required pursuant to paragraph (d) of this section.

The petition fee

As to item (2), Applicant is advised that before the merits of Applicant's petition may be considered, the petition fee must be submitted. The fee for a petition to revive an application based upon an unavoidable delay in responding to an Office communication is currently $255.00 for a small entity.

The Correspondence address

It is also noted that Applicant has unsuccessfully attempted to change his correspondence address. Applicant is advised that

> [t]he required notification of change of correspondence address need take no particular form. However, it should be provided in a manner calling attention to the fact that a change of address is being made. Thus, the mere inclusion, in a paper being filed for another purpose, of an address which is different from the previously provided correspondence address, without mention of the fact that an address change is being made would not ordinarily be recognized or deemed as instructions to change the correspondence address on the file record. MPEP 601.03.

Applicant is also advised that 37 CFR 1.4(c) requires that "each distinct subject, inquiry or order must be contained in a separate paper to avoid confusion and delay in answering papers dealing with different subjects."

The correspondence address change has been entered and made of record.

Unavoidable delay

Finally, Applicant has filed a petition stating that the delay in filing the required reply to the Office action was unavoidable. The following standard is applied to petitions to revive based upon an assertion that the failure to file a complete and proper reply to an Office action was unavoidable:

In order to determine whether the delay was unavoidable, the courts have adopted a "reasonably prudent person" standard. The courts have provided that:

> [t]he word 'unavoidable' . . . is applicable to ordinary human affairs, and requires no more or greater care or diligence than is generally used and observed by prudent and careful men in relation to their most important business. It permits them in the exercise of this care to rely upon the ordinary and trustworthy agencies of mail and telegraph, worthy and reliable employees, and such other means and instrumentalities as are usually employed in such important business. If unexpectedly, or through the unforeseen fault or imperfection of these agencies and instrumentalities, there occurs a failure, it may properly be said to be unavoidable, all other conditions of promptness in its rectification being present.

In re Mattullath, 38 App. D.C. 497, 514-15 (1912)(quoting Ex parte Pratt, 1887 Dec. Comm'r Pat. 31, 32-33 (1887)); see also Winkler v. Ladd, 221 F. Supp. 550, 552, 138 USPQ 666, 167-68 (D.D.C. 1963), aff'd, 143 USPQ 172 (D.C. Cir. 1963); Ex parte Henrich, 1913 Dec. Comm'r Pat. 139, 141 (1913). In addition, decisions on revival are made on a "case-by-case basis, taking all the facts and circumstances into account." Smith v. Mossinghoff, 671 F.2d 533, 538, 213 USPQ 977, 982 (D.C. Cir. 1982). Finally, a petition cannot be granted where a petitioner has failed to meet his or her burden of establishing that the delay was "unavoidable." Haines v. Quigg, 673 F. Supp. 314, 316-17, 5 USPQ2d 1130, 1131-32 (N.D. Ind. 1987).

"The critical phrase 'unless it be shown to the satisfaction of the Commissioner that such delay was unavoidable' has remained unchanged since first enacted in 1861." Smith v. Mossinghoff, 671 F.2d 533, 538, 213 U.S.P.Q. (BNA) 977 (D.C. Cir. 1982). The standard for "unavoidable" delay for reinstating a patent is the same as the unavoidable standard for reviving an application. See Ray v. Lehman, 55 F.3d 606, 608-609, 34 U.S.P.Q.2d (BNA) 1786, 1787 (Fed. Cir. 1995) (citing In re patent No. 4,409,763, 7 U.S.P.Q.2d (BNA) 1798, 1800 (Comm'r Pat. 1990; Smith v. Mossinghoff, 671 F.2d 533, 538, 213 U.S.P.Q. (BNA) 977 (D.C. Cir. 1982). The court in In re Mattullath, accepted the standard which had been proposed by Commissioner Hall which "requires no more or greater care or diligence than is generally used and observed by prudent and careful men in relation to their most important business." In re Mattullath, 38 App. D.C. 497, 514-515 (1912) (quoting Ex parte Pratt, 1887 Dec. Comm'r Pat. 31, 32-33 (1887)). However, "The question of whether an applicant's delay in prosecuting an application was unavoidable [will] be decided on a case-by-case basis, taking all of the facts and circumstances into account."[1] Nonawareness of the content of, or a misunderstanding of, PTO statutes, PTO rules, the MPEP, or Official Gazette notices, does not constitute unavoidable delay.[2]

---

[1] Smith v. Mossinghoff, 671 F.2d 533, 538, 213 U.S.P.Q. (BNA) 977 (1982).

[2] See Smith v. Mossinghoff, 671 F.2d 533, 538, 213 U.S.P.Q. (BNA) 977 (Fed. Cir. 1982) (citing Potter v. Dann, 201 U.S.P.Q. (BNA) 574 (D. D.C. 1978) for the proposition that counsel's nonawareness of PTO rules does not constitute "unavoidable" delay)); Vincent v. Mossinghoff, 1985 U.S. Dist. LEXIS 23119, 13, 230 U.S.P.Q. (BNA) 621 (D. D.C. 1985) (Plaintiffs, through their counsel's actions, **or their own**, must be held responsible for having

The statute requires a "showing" by petitioner. Therefore, petitioner has the burden of proof. The decision will be based solely on the written, administrative record in existence. It is not enough that the delay was unavoidable; petitioner must prove that the delay was unavoidable. A petition will not be granted if petitioner provides insufficient evidence to "show" that the delay was unavoidable.

Applicant is further advised that the Patent and Trademark Office must rely on the actions or inactions of duly authorized and voluntarily chosen representatives of the applicant, and applicant is bound by the consequences of those actions or inactions. Link v. Wabash, 370 U.S. 626, 633-34 (1962); Huston v. Ladner, 973 F.2d 1564, 1567, 23 USPQ2d 1910, 1913 (Fed. Cir. 1992); see also Haines v. Quigg, 673 F. Supp. 314, 317, 5 USPQ2d 1130, 1132 (D.N. Ind. 1987). Specifically, petitioner's delay caused by the actions or inactions of his voluntarily chosen representative does not constitute unavoidable delay within the meaning of 35 USC 133 or 37 CFR 1.137(a). Haines v. Quigg, 673 F. Supp. 314, 5 USPQ2d 1130 (D. Ind. 1987); Smith v. Diamond, 209 USPQ 1091 (D.D.C. 1981); Potter v. Dann, 201 USPQ 574 (D.D.C. 1978); Ex parte Murray, 1891 Dec. Comm'r Pat. 130, 131 (Comm'r Pat. 1891). In re Mattullath, 38 App. D.C. 497, 514-15 (1912)(quoting Ex parte Pratt, 1887 Dec. Comm'r Pat. 31, 32-33 (1887)); see also Winkler v. Ladd, 221 F. Supp. 550, 552, 138 USPQ 666, 167-68 (D.D.C. 1963), aff'd, 143 USPQ 172 (D.C. Cir. 1963); Ex parte Henrich, 1913 Dec. Comm'r Pat. 139, 141 (1913).

Applicant is advised that the statements appearing in the petition, that Applicant did not receive the Office actions, fails to meet the above standard. It is Applicant's responsibility to file a proper change of address as noted above. Applicant failed to do so. It is also Applicant's responsibility to file a complete and proper reply to an Office action in the first instance. Here again, Applicant filed several responses to several Office actions; however, none of the responses were complete and proper. As such, Applicant has not proven that the delay was unavoidable.

Alternate venue

Applicant is strongly urged to file a petition stating that the delay was unintentional. Public Law 97-247, § 3, 96 Stat. 317 (1982), which revised patent and trademark fees, amended 35 U.S.C. § 41(a)(7) to provide for the revival of an "unintentionally" abandoned application without a showing that the delay in was "unavoidable." An "unintentional" petition under 37 CFR 1.137(b) must be accompanied by the required fee.

The filing of a petition under 37 CFR 1.137(b) cannot be intentionally delayed and therefore must be filed promptly. A person seeking revival due to unintentional delay can not make a statement that the delay was unintentional unless the entire delay, including the delay from the date it was discovered that the application was abandoned until the filing of the petition to revive under 37 CFR 1.137(b), was unintentional. A statement that the delay was unintentional is not

---

noted the MPEP section and Official Gazette notices expressly stating that the certified mailing procedures outlined in 37 CFR 1.8(a) do not apply to continuation applications.) (Emphasis added).

appropriate if petitioner intentionally delayed the filing of a petition for revive under 37 CFR 1.137(b).

Further correspondence with respect to this matter should be addressed as follows:

By mail:	Director for Patents PO Box 1450 Alexandria, VA 22313-1450
By FAX:	(571) 273-8300 Attn: Office of Petitions
By hand:	Customer Service Window Randolph Building 401 Dulany Street Alexandria, VA 22314

Telephone inquiries concerning this decision should be directed to the undersigned at (571) 272-3232. All other inquiries should be directed to the applicable Office.

Derek L. Woods
Attorney
Office of Petitions

UNITED STATES PATENT AND TRADEMARK OFFICE

Commissioner for Patents
United States Patent and Trademark Office
P.O. Box 1450
Alexandria, VA 22313-1450
www.uspto.gov

ShterenBerg Yuriy
677 Winchester Street
Apt. 415
Newton, MA 02459

COPY MAILED

AUG 15 2008

In re Application of	:	
Yuriy ShterenBerg	:	
Application No. 10/389894	:	DECISION
Filing or 371(c) Date: 03/17/2003	:	ON PETITION
Title of Invention:	:	
SYSTEM FOR SAFE DESCENT OF PEOPLE OR	:	
CARGOES	:	

This is a decision on the Request for Reconsideration of Petition, filed July 14, 2008. The petition is properly treated under 37 CFR 1.137(b), to revive the above-identified application based upon unintentional abandonment[1].

This Petition is hereby **granted**.

The above-identified application became abandoned for failure to timely reply to the Office communication, mailed August 25, 2006. The Office communication set a one (1) month period for reply. Extensions of time under 37 CFR 1.136(a) were available.

Applicant filed a reply on November 9, 2006; however, the reply was filed after the one (1) month period for the reply had expired. No complete and proper (timely) reply having been received, the application became abandoned on September 26, 2006. A Notice of Abandonment was mailed April 5, 2007.

Applicant files the present petition, and a response to the Office communication was previously filed on November 9, 2006. The renewed petition satisfies the conditions for revival pursuant to the provisions of 37 CFR 1.137(b) in that (1) the reply in the form of a response to the Restriction/Election Requirement; (2) the petition fee; and (3) the required statement of unintentional delay are filed with the present petition[2]. Accordingly, the reply is accepted as having been unintentionally delayed.

---

[1] A petition to revive the application based upon unavoidable abandonment under 37 CFR 1.137(a), was filed on May 7, 2007, and dismissed in a Decision mailed May 14, 2008. The present petition was filed in response to the Decision dismissing the petition, and included a statement agreeing that the delay in responding to the Office action was not unavoidable, and also included the fee for a petition under 37 CFR 1.137(b).

[2] 37 CFR 1.137(b)(3) requires a statement that "the entire delay in filing the required reply from the due date for the reply until the filing of a grantable petition pursuant to 37 CFR 1.137(b) was unintentional." Since the statement

This application is being referred to Technology Center Art Unit 3634 for processing of the response in the normal course of business.

Telephone inquiries concerning this decision should be directed to the undersigned at (571) 272-3232.

/Derek L. Woods/
Derek L. Woods
Attorney
Office of Petitions

---

appearing in the petition varies from the language required by 37 CFR 1.137(b)(3), the statement is being construed as the required statement. Petitioner must notify the Office if this is **not** a correct reading of the statement appearing in the petition.

UNITED STATES PATENT AND TRADEMARK OFFICE

UNITED STATES DEPARTMENT OF COMMERCE
United States Patent and Trademark Office
Address: COMMISSIONER FOR PATENTS
P.O. Box 1450
Alexandria, Virginia 22313-1450
www.uspto.gov

APPLICATION NO.	FILING DATE	FIRST NAMED INVENTOR	ATTORNEY DOCKET NO.	CONFIRMATION NO.
10/389,929	03/18/2003	Peter Irma August Barri	Q74353	3562

7590 08/04/2009
SUGHRUE MION, PLLC
2100 Pennsylvania Avenue, N.W.
Washington, DC 20037-3213

EXAMINER
NGUYEN, PHUONGCHAU BA

ART UNIT	PAPER NUMBER
2416	

MAIL DATE	DELIVERY MODE
08/04/2009	PAPER

Please find below and/or attached an Office communication concerning this application or proceeding.

The time period for reply, if any, is set in the attached communication.

UNITED STATES PATENT AND TRADEMARK OFFICE

Commissioner for Patents
United States Patent and Trademark Office
P.O. Box 1450
Alexandria, VA 22313-1450
www.uspto.gov

David J. Cushing
SUGHRUE MION, PLLC
2100 Pennsylvania Avenue, N.W.
Washington DC 20037-3213

MAILED

AUG 04 2009

DIRECTOR OFFICE
TECHNOLOGY CENTER 2400

In re Application of:
Peter Irma August BARRI et al.
Application No. 10/389,929
Filed: March 18, 2003
For: METHOD AND APPARATUS FOR PACKET REORDERING IN A NETWORK PROCESSOR

DECISION ON PETITION
UNDER 37 C.F.R. § 1.181

This is a decision on the petition filed July 23, 2009 under 37 CFR § 1.181 to invoke Supervisory Authority of the Commissioner and require the Examiner to withdraw the finality of the rejection mailed June 25, 2009.

The Applicant's counsel filed a petition to the Director under 37 CFR § 1.181 to seek relief from actions of the Examiner in relation to the final Office action mailed June 25, 2009. In the petition, Applicant's counsel alleged that the finality of the Office action was premature because the Examiner introduced a new ground of rejection in the final Office action that was neither necessitated by applicant's amendment of the claims nor based on information submitted in an Information Disclosure Statement.

A review of the file indicates that no IDS was submitted to cause the new grounds of rejection and that the amendment filed on April 22, 2009 does not change the scope of the claims and therefore does not justify the new grounds of rejection. Therefore, the finality of the June 25, 2009 Office action is hereby withdrawn.

Accordingly, the petition is **GRANTED.**

Any inquiry concerning this decision should be directed to Hassan Kizou at (571) 272-3088.

Valencia Martin Wallace
Director
Technology Center 2400

UNITED STATES PATENT AND TRADEMARK OFFICE

COMMISSIONER FOR PATENTS
UNITED STATES PATENT AND TRADEMARK OFFICE
P.O. BOX 1450
ALEXANDRIA, VA 22313-1450
www.uspto.gov

Paper No.

SUGHRUE MION, PLLC
2100 PENNSYLVANIA AVENUE,
N.W.
SUITE 800
WASHINGTON DC 20037

COPY MAILED
JUN 25 2007
OFFICE OF PETITIONS

In re: Murata et al.	:	
Patent No. 7,094,520	:	
Issue Date: August 22, 2006	:	DECISION ON REQUEST FOR
Application No. 10/389,939	:	RECONSIDERATION OF
Filed: March 18, 2003	:	PATENT TERM ADJUSTMENT
Attorney Docket No. Q74656	:	

This is a decision on the "REQUEST FOR RECONSIDERATION OF PATENT TERM ADJUSTMENT UNDER 37 C.F.R. § 1.705(d)," filed October 20, 2006. Patentee requests that the patent term adjustment indicated in the patent be corrected from twenty-two (22) days to thirty-two (32) days.

The request for reconsideration of patent term adjustment is **GRANTED**.

The patent term adjustment indicated in the patent is to be corrected by issuance of a certificate of correction showing a revised Patent Term Adjustment of thirty-two (32) days.

On August 22, 2006, the application matured into U.S. Patent No. 7,094,520 with a revised patent term adjustment of 0 days. On October 20, 2006, patentee timely submitted this request for reconsideration of patent term adjustment (with required fee), asserting that the correct number of days of Patent Term Adjustment is 32 days. Patentee disputes the reduction of 106

to the Examiner … to the date the drawings were finished[1]." Patentee is incorrect regarding the basis for entry of the period of reduction of 106 days. It is noted that the period of reduction of 106 days was entered, pursuant to 37 CFR 1.704(c)(10), for the filing of drawings after the mailing of the notice of allowance (i.e., beginning on May 9, 2006 and ending on August 22, 2006). Nonetheless, the reduction is not warranted. The electronic record has been reviewed, and no drawings were in fact filed by patentee after the mailing of the notice. The drawings of May 9, 2006 are merely a clean copy of those that were filed with the application on March 18, 2003.

- The application was filed on March 18, 2003, and a first Office action was not mailed until August 11, 2004. Since this exceeds 14 months from the actual filing date of the application, this constitutes 85 days of Office delay.
- The final rejection was mailed on January 25, 2005 and a Request for Continued Examination was not filed until June 14, 2005. Since this exceeds 3 months from the mailing date of the final rejection, this constitutes 50 days of Applicant delay.
- Another non-final rejection was mailed on July 26, 2005, and a response was not received until November 8, 2005. Since this exceeds 3 months from the mailing date of the non-final rejection, this constitutes 13 days of Applicant delay.
- The issue fee was received on April 12, 2006, and the patent issued on August 22, 2006. Since this exceeds 4 months from the payment of the issue fee, this constitutes 10 days of Office delay.

As such, the total PTA equals (85 plus 10) minus (50 plus 13), which equals **32** days.

In view thereof, the patent should have issued with a patent term adjustment of thirty-two (32) days.

Receipt of the $200.00 fee set forth in 37 CFR 1.18(e) is acknowledged. No additional fees are required.

The application file is being forwarded to the Certificates of Correction Branch for issuance of a certificate of correction in order to rectify this error. The Office will issue a

1 Petition, page 2.

certificate of correction indicating that the term of the above-identified patent is extended or adjusted by THIRTY-TWO (32) days.

Telephone inquiries specific to this matter should be directed to Senior Attorney Paul Shanoski at (571) 272-3225.

Nancy Johnson
Senior Petitions Attorney
Office of Petitions

Enclosure: Copy of DRAFT Certificate of Correction

UNITED STATES PATENT AND TRADEMARK OFFICE

DRAFT CERTIFICATE OF CORRECTION

PATENT : 7,094,520 B2

DATED : August 22, 2006

INVENTOR(S) : Murata et al.

DRAFT

It is certified that error appears in the above-identified patent and that said Letters Patent is hereby corrected as shown below:

On the cover page,

[*] Notice: Subject to any disclaimer, the term of this patent is extended or adjusted under 35 USC 154(b) by (0) days

Delete the phrase "by 0" and insert – by 32 days--

UNITED STATES PATENT AND TRADEMARK OFFICE

Commissioner for Patents
United States Patent and Trademark Office
P.O. Box 1450
Alexandria, VA 22313-1450
www.uspto.gov

Hsueh Chin Chang
P.O. Box 63-150
Taichung City TW TAIWAN

COPY MAILED

JAN 27 2006

OFFICE OF PETITIONS

ON PETITION

In re Application of :
Chang :
Application No. 10/389,946 :
Filed: March 18, 2003 :
Title: Structure of Spanner Handle :

This is a decision on the petition under 37 CFR 1.181 to withdraw the holding of abandonment, filed October 18, 2005.

The petition to withdraw the holding of abandonment is **Dismissed**.

This above-identified application became abandoned for failure to timely file a complete reply to the non-final Office Action of November 3, 2004. An amendment was filed on December 7, 2004. In response to the amendment a Notice of Non-Compliant Amendment (37 CFR 1.121) was mailed on December 17, 2004 which set an extendable reply period of one month. A reply to the Notice of Non-Compliant Amendment was not received. This application became abandoned on January 18, 2005. A Notice of Abandonment was mailed on September 22, 2005.

Petitioner argues a response to the November 3, 2004 non-final Office action was mailed on December 3, 2004 and received in the Office on December 7, 2004. Petitioner has provided evidence of the receipt of the December 7, 2004 amendment. Petitioner acknowledges receipt of the Notice of Abandonment.

Petitioner's argument has been considered but it is not convincing to establish the holding of abandonment should be withdrawn. Petitioner has failed to provide any evidence that a response to the Notice of Non-Compliant Amendment was ever submitted.

To the extent the Notice of Non-Compliant Amendment was not received petitioner has failed to provide any evidence. A review of the record indicates no irregularity in the mailing of the Notice, and in the absence of any irregularity in the mailing, there is a strong presumption that the Office action was properly mailed to the address of record. This presumption may be overcome by a showing that the Notice was not in fact received. The showing required to establish the failure to receive an Office communication must include a statement from the practitioner stating that the Office communication was not received by the practitioner and attesting to the fact that a

search of the file jacket and docket records indicates that the Office communication was not received. A copy of the docket record where the non-received Office communication would have been entered had it been received and docketed must be attached to and referenced in practitioner's statement.[1] The showing outlined above may not be sufficient if there are circumstances that point to a conclusion that the Notice of Non-Compliant Amendment may have been lost after receipt rather than a conclusion that the Notice of Non-Compliant Amendment was lost in the mail.

Petitioner may wish to file a petition to revive under 37 CFR 1.137(b).

The address provided on the petition differs from the correspondence address of record. If petitioner desires to receive correspondence at the address provided on the petition a change of correspondence address should be provided. Until such time, all correspondence will continue to be mailed to the correspondence address of record. A courtesy copy of this decision is being forwarded to the address on the petition.

Further correspondence with respect to this matter should be addressed as follows:

By mail:	Mail Stop Petition Commissioner for Patents P.O. Box 1450 Alexandria, VA 22313-1450
By facsimile:	(571) 273-8300
By delivery service: (FedEx, UPS, DHL, etc.)	U.S. Patent and Trademark Office Customer Service Window, Randolph Building 401 Dulany Street Alexandria, VA 22314

Telephone inquiries concerning this matter should be directed to the undersigned at (571) 272-3215.

Charlema R. Grant
Petitions Attorney
Office of Petitions

enclosure

cc: 5F-2, No. 212, Sec 1
Wunsin Rd
Taichung City, Taiwan

---

[1] M.P.E.P. § 711.03(c); See Notice entitled "Withdrawing the Holding of Abandonment When Office Actions Are Not Received," 1156 O.G. 53 (November 16, 1993).

UNITED STATES PATENT AND TRADEMARK OFFICE

COMMISSIONER FOR PATENTS
UNITED STATES PATENT AND TRADEMARK OFFICE
P.O. BOX 1450
ALEXANDRIA, VA 22313-1450
www.uspto.gov

Paper No. 4

COPY MAILED

SEP 04 2003

OFFICE OF PETITIONS

PENNIE & EDMONDS LLP
1667 K STREET, N.W.
WASHINGTON, DC 20006

In re Application of
Sgroi, Jr. et al
Application No. 10/389,975
Filed: March 18, 2003
Attorney Docket No. 618-1141-999

ON PETITION

This decision concerns the August 11, 2003 "Petition in Response to Notice of Omitted Item(s)," requesting that the "Notice to File Missing Parts of Nonprovisional Application" mailed on June 10, 2003 ("6/10/03 Notice") for the above-referenced application be withdrawn to the extent that it refers to an omitted page of the specification.

The petition is **GRANTED**.

On March 18, 2003, the application was filed. The Office of Initial Patent Examination (OIPE) mailed the 6/10/03 Notice, stating that the application had been accorded a filing date of March 18, 2003, but that page 1 of the specification appeared to have been omitted.

The instant petition then followed, asserting that page 1 was filed along with the remaining pages of the specification on March 18, 2003. In support, the petition is accompanied by a copy of a postcard receipt, indicating receipt by the USPTO on March 18, 2003 of, *inter alia*, 57 pages of specification for this application. The petition also encloses a copy of the application allegedly filed on March 18, 2003.

The file for this application includes pages 2-57 of the specification, totaling 56 pages, but not a page 1. Pages 46-56 contain the claims, while the abstract is on page 57. The application in the file, but for a missing page 1 of the specification, is identical to that submitted with the petition.

In view of the above, the Office concludes that 57 pages of specification, including a page 1, were filed on March 18, 2003 on this application. Page 1 apparently was lost after receipt in the USPTO, and is entitled to the same March 18, 2003 filing date as the remainder of the application.

The 6/10/03 Notice is hereby vacated as it pertains to page 1 of the specification.

The petition is thus granted.

The $130 charge made on Deposit Account No. 16-1150 on August 12, 2003 has been refunded.

The application is being returned to OIPE for further processing with a filing date of March 18, 2003, using the specification filed on that date and supplemented by the page 1 submitted with the instant petition.

Telephone inquiries should be directed to Petitions Attorney RC Tang at (703) 308-0763.

Beverly M. Flanagan
Supervisory Petitions Attorney
Office of Petitions

UNITED STATES PATENT AND TRADEMARK OFFICE

Commissioner for Patents
United States Patent and Trademark Office
P.O. Box 1450
Alexandria, VA 22313-1450
www.uspto.gov

C. IRVIN MCCLELLAND
OBLON, SPIVAK, MCCLELLAND, MAIER & NEUSTADT, P.C.
1940 DUKE STREET
ALEXANDRIA, VA 22314

COPY MAILED
NOV 1 3 2006
OFFICE OF PETITIONS

In re Patent No. 7,001,945	:	
Issue Date: February 21, 2006	:	
Application No. 10/389,988	:	ON PETITION
Filed: March 18, 2003	:	
Patentee(s): Akio Nodera, et. al.	:	

This is a decision on the petition under 37 CFR 1.183, filed on June 9, 2006, which is being treated as a petition under 37 CFR 3.81[1], to correct the name of the assignee on the front page of the above-identified patent by way of a Certificate of Correction.

The petition is **GRANTED**.

Finance records show that petitioner authorized the Office to charge $400 for treatment of the instant petition. However, since a petition under 37 CFR 3.81 requires a $130 processing fee, the overpayment of $270 will be credited back to petitioner, in due course.

The patent file is being forwarded to the Certificates of Correction Branch for issuance of the requested Certificate of Correction.

Telephone inquiries concerning this decision may be directed to the undersigned at (571) 272-3226. Inquiries regarding the issuance of a certificate of correction should be directed to the Certificates of Correction Branch at (703) 305-8309.

Andrea Smith
Petitions Examiner
Office of Petitions

[1] *See Official Gazette of June 22, 2004*

UNITED STATES PATENT AND TRADEMARK OFFICE

COMMISSIONER FOR PATENTS
UNITED STATES PATENT AND TRADEMARK OFFICE
P.O. BOX 1450
ALEXANDRIA, VA 22313-1450
www.uspto.gov

JACK Q. LEVER, JR.
MCDERMOTT, WILL & EMERY
600 THIRTEENTH STREET, N.W.
WASHINGTON, DC 20005-3096

COPY MAILED

JUN 27 2005

OFFICE OF PETITIONS

ON PETITION

In re Application of :
Masahiko Nishimoto, et al. :
Application No. 10/390,011 :
Filed: March 18, 2003 :
Attorney Docket No. 60188-311 :

This is a decision on the petition, filed June 24, 2005, under 37 CFR 1.313(c)(2) to withdraw the above-identified application from issue after payment of the issue fee.

The petition is **GRANTED**.

The above-identified application is withdrawn from issue for consideration of a submission under 37 CFR 1.114 (request for continued examination). See 37 CFR 1.313(c)(2).

Petitioner is advised that the issue fee paid on April 18, 2005, in the above-identified application, cannot be refunded. If, however, the above-identified application is again allowed, petitioner may request that it be applied towards the issue fee required by the new Notice of Allowance.[1]

Telephone inquiries relating to this decision should be directed to the undersigned at (571) 272-3204.

The application is being referred to Technology Center AU 2878 for further processing of the request for continued examination under 37 CFR 1.114.

Sherry D. Brinkley
Petitions Examiner
Office of Petitions

[1]The request to apply the issue fee to the new Notice may be satisfied by completing and returning the new Issue Fee Transmittal Form PTOL-85(b), which includes the following language thereon: "Commissioner for Patents is requested to apply the Issue Fee and Publication Fee (if any) or re-apply any previously paid issue fee to the application identified above." Petitioner is advised that, whether a fee is indicated as being due or not, the Issue Fee Transmittal Form must be completed and timely submitted to avoid abandonment. Note the language in bold text on the first page of the Notice of Allowance and Fee(s) Due (PTOL-85).

UNITED STATES PATENT AND TRADEMARK OFFICE

Commissioner for Patents
United States Patent and Trademark Office
P.O. Box 1450
Alexandria, VA 22313-1450
www.uspto.gov

COPY MAILED

AUG 1 6 2004

OFFICE OF PETITIONS

ERIC ROBINSON
PMB 955
21010 SOUTHBANK ST.
POTOMAC FALLS VA 20165

In re Application of	:	
Shunpei Yamazaki et al	:	
Application No. 10/390,014	:	ON PETITION
Filed: March 18, 2003	:	
Attorney Docket No. 0756-7124	:	

This is a decision on the petition, filed August 16, 2004, under 37 CFR 1.313(c)(2) to withdraw the above-identified application from issue after payment of the issue fee.

The petition is **GRANTED**.

The above-identified application is withdrawn from issue for consideration of a submission under 37 CFR 1.114 (request for continued examination). See 37 CFR 1.313(c)(2).

Petitioner is advised that the issue fee paid on April 21, 2004 in the above-identified application cannot be refunded. If, however, the above-identified application is again allowed, petitioner may request that it be applied towards the issue fee required by the new Notice of Allowance.[1]

Telephone inquiries should be directed to the undersigned at (703) 305-8859.

The examiner of Technology Center AU 2815 will consider the request for continued examination under 37 CFR 1.114.

Karen Creasy

Karen Creasy
Petitions Examiner
Office of Petitions
Office of the Deputy Commissioner
for Patent Examination Policy

---

[1] The request to apply the issue fee to the new Notice may be satisfied by completing and returning the new Issue Fee Transmittal Form PTOL-85(b), which includes the following language thereon: "Commissioner for Patents is requested to apply the Issue Fee and Publication Fee (if any) or re-apply any previously paid issue fee to the application identified above." Petitioner is advised that, whether a fee is indicated as being due or not, the Issue Fee Transmittal Form **must** be completed and timely submitted to avoid abandonment. Note the language in bold text on the first page of the Notice of Allowance and Fee(s) Due (PTOL-85).

UNITED STATES PATENT AND TRADEMARK OFFICE

Commissioner for Patents
United States Patent and Trademark Office
P.O. Box 1450
Alexandria, VA 22313-1450
www.uspto.gov

JJGJR.: 07-06

Paper No: __

COPY MAILED

JUL 1 0 2006

OFFICE OF PETITIONS

MCDERMOTT,
WILL & EMERY
600 13TH STREET, N.W.
WASHINGTON DC 20005-3096

In re Application of	:	
Zhang	:	
Application No. 10/390,019	:	DECISION
Filing Date: 18 March, 2003	:	
Attorney Docket No.: 50103-498	:	

This is a decision on the petition filed on 9 May, 2006, alleging unintentional delay under 37 C.F.R. §1.137(b).

For the reasons set forth below, the petition under 37 C.F.R.§1.137(b) is **GRANTED**.

BACKGROUND

The record reflects that:

- Petitioner failed to reply timely and properly to the non-final Office action mailed on 19 September, 2005, with reply due absent extension of time on or before 19 December, 2005;
- the instant application went abandoned after midnight 19 December, 2005;
- the Office mailed the Notice of Abandonment on 6 April, 2006;
- on 9 May, 2006, Petitioner filed the instant petition (with fee), with the reply in the form

of an amendment, and made the statement of unintentional delay–thus Petitioner appears to have satisfied the requirements under 37 C.F.R. §1.137(b);

- out of an abundance of caution, Petitioners always are reminded that those registered to practice *and* all others who make representations before the Office are reminded to inquire into the underlying facts of representations made to the Office and support averments with the appropriate documentation–since all owe to the Office the continuing duty to disclose.[1]

---

[1] See supplement of 17 June, 1999. The Patent and Trademark Office is relying on petitioner's duty of candor and good faith and accepting a statement made by Petitioner. See Changes to Patent Practice and Procedure, 62 Fed. Reg. at 53160 and 53178, 1203 Off. Gaz. Pat. Office at 88 and 103 (responses to comments 64 and 109)(applicant obligated under 37 C.F.R. §10.18 to inquire into the underlying facts and circumstances when providing statements to the Patent and Trademark Office).

Specifically, the regulations at 37 C.F.R. §10.18 provide:

§ 10.18 Signature and certificate for correspondence filed in the Patent and Trademark Office.
(a) For all documents filed in the Office in patent, trademark, and other non-patent matters, except for correspondence that is required to be signed by the applicant or party, each piece of correspondence filed by a practitioner in the Patent and Trademark Office must bear a signature by such practitioner complying with the provisions of §1.4(d), §1.4(e), or § 2.193(c)(1) of this chapter.
(b) By presenting to the Office (whether by signing, filing, submitting, or later advocating) any paper, the party presenting such paper, whether a practitioner or non-practitioner, is certifying that—

(1) All statements made therein of the party's own knowledge are true, all statements made therein on information and belief are believed to be true, and all statements made therein are made with the knowledge that whoever, in any matter within the jurisdiction of the Patent and Trademark Office, knowingly and willfully falsifies, conceals, or covers up by any trick, scheme, or device a material fact, or makes any false, fictitious or fraudulent statements or representations, or makes or uses any false writing or document knowing the same to contain any false, fictitious or fraudulent statement or entry, shall be subject to the penalties set forth under 18 U.S.C. 1001, and that violations of this paragraph may jeopardize the validity of the application or document, or the validity or enforceability of any patent, trademark registration, or certificate resulting therefrom; and

(2) To the best of the party's knowledge, information and belief, formed after an inquiry reasonable under the circumstances, that —

(i) The paper is not being presented for any improper purpose, such as to harass someone or to cause unnecessary delay or needless increase in the cost of prosecution before the Office;

(ii) The claims and other legal contentions therein are warranted by existing law or by a nonfrivolous argument for the extension, modification, or reversal of existing law or the establishment of new law;

(iii) The allegations and other factual contentions have evidentiary support or, if specifically so identified, are likely to have evidentiary support after a reasonable opportunity for further investigation or discovery; and

(iv) The denials of factual contentions are warranted on the evidence, or if specifically so identified, are reasonably based on a lack of information or belief.

(c) Violations of paragraph (b)(1) of this section by a practitioner or non-practitioner may jeopardize the validity of the application or document, or the validity or enforceability of any patent, trademark registration, or certificate resulting therefrom. Violations of any of paragraphs (b)(2)(i) through (iv) of this section are, after notice and reasonable opportunity to respond, subject to such sanctions as deemed appropriate by the Commissioner, or the Commissioner's designee, which may include, but are not limited to, any combination of —

(1) Holding certain facts to have been established;
(2) Returning papers;
(3) Precluding a party from filing a paper, or presenting or contesting an issue;
(4) Imposing a monetary sanction;
(5) Requiring a terminal disclaimer for the period of the delay; or
(6) Terminating the proceedings in the Patent and Trademark Office.

(d) Any practitioner violating the provisions of this section may also be subject to disciplinary action. See § 10.23(c)(15).
[Added 50 FR 5175, Feb. 6, 1985, effective Mar. 8, 1985; para. (a) revised, 58 FR 54494, Oct. 22, 1993, effective Nov. 22, 1993; paras. (a) & (b) revised, paras. (c) & (d) added, 62 FR 53131, Oct. 10, 1997, effective Dec. 1, 1997; para. (a) revised, 69 FR 56481, Sept. 21, 2004, effective Oct. 21, 2004]

STATUTES, REGULATIONS AND ANALYSIS

Congress has authorized the Commissioner to "revive an application if the delay is shown to the satisfaction of the Commissioner to have been "unavoidable." 35 U.S.C. §133 (1994).[2]

The regulations at 37 C.F.R. §1.137(a) and (b) set forth the requirements for a petitioner to revive a previously unavoidably or unintentionally, respectively, abandoned application under this congressional grant of authority. The language of 35 U.S.C. §133 and 37 C.F.R. §1.137(a) is clear, unambiguous, and without qualification: the delay in tendering the reply to the outstanding Office action, as well as filing the first petition seeking revival, must have been unavoidable for the reply now to be accepted on petition.[3]

Delays in responding properly raise the question whether delays are unavoidable.[4] Where there is a question whether the delay was unavoidable, Petitioners must meet the burden of establishing that the delay was unavoidable within the meaning of 35 U.S.C. §133 and 37 C.F.R. §1.137(a).[5] And the Petitioner must be diligent in attending to the matter.[6] Failure to do so does not constitute the care required under Pratt, and so cannot satisfy the test for diligence and due care.

(By contrast, unintentional delays are those that do not satisfy the very strict statutory and regulatory requirements of unavoidable delay, and also, by definition, are not intentional.[7]))

As to the Allegations of Unintentional Delay

The requirements for a grantable petition under 37 C.F.R. §1.137(b) are the petition and fee, a

---

[2] 35 U.S.C. §133 provides:
35 U.S.C. §133 Time for prosecuting application.
Upon failure of the applicant to prosecute the application within six months after any action therein, of which notice has been given or mailed to the applicant, or within such shorter time, not less than thirty days, as fixed by the Commissioner in such action, the application shall be regarded as abandoned by the parties thereto, unless it be shown to the satisfaction of the Commissioner that such delay was unavoidable.

[3] Therefore, by example, an unavoidable delay in the payment of the Filing Fee might occur if a reply is shipped by the US Postal Service, but due to catastrophic accident, the delivery is not made.

[4] See: *Changes to Patent Practice and Procedure*; *Final Rule Notice*, 62 *Fed. Reg.* at 53158-59 (October 10, 1997), 1203 *Off. Gaz. Pat. Office* at 86-87 (October 21, 1997).

[5] See: In re Application of G, 11 USPQ2d 1378, 1380 (Comm'r Pats. 1989).

[6] See: Diligence in Filing Petitions to Revive and Petitions to Withdraw the Holding of Abandonment, 1124 Off. Gaz. Pat. Office 33 (March 19, 1991). It was and is Petitioner's burden to exercise diligence in seeking either to have the holding of abandonment withdrawn or the application revived. See 1124 Off. Gaz. Pat. Office supra.

[7] Therefore, by example, an unintentional delay in the reply might occur if the reply and transmittal form are to be prepared for shipment by the US Postal Service, but other pressing matters distract one's attention and the mail is not timely deposited for shipment.

statement/showing of unintentional delay, a proper reply, and–where appropriate--a terminal disclaimer and fee.

Petitioner appears to have satisfied the regulatory requirements.

CONCLUSION

The petition under 37 C.F.R. §1.137(b) hereby is **granted**.

The instant application is released to the Examiner in Technology Center 2100 for further processing in due course.

Telephone inquiries concerning this decision may be directed to the undersigned at (571) 272-3214.

John J. Gillon, Jr.
Senior Attorney
Office of Petitions

UNITED STATES PATENT AND TRADEMARK OFFICE

Commissioner for Patents
United States Patent and Trademark Office
P.O. Box 1450
Alexandria, VA 22313-1450
www.uspto.gov

JAN 1 1 2010

KRATZ, QUITOS & HANSON, LLP
1420 K Street, N.W.
Suite 400
WASHINGTON DC 20005

In re Application of: Junichi IIJIMA	: DECISION ON PETITION
Appl. No. 10/390,021	: UNDER 37 C.F.R 1.181
Filed: March 18, 2003	: ON FOREIGN PRIORITY
For: STORE SYSTEM	:

This is a decision on applicant's petition under 37 CFR 1.181 filed on October 9, 2008 requesting acknowledgment of a claim for foreign priority and acknowledgment of receipt of a certified copy of the priority document.

The petition is **DISMISSED as MOOT.**

Applicant alleges that the examiner did not explicitly acknowledge the claim for foreign priority or the receipt of the certified copy of the International PCT Application No. PCT/JP00/06388 in the Notice of Allowance or in any other Office actions.

A review of the file record reveals that a claim for priority was received by the U.S. Patent and Trademark of Office on April 18, 2003 requesting benefit of the filing date of International PCT application No. PCT/JP00/06388, filed September 19, 2000. A certified copy of International PCT Application No. PCT/JP00/06388 was received by the U.S. Patent and Trademark Office on April 18, 2003.

A further review of the file history indicates that the examiner did not explicitly acknowledge the claim for foreign priority or the receipt of the certified copy of the International PCT Application No. PCT/JP00/06388 in the Notice of Allowance nor in any Office action prior to the Notice of Allowance. However, in the miscellaneous communication to applicant mailed March 9, 2009, the examiner did acknowledge the claim for foreign priority and receipt of the certified copy of the International PCT Application No. PCT/JP00/06388.

In view of the foregoing facts, the petition is moot and thereby dismissed.

Any questions regarding this decision should be directed to Supervisory Patent Examiner F. Ryan Zeender at (571) 272-6790.

Wynn Coggins, Director
Patent Technology Center 3600
(571) 272-5350

fz/lm: 12/23/2009
LM

UNITED STATES PATENT AND TRADEMARK OFFICE

Commissioner for Patents
United States Patent and Trademark Office
P.O. Box 1450
Alexandria, VA 22313-1450
www.uspto.gov

In re Application of YANG, TAI-HER	
Appl. No.: 10/390,034	**WITHDRAWAL FROM ISSUE**
Filed: March 18, 2003	*37 CFR 1.313*
For: MULTI-BATTERY AUTOMATIC CHARGING CIRCUIT WITH INDIVIDUAL REGULATOR	
	SEP - 1 2004

The purpose of this communication is to inform you that the above-identified application is being withdrawn from issue after payment of the issue fee due to the unpatentability of one or more claims. See 37 CFR 1.313(b)(3).

The issue fee is refundable upon request. If, however, the application is again found allowable, the issue fee can be applied toward payment of the issue fee in the amount identified on the new Notice of Allowance and Issue Fee Due upon written request. This request and any balance due must be received on or before the due date noted in the new Notice of Allowance and Issue Fee Due in order to prevent abandonment of the application.

Telephone inquiries should be directed to Michael Sherry, Supervisory Patent Examiner, at (571) 272-2084.

The application is being forwarded to the examiner for action.

Richard K. Seidel
Director
Patent Examining Technology Center 2800

RABIN & BERDO, P.C.
1101 14th Street, N.W., Suite 500
Washington, DC 20005

SPE RESPONSE FOR CERTIFICATE OF CORRECTION

Paper No.: _____

DATE : November 3, 2006

TO SPE OF : ART UNIT 3744

SUBJECT : Request for Certificate of Correction for Appl. No.: 10/390051 patent No.: 7,100,386

Please respond to this request for a certificate of correction within 7 days.

Please review the requested changes/corrections as shown in the **COCIN** document(s) in the IFW application image. No new matter should be introduced, nor should the scope or meaning of the claims be changed.

Please complete the response (see below) and forward the completed response to scanning using document code **COCX**.

Magdalene Talley

Certificates of Correction Branch

703-308-9390 ext. 116

Thank You For Your Assistance

The request for issuing the above-identified correction(s) is hereby:

Note your decision on the appropriate box.

- ☑ **Approved** — **All** changes apply.
- ☐ **Approved in Part** — Specify below which changes **do not** apply.
- ☐ **Denied** — State the reasons for denial below.

Comments: _____

Cheryl J. [illegible]

SPE

3744

Art Unit

UNITED STATES PATENT AND TRADEMARK OFFICE

COMMISSIONER FOR PATENTS
UNITED STATES PATENT AND TRADEMARK OFFICE
P.O. BOX 1450
ALEXANDRIA, VA 22313-1450
www.uspto.gov

Paper No.

G. VICTOR TREYZ
FLOOD BUILDING
870 MARKET STREET, SUITE 984
SAN FRANCISCO CA 94102

COPY MAILED

SEP 12 2008

OFFICE OF PETITIONS

In re Application of	:	
Appenzeller et al.	:	
Application No. 10/390,058	:	DECISION ON
Filed: March 14, 2003	:	PETITION
Attorney Docket No. ID-4	:	

This is a decision on the PETITION UNDER 37 C.F.R. §1.181 TO WITHDRAW HOLDING OF ABANDONMENT filed April 25, 2008.

The above-identified application became abandoned for failure to pay the Issue Fee and Publication Fee within three months of the mailing date, December 19, 2007, of the Notice of Allowance and Fee(s) Due. This Office action set a three-month nonextendable statutory period for reply. No reply having been received, the above-identified application became abandoned on March 20, 2008. A courtesy Notice of Abandonment was mailed on April 14, 2008.

On petition, the attorney of record states that a change of correspondence address was filed on September 20, 2007. However, as a result of the Office's mailing of the Notice of Allowance to the incorrect correspondence address, the undersigned never received the Notice of Allowance and was not able to timely pay the issue and publication fee.

A review of the record confirms that a change of correspondence address was filed on September 24, 2007. The change of correspondence address was properly filed by an attorney of record, but not made of record by the Office. Accordingly, the Notice of Allowance mailed December 19, 2007 was mailed to the old uncorrected address. Under the circumstances, withdrawal of the holding of abandonment is warranted.

In view thereof, the notice of abandonment mailed April 14, 2008 and the holding of abandonment are hereby **WITHDRAWN**.

The petition under § 1.181 is **GRANTED**.

No fee is required on petition under § 1.181.

The change of correspondence address has been made of record.

Technology Center AU 2136 has been advised of this decision. The application file is, thereby, forwarded to the Technology Center's technical support staff to withdraw the holding of abandonment and for re-mailing of the Notice of Allowance and Fee(s) Due (and Notice of Allowability) mailed December 19, 2007 and for restarting of the period for reply.

Telephone inquiries related to this decision should be directed to the undersigned at (571) 272-3219.

Nancy Johnson

Nancy Johnson
Senior Petitions Attorney
Office of Petitions

UNITED STATES PATENT AND TRADEMARK OFFICE

UNITED STATES DEPARTMENT OF COMMERCE
United States Patent and Trademark Office
Address: COMMISSIONER FOR PATENTS
P.O. Box 1450
Alexandria, Virginia 22313-1450
www.uspto.gov

KNOBBE MARTENS OLSON & BEAR LLP
2040 MAIN STREET
FOURTEENTH FLOOR
IRVINE, CA 92614

Mail Date: 04/20/2010

Applicant	: Matthew J. Round	: DECISION ON REQUEST FOR
Patent Number	: 7624047	: RECALCULATION of PATENT
Issue Date	: 11/24/2009	: TERM ADJUSTMENT IN VIEW
Appliction No	: 10/390,067	: OF WYETH AND NOTICE OF INTENT TO
Filed	: 03/14/2003	: ISSUE CERTIFICATE OF CORRECTION
		:

The Request for Recalculation is **GRANTED** to the extent indicated.

The patent term adjustment has been determined to be **1385** days. The USPTO will *sua sponte* issue a certificate of correction reflecting the amount of PTA days determined by the recalculation.

Prior to the issuance of the certificate of correction, the USPTO will afford patentee an opportunity to be heard and request reconsideration. Accordingly, patentee has **one month or thirty (30) days**, whichever is longer, to file a request for reconsideration of this patent term adjustment calculation. See 35 U.S.C. 154(b)(3)(B)(ii) and 37 CFR 1.322(a)(4). No extensions of time will be granted under 37 CFR 1.136.

Patentee should use document code PET.OP if electronically filing a request for reconsideration of this patent term adjustment calculation. The patentee must also include the information required by 37 CFR 1.705(b)(2) and the fee required by 37 CFR 1.18(e). If patentee does not file a timely request for reconsideration of this patent term adjustment calculation including the information required by 37 CFR 1.705(b)(2) and the fee required by 37 CFR 1.18(e), the USPTO will issue a certificate of correction reflecting the PTA determination noted above.

Patentee should be aware that in order to preserve the right to review in the United States District Court for the District of Columbia of the USPTO patent term adjustment determination, patentee must ensure that he or she also take the steps required under 35 U.S.C. 154(b)(4)(A) in a timely manner. Nothing in the request for recalculation should be construed as providing an alternative time frame for commencing a civil action under 35 U.S.C. 154(b)(4)(A).

Any questions concerning this decision should be directed to the Office of Patent Legal Administration at 571-272-7702.

UNITED STATES PATENT AND TRADEMARK OFFICE

UNITED STATES DEPARTMENT OF COMMERCE
United States Patent and Trademark Office
Address: COMMISSIONER FOR PATENTS
P.O. Box 1450
Alexandria, Virginia 22313-1450
www.uspto.gov

COATS & BENNETT, PLLC
1400 Crescent Green, Suite 300
Cary, NC 27518

Mail Date: 04/21/2010

Applicant	: John C. Griffin	: DECISION ON REQUEST FOR
Patent Number	: 7603791	: RECALCULATION of PATENT
Issue Date	: 10/20/2009	: TERM ADJUSTMENT IN VIEW
Appliction No	: 10/390,074	: OF WYETH AND NOTICE OF INTENT TO
Filed	: 03/17/2003	: ISSUE CERTIFICATE OF CORRECTION
		:

The Request for Recalculation is **GRANTED** to the extent indicated.

The patent term adjustment has been determined to be **1180** days. The USPTO will *sua sponte* issue a certificate of correction reflecting the amount of PTA days determined by the recalculation.

Prior to the issuance of the certificate of correction, the USPTO will afford patentee an opportunity to be heard and request reconsideration. Accordingly, patentee has **one month or thirty (30) days**, whichever is longer, to file a request for reconsideration of this patent term adjustment calculation. See 35 U.S.C. 154(b)(3)(B)(ii) and 37 CFR 1.322(a)(4). No extensions of time will be granted under 37 CFR 1.136.

Patentee should use document code PET.OP if electronically filing a request for reconsideration of this patent term adjustment calculation. The patentee must also include the information required by 37 CFR 1.705(b)(2) and the fee required by 37 CFR 1.18(e). If patentee does not file a timely request for reconsideration of this patent term adjustment calculation including the information required by 37 CFR 1.705(b)(2) and the fee required by 37 CFR 1.18(e), the USPTO will issue a certificate of correction reflecting the PTA determination noted above.

Patentee should be aware that in order to preserve the right to review in the United States District Court for the District of Columbia of the USPTO patent term adjustment determination, patentee must ensure that he or she also take the steps required under 35 U.S.C. 154(b)(4)(A) in a timely manner. Nothing in the request for recalculation should be construed as providing an alternative time frame for commencing a civil action under 35 U.S.C. 154(b)(4)(A).

Any questions concerning this decision should be directed to the Office of Patent Legal Administration at 571-272-7702.

UNITED STATES PATENT AND TRADEMARK OFFICE

COMMISSIONER FOR PATENTS
UNITED STATES PATENT AND TRADEMARK OFFICE
P.O. BOX 1450
ALEXANDRIA, VA 22313-1450
www.uspto.gov

Larry B. Guernsey, Esq.
Intellectual Property Law Offices
Suite 660
1901 S. Bascom Avenue
Campbell, CA 95008

COPY MAILED
AUG 29 2006
OFFICE OF PETITIONS

In re Application of	:	
Eric C. Reimers	:	
Application No. 10/390,089	:	ON PETITION
Filed: March 14, 2003	:	
Attorney Docket No. 60514-302901	:	

This is a decision on the petition under 37 CFR 1.137(b), filed by facsimile transmission on July 21, 2006, to revive the above-identified application.

The application became abandoned for failure to timely respond to the Notice of Allowance and Fee(s) Due mailed February 28, 2006. A Notice of Abandonment was mailed on July 5, 2006.

The petition satisfies the requirements of 37 CFR 1.137(b) in that petitioner has supplied (1) the reply in the form of $700 for payment of the issue fee and $300 for payment of the publication fee; (2) the petition fee of $750; and (3) an adequate statement of unintentional delay. Therefore, the petition is **GRANTED**.

The Office acknowledges receipt of $30 for ten (10) advance order soft copies, paid on March 7, 2006.

There is no indication that petitioner has submitted a Part B - Fee(s) Transmittal Form (PTOL-85b). Accordingly, if petitioner desires to have the information normally found thereon printed on the patent, the attached blank Part B - Fee(s) Transmittal Form should be completed and returned to the Office of Publications within **ONE MONTH** from the mail date of this decision.

This application file is being referred to the Office of Publications to be processed into a patent.

Telephone inquiries concerning this decision should be directed to the undersigned at (571) 272-3226.

Andrea Smith
Petitions Examiner
Office of Petitions

Enclosure: Blank Part B - Fee(s) Transmittal Form (PTOL-85b)

Privacy Act Statement

The **Privacy Act of 1974 (P.L. 93-579)** requires that you be given certain information in connection with your submission of the attached form related to a patent application or patent. Accordingly, pursuant to the requirements of the Act, please be advised that: (1) the general authority for the collection of this information is 35 U.S.C. 2(b)(2); (2) furnishing of the information solicited is voluntary; and (3) the principal purpose for which the information is used by the U.S. Patent and Trademark Office is to process and/or examine your submission related to a patent application or patent. If you do not furnish the requested information, the U.S. Patent and Trademark Office may not be able to process and/or examine your submission, which may result in termination of proceedings or abandonment of the application or expiration of the patent.

The information provided by you in this form will be subject to the following routine uses:

1. The information on this form will be treated confidentially to the extent allowed under the Freedom of Information Act (5 U.S.C. 552) and the Privacy Act (5 U.S.C 552a). Records from this system of records may be disclosed to the Department of Justice to determine whether disclosure of these records is required by the Freedom of Information Act.
2. A record from this system of records may be disclosed, as a routine use, in the course of presenting evidence to a court, magistrate, or administrative tribunal, including disclosures to opposing counsel in the course of settlement negotiations.
3. A record in this system of records may be disclosed, as a routine use, to a Member of Congress submitting a request involving an individual, to whom the record pertains, when the individual has requested assistance from the Member with respect to the subject matter of the record.
4. A record in this system of records may be disclosed, as a routine use, to a contractor of the Agency having need for the information in order to perform a contract. Recipients of information shall be required to comply with the requirements of the Privacy Act of 1974, as amended, pursuant to 5 U.S.C. 552a(m).
5. A record related to an International Application filed under the Patent Cooperation Treaty in this system of records may be disclosed, as a routine use, to the International Bureau of the World Intellectual Property Organization, pursuant to the Patent Cooperation Treaty.
6. A record in this system of records may be disclosed, as a routine use, to another federal agency for purposes of National Security review (35 U.S.C. 181) and for review pursuant to the Atomic Energy Act (42 U.S.C. 218(c)).
7. A record from this system of records may be disclosed, as a routine use, to the Administrator, General Services, or his/her designee, during an inspection of records conducted by GSA as part of that agency's responsibility to recommend improvements in records management practices and programs, under authority of 44 U.S.C. 2904 and 2906. Such disclosure shall be made in accordance with the GSA regulations governing inspection of records for this purpose, and any other relevant (*i.e.*, GSA or Commerce) directive. Such disclosure shall not be used to make determinations about individuals.
8. A record from this system of records may be disclosed, as a routine use, to the public after either publication of the application pursuant to 35 U.S.C. 122(b) or issuance of a patent pursuant to 35 U.S.C. 151. Further, a record may be disclosed, subject to the limitations of 37 CFR 1.14, as a routine use, to the public if the record was filed in an application which became abandoned or in which the proceedings were terminated and which application is referenced by either a published application, an application open to public inspection or an issued patent.
9. A record from this system of records may be disclosed, as a routine use, to a Federal, State, or local law enforcement agency, if the USPTO becomes aware of a violation or potential violation of law or regulation.

PART B - FEE(S) TRANSMITTAL

Complete and send this form, together with applicable fee(s), to: Mail **Mail Stop ISSUE FEE**
Commissioner for Patents
P.O. Box 1450
Alexandria, Virginia 22313-1450
or Fax (571)-273-2885

INSTRUCTIONS: This form should be used for transmitting the ISSUE FEE and PUBLICATION FEE (if required). Blocks 1 through 5 should be completed where appropriate. All further correspondence including the Patent, advance orders and notification of maintenance fees will be mailed to the current correspondence address as indicated unless corrected below or directed otherwise in Block 1, by (a) specifying a new correspondence address; and/or (b) indicating a separate "FEE ADDRESS" for maintenance fee notifications.

CURRENT CORRESPONDENCE ADDRESS (Note: Use Block 1 for any change of address)

Note: A certificate of mailing can only be used for domestic mailings of the Fee(s) Transmittal. This certificate cannot be used for any other accompanying papers. Each additional paper, such as an assignment or formal drawing, must have its own certificate of mailing or transmission.

Certificate of Mailing or Transmission

I hereby certify that this Fee(s) Transmittal is being deposited with the United States Postal Service with sufficient postage for first class mail in an envelope addressed to the Mail Stop ISSUE FEE address above, or being facsimile transmitted to the USPTO (571) 273-2885, on the date indicated below.

(Depositor's name)
(Signature)
(Date)

APPLICATION NO.	FILING DATE	FIRST NAMED INVENTOR	ATTORNEY DOCKET NO.	CONFIRMATION NO.

TITLE OF INVENTION:

APPLN. TYPE	SMALL ENTITY	ISSUE FEE DUE	PUBLICATION FEE DUE	PREV. PAID ISSUE FEE	TOTAL FEE(S) DUE	DATE DUE

EXAMINER	ART UNIT	CLASS-SUBCLASS

1. Change of correspondence address or indication of "Fee Address" (37 CFR 1.363).

☐ Change of correspondence address (or Change of Correspondence Address form PTO/SB/122) attached.

☐ "Fee Address" indication (or "Fee Address" Indication form PTO/SB/47; Rev 03-02 or more recent) attached. **Use of a Customer Number is required.**

2. For printing on the patent front page, list

(1) the names of up to 3 registered patent attorneys or agents OR, alternatively,

(2) the name of a single firm (having as a member a registered attorney or agent) and the names of up to 2 registered patent attorneys or agents. If no name is listed, no name will be printed.

1 _____

2 _____

3 _____

3. ASSIGNEE NAME AND RESIDENCE DATA TO BE PRINTED ON THE PATENT (print or type)

PLEASE NOTE: Unless an assignee is identified below, no assignee data will appear on the patent. If an assignee is identified below, the document has been filed for recordation as set forth in 37 CFR 3.11. Completion of this form is NOT a substitute for filing an assignment.

(A) NAME OF ASSIGNEE

(B) RESIDENCE: (CITY and STATE OR COUNTRY)

Please check the appropriate assignee category or categories (will not be printed on the patent) : ☐ Individual ☐ Corporation or other private group entity ☐ Government

4a. The following fee(s) are submitted:

☐ Issue Fee

☐ Publication Fee (No small entity discount permitted)

☐ Advance Order - # of Copies _____

4b. Payment of Fee(s): **(Please first reapply any previously paid issue fee shown above)**

☐ A check is enclosed.

☐ Payment by credit card. Form PTO-2038 is attached.

☐ The Director is hereby authorized to charge the required fee(s), any deficiency, or credit any overpayment, to Deposit Account Number _____ (enclose an extra copy of this form).

5. **Change in Entity Status** (from status indicated above)

☐ a. Applicant claims SMALL ENTITY status. See 37 CFR 1.27.

☐ b. Applicant is no longer claiming SMALL ENTITY status. See 37 CFR 1.27(g)(2).

NOTE: The Issue Fee and Publication Fee (if required) will not be accepted from anyone other than the applicant; a registered attorney or agent; or the assignee or other party in interest as shown by the records of the United States Patent and Trademark Office.

Authorized Signature _____ Date _____

Typed or printed name _____ Registration No. _____

This collection of information is required by 37 CFR 1.311. The information is required to obtain or retain a benefit by the public which is to file (and by the USPTO to process) an application. Confidentiality is governed by 35 U.S.C. 122 and 37 CFR 1.14. This collection is estimated to take 12 minutes to complete, including gathering, preparing, and submitting the completed application form to the USPTO. Time will vary depending upon the individual case. Any comments on the amount of time you require to complete this form and/or suggestions for reducing this burden, should be sent to the Chief Information Officer, U.S. Patent and Trademark Office, U.S. Department of Commerce, P.O. Box 1450, Alexandria, Virginia 22313-1450. DO NOT SEND FEES OR COMPLETED FORMS TO THIS ADDRESS. SEND TO: Commissioner for Patents, P.O. Box 1450, Alexandria, Virginia 22313-1450.

Under the Paperwork Reduction Act of 1995, no persons are required to respond to a collection of information unless it displays a valid OMB control number.

UNITED STATES PATENT AND TRADEMARK OFFICE

Commissioner for Patents
United States Patent and Trademark Office
P.O. Box 1450
Alexandria, VA 22313-1450
www.uspto.gov

NEIFELD IP LAW, PC
4813-B EISENHOWER AVENUE
ALEXANDRIA VA 22304

COPY MAILED

JUL 07 2008

In re Application of	:	
Gary J. Becker, et al.	:	
Application No. 10/390,100	:	DECISION ON PETITION
Filed: March 17, 2003	:	TO WITHDRAW
Attorney Docket No. EDWA0016U-US1	:	FROM RECORD
	:	

This is a decision on the Request to Withdraw as attorney or agent of record under 37 C.F.R. § 1.36(b), filed August 29, 2007.

The request is **NOT APPROVED**.

A grantable request to withdraw as attorney/agent of record must be signed by every attorney/agent seeking to withdraw or contain a clear indication that one attorney is signing on behalf of another/others. A request to withdraw will not be approved unless at least 30 (thirty) days would remain between the date of approval and the later of the expiration date of a time to file a response or the expiration date of the maximum time period which can be extended under 37 C.F.R. § 1.136(a).

The Office cannot approve the request at this time since the reasons provided do not meet any of the conditions under the mandatory or permissive categories enumerated in 37 CFR 10.40. Section 10.40 of Title 37 of the Code of Federal Regulation states, "[a] practitioner shall not withdraw from employment in a proceeding before the Office without permission from the Office[.]" More specifically, 37 CFR 10.40 states, "[i]f paragraph (b) of this section is not applicable, a practitioner may not request permission to withdraw in matter pending before the Office unless such request or such withdrawal is" for one the permissive reasons listed in 37 CFR 10.40(c). The reason set forth in the request, "applicant is represented by White & Case", does not meet any of the conditions set forth in 37 CFR 10.40.

In order to request or take action in a patent matter, the assignee must establish its ownership of the patent to the satisfaction of the Director. In this regard, a Statement under 37 CFR 3.73(b) must have either: (i) documentary evidence of a chain of title from the original owner to the assignee (*e.g.*, copy of an executed assignment), and a statement affirming that the documentary evidence of the chain of title from the original owner to the assignee was or concurrently is being

submitted for recordation pursuant to § 3.11; or (ii) a statement specifying where documentary evidence of a chain of title from the original owner to the assignee is recorded in the assignment records of the Office (*e.g.*, reel and frame number).

All future communications from the Office will continue to be directed to the above-listed address until otherwise notified by applicant.

Telephone inquiries concerning this decision should be directed to undersigned at 571-272-1642.

April M. Wise
Petitions Examiner
Office of Petitions

cc: WHITE & CASE
1155 AVENUE OF THE AMERICAS
NEW YORK, NY 10036-2787

UNITED STATES PATENT AND TRADEMARK OFFICE

Commissioner for Patents
United States Patent and Trademark Office
P.O. Box 1450
Alexandria, VA 22313-1450
www.uspto.gov

STEVEN R. SCOTT
EUGENE STEPHENS & ASSOCIATES
56 WINDSOR STREET
ROCHESTER NY 14605

COPY MAILED

NOV 03 2005

OFFICE OF PETITIONS

In re Patent No. 6,868,562 :
Issue Date: March 22, 2005 :
Application No. 10/390,126 :
Filed: March 17, 2003 :
Attorney Docket No: ARP 03/03

ON PETITION

This is a decision on the petition, filed September 29, 2005, requesting the issuance of a duplicate Letters Patent for the above-identified application. The petition is treated under 37 CFR 1.182.

The petition is **DISMISSED**.

It is U.S. Patent and Trademark Office practice to assure mailing of all papers such as the Letters Patent in this application, on the date indicated and duly addressed and timely delivered to the addressee.

Petitioners believe the original letters patent to have been lost however, a review of the file reveals an address on the petition which differs from the address of record. Although the address remains 56 Windsor Street, Rochester, NY, the petition appears to come from Brown & Michaels, PC and not Steven R. Scott at Eugene R. Stephens. There does not however, appear to have been a revocation and power of attorney or a change of name, address or addressee filed in this application prior to the mailing of the patent grant and as such, the original letters patent was properly mailed to Steven R. Scott at Eugene R. Stephens, which may account for why petitioners argue non-receipt.

Nonetheless, petitioners have not presented any evidence to prove that the Letters Patent mailed December 14, 2004 were incorrectly addressed or that the Original, Ribboned copy of the Letters Patent mailed December 14, 2004, if properly addressed, were not received.

In view of the above and since the failure to receive the letters patent by the party entitled to receive same, the petition for a duplicate Letters Patent cannot be granted. In the absence thereof, a request for the issuance of duplicate Letters Patent carries with it a required petition fee in the amount of $400.00 pursuant to 37 CFR 1.182 and 37 CFR 1.17(f).

A courtesy copy of this decision is being mailed to the address and addressee on the petition, however, all future correspondence will be mailed solely to the correspondence address of record.

Telephone inquiries concerning this matter may be directed to the undersigned Petitions Attorney at (571) 272-3212.

Patricia Faison-Ball

Patricia Faison-Ball
Senior Petitions Attorney
Office of Petitions

cc:
BROWN & MICHAELS, PC
56 WINDSOR STREET
ROCHESTER NY 14605

UNITED STATES PATENT AND TRADEMARK OFFICE

COMMISSIONER FOR PATENTS
UNITED STATES PATENT AND TRADEMARK OFFICE
P.O. BOX 1450
ALEXANDRIA, VA 22313-1450
www.uspto.gov

Paper No. 4

FLESHNER & KIM, LLP
P.O. BOX 221200
CHANTILLY, VA 20153-1200

COPY MAILED

NOV 0 7 2003

OFFICE OF PETITIONS

ON PETITION

In re Application of
Kim et al.
Application No. 10/390,177
Filed: March 18, 2003
Attorney Docket No. IK-0055

This is a decision on the petition under 37 CFR 1.137(b), filed June 11, 2003, to revive the above-identified application.

The petition is **DISMISSED**.

Any request for reconsideration must be submitted within TWO (2) MONTHS from the mail date of this decision. No further petition fee is required for the request. Extensions of time under 37 CFR 1.136(a) are permitted. The reconsideration request should include a cover letter entitled "Renewed Petition under 37 CFR 1.137(b)." This is **not** a final agency action within the meaning of 5 U.S.C. § 704.

The above-identified application became abandoned for failure to reply in a timely manner to the Notice to File Missing Parts of Application (Notice) mailed May 22, 2003. The Notice set a period for reply of two (2) months from the mail date of the Notice. No extensions of time under the provisions of 37 CFR 1.136(a) were obtained. Accordingly, the above-identified application became abandoned on July 23, 2003.

A grantable petition under 37 CFR 1.137(b) must be accompanied by:
(1) the required reply,[1]
(2) the petition fee,
(3) a statement that the entire delay in filing the required reply from the due date for the reply until the filing of a grantable petition pursuant to 37 CFR 1.137(b) was unintentional, and
(4) a terminal disclaimer and fee if the application was filed on or before June 8, 1995 or if the application is a design application.

Where there is a question as to whether either the abandonment or the delay in filing a petition under 37 CFR 1.137 was unintentional, the Commissioner may require additional information.[2]

The instant petition lacks item (1). In this regard, petitioner has not submitted the items required by the Notice mailed on May 22, 2003; i.e., the submission of a $750 statutory basic filing fee and a $130 surcharge for its late filing.

However, the petition indicates that the reply is the filing of a continuing application, which appears to have been assigned Application No. 10/458,241 and a filing date of June 11, 2003. If in fact petitioner desires to revive this application solely for copendency purposes with the continuing application, then only a $130 retention fee is required if applicants desire to claim the benefit of a prior-filed copending nonprovisional application. In this regard, note 37 CFR 1.78(a)(1)(iv). Once the $130 retention fee has been received, this application will be revived for purposes of copendency only with the continuing application. Afterwards, the

---

[1] In a nonprovisional application abandoned for failure to prosecute, the required reply may be met by the filing of a continuing application. In an application or patent, abandoned or lapsed for failure to pay the issue fee or any portion thereof, the required reply must be the payment of the issue fee or any outstanding balance thereof.

[2] See MPEP 711.03(c)(III)(C) and (D).

application will be processed as an abandoned application and forwarded to Files Repository for storage.

There is no indication that the person signing the instant petition was ever given a power of attorney or authorization of agent to prosecute the above-identified application. If the person signing the instant petition desires to receive future correspondence regarding this application, the appropriate power of attorney or authorization of agent must be submitted. While a courtesy copy of this decision is being mailed to the person signing the instant petition, all future correspondence will be directed solely to the address currently of record until such time as appropriate instructions are received to the contrary.

It is not apparent whether the person signing the statement of unintentional delay was in a position to have firsthand or direct knowledge of the facts and circumstances of the delay at issue. Nevertheless, such statement is being treated as having been made as the result of a reasonable inquiry into the facts and circumstances of such delay.[3] In the event that such an inquiry has not been made, petitioner must make such an inquiry. If such inquiry results in the discovery that it is not correct that the entire delay in filing the required reply from the due date for the reply until the filing of a grantable petition pursuant to 37 CFR 1.137(b) was intentional, petitioner must notify the Office.

Further correspondence with respect to this matter should be addressed as follows:

By mail: Mail Stop PETITION
Commissioner for Patents
Post Office Box 1450
Alexandria, VA 22313-1450

By facsimile: (703) 308-6916
Attn: Office of Petitions

By hand: Office of Petitions
2201 South Clark Place
Crystal Plaza 4, Suite 3C23
Arlington, VA 22202

Telephone inquiries should be directed to Paralegal Liana Chase at (703) 306-0482.

Frances Hicks

Frances Hicks
Petitions Examiner
Office of Petitions
Office of the Deputy Comissioner
for Patent Examination Policy

cc: John C. Eisenhart
14500 Avion Parkway
Suite 125
Chantilly, VA 20151

---

[3] See 37 CFR 10.18(b) and Changes to Patent Practice and Procedure; Final Rule Notice, 62 Fed. Reg. 53131, 53178 (October 10, 1997), 1203 Off. Gaz. Pat. Office 63, 103 (October 21, 1997).

UNITED STATES PATENT AND TRADEMARK OFFICE

Commissioner for Patents
United States Patent and Trademark Office
P.O. Box 1450
Alexandria, VA 22313-1450
www.uspto.gov

Paper No. 5

FLESHNER & KIM, LLP
P.O. BOX 221200
CHANTILLY, VA 20153-1200

COPY MAILED
JUN 2 2 2004
OFFICE OF PETITIONS

In re Application of	:	
Kim et al.	:	
Application No. 10/390,177	:	ON PETITION
Filed: March 18, 2003	:	
Attorney Docket No. IK-0055	:	

CORRECTED DECISION

This is a corrected decision on the petition under 37 C.F.R. § 1.137(b), filed June 11, 2003, to revive the above-identified application.

The decision previously rendered on November 7, 2003 is hereby **VACATED**.

The petition was inadvertently matched with the above-identified application rather than the correct application, 10/458,241.

Accordingly, the above-identified application was not and is not abandoned.

The application will be forwarded to the Office of Initial Patent Examination for further processing.

Telephone inquiries should be directed to the undersigned at (703) 306-0482.

Liana Chase
Petitions Examiner
Office of Petitions
Office of the Deputy Commissioner
for Patent Examination Policy

UNITED STATES PATENT AND TRADEMARK OFFICE

Commissioner for Patents
United States Patent and Trademark Office
P.O. Box 1450
Alexandria, VA 22313-1450
www.uspto.gov

DIANE E. BURKE
MUELLER AND SMITH, LPA
7700 RIVERS EDGE DRIVE
COLUMBUS OH 43235

COPY MAILED

JUN 28 2005

OFFICE OF PETITIONS

In re Application of
John A. Robertson :
Application No. 10/390,211 : ON PETITION
Filed: March 17, 2003 :
Attorney Docket No: INF2-051-3 :

This is a decision on the petition filed February 19, 2004, to withdraw the holding of abandonment under 37 CFR 1.181, or in the alternative, to revive the above identified application under 37 CFR 1.137(b). [1]

The petition to withdraw the holding of abandonment is **GRANTED**.
The petition to revive under 37 CFR 1.137(b) is **DISMISSED** as involving moot issues.

The application was held abandoned on July 10, 2004, for failure to file a timely response to the Notice to File Missing Parts mailed May 9, 2004. The office action set a two month shortened statutory period for supplying the missing oath or declaration and surcharge for its late filing. Accordingly, a Notice of Abandonment was mailed on February 10, 2004.

In the petition to withdraw the holding of abandonment under 37 CFR 1.181, petitioner asserts that the oath or declaration was properly submitted with the other application papers filed on March 17, 2003. In support, petitioner has submitted, a copy of the oath/declaration, as well as an itemized post card receipt, with a United States Patent & Trademark Office date stamped March 17, 2003.

---

[1] Effective December 1, 1997, the provisions of 37 CFR 1.137(b) now provide that where the delay in reply was unintentional, a petition may be filed to revive an abandoned application or a lapsed patent pursuant to 37 CFR 1.137(b). A grantable petition filed under the provisions of 37 CFR 1.137(b) must be accompanied by:

(1) the required reply, unless previously filed. In a nonprovisional application abandoned for failure to prosecute, the required reply may be met by the filing of a continuing application. In an application or patent, abandoned or lapsed for failure to pay the issue fee or any portion thereof, the required reply must be the payment of the issue fee or any outstanding balance thereof.

(2) the petition fee as set forth in 37 CFR 1.17(m);

(3) a statement that the entire delay in filing the required reply from the due date for the reply until the filing of a grantable petition pursuant to 37 CFR 1.137(b) was unintentional. The Commissioner may required additional information where there is a question whether the delay was unintentional; and

(4) any terminal disclaimer (and fee as set forth in 37 CFR 1.20(d)) required pursuant to 37 CFR 1.137(c)).

Accordingly, the Notice to File Missing Parts was sent in error and is hereby **VACATED**. In view thereof, the Notice of Abandonment mailed on February 10, 2004 is withdrawn. No petition fee is due and none has been charged for the petition under 37 CFR 1.181.

Since the petition under 37 CFR 1.137(b) is not being treated, the petition fee in the amount of $665.00 will be credited to deposit account no. 13-4830.

This matter is being referred to the Office of Initial Patent Examination for further pre-examination processing.

Telephone inquiries concerning this matter may be directed to the undersigned Petitions Attorney at (571) 272-3212.

Patricia Faison-Ball

Patricia Faison-Ball
Senior Petitions Attorney
Office of Petitions

UNITED STATES PATENT AND TRADEMARK OFFICE

Commissioner for Patents
United States Patent and Trademark Office
P.O. Box 1450
Alexandria, VA 22313-1450
www.uspto.gov
DIW Oct-05

PATULA & ASSOCIATES, P.C.
116 S. MICHIGAN AVENUE, 14TH FLOOR
CHICAGO IL 60603

COPY MAILED

OCT 14 2005

OFFICE OF PETITIONS

In re Application of	:	
Frederick K. Rosen	:	
Application No. 10/390,213	:	ON PETITION
Filed: 17 March, 2003	:	
Atty Dckt No. 5406/55465	:	

This is a decision on the petition to revive the above-identified application filed on 26 September, 2005, under 37 CFR 1.137(b),[1] which, in light of petitioner's statement that the Office action was never received, is first treated as a petition to withdraw the holding of abandonment.

The petition to withdraw the holding of abandonment is **DISMISSED**.

The petition under 37 CFR 1.137(b) is **GRANTED**.

The application became abandoned on 10 December, 2004, for failure to timely file a response to the non-final Office action mailed on 9 September, 2004, which set a three (3) month shortened statutory period for reply. No extensions of the time

---

[1] Effective December 1, 1997, the provisions of 37 CFR 1.137(b) now provide that where the delay in reply was unintentional, a petition may be filed to revive an abandoned application or a lapsed patent pursuant to 37 CFR 1.137(b). A grantable petition filed under the provisions of 37 CFR 1.137(b) must be accompanied by:

(1) the required reply, unless previously filed. In a nonprovisional application abandoned for failure to prosecute, the required reply may be met by the filing of a continuing application. In a nonprovisional utility or plant application filed on or after June 8, 1995, and abandoned for failure to prosecute, the required reply may also be met by the filing of a request for continuing examination in compliance with § 1.114. In an application or patent, abandoned or lapsed for failure to pay the issue fee or any portion thereof, the required reply must be the payment of the issue fee or any outstanding balance thereof.

(2) the petition fee as set forth in 37 CFR 1.17(m);

(3) a statement that the entire delay in filing the required reply from the due date for the reply until the filing of a grantable petition pursuant to 37 CFR 1.137(b) was unintentional. The Commissioner may required additional information where there is a question whether the delay was unintentional; and

(4) any terminal disclaimer (and fee as set forth in 37 CFR 1.20(d)) required pursuant to 37 CFR 1.137(c)).

for reply in accordance with 37 CFR 1.136(a) were obtained. Notice of Abandonment was mailed on 20 April, 2005.

Petitioner asserts that applicant's counsel has no record of receiving the Office action mailed on 9 September, 2004.

PETITION TO WITHDRAW THE HOLDING OF ABANDONMENT

Petitioner asserts that the Notice mailed on 9 September, 2004, was never received. A review of the record indicates no irregularity in the mailing of the Office action, and in the absence of any irregularity in the mailing, there is a strong presumption that the Office action was properly mailed to the address of record. This presumption may be overcome by a showing that the Office action was not in fact received. The showing required to establish the failure to receive an Office action must include a statement from the practitioner stating that the Office communication was not received by the practitioner and attesting to the fact that a search of the file jacket and docket records indicates that the Office communication was not received. A copy of the docket record where the non-received Office communication would have been entered had it been received and docketed must be attached to and referenced in practitioner's statement.[2] The showing outlined above may not be sufficient if there are circumstances that point to a conclusion that the Office communication may have been lost after receipt rather than a conclusion that the Office action was lost in the mail (e.g. if the practitioner has a history of not receiving Office actions).

The showing of record is insufficient to warrant withdrawal of the holding of abandonment. Petitioner has not presented a statement from the practitioner attesting to the fact that a search of the file jacket and docket records indicates that the Office communication was not received, or a copy of the docket record where the non-received Office communication would have been entered had it been received and docketed attached to and referenced in petitioner's statement. As the required showing has not been presented, the petition must be dismissed.

PETITION UNDER 37 CFR 1.137(B)

The petition is granted.

---

[2] M.P.E.P. § 711.03(c); See Notice entitled "Withdrawing the Holding of Abandonment When Office Actions Are Not Received," 1156 O.G. 53 (November 16, 1993).

The application is being referred to Technology Center Art Unit 3634 for further processing.

Telephone inquiries concerning this matter may be directed to the undersigned at (571) 272-3231.

Douglas I. Wood
Senior Petitions Attorney
Office of Petitions

UNITED STATES PATENT AND TRADEMARK OFFICE

Commissioner for Patents
United States Patent and Trademark Office
P.O. Box 1450
Alexandria, VA 22313-1450
www.uspto.gov

JOSEPH J. LAKS
THOMSON LICENSING, LLC
2 INDEPENDENCE WAY, PATENT OPERATIONS
PO BOX 5312
PRINCETON, NJ 08543

COPY MAILED

JUN 3 0 2008

OFFICE OF PETITIONS

In re Application of	:	
ZHAO, et al.	:	
Application No. 10/390,215	:	DECISION ON PETITION
Filed: March 17, 2003	:	Under 37 CFR 1.137(b)
Attorney Docket No. **PU050064**	:	

This is a decision on the petition under 37 CFR 1.137(b), filed June 29, 2007, to revive the above-identified application.

The petition is **GRANTED.**

The application became abandoned for failure to reply in a timely manner to the non-final Office action mailed, July 7, 2006, which set a shortened statutory period for reply of three (3) months. No extensions of time under the provisions of 37 CFR 1.136(a) were obtained. Accordingly, the application became abandoned on October 8, 2006.

The petition satisfies the requirements of 37 CFR 1.137(b) in that petitioner has supplied (1) the reply in the form of an amendment; (2) the petition fee of $1500; and (3) an adequate statement of unintentional delay.

The petition is not signed by an attorney of record. Nevertheless, in accordance with 37 CFR 1.34, the signature of Mr. Gordon E. Nelson appearing on the correspondence shall constitute a representation to the United States Patent and Trademark Office that he is authorized to represent the particular party on whose behalf he acts. If Mr. Nelson desires to receive future correspondence regarding this file, the appropriate power of attorney documents must be submitted. A courtesy copy of this decision is being mailed to petitioner herein. However, until otherwise instructed, all future correspondence regarding this application file will be directed solely to the above-noted correspondence address of record.

The application is being referred to Technology Center Art Unit 2131 for consideration of the amendment filed June 29, 2007.

Telephone inquiries concerning this decision should be directed to Monica A. Graves at (571) 272-7253.

Brian W. Brown
Petitions Examiner
Office of Petitions

cc: **GORDON E. NELSON**
57 CENTRAL STREET/P.O. BOX 782
ROWLEY, MA 01969

UNITED STATES PATENT AND TRADEMARK OFFICE

Commissioner for Patents
United States Patent and Trademark Office
P.O. Box 1450
Alexandria, VA 22313-1450
www.uspto.gov

COPY MAILED

FEB 05 2007

OFFICE OF PETITIONS

Donald Bollella
126 Almador
Irvine CA 92614

In re Application of	:
Thor, et. al	: DECISION ON PETITION
Application No. 10/390,219	:
Filed: March 15, 2003	:
Docket No.: THOR-00101US	:

This is a decision on the petition under 37 C.F.R. § 1.137(b), filed August 15, 2006

The petition is hereby **GRANTED**.

This application became abandoned for failure to timely submit a proper reply to the Notice of Allowance (Notice) mailed December 15, 2004. Notice of Abandonment was mailed July 7, 2005.

A grantable petition pursuant to 37 C.F.R. § 1.137(b) must be accompanied by: (1) the required reply to the outstanding Office action or notice, unless previously filed; (2) the petition fee as set forth in 37 C.F.R. § 1.17(m); (3) a statement that the entire delay in filing the required reply from the due date for the reply until the filing of a grantable petition pursuant to 37 C.F.R. § 1.137(b) was unintentional; and (4)any terminal disclaimer (and fee set forth in 37 C.F.R. § 1.20(d)) required pursuant to 37 C.F.R. § 1.137(c).

The above-identified application has been abandoned for an extended period of time. The Office is relying on petitioner's duty of candor and good faith in accepting the statement that the entire delay in filing the required reply from the due date for the reply until the filing of a grantable petition pursuant to 37 CFR 1.137(b) was unintentional. See, Changes to Patent Practice and Procedure, 62 Fed. Reg. at 53160 and 53178; 1203 Off. Gaz. Pat. Office at 88 and 103 (response to comments 64 and 109) (applicant obligated under 37 CFR 10.18 to inquire into the underlying facts and circumstances when providing the statement required by 37 CFR 1.137(b) to the Patent and Trademark Office).

The instant petition has been reviewed and found in compliance with the provisions of 37 C.F.R. § 1.137(b). Accordingly, the failure to timely submit a proper reply to the Notice is accepted as having been unintentionally delayed.

This application will be forwarded to the Office of Patent Publication for further processing.

Telephone inquiries concerning this matter may be directed to the undersigned at (571) 272-3205.

Alesia M. Brown
Petitions Attorney
Office of Petitions

UNITED STATES PATENT AND TRADEMARK OFFICE

Commissioner for Patents
United States Patent and Trademark Office
P.O. Box 1450
Alexandria, VA 22313-1450
www.uspto.gov

CHRISTIE, PARKER & HALE, LLP
P.O. BOX 7068
PASADENA CA 91109-7068

COPY MAILED

JUN 0 1 2005

OFFICE OF PETITIONS

In re Application of
Nicolae Bostan
Application No. 10/390,222
Filed: March 17, 2003
Attorney Docket No. 49947/AW/B724

ON PETITION

This is a decision on the petition filed February 28, 2005, under 37 CFR 1.78(a)(3) to accept an unintentionally delayed claim under 35 U.S.C. § 365(c) for the benefit of a prior-filed international application designating the United States of America (Application No. PCT/US99/19641, filed August 27, 1999).

The petition is **DISMISSED** as moot for the reasons stated below.

The instant petition seeks correction of an improperly worded or incomplete claim of priority under 35 U.S.C. § 120 in relation to U.S. Application No. 09/763,714, which was not properly referenced as the National Stage of International Application No. PCT/US99/196541. In this regard, petitioner seeks to add the following language to the specification: "This application is a continuation of U.S. Application No. 09/763,714, filed February 22, 2001, which is the National Stage of International Application No. PCT/US99/19641, filed August 27, 1999, which claims the benefit under 35 U.S.C. § 119(e) of U.S. Provisional Application 60/098,204, filed August 27, 1998."

It is not necessary here to file a petition under 37 CFR 1.78(a)(3), since, as set forth in MPEP 1893.03(c), page 1800-149, a national stage application filed under 35 U.S.C. § 371 may not claim benefit of the filing date of the international application of which it is the national stage since its filing date is the date of filing of that international application. *See also* MPEP 1893.03(b). Accordingly, it is not necessary for the applicant to amend the first sentence of the specification to reference the international application number that was used to identify the application during international processing of the application by the international authorities prior to commencement of the national stage under 35 U.S.C. § 371. Therefore, the supplemental preliminary amendment filed on February 28, 2005 was unnecessary.

It is noted that a claim for provisional Application No. 60/098,204 was present in the specification on filing. However, because the Office did not carry forth the fact that

intermediate Application No. 09/763,714 is the national stage of the above-noted PCT application, and because the filing date of the provisional application was more than 12 months from the filing date of this application, the claim to the provisional application was not acknowledged.

For the reasons set out above, a corrected Filing Receipt which sets forth the fact that intermediate Application No. 09/763,714 is the national stage entry of International PCT Application No. 09/763,714, which claims priority to provisional Application No. 60/098,204, accompanies this decision on petition.

In view of the dismissal of the instant petition as moot, the $1370.00 fee submitted therefore is unnecessary. Accordingly, as authorized, this fee will be refunded to Deposit Account No. 03-1728 in due course.

Any inquiries concerning this decision may be directed to Senior Petitions Attorney Patricia Faison-Ball at (571) 272-3212.

This matter will be referred to the Publishing Division.

Frances Hicks

Frances Hicks
Lead Petitions Examiner
Office of Petitions
Office of the Deputy Commissioner
for Patent Examination Policy

ATTACHMENT: Corrected Filing Receipt

UNITED STATES PATENT AND TRADEMARK OFFICE

Commissioner for Patents
United States Patent and Trademark Office
P.O. Box 1450
Alexandria, VA 22313-1450
www.uspto.gov

JEROMIE GUMINSKI
15179 72ND STREET
SOUTH HAVEN, MI 49090

COPY MAILED

AUG 0 3 2007

OFFICE OF PETITIONS

In re Application of	:	
Guminski, Jeromie	:	
Application No. 10/390,237	:	ON PETITION
Filed: March 17, 2003	:	
Attorney Docket No. GUM01/P301	:	

This is a decision on the petition under 37 C.F.R. § 1.137(b), filed July 10, 2007, to revive the above-identified application.

The petition is **GRANTED.**

The petition satisfies the conditions for revival pursuant to the provisions of 37 CFR 1.137(b) in that (1) the reply in the form of an Amendment; (2) the petition fee; and (3) the required statement of unintentional delay have been received. Accordingly, the response has been accepted as having been unintentionally delayed.

Since the petitioner is no longer listed as an attorney of record, if petitioner wishes to receive future correspondence regarding this application, the appropriate power of attorney or authorization of agent must be submitted. While a courtesy copy of this decision is being mailed to the person signing the instant petition, all future correspondence will be directed solely to the address currently of record until such time as appropriate instructions are received to the contrary.

This matter is being referred to Technology Center 3700 for further examination on the merits.

Telephone inquiries regarding this decision should be directed to the undersigned at (571) 272-3206.

Liana Walsh
Petitions Examiner
Office of Petitions

Cc: PRICE, HENEVELD, COOPER, DEWITT & LITTON, LLP
695 KENMOOR, S.E.
POST OFFICE BOX 2567
GRAND RAPIDS, MI 49501

UNITED STATES PATENT AND TRADEMARK OFFICE

Commissioner for Patents
United States Patent and Trademark Office
P.O. Box 1450
Alexandria, VA 22313-1450
www.uspto.gov

NAVAL RESEARCH LABORATORY
ASSOCAITE COUNSEL (PATENTS)
CODE 1008.2
4555 OVERLOOK AVENUE SW
WASHINGTON, DC 20375-5320

COPY MAILED
MAY 2 3 2006
OFFICE OF PETITIONS

In re Application of	:
Debra Rolison et al	: DECISION ON PETITION
Application No. 10/390,257	: UNDER 37 CFR 1.137(b)
Filed: March 12, 2003	:
Attorney Docket No. 84469US1	:

This is a decision on the petition under 37 CFR 1.137(b), filed April 6, 2006, to revive the above-identified application.

The petition is **granted**.

This application became abandoned for failure to timely pay the issue and publication fees on or before January 17, 2006 as required by the Notice of Allowance and Fee(s) Due, mailed October 14, 2005.

The petition satisfies the requirements for a grantable petition in that the reply in the form of payment of the $1,400 issue fee and $300 publication fee; the petition fee of $1,500; and the required statement of unintentional delay have been submitted. Accordingly, the issue and publication fees are accepted as having been unintentionally delayed.

Inquiries related to this communication should be directed to the undersigned at (571) 272-3218.

This matter is being referred to Publishing Division.

Frances Hicks
Petitions Examiner
Office of Petitions

UNITED STATES PATENT AND TRADEMARK OFFICE

UNDER SECRETARY OF COMMERCE FOR INTELLECTUAL PROPERTY AND
DIRECTOR OF THE UNITED STATES PATENT AND TRADEMARK OFFICE
WASHINGTON, DC 20231
www.uspto.gov

UR

JUN 11 2003

PAPER NO. 3

In re Application of
Richard G. Mathew
Serial No:10/390,264
Filed: March 17, 2003
For: POTATO-BASED FOOD PRODUCTS TOLERABLE BY GLUTEN-INTOLERANT INDIVIDUALS AND METHODS OF MAKING AND USING THE SAME

PETITION UNDER
M.P.E.P. 708.02, IV

This is in response to the petition filed March 17, 2003, requesting that the above-identified application be granted Special Status under Section 708.02, IV of the MPEP and 37 CFR 1.102(c).

The petition has been considered and found to comply with the requirements set forth under the above-noted section. Accordingly, the petition is granted.

The petition is **GRANTED.**

JMStone

Jacqueline M. Stone, Director
Technology Center 1700
Chemical and Materials Engineering

Godfrey & Kahn S.C.
780 North Water Street
Milwaukee, WI 53202

UNITED STATES PATENT AND TRADEMARK OFFICE

Commissioner for Patents
United States Patent and Trademark Office
P.O. Box 1450
Alexandria, VA 22313-1450
www.uspto.gov

Paper No. 5

RICHARD E. BACKUS
LAW OFFICES OF RICHARD E. BACKUS
SUITE 490
685 MARKET STREET
SAN FRANCISCO, CA 94105

COPY MAILED
SEP 0 8 2004
OFFICE OF PETITIONS

In re Application of	:	
Will Kramer	:	
Application No. 10/390,277	:	ON PETITION
Filed: March 18, 2003	:	
Attorney Docket No. A6777	:	

This is a decision on the petition under 37 CFR 1.137(a), filed August 9, 2004, to revive the above-identified application.

The petition is **dismissed**.

Any request for reconsideration of this decision must be submitted within TWO (2) MONTHS from the mail date of this decision. Extensions of time under 37 CFR 1.136(a) are permitted. The reconsideration request should include a cover letter entitled "Renewed Petition under 37 CFR 1.137(a)."

This application became abandoned for failure to timely reply to the Office action mailed February 20, 2004, which set a one (1) month period to reply. Accordingly, this application became abandoned on March 21, 2004.

A grantable petition to revive an abandoned application under 37 CFR 1.137(a) must be accompanied by:

(1) The required reply, unless previously filed. In a nonprovisional application abandoned for failure to prosecute, the required reply may be met by the filing of a continuing application. In an application or patent, abandoned or lapsed for failure to pay the issue fee or any portion thereof, the required reply must be the payment of the issue fee or any outstanding balance thereof;

(2) The petition fee as set forth in § 1.17(l);

(3) A showing to the satisfaction of the Commissioner that the entire delay in filing the required reply from the due date for the reply until the filing of a grantable petition pursuant to this paragraph was unavoidable; and

(4) Any terminal disclaimer (and fee as set forth in § 1.20 (d)) required pursuant to paragraph (c) of this section.

This petition lacks item (3), as set forth above.

Decisions on reviving abandoned applications on the basis of "unavoidable" delay have adopted the reasonably prudent person standard in determining if the delay was unavoidable:

> The word 'unavoidable' . . . is applicable to ordinary human affairs, and requires no more or greater care or diligence than is generally used and observed by prudent and careful men in relation to their most important business. It permits them in the exercise of this care to rely upon the ordinary and trustworthy agencies of mail and telegraph, worthy and reliable employees, and such other means and instrumentalities as are usually employed in such important business. If unexpectedly, or through the unforeseen fault or imperfection of these agencies and instrumentalities, there occurs a failure, it may properly be said to be unavoidable, all other conditions of promptness in its rectification being present.

In re Mattullath, 38 App. D.C. 497, 514-15 (1912)(quoting Ex parte Pratt, 1887 Dec. Comm'r Pat. 31, 32-33 (1887)); see also Winkler v. Ladd, 221 F. Supp. 550, 552, 138 USPQ 666, 167-68 (D.D.C. 1963), aff'd, 143 USPQ 172 (D.C. Cir. 1963); Ex parte Henrich, 1913 Dec. Comm'r Pat. 139, 141 (1913). In addition, decisions on revival are made on a "case-by-case basis, taking all the facts and circumstances into account." Smith v. Mossinghoff, 671 F.2d 533, 538, 213 USPQ 977, 982 (D.C. Cir. 1982). Finally, a petition cannot be granted where a petitioner has failed to meet his or her burden of establishing that the delay was "unavoidable." Haines v. Quigg, 673 F. Supp. 314, 316-17, 5 USPQ2d 1130, 1131-32 (N.D. Ind. 1987).

Petitioner asserts that the delay was caused by non-receipt of the Office action.

The showing required to establish non-receipt of an Office communication must include a statement from the practitioner stating that the Office communication was not received by the practitioner and attesting to the fact that a search of the file jacket and docket records indicates that the Office communication was not received. A copy of the docket record where the non-received Office communication would have been entered had it been received and docketed must be attached to and referenced in practitioner's statement. See Withdrawing the Holding of Abandonment When Office Actions Are Not Received; Notice 1156 Off. Gaz. Pat. Office 53 (November 16, 1993).

As the required documentation has not been submitted, the petition must be dismissed.

Further correspondence with respect to this matter should be addressed as follows:

By mail: Mail Stop Petition
Commissioner for Patents
Box 1450
Alexandria, VA 22313

By FAX: (703) 872-9306
Attn: Office of Petitions

By hand: Customer Service Window
2011 South Clark Place
Crystal Plaza Two (left side entrance of building)
Arlington, VA

Telephone inquiries should be directed to the undersigned at (703)306-9200.

Edward J. Tannouse
Petitions Attorney
Office of Petitions
United States Patent and Trademark Office

UNITED STATES PATENT AND TRADEMARK OFFICE

Commissioner for Patents
United States Patent and Trademark Office
P.O. Box 1450
Alexandria, VA 22313-1450
www.uspto.gov

Paper No. 7

RICHARD E. BACKUS
LAW OFFICES OF RICHARD E. BACKUS
SUITE 490
685 MARKET STREET
SAN FRANCISCO, CA 94105

COPY MAILED

NOV 1 8 2004

OFFICE OF PETITIONS

In re Application of	:	
Will Kramer	:	
Application No. 10/390,277	:	ON PETITION
Filed: March 18, 2003	:	
Attorney Docket No. A6777	:	

This is a decision on the renewed petition under 37 C.F.R. § 1.137(a), filed November 1, 2004, to revive the above-identified application.

The petition is **GRANTED**.

This application became abandoned for failure to timely reply to the Office action mailed February 20, 2004, which set a one (1) month period to reply. Accordingly, this application became abandoned on March 21, 2004.

Decisions on reviving abandoned applications on the basis of "unavoidable" delay have adopted the reasonably prudent person standard in determining if the delay was unavoidable:

> The word 'unavoidable' . . . is applicable to ordinary human affairs, and requires no more or greater care or diligence than is generally used and observed by prudent and careful men in relation to their most important business. It permits them in the exercise of this care to rely upon the ordinary and trustworthy agencies of mail and telegraph, worthy and reliable employees, and such other means and instrumentalities as are usually employed in such important business. If unexpectedly, or through the unforeseen fault or imperfection of these agencies and instrumentalities,

> there occurs a failure, it may properly be said to be unavoidable, all other conditions of promptness in its rectification being present.

In re Mattullath, 38 App. D.C. 497, 514-15 (1912)(quoting Ex parte Pratt, 1887 Dec. Comm'r Pat. 31, 32-33 (1887)); see also Winkler v. Ladd, 221 F. Supp. 550, 552, 138 USPQ 666, 167-68 (D.D.C. 1963), aff'd, 143 USPQ 172 (D.C. Cir. 1963); Ex parte Henrich, 1913 Dec. Comm'r Pat. 139, 141 (1913). In addition, decisions on revival are made on a "case-by-case basis, taking all the facts and circumstances into account." Smith v. Mossinghoff, 671 F.2d 533, 538, 213 USPQ 977, 982 (D.C. Cir. 1982). Finally, a petition cannot be granted where a petitioner has failed to meet his or her burden of establishing that the delay was "unavoidable." Haines v. Quigg, 673 F. Supp. 314, 316-17, 5 USPQ2d 1130, 1131-32 (N.D. Ind. 1987).

Petitioner asserts that the delay was caused by non-receipt of the Office action.

The showing required to establish non-receipt of an Office communication must include a statement from the practitioner stating that the Office communication was not received by the practitioner and attesting to the fact that a search of the file jacket and docket records indicates that the Office communication was not received. A copy of the docket record where the non-received Office communication would have been entered had it been received and docketed must be attached to and referenced in practitioner's statement.

Petitioner has submitted the necessary statement and docket records that indicate non-receipt of the Office action. As such, the petition the petition is granted under 37 CFR 1.137(a).

This application is being forwarded to the Office of Initial Patent Examination for further processing.

Telephone inquiries concerning this matter may be directed to the undersigned at (703)272-3228.

Edward J. Tannouse
Petitions Attorney
Office of Petitions
United States Patent and Trademark Office

28 FEB 2006

UNITED STATES PATENT AND TRADEMARK OFFICE

Commissioner for Patents
United States Patent and Trademark Office
P.O. Box 1450
Alexandria, VA 22313-1450
www.uspto.gov

Summer Carrillo
#1302
5380 Medical Drive
San Antonio, Texas 78240

In re Application of	:
CARRILLO, Summer	:
Application No. 10/390,278	: DECISION ON PETITION
Filed: March 17, 2003	: UNDER 37 CFR 1.78(a)(6)
Attorney Docket No. None	:

This is a decision on the "Petition To Accept An Unintentionally Delayed Claim Under 35 U.S.C. § 119(E) For The Benefit Of A Prior Filed Provisional Application" filed May 31, 2005, treated herein as a petition under 37 CFR 1.78(a)(6) to accept an unintentionally delayed claim under 35 U.S.C. §119(e) for the benefit of the prior-filed provisional application identified in the concurrently filed amendment.

The petition is **GRANTED**.

A petition under 37 CFR 1.78(a)(6) is only applicable to those applications filed on or after November 29, 2000. Further, the petition is appropriate only after expiration of the period specified in 37 CFR 1.78(a)(5)(ii) and must be filed during the pendency of the nonprovisional application. In addition, the petition must be accompanied by:

(1) the reference required by 35 U.S.C. § 119(e) and 37 CFR 1.78(a)(5)(i) to the prior-filed application, unless previously submitted;
(2) the surcharge set forth in § 1.17(t); and
(3) a statement that the entire delay between the date the claim was due under 37 CFR 1.78(a)(5)(ii) and the date the claim was filed was unintentional. The Commissioner may require additional information where there is a question whether the delay was unintentional.

The instant pending nonprovisional application was filed after November 29, 2000, and the claim herein for the benefit of priority to the prior-filed provisional application is submitted after expiration of the period specified in 37 CFR 1.78(a)(5)(ii). Therefore, this is a proper petition under 37 CFR 1.78(a)(6).

The petition complies with the requirements for a grantable petition under 37 CFR 1.78(a)(6) in that (1) a reference to the prior-filed provisional application has been included in an amendment to the first sentence of the specification following the title, as provided by 37 CFR 1.78(a)(5)(iii); (2) the surcharge fee required by 37 CFR 1.17(t) has been submitted; and (3) the

petition contains a proper statement of unintentional delay. Accordingly, having found that the instant petition for acceptance of an unintentionally delayed claim for the benefit of priority under 35 U.S.C. § 119(e) to the above-noted, prior-filed provisional application satisfies the conditions of 37 CFR 1.78(a)(6), the petition is granted.

The granting of the petition to accept the delayed benefit claim to the prior-filed application under 37 CFR 1.78(a)(6) should not be construed as meaning that the instant application is entitled to the benefit of the filing date of the prior-filed application. In order for the instant application to be entitled to the benefit of the prior-filed application, all other requirements under 35 U.S.C. §119(e) and 37 CFR 1.78(a)(4) and (a)(5) must be met. Similarly, the fact that the corrected Filing Receipt accompanying this decision on petition includes the prior-filed application should not be construed as meaning that applicant is entitled to the claim for benefit of priority to the prior-filed application noted thereon. Accordingly, the examiner will, in due course, consider this benefit claim and determine whether the instant application is entitled to the benefit of the earlier filing date.

A corrected Filing Receipt, which includes the priority claim to the prior-filed provisional application, accompanies this decision on petition.

Any inquiries concerning this decision may be directed to Richard Ross at (571) 272-3296. All other inquiries concerning either the examination procedures or status of the application should be directed to the Technology Center.

The application is being referred to Technology Center AU 3727 for appropriate action, including consideration by the examiner of the claim under 35 U.S.C. §119(e) for the benefit of priority to prior-filed provisional Application No. 60/380,075, filed May 06, 2002.

Boris Milef
Legal Examiner
Office of Petitions
Office of the Deputy Commissioner
for Patent Examination Policy

ATTACHMENT: Corrected Filing Receipt

UNITED STATES PATENT AND TRADEMARK OFFICE

Commissioner for Patents
United States Patent and Trademark Office
P.O. Box 1450
Alexandria, VA 22313-1450
www.uspto.gov
DIW May-07

BUTZER & CHEN LAW, LLC
870 HIGH STREET, SUITE 104
WORTHINGTON OH 43085

COPY MAILED

MAY 30 2007

OFFICE OF PETITIONS

In re Application of	:	
Summer Carrillo	:	
Application No. 10/390,278	:	ON PETITION
Filed: 17 March, 2003	:	
For: TRASHCAN LINER	:	

This is a decision on the paper entitled "PETITION TO WITHDRAW HOLDING OF ABANDONMENT AND RESPONSE TO OFFICE ACTION" filed on 9 April, 2007.

This application became abandoned on 6 July, 2006, for failure to file a timely reply to the Office letter mailed on 5 June, 2006, which set a one (1) month shortened period for reply. No extensions of time under 37 CFR 1.136(a) were obtained. Notice of Abanonment was mailed on 8 January, 2007.

Petitioners assert that "neither Applicant nor Applicant's representative received the Office Action dated June 5, 2006."

A review of the record indicates no irregularity in the mailing of the Office action mailed on 5 June, 2006, and in the absence of any irregularity in the mailing, there is a strong presumption that the Office action was properly mailed to the address of record. This presumption may be overcome by a showing that the Office action was not in fact received. The showing required to establish non-receipt of an Office communication must include a statement from the practitioner, stating that the practitioner did not receive the Office communication and attesting to the fact that a search of the file jacket and docket records indicates that the Office communication was not received. A copy of the docket record where the non-received Office communication would have been entered had it been received and docketed must be attached to and referenced in practitioner's statement.[1] For example, if a three month period for reply was set in the non-received Office action, a copy of the docket report showing all replies docketed for a date three months from the mail date of

[1] M.P.E.P. § 711.03(c); See Notice entitled "Withdrawing the Holding of Abandonment When Office Actions Are Not Received," 1156 O.G. 53 (November 16, 1993).

the non-received Office action must be submitted as documentary proof of non-receipt of the Office action.

The showing of record is insufficient to warrant withdrawal of the holding of abandonment at this time. While petitioners have provided a copy of a docket record and a statement that the Office action was not received by counsel, the showing of record is that the Office communication was mailed to the applicant, not to counsel. Petitioner's counsel states "This case is somewhat different in that the mailing address for this case is Applicant's mailing address, not Applicant's representative's mailing address." As such, the showing of record must address whether or not the Office communication was received at the address of the applicant, rather than at counsel's address.

Accordingly, petitioners must provide the showing of a docket record and statement that a search of the file jacket and docket record shows that the Office communication mailed on 5 June, 2006, was not received at the **correspondence of record** (i.e., Applicant's address). A grantable petition requires a showing that the Office action was not received at the applicant's address.

As such the application is properly held abandoned.

The petition is **DISMISSED.**

Any request for reconsideration of this decision must be submitted within **TWO (2) MONTHS** from the mail date of this decision. The reconsideration request should include a cover letter entitled "Renewed Petition under 37 CFR 1.181."

ALTERNATIVE VENUE

Petitioner may wish to consider filing a petition under 37 CFR 1.137(b), which now provides that where the delay in reply was unintentional, a petition may be filed to revive an abandoned application or a lapsed patent pursuant to 37 CFR 1.137(b). A grantable petition pursuant to 37 CFR 1.137(b) must be accompanied by:

(1) the required reply, unless previously filed. In a nonprovisional application abandoned for failure to prosecute, the required reply may be met by the filing of a continuing application. In a nonprovisional utility or plant application filed on or after 8 June, 1995, and abandoned for failure to prosecute, the required reply may also be met by the filing of a

request for continued examination in compliance with § 1.114. In an application or patent, abandoned or lapsed for failure to pay the issue fee or any portion thereof, the required reply must be the payment of the issue fee or any outstanding balance thereof. In an application, abandoned for failure to pay the publication fee, the required reply must include payment of the publication fee.

(2) the petition fee as set forth in 37 CFR 1.17(m);

(3) a statement that the entire delay in filing the required reply from the due date for the reply until the filing of a grantable petition pursuant to 37 CFR 1.137(b) was unintentional. The Commissioner may required additional information where there is a question whether the delay was unintentional; and

(4) any terminal disclaimer (and fee as set forth in 37 CFR 1.20(d)) required pursuant to 37 CFR 1.137(c)).

The filing of a petition under the unintentional standard cannot be intentionally delayed and therefore should be filed promptly. A person seeking revival due to unintentional delay cannot make a statement that the delay was unintentional unless the entire delay, including the delay from the date it was discovered that the application was abandoned until the filing of the petition to revive under 37 CFR 1.137(b), was unintentional. A statement that the delay was unintentional is not appropriate if petitioner intentionally delayed the filing of a petition for revival under 37 CFR 1.137(b).

Receipt of the change of correspondence address is acknowledged.

Further correspondence with respect to this matter should be addressed as follows:

By mail: Mail Stop Petition
Commissioner for Patents
P.O. Box 1450
Alexandria, VA 22313-1450

By FAX: (571) 273-8300
Attn: Office of Petitions

By hand: Customer Service Window
Mail Stop Petition
Randolph Building
401 Dulany Street
Alexandria, VA 22314

Telephone inquiries related to this decision should be directed to the undersigned at 571-272-3231.

D Wood

Douglas I. Wood
Senior Petitions Attorney
Office of Petitions

UNITED STATES PATENT AND TRADEMARK OFFICE

Commissioner for Patents
United States Patent and Trademark Office
P.O. Box 1450
Alexandria, VA 22313-1450
www.uspto.gov
DIW Apr-10

MAILED

APR 23 2010

OFFICE OF PETITIONS

DANE C. BUTZER
11625 CUSTER #110-341
FRISCO TX 75035

In re Application of	:	
Summer Carrillo	:	
Application Number: 10/390278	:	ON PETITION
Filing Date: 03/17/2003	:	
Attorney Docket Number: CAR-001	:	
	:	

This is a decision on the petition under 37 CFR 1.137(b) filed on July 3, 2007.

The Office apologizes for the delay in responding to the subject petition.

The petition is **GRANTED**.

This application became abandoned on July 6, 2006, for failure file a timely reply to the Office letter mailed on June 5, 2006, which set a one (1) month shortened period for reply. No extensions of the time for reply under 37 CFR 1.136(a) were obtained. Notice of Abandonment was mailed on January 8, 2007. On April 9, 2007, a petition to withdraw the holding of abandonment was filed. On May 30, 2007, the petition was dismissed.

The reply received with the petition filed on April 9, 2007, will be considered as the reply to the Office letter mailed on June 5, 2006.

The application is referred to Technology Center Art Unit 3781 for further processing.

Telephone inquiries concerning this matter may be directed to the undersigned at (571) 272-3231.

D Wood

Douglas I. Wood
Senior Petitions Attorney
Office of Petitions

OIPE JC148
JUN 22 2005
PATENT & TRADEMARK OFFICE

3621

PTO/SB/83 (04-05)
Approved for use through 11/30/2005. OMB 0651-0035
U.S. Patent and Trademark Office, U.S. DEPARTMENT OF COMMERCE
Under the Paperwork Reduction Act of 1995, no persons are required to respond to a collection of information unless it displays a valid OMB control number.

REQUEST FOR WITHDRAWAL AS ATTORNEY OR AGENT AND CHANGE OF CORRESPONDENCE ADDRESS

Application Number	10/390,282
Filing Date	March 17, 2003
First Named Inventor	James Mark McDaniel, Jr.
Art Unit	3621
Examiner Name	
Attorney Docket Number	73199-281987

To: Commissioner for Patents
P.O. Box 1450
Alexandria, VA 22313-1450

APPROVED
JUL - 5 2005

Please withdraw me as attorney or agent for the above identified patent application, and

- [x] all the attorneys/agents of record.
- [ ] the attorneys/agents (with registration numbers) listed on the attached paper(s), or
- [ ] the attorneys/agents associated with Customer Number [ ]

NOTE: This box can only be checked when the power of attorney of record in the application is to all the practitioners associated with a customer number.

The reasons for this request are: Non-payment of attorney's fees (see Attached).

CORRESPONDENCE ADDRESS

1. [ ] The correspondence address is NOT affected by this withdrawal.
2. [x] Change the correspondence address and direct all future correspondence to:

[ ] The address associated with Customer Number: [ ]

OR

[x] Firm *or* Individual Name	James Mark McDaniel, Jr.				
Address	3312 Battleground Avenue				
City	Greensboro	State	North Carolina	Zip	27410
Country	U.S.				
Telephone	336-282-5000	Email			

Signature	Karl Schwappach		
Name	Karl G. Schwappach	Registration No.	35,786
Date	June 20, 2005	Telephone No.	612-766-7773

NOTE: Withdrawal is effective when approved rather than when received. Unless there are at least 30 days between approval of withdrawal and the expiration date of a time period for response or possible extension period, the request to withdraw is normally disapproved.

This collection of information is required by 37 CFR 1.36. The information is required to obtain or retain a benefit by the public which is to file (and by the USPTO to process) an application. Confidentiality is governed by 35 U.S.C. 122 and 37 CFR 1.11 and 1.14. This collection is estimated to take 12 minutes to complete, including gathering, preparing, and submitting the completed application form to the USPTO. Time will vary depending upon the individual case. Any comments on the amount of time you require to complete this form and/or suggestions for reducing this burden, should be sent to the Chief Information Officer, U.S. Patent and Trademark Office, U.S. Department of Commerce, P.O. Box 1450, Alexandria, VA 22313-1450. DO NOT SEND FEES OR COMPLETED FORMS TO THIS ADDRESS. SEND TO: **Commissioner for Patents, P.O. Box 1450, Alexandria, VA 22313-1450.**

If you need assistance in completing the form, call 1-800-PTO-9199 and select option 2.

OIPE JC148
JUN 2 2 2005
PATENT & TRADEMARK OFFICE

FAEGRE & BENSON LLP

COPY

UNITED STATES | ENGLAND | GERMANY | CHINA

KARL G. SCHWAPPACH
kschwappach@faegre.com
612.766.7773

May 5, 2005

Mark McDaniel
REBIT, LLC
3312 Battleground Avenue
Greensboro, North Carolina 27410

Re:

Dear Mark:

Our Accounting Department has informed me that your account has a balance of approximately $ that is over 365 days past due. There is an additional $ that is between 90 and 365 days past due. The current outstanding balance on your account is $

In order for Faegre & Benson to continue representing REBIT, LLC, we will need your account to be brought current within the next 30 days. If we do not receive payment of the outstanding balance, we will have no other choice but to withdraw from further representation of REBIT.

We appreciate your prompt attention to this matter.

Sincerely,

Karl Schwappach

Karl G. Schwappach

KGS:stefk

cc: John Werner

M2:20712017.01

REDACTED

10390312

SPE RESPONSE FOR CERTIFICATE OF CORRECTION

DATE : 61705 **Paper No.:** _____

TO SPE OF : ART UNIT 3636

SUBJECT : Request for Certificate of Correction on Patent No. 6871906

A response is requested with respect to the accompanying request for a certificate of correction.

Please complete this form and return with file, within **7** days to:
Palm location **7580, Certificates of Correction Branch – South Tower – 9A22**
If response is for an IFW, **return to employee (named below) via PUBSCofC Team in MADRAS.**
With respect to the change(s) requested, correcting Office and/or Applicant's errors, should the patent read as shown in the certificate of correction (COCIN)? No new matter should be introduced, nor should the scope or meaning of the claims be changed.

Thank You For Your Assistance

ROCHAUN JOHNSON
Certificates of Correction Branch
Tel. No. 703-308-9390 EXT 119

The request for issuing the above-identified correction(s) is hereby:
Note your decision on the appropriate box.

- ☑ **Approved** — **All** changes apply.
- ☐ **Approved in Part** — Specify below which changes **do not** apply.
- ☐ **Denied** — State the reasons for denial below.

Comments:

The changes are to matters of form only that do not change the scope of the claims or add any new matter.

[signature] 3636.

SPE **Art Unit**

PTOL-306 (REV. 7/03) U.S. DEPARTMENT OF COMMERCE Patent and Trademark Office

UNITED STATES PATENT AND TRADEMARK OFFICE

Commissioner for Patents
United States Patent and Trademark Office
P.O. Box 1450
Alexandria, VA 22313-1450
www.uspto.gov

FAY KAPLUN & MARCIN, LLP
150 BROADWAY, SUITE 702
NEW YORK, NY 10038

COPY MAILED

SEP 2 2 2009

OFFICE OF PETITIONS

In re Application of	:	
Kristian Dimatteo	:	
Application No. 10/390,315	:	ON PETITION
Filed: March 17, 2003	:	
Attorney Docket No. 10123/01601	:	

This is a decision on the petition under the unintentional provisions of 37 CFR 1.137(b), filed August 11, 2009, to revive the above-identified application.

The petition is **GRANTED**.

The application became abandoned for failure to timely file a reply within the meaning of 37 CFR 1.113 to the final Office action of December 23, 2008. The proposed reply required for consideration of a petition to revive must be a Notice of Appeal (and appeal fee required by 37 CFR 41.20(b)(2), an amendment that prima facie places the application in condition for allowance, a Request for Continued Examination and submission (37 CFR 1.114), or the filing of a continuing application under 37 CFR 1.53(b). See MPEP 711.03(c)(II)(A)(2). No extensions of time pursuant to the provisions of 37 CFR 1.136(a) were obtained.

The petition satisfies the requirements of 37 CFR 1.137(b) in that petitioner has supplied (1) the reply in the form of a Request for Continued Examination (RCE), including the fee of $810 and the submission required by 37 CFR 1.114; (2) the petition fee of $1,620; and (3) an adequate statement of unintentional delay.

Telephone inquiries concerning this decision should be directed to Alicia Kelley at (571) 272-6059.

This application is being referred to Technology Center AU 3738 for processing of the RCE and for appropriate action by the Examiner in the normal course of business in accordance with 37 CFR 1.114.

/SDB/

Sherry D. Brinkley
Petitions Examiner
Office of Petitions

UNITED STATES PATENT AND TRADEMARK OFFICE

COMMISSIONER FOR PATENTS
UNITED STATES PATENT AND TRADEMARK OFFICE
P.O. BOX 1450
ALEXANDRIA, VA 22313-1450
www.uspto.gov

Paper No. 6

EVELYN H. MCCONATHY
DILWORTH PAXSON, LLP
3200 MELLON BANK CENTER
1735 MARKET STREET
PHILADELPHIA, PA 19103

COPY MAILED

OCT 2 9 2003

OFFICE OF PETITIONS

In re Application of	:	
Chen, et al.	:	
Application No. 10/390,362	:	ON PETITION
Filed: March 17, 2003	:	
Attorney Docket No. 22253-73973	:	

This is a decision on the papers styled, "Petition to Withdraw Erroneous Notice of Omitted Items And to Correct Filing Date of Application," filed on September 12, 2003, which has been treated as a Petition under 37 CFR 1.53, requesting that the above-identified application be accorded a filing date of March 17, 2003, including Figures 1-14, as described in the specification.

The application was filed on March 17, 2003. However, on May 19, 2003, the Office of Initial Patent Examination (OIPE) mailed a "Notice Of Omitted Item(s)" (Notice) that stated the application had not been accorded a filing date, and that the application was deposited without drawings.

In response, on September 12, 2003, the instant petition and fourteen (14) sheet of drawings containing Figures 1-14 as described in the specification were submitted. The papers were accompanied by a copy of applicant's postcard receipt that acknowledges receipt of fourteen (14) sheets of drawings on March 17, 2003. A review of the application file indicates the presence of zero (0) sheets of drawings submitted on March 17, 2003. It is assumed that missing sheets of drawings containing Figures 1-14 were misplaced by the Office.

In view of the above, the petition is granted.

The $130.00 petition fee will be refunded to deposit account no. 50-0979.

This application will be returned to OIPE for further processing with a filing date of March 17, 2003, using the fourteen (14) sheets of drawings containing Figures 1-14 as described in the specification, supplied on September 12, 2003.

Telephone inquiries concerning this matter may be directed to the undersigned at (703) 306-9200.

Edward J. Tannouse
Petitions Attorney
Office of Petitions
United States Patent and Trademark Office

UNITED STATES PATENT AND TRADEMARK OFFICE

Commissioner for Patents
United States Patent and Trademark Office
P.O. Box 1450
Alexandria, VA 22313-1450
www.uspto.gov

Unisys Corporation
Attn; Lise A. Rode
Unisys Way, MS/E8-114
Blue Bell, PA 19424-0001

COPY MAILED

NOV 0 5 2004

OFFICE OF PETITIONS

In re Application of :
Keith D. Mease, et al. :
Application No. 10/390,370 :
Filed: March 17, 2003 :
Attorney Docket No. TN287 :

ON PETITION

This is a decision on the petition under 37 CFR 1.313(c)(2), filed November 4, 2004 to withdraw the above-identified application from issue after payment of the issue fee.

It does not appear that the instant petition is signed by an attorney of record. However, in accordance with 37 CFR 1.34(a), the signature of Christopher M. Spletzer appearing on the correspondence shall constitute a representation to the United States Patent and Trademark Office that he is authorized to represent the particular party on whose behalf he acts. However, if Mr. Spletzer desires to receive correspondence regarding this file, the appropriate power of attorney documentation must be submitted. A courtesy copy of this decision is being mailed to Mr. Spletzer, the petitioner herein. However, until otherwise instructed, all future correspondence regarding this application file will be directed solely to the above-noted correspondence address of record.

The petition is **GRANTED**.

The above-identified application is withdrawn from issue for consideration of a submission under 37 CFR 1.114 (request for continued examination) filed January 12, 2004. See 37 CFR 1.313(c)(2).

Petitioner is advised that the issue fee paid on September 28, 2004, in the above-identified application cannot be refunded. If, however, the above-identified application is again allowed, petitioner may request that it be applied towards the issue fee required by the new Notice of Allowance.[1]

[1]The request to apply the issue fee to the new Notice may be satisfied by completing and returning the new Issue Fee Transmittal Form PTOL-85(b), which includes the following language thereon: []Commissioner for Patents is requested to apply the Issue Fee and Publication Fee (if any) or re-apply any previously paid issue fee to the application identified above.[] Petitioner is advised that, whether a fee is indicated as being due or not, the Issue Fee Transmittal Form **must** be completed and timely submitted to avoid abandonment. Note the language in bold text on the first page of the Notice of Allowance and Fee(s) Due (PTOL-85).

Telephone inquiries relating to this decision should be directed to the undersigned at (571) 272-3204.

The application is being forwarded to Technology Center AU 2835 for further processing of the request for continued examination under 37 CFR 1.114 filed November 4, 2004.

Sherry D. Brinkley
Petitions Examiner
Office of Petitions
Office of the Deputy Commissioner
for Patent Examination Policy

cc: CHRISTOPHER M. SPLETZER
RATNERPRESTIA
P O BOX 980
VALLEY FORGE, PA 19482-0980

UNITED STATES PATENT AND TRADEMARK OFFICE

Commissioner for Patents
United States Patent and Trademark Office
P.O. Box 1450
Alexandria, VA 22313-1450
www.uspto.gov

Michael Gurin
4132 Cove Lane, Unit A
Glenview IL 60025

COPY MAILED

AUG 0 1 2007

OFFICE OF PETITIONS

In re Application of	:	
Michael H. Gurin et al.	:	
Application No. 10/390,393	:	ON PETITION
Filed: March 18, 2003	:	
Attorney Docket No.	:	

This is a decision on the petition under the unintentional provisions of 37 CFR 1.137(b), filed December 13, 2006, to revive the above-identified application.

The petition is **DISMISSED**.

Any request for reconsideration of this decision must be submitted within TWO (2) MONTHS from the mail date of this decision. Extensions of time under 37 CFR 1.136(a) are permitted. The reconsideration request should include a cover letter entitled "Renewed Petition under 37 CFR 1.137(b)." This is **not** a final agency action within the meaning of 5 U.S.C. § 704.

The application became abandoned for failure to timely file a reply within the meaning of 37 CFR 1.113 to the final Office action of October 20, 2005. The proposed reply required for consideration of a petition to revive must be a Notice of Appeal (and appeal fee required by 37 CFR 41.20(b)(2)), an amendment that prima facie places the application in condition for allowance, a Request for Continued Examination (RCE) and submission (37 CFR 1.114), or the filing of a continuing application under 37 CFR 1.53(b). See MPEP 711.03(c)(III)(A)(2). Since the amendment submitted does not prima facie place the application in condition for allowance, the reply required must be a Notice of Appeal (and appeal fee), RCE, or the filing of a continuing application under 37 CFR 1.53(b).

A grantable petition under 37 CFR 1.137(b) must be accompanied by: (1) the required reply, unless previously filed; (2) the petition fee as set forth in 37 CFR 1.17(m); (3) a statement that the entire delay in filing the required reply from the due date for the reply until the filing of a grantable petition pursuant to 37 CFR 1.137(b) was unintentional; and (4) any terminal disclaimer (and fee as set forth in 37 CFR 1.20(d)) required by 37 CFR 1.137(d). Where there is a question as to whether either the abandonment or the delay in filing a petition under 37 CFR 1.137 was unintentional, the Director may require additional information. See MPEP 711.03(c)(II)(C) and (D). The instant petition lacks item(s) (1). The Amendment submitted to the Examiner on July 12, 2006 failed to place the above-identified application in prima facie condition for allowance. Petitioner must submit one of the above documents in order to revive the above-identified application.

The Advisory Action issued by the Examiner is enclosed.

Further correspondence with respect to this matter should be addressed as follows:

By Mail: Mail Stop PETITION
Commissioner for Patents
P. O. Box 1450
Alexandria, VA 22313-1450

By hand: U. S. Patent and Trademark Office
Customer Service Window, Mail Stop Petitions
Randolph Building
401 Dulany Street
Alexandria, VA 22314

The centralized facsimile number is **(571) 273-8300.**

Telephone inquiries concerning this decision should be directed to the undersigned at (571) 272-2991.

Liana Walsh
Petitions Examiner
Office of Petitions

Advisory Action Before the Filing of an Appeal Brief	Application No.	Applicant(s)	
	10/390,393	GURIN, MICHAEL H.	
	Examiner	Art Unit	
	Kallambella Vijayakumar	1751	

--The MAILING DATE of this communication appears on the cover sheet with the correspondence address --

THE REPLY FILED 12 August 2006 FAILS TO PLACE THIS APPLICATION IN CONDITION FOR ALLOWANCE.

1. ☒ The reply was filed after a final rejection, but prior to or on the same day as filing a Notice of Appeal. To avoid abandonment of this application, applicant must timely file one of the following replies: (1) an amendment, affidavit, or other evidence, which places the application in condition for allowance; (2) a Notice of Appeal (with appeal fee) in compliance with 37 CFR 41.31; or (3) a Request for Continued Examination (RCE) in compliance with 37 CFR 1.114. The reply must be filed within one of the following time periods:
   a) ☒ The period for reply expires 6 months from the mailing date of the final rejection.
   b) ☐ The period for reply expires on: (1) the mailing date of this Advisory Action, or (2) the date set forth in the final rejection, whichever is later. In no event, however, will the statutory period for reply expire later than SIX MONTHS from the mailing date of the final rejection.

   Examiner Note: If box 1 is checked, check either box (a) or (b). ONLY CHECK BOX (b) WHEN THE FIRST REPLY WAS FILED WITHIN TWO MONTHS OF THE FINAL REJECTION. See MPEP 706.07(f).

Extensions of time may be obtained under 37 CFR 1.136(a). The date on which the petition under 37 CFR 1.136(a) and the appropriate extension fee have been filed is the date for purposes of determining the period of extension and the corresponding amount of the fee. The appropriate extension fee under 37 CFR 1.17(a) is calculated from: (1) the expiration date of the shortened statutory period for reply originally set in the final Office action; or (2) as set forth in (b) above, if checked. Any reply received by the Office later than three months after the mailing date of the final rejection, even if timely filed, may reduce any earned patent term adjustment. See 37 CFR 1.704(b).

NOTICE OF APPEAL

2. ☐ The Notice of Appeal was filed on _____. A brief in compliance with 37 CFR 41.37 must be filed within two months of the date of filing the Notice of Appeal (37 CFR 41.37(a)), or any extension thereof (37 CFR 41.37(e)), to avoid dismissal of the appeal. Since a Notice of Appeal has been filed, any reply must be filed within the time period set forth in 37 CFR 41.37(a).

AMENDMENTS

3. ☒ The proposed amendment(s) filed after a final rejection, but prior to the date of filing a brief, will not be entered because
   (a) ☒ They raise new issues that would require further consideration and/or search (see NOTE below);
   (b) ☐ They raise the issue of new matter (see NOTE below);
   (c) ☐ They are not deemed to place the application in better form for appeal by materially reducing or simplifying the issues for appeal; and/or
   (d) ☐ They present additional claims without canceling a corresponding number of finally rejected claims.

   NOTE: *See Continuation Sheet*. (See 37 CFR 1.116 and 41.33(a)).
4. ☐ The amendments are not in compliance with 37 CFR 1.121. See attached Notice of Non-Compliant Amendment (PTOL-324).
5. ☐ Applicant's reply has overcome the following rejection(s): _____.
6. ☐ Newly proposed or amended claim(s) _____ would be allowable if submitted in a separate, timely filed amendment canceling the non-allowable claim(s).
7. ☒ For purposes of appeal, the proposed amendment(s): a) ☒ will not be entered, or b) ☐ will be entered and an explanation of how the new or amended claims would be rejected is provided below or appended.
   The status of the claim(s) is (or will be) as follows:
   Claim(s) allowed: _____.
   Claim(s) objected to: *2,3,8,10 and 21-25*.
   Claim(s) rejected: *1,5,6,9-12 and 17-19*.
   Claim(s) withdrawn from consideration: _____.

AFFIDAVIT OR OTHER EVIDENCE

8. ☐ The affidavit or other evidence filed after a final action, but before or on the date of filing a Notice of Appeal will not be entered because applicant failed to provide a showing of good and sufficient reasons why the affidavit or other evidence is necessary and was not earlier presented. See 37 CFR 1.116(e).
9. ☐ The affidavit or other evidence filed after the date of filing a Notice of Appeal, but prior to the date of filing a brief, will not be entered because the affidavit or other evidence failed to overcome all rejections under appeal and/or appellant fails to provide a showing a good and sufficient reasons why it is necessary and was not earlier presented. See 37 CFR 41.33(d)(1).
10. ☐ The affidavit or other evidence is entered. An explanation of the status of the claims after entry is below or attached.

REQUEST FOR RECONSIDERATION/OTHER

11. ☐ The request for reconsideration has been considered but does NOT place the application in condition for allowance because: _____.
12. ☐ Note the attached Information Disclosure Statement(s). (PTO/SB/08) Paper No(s). _____
13. ☐ Other: _____.

Douglas McGinty
DOUGLAS MCGINTY
SUPERVISORY PATENT EXAMINER
1751

Continuation of 3. NOTE: The claims as amended encompass the limitation of a metal oxide nanoparticle having a coating from about one monolayer to about three monolayers that was not part of the original claims, requires further search and for further consideration.

UNITED STATES PATENT AND TRADEMARK OFFICE

Commissioner for Patents
United States Patent and Trademark Office
P.O. Box 1450
Alexandria, VA 22313-1450
www.uspto.gov

Kuo Hsin Chen
PO Box 10-69, Chong Ho
Taipei, 235
TAIWAN
AIR MAIL

COPY MAILED

JAN 1 5 2004

OFFICE OF PETITIONS

In re Application of Kuo Hsin Chen Application No. 10/390,403 Filed: March 12, 2003 Attorney Docket No. 139AAA	DECISION GRANTING PETITION

This is a decision on the petition filed June 26, 2003, requesting that the above-identified application be accorded a filing date of March 12, 2003, with Figures 9 and 10 as part of the original disclosure. The present petition was recently forwarded to the Office of Petitions for a decision on the merits. The Office sincerely apologizes for any inconvenience.

On March 12, 2003, applicant filed the above-identified application. On May 22, 2003, the Office of Initial Patent Examination mailed a Notice of Omitted Item(s) in a Nonprovisional Application, stating that the application had been accorded a filing date of March 12, 2003, and advising applicant that Figures 9 and 10 appeared to have been omitted.

In response, on June 26, 2003, applicant filed the present petition and a copy of seven (7) sheets of drawings (Figures 1-10). Additionally, applicant submitted a copy of the date-stamp postcard receipt, acknowledging receipt of 7 sheets of drawings consisting of 10 Figures on March 12, 2003.

Upon review of the record, Figures 9 and 10, filed on March 12, 2003, have been located among the application papers. Therefore, the application, including Figures 9 and 10, was complete on filing and will be granted a filing date of March 12, 2003.

Accordingly, the petition is granted. The Notice of May 22, 2003, was sent in error and is hereby withdrawn. The $130.00 petition fee will be refunded by treasury check.

The Office of Initial Patent Examination is directed to process the above-identified application with a filing date of March 12, 2003, using Figures 9 and 10 submitted on filing.

Any inquiries related to this decision should be directed to the undersigned at (703) 306-5589.

Christina Tartera Donnell

Christina Tartera Donnell
Senior Petitions Attorney
Office of Petitions

UNITED STATES PATENT AND TRADEMARK OFFICE

COMMISSIONER FOR PATENTS
UNITED STATES PATENT AND TRADEMARK OFFICE
P.O. BOX 1450
ALEXANDRIA, VA 22313-1450
www.uspto.gov

MORGAN, LEWIS & BOCKIUS LLP (SF)
2 PALO ALTO SQUARE
3000 El Camino Real, Suite 700
PALO ALTO, CA 94306

COPY MAILED
SEP 13 2006
OFFICE OF PETITIONS

In re Application of:	:	
Solow-Cordero et al.	:	
Application No. 10/390,427	:	DECISION ON
Filed: March 14, 2003	:	PETITION
Attorney Docket Number:	:	
10602-049-999	:	

This is a decision in response to the Petition under 37 CFR 1.137(b), filed January 17, 2006, to revive the above-identified application.

This Petition is hereby **granted**.

The above-identified application became abandoned for failure to timely and properly reply to the Office Communication mailed April 21, 2005. The Office Communication set a one (1) month period for reply, and also provided for extensions of time under 37 CFR 1.136(a). No reply having been received, the application became abandoned May 22, 2005. A Notice of Abandonment was mailed December 5, 2005.

With the instant petition, Petitioner has filed a Response to the Office communication. Accordingly, the petition is granted.

This application is being forwarded to Technology Center Art Unit 1614 for processing of the Response in due course.

Telephone inquiries concerning this decision should be directed to the undersigned at (571) 272-3232.

Derek L. Woods
Attorney
Office of Petitions

UNITED STATES PATENT AND TRADEMARK OFFICE

Commissioner for Patents
United States Patent and Trademark Office
P.O. Box 1450
Alexandria, VA 22313-1450
www.uspto.gov

MORGAN, LEWIS & BOCKIUS LLP (SF)
2 PALO ALTO SQUARE
3000 EL CAMINO REAL, SUITE 700
PALO ALTO CA 94306

COPY MAILED

FEB 1 2 2008

OFFICE OF PETITIONS

In re Application of :

SOLOW-CORDERO, David et al. :
Application No. 10/390,427 : DECISION ON PETITION
Filed: March 14, 2003 : TO WITHDRAW
Attorney Docket No. **61030-0049-US** : FROM RECORD
:

This is a decision on the Request to Withdraw as attorney or agent of record under 37 C.F.R. § 1.36(b), filed May 16, 2007 and re-submitted on November 16, 2007.

The request is **NOT APPROVED**.

A grantable request to withdraw as attorney/agent of record must be signed by every attorney/agent seeking to withdraw or contain a clear indication that one attorney is signing on behalf of another/others. A request to withdraw will not be approved unless at least 30 (thirty) days would remain between the date of approval and the later of the expiration date of a time to file a response or the expiration date of the maximum time period which can be extended under 37 C.F.R. § 1.136(a).

The Office cannot approve the request at this time since the reasons provided do not meet any of the conditions under the mandatory or permissive categories enumerated in 37 CFR 10.40. Section 10.40 of Title 37 of the Code of Federal Regulation states, "[a] practitioner shall not withdraw from employment in a proceeding before the Office without permission from the Office[.]" More specifically, 37 CFR 10.40 states, "[i]f paragraph (b) of this section is not applicable, a practitioner may not request permission to withdraw in matter pending before the Office unless such request or such withdrawal is" for one the permissive reasons listed in 37 CFR 10.40(c). The reasons set forth in the request, applicants are not interested in continuing prosecution of application, does not meet any the conditions set forth in 37 CFR 10.40.

All future communications from the Office will continue to be directed to the above-listed address until otherwise notified by applicant.

Telephone inquiries concerning this decision should be directed to Tredelle Jackson at 571-272- 2783.

Monica A. Graves
Petitions Examiner
Office of Petitions

cc: **CHARLES GLUCHOWSKI, PHD**
PRESIDENT
LIFE/SCIENC INNOVATIONS LLC
154 COOSPRING CT.
DANVILLE, CA 94506

UNITED STATES PATENT AND TRADEMARK OFFICE

Commissioner for Patents
United States Patent and Trademark Office
P.O. Box 1450
Alexandria, VA 22313-1450
www.uspto.gov

Heidi M. Berven
Warner-Lambert Company, LLC
2800 Plymouth Road
Ann Arbor, MI 48105

COPY MAILED

APR 1 3 2004

OFFICE OF PETITIONS

In re Application of :
Stephen A. Fakhoury, et al :
Application No. 10/390,465 :
Filed: March 17, 2003 :
Attorney Docket No. PC25012A :

ON PETITION

This is a decision on the petition under 37 CFR 1.313(c)(3) to withdraw the above-identified application from issue after payment of the issue fee, filed by facsimile transmission on April 5, 2004.

It does not appear that the instant petition is signed by an attorney of record. However, in accordance with 37 CFR 1.34(a), the signature of Elsa Djuardi appearing on the correspondence shall constitute a representation to the United States Patent and Trademark Office that she is authorized to represent the particular party in whose behalf she acts. However, if Attorney Djuardi desires to receive correspondence regarding this file, the appropriate power of attorney documentation must be submitted. A courtesy copy of this decision is being mailed to Attorney Djuardi, the petitioner herein. However, until otherwise instructed, all future correspondence regarding this application file will be directed solely to the above-noted correspondence address of record.

The petition is **DISMISSED as moot**.

Unfortunately, the petition was not received by the appropriate official for a decision until after April 6, 2004, the date upon which the above-identified application issued as U.S. Patent No. 6,716,842.

While petitions to withdraw from issue may be faxed to the to the Central Facsimile Number, as was done in this case, applicants were cautioned to hand carry petitions to withdraw from issue to the Office of Petitions to allow sufficient time to process the petition. (See *Centralized Delivery and Facsimile Transmission Requirements for Patent Application Related Correspondence, 1275 Off. Gaz. Pat. Office 200* (Oct. 28, 2003)).

Petitioner attention is also directed to 37 CFR 1.313(d) which states that "A petition under this section [37 CFR 1.313(c)] will not be effective to withdraw the application from issue unless it is actually received and granted by the appropriate officials **before the date of issue**." In this case, the petition was not received in the Office of Petitions for consideration until April 12, 2004.

The Request for Continued Examination (RCE) deposited on April 1, 2004, is considered an improper submission under 37 CFR 1.114. Accordingly, the RCE and accompanying Information Disclosure Statement (IDS) will be placed in the file of the above-identified patent without further consideration. Under the circumstances, the $770 filing fee for the improper RCE will be refunded to counsel's deposit account.

Thereafter, the patented file will be forwarded to Files Repository.

Telephone inquiries concerning this matter may be directed to the undersigned at (703) 305-9220.

Sherry D. Brinkley
Petitions Examiner
Office of Petitions
Office of the Deputy Commissioner
for Patent Examination Policy

cc: Elsa Djuardi
Agouron Pharmaceuticals, Inc.,/A. Pfizer Company
Patent Department
10777 Science Center Drive
San Diego, CA 92121

UNITED STATES PATENT AND TRADEMARK OFFICE

Commissioner for Patents
United States Patent and Trademark Office
P.O. Box 1450
Alexandria, VA 22313-1450
www.uspto.gov

Mailed: 9/22/05

caf
Paper Number _____

In re application of		:	
	Mohla et al.	:	DECISION ON
Serial No.	10/390,468	:	PETITION
Filed:	March 17, 2003	:	
For:	METHOD FOR PRODUCING SILICON BASED	:	
	ALLOYS IN ATOMIZED FORM	:	

This is a response to the PETITION TO WITHDRAW HOLDING OF ABANDONMENT BASED ON FAILURE TO RECEIVE OFFICE ACTION filed on January 10, 2005. The petition requests that the abandonment, as set forth in the Notice of Abandonment mailed December 30, 2004, be withdrawn since the applicant did not receive the Office Action mailed April 15, 2004.

DECISION

Since the petitioner asserts that the applicant did not receive the Office Action mailed April 15, 2004, the request is accepted as a petition under 37 C.F.R. § 1.181 (no fee) and is evaluated under the procedures regarding an acceptable showing of non-receipt of an office action, TMOG 1156 O.G. 53, November 16, 1993, (see also MPEP 711.02 - NEW PROCEDURE TMOG 1170 O.G. 114).

As set forth in MPEP § 711.03(c) - PETITION TO WITHDRAW HOLDING OF ABANDONMENT BASED ON FAILURE TO RECEIVE OFFICE ACTION:

> "The showing required to establish the nonreceipt of an Office communication **must include a statement from the practitioner** stating that the Office communication was not received by the practitioner and **attesting to the fact that a search of the file jacket** and docket records indicates that the Office communication was not received. **A copy of the docket record where the nonreceived Office communication would have been entered had it been received and docketed must be attached to and referenced in the practitioner's statement**." (emphasis added)

The evidence presented by the petitioner fails to comply with the requirements set forth in MPEP § 711.03(c). The evidence presented is insufficient to establish that the Office Action mailed April 15, 2004 was not received at the correspondence address. The evidence provided includes a statement by Gregory W. Schott of Globe Metallurgical that the Office Action mailed April 15, 2004 was not received. The instant petition does not contain a statement attesting that a search of the file jacket was made, and the results of such a search revealed that the office communication was not received as is required by MPEP § 711.03(c) nor does it include a copy of the docket record where the nonreceived Office communication would have been entered had it been received and docketed must be attached to and referenced in the practitioner's statement.

Therefore, the status of this application remains ABANDONED.

The Petition is **DISMISSED**.

Jacqueline M. Stone

Jacqueline Stone, Director
Technology Center 1700
Chemical and Materials Engineering

IP Department of Piper Rudnick LLP
One Liberty Place
1650 Market Street, Suite 4900
Philadelphia, PA 19103

UNITED STATES PATENT AND TRADEMARK OFFICE

Commissioner for Patents
United States Patent and Trademark Office
P.O. Box 1450
Alexandria, VA 22313-1450
www.uspto.gov

IP GROUP OF DLA PIPER RUDNICK GRAY CARY US
1650 MARKET ST, SUITE 4900
PHILADELPHIA, PA 19103

COPY MAILED

NOV 2 3 2005

OFFICE OF PETITIONS

In re Application of	:	
Prem P. Mohla et al	:	
Application No. 10/390,468	:	ON PETITION
Filed: March 17, 2003	:	
Attorney Docket No. 1230-03 (17835/9)	:	

This is a decision on the petition under 37 CFR 1.137(b), filed October 24, 2005, to revive the above-identified application.

The petition is **GRANTED**.

The above-identified application became abandoned for failure to reply in a timely manner to the non-final Office action mailed April 15, 2004, which set a shortened statutory period for reply of three (3) months. No extensions of time under the provisions of 37 CFR 1.136(a) were obtained. Accordingly, the above-identified application became abandoned on July 16, 2004.

The petition satisfies the conditions for revival pursuant to the provisions of 37 CFR 1.137(b) in that (1) the reply in the form of an Amendment; (2) the petition fee; and (3) the required statement of unintentional delay have been received. Accordingly, the reply to the non-final Office action of April 15, 2004 is accepted as having been unintentionally delay.

Telephone inquiries concerning this decision should be directed to Wan Laymon at (571) 272-3220.

This matter is being referred to Technology Center AU 1742.

Wan Laymon
Petitions Examiner
Office of Petitions

UNITED STATES PATENT AND TRADEMARK OFFICE

COMMISSIONER FOR PATENTS
UNITED STATES PATENT AND TRADEMARK OFFICE
P.O. BOX 1450
ALEXANDRIA, VA 22313-1450
www.uspto.gov

SWANSON & BRATSCHUN L.L.C.
1745 SHEA CENTER DRIVE
SUITE 330
HIGHLANDS RANCH, CO 80129

COPY MAILED
MAR 2 2 2007
OFFICE OF PETITIONS

In re Patent No. 7,038,038	:	
Issue Date: May 2, 2006	:	
Application No. 10/390,526	:	ON PETITION
Filed: March 17, 2003	:	
Attorney Docket No. PHAR.01	:	

This is a decision on the petition filed November 7, 2006, which is being treated as a request under 37 CFR 3.81(b)[1] to correct the name of the assignee on the front page of the above-identified patent by way of a Certificate of Correction.

The request is **GRANTED**.

Telephone inquiries concerning this decision may be directed to the undersigned at (571) 272-3204. Inquiries regarding the issuance of a certificate of correction should be directed to the Certificates of Correction Branch at (571) 272-4200.

The Certificates of Correction Branch will be notified of this decision granting the petition under 37 CFR 3.81(b) and directing issuance of the requested Certificate of Correction.

Sherry D. Brinkley
Petitions Examiner
Office of Petitions

[1] *See* MPEP 1309, subsection II; and Official Gazette of June 22, 2004.

UNITED STATES PATENT AND TRADEMARK OFFICE

COMMISSIONER FOR PATENTS
UNITED STATES PATENT AND TRADEMARK OFFICE
P.O. BOX 1450
ALEXANDRIA, VA 22313-1450
www.uspto.gov

Paper No. 7

HAMILTON, BROOK, SMITH & REYNOLDS, P.C.
530 VIRGINIA ROAD
P.O. BOX 9133
CONCORD, MA 01742-9133

COPY MAILED

OCT 2 2 2003

OFFICE OF PETITIONS

In re Application of
Bing Chiang, Christopher Snyder, Griffin Gothard and David Jorgenson
Application No. 10/390,531
Filed: March 14, 2003
Attorney Docket Number: 2479.2154-001
Title of Invention: MOBILE COMMUNICATION HANDSET WITH ADAPTIVE ANTENNA ARRAY

DECISION GRANTING STATUS UNDER 37 CFR 1.47(a)

This is in response to the petition under 37 CFR 1.47(a), filed September 25, 2003.

The petition is GRANTED.

Petitioner has shown that the non-signing inventor has refused to join in the filing of the above-identified application after having been presented with the application papers. The petition attest a copy of the application was sent to non-signing inventor's last known address. The non-signing inventor's failure to respond to the application mailing sufficiently establishes that he refuses to execute the application papers.

The above-identified application and papers have been reviewed and found in compliance with 37 CFR 1.47(a). This application is hereby accorded Rule 1.47(a) status.

As provided in Rule 1.47(c), this Office will forward notice of this application's filing to the non-signing inventor at the address given in the petition. Notice of the filing of this application will also be published in the Official Gazette.

This application is being forwarded to the Office of Initial Patent Examination for further processing.

Telephone inquiries related to this decision may be directed to the undersigned at (703) 306-0251.

Charlema R. Grant

Charlema R. Grant
Petitions Attorney
Office of Petitions

UNITED STATES PATENT AND TRADEMARK OFFICE

COMMISSIONER FOR PATENTS
UNITED STATES PATENT AND TRADEMARK OFFICE
P.O. BOX 1450
ALEXANDRIA, VA 22313-1450
www.uspto.gov

Christopher A. Snyder
2539 Canary Isles Drive
Melbourne, Florida 32901-6820

In re Application of
Bing Chiang, Christopher Snyder, Griffin Gothard and David Jorgenson
Application No. 10/390,531
Filed: March 14, 2003
Attorney Docket Number: 2479.2154-001
Title of Invention: MOBILE COMMUNICATION HANDSET WITH ADAPTIVE ANTENNA ARRAY

LETTER

COPY MAILED

OCT 2 2 2003

OFFICE OF PETITIONS

Dear Mr. Snyder:

You are named as a joint inventor in the above-identified United States patent application filed under the provisions of 35 U.S.C. 116 (United States Code) and 37 C.F.R. § 1.47(a), Rules of Practice in Patent Cases. Should a patent be granted on the application you will be designated therein as a joint inventor.

As a named inventor you are entitled to inspect any paper in the file wrapper of the application, order copies of all or any part thereof (at a prepaid cost as per 37 C.F.R. § 1.19) or make your position of record in the application. Alternatively, you may arrange to do any of the preceding through a registered patent attorney or agent presenting written authorization from you. If you care to join the application, applicant (see below) would presumably assist you. Joining in the application would entail the filing of an appropriate oath or declaration by you pursuant to 37 C.F.R. § 1.63.

Telephone inquiries regarding this communication should be directed to Petitions Attorney Charlema R. Grant at (703) 306-0251. Requests for information regarding your application should be directed to the File Information Unit at (703) 308-2733. Information regarding how to pay for and order a copy of the application, or a specific paper in the application, should be directed to Certification Division at (703) 308-9726 or 1-800-972-6382 (outside the Washington D.C. area).

Charlema R. Grant
Petitions Attorney
Office of Petitions

Todd A Gerety
HAMILTON, BROOK, SMITH & REYNOLDS, P.C.
530 VIRGINIA ROAD
P.O. BOX 9133
CONCORD MA 01742-9133

SPE RESPONSE FOR CERTIFICATE OF CORRECTION

Paper No.: _____

DATE : 5-18-05

TO SPE OF : ART UNIT 2828

SUBJECT : Request for Certificate of Correction on Patent No.: 6876331

A response is requested with respect to the accompanying request for a certificate of correction.

Please complete this form and return with file, within 7 days to:
Certificates of Correction Branch - PK 3-915
Palm location **7580** - Tel. No. 305-8309

With respect to the change(s) requested, correcting Office and/or Applicant's errors, should the patent read as shown in the certificate of correction? No new matter should be introduced, nor should the scope or meaning of the claims be changed.

Check spec.

Thank You For Your Assistance

Certificates of Correction Branch

The request for issuing the above-identified correction(s) is hereby:
Note your decision on the appropriate box.

- ☐ **Approved** — All changes apply.
- ☒ **Approved in Part** — Specify below which changes **do not** apply.
- ☐ **Denied** — State the reasons for denial below.

Comments:

There is no change in column 10, line 57.
The change should be in column 12, line 57.
(The change in column 14, line 7 is approved.)

MINSUN OH HARVEY
PRIMARY EXAMINER

SPE

2828

Art Unit

PTOL-306 (REV. 7/03)

U.S. DEPARTMENT OF COMMERCE Patent and Trademark Office

UNITED STATES PATENT AND TRADEMARK OFFICE

Commissioner for Patents
United States Patent and Trademark Office
P.O. Box 1450
Alexandria, VA 22313-1450
www.uspto.gov

ROCKWELL COLLINS, INC.
INTELLECTUAL PROPERTY DEPARTMENT
400 COLLINS ROAD NE
M/S 124-323
CEDAR RAPIDS IA 52498

COPY MAILED

JUL 22 2004

OFFICE OF PETITIONS

In re Application of	:	
Michael Jones et al	:	
Application No. 10/390,543	:	DECISION GRANTING PETITION
Filed: March 14, 2003	:	UNDER 37 CFR 1.137(b)
Attorney Docket No. 01CR051/KE	:	

This is a decision on the petition, filed May 11, 2004, which is being treated as a petition under 37 CFR 1.137(b) to revive the instant nonprovisional application for failure to timely notify the U.S. Patent and Trademark (USPTO) of the filing of an application in a foreign country, or under a multinational treaty that requires publication of applications eighteen months after filing. *See* 37 CFR 1.137(f).

The petition is **GRANTED**.

Petitioner states that the instant nonprovisional application is the subject of an application filed in an eighteen month publication country on March 5, 2004. However, the USPTO was unintentionally not notified of this filing within 45 days subsequent to the filing of the subject application in an eighteen month publication country.

In view of the above, this application became abandoned pursuant to 35 U.S.C. § 122(b)(2)(B)(iii) and 37 CFR 1.213(c) for failure to timely notify the Office of the filing of an application in a foreign country or under a multilateral international agreement that requires publication of applications 18 months after filing.

A petition to revive an application abandoned pursuant to 35 U.S.C. 122(b)(2)(B)(iii) for failure to notify the USPTO of a foreign filing must be accompanied by:

(1) the required reply which is met by the notification of such filing in a foreign country or under a multinational treaty;
(2) the petition fee as set forth in 37 CFR 1.17(m); and
(3) a statement that the entire delay in filing the required reply from the due date of the reply until the filing of a grantable petition was unintentional.

The instant petition has been found to be in compliance with 37 CFR 1.137(b). Accordingly, the failure to timely notify the USPTO of a foreign or international filing within 45 days after the date of filing of such foreign or international application as provided by 35 U.S.C. § 122(b)(2)(B)(iii) and 37 CFR 1.213(c) is accepted as having been unintentionally delayed.

The previous Request and Certification under 35 U.S.C. § 122(b)(2)(B)(i) has been rescinded. A Filing Receipt which sets forth the projected publication date of September 16, 2004 accompanies this decision on petition.

There is no indication that the person signing the instant petition was ever given a power of attorney or authorization of agent to prosecute the above-identified application. If the person signing the instant petition desires to receive future correspondence regarding this application, the appropriate power of attorney or authorization of agent must be submitted. While a courtesy copy of this decision is being mailed to the person signing the instant petition, all future correspondence will be directed to the address of currently of record until such time as appropriate instructions are received to the contrary.

Any inquiries concerning this decision may be directed to the undersigned at (703) 305-8859.

This application is being referred to Technology Center Art Unit 2873.

Karen Creasy

Karen Creasy
Petitions Examiner
Office of Petitions
Office of the Deputy Commissioner
for Patent Examination Policy

ATTACHMENT: Filing Receipt

cc:

JOSEPH N. ZIEBERT
U.S. BANK BLDG.
777 E. WISCONSIN AVENUE
MILWAUKEE, WI 53202

UNITED STATES PATENT AND TRADEMARK OFFICE

COMMISSIONER FOR PATENTS
UNITED STATES PATENT AND TRADEMARK OFFICE
P.O. BOX 1450
ALEXANDRIA, VA 22313-1450
www.uspto.gov

PATTERSON, THUENTE, SKAAR & CHRISTENSEN, P.A.
4800 IDS CENTER
80 SOUTH 8TH STREET
MINNEAPOLIS MN 55402-2100

COPY MAILED
SEP 15 2006
OFFICE OF PETITIONS

In re Application of	:
Simpson	: DECISION ON APPLICATION
Application No. 10/390,550	: FOR
Filed: March 17, 2003	: PATENT TERM ADJUSTMENT
Atty. Dkt. No. 2914.16US02	:

This is a decision on the "APPLICATION FOR PATENT TERM ADJUSTMENT INCLUDING REQUEST FOR RECONSIDERATION OF PATENT TERM ADJUSTMENT INDICATED ON NOTICE OF ALLOWANCE PURSUANT TO 37 CFR § 1.705," filed May 24, 2006, requesting that the initial determination of patent term adjustment be corrected from one hundred one (101) days to three hundred seventy-two (372) days.

The application for patent term adjustment is **GRANTED**.

RELEVANT STATUTES AND REGULATIONS

35 U.S.C. 154(b)(1)(A)(i) provides that:

— Subject to the limitations under paragraph (2), if the issue of an original patent is delayed due to the failure of the Patent and Trademark Office to—

(i) provide at least one of the notifications under section 132 of this title or a notice of allowance under section 151 of this title not later than 14 months after—

(i) the date on which an application was filed under section 111(a) of this title; or

(II) the date on which an international application fulfilled the requirements of section 371 of this title;

37 CFR § 1.702 provides that:

(a) Failure to take certain actions within specified time frames. Subject to the provisions of 35 U.S.C. 154(b) and this subpart, the term of an original patent shall be adjusted if the issuance of the patent was delayed due to the failure of the Office to:

(1) Mail at least one of a notification under 35 U.S.C. 132 or a notice of allowance under 35 U.S.C. 151 not later than fourteen months after the date on which the application was filed under 35 U.S.C. 111(a) or fulfilled the requirements of 35 U.S.C. 371 in an international application;

37 CFR § 1.703 provides, in pertinent part, that:

(a) The period of adjustment under § 1.702(a) is the sum of the following periods:

(1) The number of days, if any, in the period beginning on the day after the date that is fourteen months after the date on which the application was filed under 35 U.S.C. 111(a) or fulfilled the requirements of 35 U.S.C. 371 and ending on the date of mailing of either an action under 35 U.S.C. 132, or a notice of allowance under 35 U.S.C. 151, whichever occurs first;

OPINION

Applicant asserts that the PTA determination of 101 days is an error, due to an erroneous determination that the USPTO's August 26, 2004 Office communication constitutes a notification under 35 U.S.C. 132 and thereby fulfilled the USPTO's 14 month guarantee under 35 U.S.C. 154(b)(1)(A)(i) on such date. Alternatively, applicant asserts that even if the USPTO's August 26, 2004 Office communication constituted a notification under 35 U.S.C. 132, thereby fulfilling the USPTO's 14 month guarantee, the determination of 101 days is still in error due to an improper determination that the USPTO has fulfilled its 4-month guarantee under 35 U.S.C. 154(b)(1)(A)(ii).

Applicant's arguments have been considered, and found persuasive that the determination of 101 days is incorrect. Specifically, it is determined that the period of adjustment pursuant to § 1.702(a)(1) should not be based on the Office communication mailed August 26, 2004. This communication has been reviewed

and determined not to be an action issued as a result of the examination conducted pursuant to 35 U.S.C. 131. Rather, the period of adjustment should be based on the Office's mailing of a non-final Office action on May 24, 2005.

Accordingly, the period of adjustment is properly calculated as 372 days, counting the number of days beginning on May 17, 2004, the day after the date that is fourteen months after the date on which the application was filed, to May 24, 2005, the date of mailing of the non-final Office action. It is noted that given this conclusion, the Office was not under a four-month clock to respond to the preliminary amendment filed July 9, 2004.

In view thereof, the correct patent term adjustment at the time of mailing of the notice of allowance is three hundred seventy-two (372) days.

CONCLUSION

The Office acknowledges submission of the $200.00 fee set forth in 37 CFR 1.18(e). No additional fees are required.

The application file is being forwarded to the Office of Patent Publications for issuance of the patent. The patent term adjustment indicated on the patent (as shown on the Issue Notification mailed about three weeks prior to patent issuance) will include any additional adjustment accrued both for Office delay in issuing the patent more than four months after payment of the issue fee and satisfaction of all outstanding requirements, and for the Office taking in excess of three years to issue the patent (to the extent that the three-year period does not overlap with periods already accorded).

Telephone inquiries regarding this matter should be directed to the undersigned at (571) 272-3219.

Nancy Johnson
Senior Petitions Attorney
Office of Petitions

Enclosure: Copy of REVISED Pair Screen

Day : Thursday
Date: 9/14/2006

PALM INTRANET

Time: 15:01:19

PTA Calculations for Application: 10/390550			
Application Filing Date:	03/17/2003	PTO Delay (PTO):	101
Issue Date of Patent:		Three Years:	0
Pre-Issue Petitions:	0	Applicant Delay (APPL):	0
Post-Issue Petitions:	0	Total PTA (days):	372
PTO Delay Adjustment:	271		

File Contents History

Number	Date	Contents Description	PTO	APPL	START
46	09/14/2006	ADJUSTMENT OF PTA CALCULATION BY PTO		101	
45	09/14/2006	ADJUSTMENT OF PTA CALCULATION BY PTO	372		
38	02/21/2006	MAIL NOTICE OF ALLOWANCE			
37	02/21/2006	MAIL EXAMINER'S AMENDMENT			
36	02/10/2006	NOTICE OF ALLOWANCE DATA VERIFICATION COMPLETED			
35	02/10/2006	EXAMINER'S AMENDMENT COMMUNICATION			
34	02/06/2006	NOTICE OF ALLOWABILITY			
33	11/29/2005	DATE FORWARDED TO EXAMINER			
32	11/16/2005	RESPONSE TO ELECTION / RESTRICTION FILED			
31	11/16/2005	REQUEST FOR EXTENSION OF TIME - GRANTED			
30	09/28/2005	MAIL RESTRICTION REQUIREMENT			
29	09/26/2005	REQUIREMENT FOR RESTRICTION / ELECTION			
28	07/22/2005	DATE FORWARDED TO EXAMINER			
27	07/11/2005	RESPONSE AFTER NON-FINAL ACTION			
26	05/24/2005	MAIL NON-FINAL REJECTION			
25	05/16/2005	NON-FINAL REJECTION			
23	09/23/2004	PRELIMINARY AMENDMENT			
22	08/26/2004	MAIL MISCELLANEOUS COMMUNICATION TO APPLICANT	101		-1
21	08/02/2004	REFERENCE CAPTURE ON IDS			
20	08/02/2004	INFORMATION DISCLOSURE STATEMENT (IDS) FILED			
19	08/23/2004	MISCELLANEOUS ACTION WITH SSP			
18	07/09/2004	PRELIMINARY AMENDMENT			
17	07/09/2004	WORKFLOW INCOMING AMENDMENT IFW			

16	06/18/2004	CASE DOCKETED TO EXAMINER IN GAU			
15	06/18/2004	IFW TSS PROCESSING BY TECH CENTER COMPLETE			
14	10/08/2003	APPLICATION RETURN FROM OIPE			
13	10/08/2003	APPLICATION IS NOW COMPLETE			
12	10/08/2003	APPLICATION RETURN TO OIPE			
11	10/08/2003	APPLICATION DISPATCHED FROM OIPE			
10	10/08/2003	APPLICATION IS NOW COMPLETE			
9	07/14/2003	PAYMENT OF ADDITIONAL FILING FEE/PREEXAM			
8	03/17/2003	CLAIM PRELIMINARY AMENDMENT			
6	07/14/2003	A STATEMENT BY ONE OR MORE INVENTORS SATISFYING THE REQUIREMENT UNDER 35 USC 115, OATH OF THE APPLIC			
5	05/20/2003	NOTICE MAILED--APPLICATION INCOMPLETE--FILING DATE ASSIGNED			
2	04/04/2003	IFW SCAN & PACR AUTO SECURITY REVIEW			
1	03/17/2003	INITIAL EXAM TEAM NN			

Search Another: Application# Search

EXPLANATION OF PTA CALCULATION

EXPLANATION OF PTE CALCULATION

To go back use Back button on your browser toolbar.

Back to PALM | ASSIGNMENT | OASIS | Home page

UNITED STATES PATENT AND TRADEMARK OFFICE

Commissioner for Patents
United States Patent and Trademark Office
P.O. Box 1450
Alexandria, VA 22313-1450
www.uspto.gov

LACKENBACH SIEGEL LLP
LACKENBACH SIEGAL BUILDING
ONE CHASE ROAD
SCARSDALE, NY 10583

COPY MAILED

JAN 2 0 2006

OFFICE OF PETITIONS

In re Application of	:	
Spencer Krumholz	:	
Application No. 10/390,554	:	DECISION ON PETITION
Filed: March 17, 2003	:	TO MAKE SPECIAL UNDER
Attorney Docket No. P-6	:	37 CFR 1.102(d)
	:	

This is a decision on the petition under 37 CFR §1.102(d), filed November 25, 2005, to make the above-identified application special based on actual infringement as set forth in M.P.E.P. § 708.02, Section II.

The petition is **GRANTED.**

A grantable petition to make an application special under 37 CFR §1.102(d) and MPEP §708.02, Section II: Infringement, must be accompanied by the required fee pursuant to 37 CFR 1.17(h) and a statement by the applicant, assignee, or attorney/agent registered to practice before the office alleging:

> (A) That there is an infringing device or product actually on the market or method in use;
>
> (B) That a rigid comparison of the alleged infringing device, product, or method with the claims of the application has been made, and that, in his or her opinion, some of the claims are unquestionably infringed; and
>
> (C) That he or she has made or caused to be made a careful and thorough search of the prior art or has a good knowledge of the pertinent prior art.
>
> Applicant must provide one copy of each of the references deemed most closely related to the subject matter encompassed by the claims if said references are not already of record.

The petition complies with all the above stated requirements. Accordingly, the above-identified application has been accorded "special" status

Telephone inquiries concerning this decision should be directed to Irvin Dingle at 571-272-3210.

All other inquiries concerning either the examination or status of the application should be directed to the Technology Center.

The application is being forwarded to the Technology Center Art Unit 2875 for action on the merits commensurate with this decision.

Amelia Au
Petitions Examiner
Office of Petitions

UNITED STATES PATENT AND TRADEMARK OFFICE

Commissioner for Patents
United States Patent and Trademark Office
P.O. Box 1450
Alexandria, VA 22313-1450
www.uspto.gov

FROMMER LAWRENCE & HAUG
745 FIFTH AVENUE -10TH FL.
NEW YORK, NY 10151

COPY MAILED
OCT 27 2008

In re Patent No. 6,753,737
Issue Date: June 22, 2004
Application No. 10/390,557
Filed: March 17, 2003
Attorney Docket No. 336010-2008.1

ON PETITION

This is a decision on the petition under 37 CFR 1.378(c), filed August 14, 2008, to accept the unintentionally delayed payment of a maintenance fee for the above-identified patent.

The petition is **GRANTED**.

This patent expired on June 22, 2008 for failure to pay the three and one-half year maintenance fee. Since this petition was submitted within twenty-four months after the six-month grace period provided in 37 CFR 1.362(e), the petition was timely filed under the provisions of 37 CFR 1.378(c).

The maintenance fee is hereby accepted and the above-identified patent is reinstated as of the mail date of this decision.

Telephone inquiries concerning this decision should be directed to Diane Goodwyn at (571) 272-6735.

The patent file is being forwarded to Files Repository.

Thurman Page
Petitions Examiner
Office of Petitions

UNITED STATES PATENT AND TRADEMARK OFFICE

COMMISSIONER FOR PATENTS
UNITED STATES PATENT AND TRADEMARK OFFICE
P.O. BOX 1450
ALEXANDRIA, VA 22313-1450
www.uspto.gov

Paper No.

LAHIVE & COCKFIELD, LLP /
BIOGEN IDEC
FLOOR 30, SUITE 3000
ONE POST OFFICE SQUARE
BOSTON MA 02109-2127

COPY MAILED

SEP 14 2009

OFFICE OF PETITIONS

In re Application of :
Williams et al. :
Application No. 10/390,566 : ON APPLICATION FOR
Filed: March 17, 2003 : PATENT TERM ADJUSTMENT
Atty Docket No. BGG-A104RCE2 :

This is in response to the APPLICATION FOR PATENT TERM ADJUSTMENT INCLUDING REQUEST FOR RECONSIDERATION UNDER 37 CFR §1.705(b) filed on March 16, 2009. Applicants submit that the correct patent term adjustment to be indicated on the patent is nine hundred eighty (980) days, not two hundred eighteen (218) days as calculated by the Office as of the mailing of the initial determination of patent term adjustment. Applicants request this correction on the basis that the Office will take in excess of three years to issue this patent. Applicants further submit that 13 days of applicant delay are not correctly reflected in the PALM record.

The application for patent term adjustment is **GRANTED to the extent indicated** with respect to the period of applicant delay of 13 days.

The Office has updated the PALM and PAIR screens to reflect that the correct periods of applicant delay. A copy of the updated PAIR screen, showing the correct determination, is enclosed.

Insofar as the instant application for patent term adjustment requests reconsideration of the patent term adjustment as it relates to the Office's failure to issue the patent within 3 years of the filing date, the application for patent term adjustment under 37 CFR 1.705(b) is **DISMISSED as PREMATURE**.

Knowledge of the actual date the patent issues is required to calculate the amount, if any, of additional patent term patentee is entitled to for Office failure to issue the patent within 3

years. See § 1.702(b). (This is true even where a request for continued examination (RCE) was filed). The computer will not undertake the § 1.702(b) calculation until the actual date of issuance of the patent has been determined. Likewise, the computer will not calculate any further Office delay under § 1.702(a)(4) or applicant delay under § 1.704(c)(10) until the actual date of issuance of the patent has been determined. As such, the Office can not make a determination on the correctness of the patent term adjustment until the patent has issued.

Requesting reconsideration of the patent term adjustment to be indicated on the patent under 37 CFR 1.705(b) based on the initial determination of patent term adjustment and a projected issuance date of the patent (or even the filing date of the request for continued examination) is premature. Accordingly, it is appropriate to dismiss as premature such a request.

Rather than file an application for patent term adjustment under 37 CFR 1.705(b) contesting the 37 CFR 1.702(b) calculation at the time of the mailing of the notice of allowance, applicant is advised that they may wait until the time of the issuance of the patent and file a request for reconsideration of the patent term adjustment pursuant to 37 CFR 1.705(d). As the USPTO does not calculate the amount of time earned pursuant to 37 CFR 1.702(b) until the time of the issuance of the patent, the Office will consider any request for reconsideration of the patent term adjustment due to an error in the calculation of 37 CFR 1.702(b) to be timely if the request for reconsideration is filed within two months of the issuance of the patent. However, as to all other bases for contesting the initial determination of patent term adjustment received with the notice of allowance, applicant must timely file an application for patent term adjustment prior to the payment of the issue fee[1].

---

[1] For example, if applicant disputes both the calculation of patent term adjustment under 37 CFR 1.702(a)(1) for Office failure to mail a first Office action or notice of allowance not later than fourteen months after the date on which the application was filed and under 37 CFR 1.702(b) for Office failure to issue a patent within three years of the actual filing date of the application, then applicant must still timely file an application for patent term adjustment prior to the payment of the issue fee to contest the calculation of Office delay in issuing a first Office action or notice of allowance. See 37 CFR 1.705(b) and 35 U.S.C. 154(b)(3)(B). A dispute as to the calculation of the §1.702(a)(1) period raised on request for reconsideration of patent term adjustment under 37 CFR 1.705(d) will be dismissed as untimely filed.

The Office acknowledges submission of the $200.00 fee set forth in 37 CFR 1.18(e) for consideration of the application for patent term adjustment under 37 CFR 1.705(b).

Any request for reconsideration of the patent term adjustment indicated on the patent must be timely filed within 2 months after issuance pursuant to 37 CFR 1.705(d) and must include payment of the required fee under 37 CFR 1.18(e).

Applicants argue that the period of reduction of 13 days for applicant delay under 37 CFR 1.704(b) for delay in filing a response to the Office action mailed on August 10, 2005, is incorrect. Rather, applicants state, a period of reduction of 11 days for applicant delay should be entered pursuant to 37 CFR 1.704(b) for the submission of a reply on November 21, 2005, three months and 11 days after the mailing of the restriction requirement mailed on August 10, 2005. Applicants aver that an additional period of reduction of two (2) days should entered, pursuant to 37 CFR 1.704(c)(8) for the filing of a supplemental reply (Information Disclosure Statement) filed on November 23, 2005, two (2) days after the filing of the reply filed on November 21, 2005.

Applicants are correct. The reduction of 13 days will be removed. Instead, a reduction of 11 days pursuant to 37 CFR 1.704(b) and a separate reduction of two (2) days pursuant to 37 CFR 1.704(c)(8), respectively, will be entered.

The Office thanks applicants for their good faith and candor in bringing this to the attention of the Office.

The Office of Data Management has been advised of this decision. The application is thereby forwarded to the Office of Data Management for issuance of the patent. The patent term adjustment indicated on the patent (as shown on the Issue Notification mailed about three weeks prior to patent issuance) will include any additional adjustment accrued both for Office delay in issuing the patent more than four months after payment of the issue fee and satisfaction of all outstanding requirements, and if applicable, for the Office taking in excess of three years to issue the patent (to the extent that the three-year period does not overlap with periods already accorded).

Telephone inquiries specific to this decision should be directed to Senior Petitions Attorney Douglas I. Wood at (571) 272-3231.

Alesia Brown F/

Anthony Knight
Supervisor
Office of Petitions

Encl: Revised PALM calculation

PALM INTRANET

Day : Sunday
Date: 9/13/2009
Time: 09:08:02

PTA Calculations for Application: 10/390566			
Application Filing Date:	03/17/2003	PTO Delay (PTO):	450
Issue Date of Patent:		Three Years:	0
Pre-Issue Petitions:	0	Applicant Delay (APPL):	232
Post-Issue Petitions:	0	Total PTA (days):	218
PTO Delay Adjustment:	0		

File Contents History

Number	Date	Contents Description	PTO	APPL	START
88	09/13/2009	ADJUSTMENT OF PTA CALCULATION BY PTO		2	
87	09/13/2009	ADJUSTMENT OF PTA CALCULATION BY PTO		11	
86	09/13/2009	ADJUSTMENT OF PTA CALCULATION BY PTO	13		
77	12/16/2008	MAIL NOTICE OF ALLOWANCE			
76	12/12/2008	ISSUE REVISION COMPLETED			
75	12/12/2008	DOCUMENT VERIFICATION			
74	12/12/2008	NOTICE OF ALLOWANCE DATA VERIFICATION COMPLETED			
73	12/08/2008	NOTICE OF ALLOWABILITY			
72	10/03/2008	INFORMATION DISCLOSURE STATEMENT CONSIDERED			
68	10/21/2008	DATE FORWARDED TO EXAMINER			
67	10/03/2008	REQUEST FOR CONTINUED EXAMINATION (RCE)			
66	10/21/2008	DISPOSAL FOR A RCE/CPA/129 (EXPRESS ABANDONMENT IF CPA)			
65	10/03/2008	REFERENCE CAPTURE ON IDS			
64	10/03/2008	INFORMATION DISCLOSURE STATEMENT (IDS) FILED			
63	10/03/2008	INFORMATION DISCLOSURE STATEMENT (IDS) FILED			
62	10/03/2008	WORKFLOW - REQUEST FOR RCE - BEGIN			
61	08/07/2008	FINISHED INITIAL DATA CAPTURE			
60	07/21/2008	SEQUENCE FORWARDED TO PUBS ON TAPE			
59	07/07/2008	EXPORT TO INITIAL DATA CAPTURE			
58	07/03/2008	MAIL NOTICE OF ALLOWANCE			
57	07/02/2008	ISSUE REVISION COMPLETED			
56	07/02/2008	DOCUMENT VERIFICATION			
55	07/02/2008	NOTICE OF ALLOWANCE DATA VERIFICATION COMPLETED			
54	07/02/2008	CASE DOCKETED TO EXAMINER IN GAU			

53	06/26/2008	NOTICE OF ALLOWABILITY			
50	04/30/2008	DATE FORWARDED TO EXAMINER			
49	04/18/2008	AMENDMENT SUBMITTED/ENTERED WITH FILING OF CPA/RCE			
48	04/30/2008	DATE FORWARDED TO EXAMINER			
47	04/18/2008	REQUEST FOR CONTINUED EXAMINATION (RCE)			
46	04/30/2008	DISPOSAL FOR A RCE/CPA/129 (EXPRESS ABANDONMENT IF CPA)			
45	04/18/2008	REQUEST FOR EXTENSION OF TIME - GRANTED			
44	04/18/2008	WORKFLOW - REQUEST FOR RCE - BEGIN			
43	11/13/2007	CORRESPONDENCE ADDRESS CHANGE			
42	09/21/2007	NOTICE OF APPEAL FILED		92	39
41	09/21/2007	REQUEST FOR EXTENSION OF TIME - GRANTED			
40	09/05/2007	CORRESPONDENCE ADDRESS CHANGE			
39	03/21/2007	MAIL NON-FINAL REJECTION			
38	03/17/2007	NON-FINAL REJECTION			
37	02/20/2007	NOTICE OF APPEAL FILED			
36	03/01/2007	DATE FORWARDED TO EXAMINER			
35	02/20/2007	AMENDMENT AFTER FINAL REJECTION		94	32
34	02/20/2007	REQUEST FOR EXTENSION OF TIME - GRANTED			
33	09/05/2006	IFW TSS PROCESSING BY TECH CENTER COMPLETE			
32	08/18/2006	MAIL FINAL REJECTION (PTOL - 326)			
31	08/16/2006	FINAL REJECTION			
30	06/18/2006	DATE FORWARDED TO EXAMINER			
29	06/12/2006	RESPONSE AFTER NON-FINAL ACTION		33	27
28	06/12/2006	REQUEST FOR EXTENSION OF TIME - GRANTED			
27	02/10/2006	MAIL NON-FINAL REJECTION			
26	02/06/2006	NON-FINAL REJECTION			
24	11/23/2005	INFORMATION DISCLOSURE STATEMENT CONSIDERED			
22	12/14/2005	DATE FORWARDED TO EXAMINER			
21	11/23/2005	RESPONSE TO ELECTION / RESTRICTION FILED		13	17
20	11/23/2005	REQUEST FOR EXTENSION OF TIME - GRANTED			
19	11/23/2005	REFERENCE CAPTURE ON IDS			
18.7	11/23/2005	INFORMATION DISCLOSURE STATEMENT (IDS) FILED			
18	11/23/2005	INFORMATION DISCLOSURE STATEMENT (IDS) FILED			
17	08/10/2005	MAIL RESTRICTION REQUIREMENT	450		-1
16	08/08/2005	REQUIREMENT FOR RESTRICTION / ELECTION			

15	06/17/2005	CASE DOCKETED TO EXAMINER IN GAU			
14	03/16/2004	CASE DOCKETED TO EXAMINER IN GAU			
13	12/19/2003	CORRESPONDENCE ADDRESS CHANGE			
12	09/09/2003	APPLICATION DISPATCHED FROM OIPE			
11	09/09/2003	APPLICATION IS NOW COMPLETE			
10	08/27/2003	PAYMENT OF ADDITIONAL FILING FEE/PREEXAM			
8	08/27/2003	A STATEMENT BY ONE OR MORE INVENTORS SATISFYING THE REQUIREMENT UNDER 35 USC 115, OATH OF THE APPLIC			
7	05/27/2003	NOTICE MAILED--APPLICATION INCOMPLETE--FILING DATE ASSIGNED			
5	04/30/2003	IFW SCAN & PACR AUTO SECURITY REVIEW			
4	04/07/2003	ERROR(S) IN CRF CORRECTED BY STIC			
3	04/04/2003	IFW SCAN & PACR AUTO SECURITY REVIEW			
2	03/17/2003	CRF DISK HAS BEEN RECEIVED BY PREEXAM / GROUP / PCT			
1	03/17/2003	INITIAL EXAM TEAM NN			

Search Another: Application# Search

EXPLANATION OF PTA CALCULATION

EXPLANATION OF PTE CALCULATION

To go back, right click here and select Back. To go forward, right click here and select Forward. To refresh, right click here and select Refresh.

Back to OASIS | Home page

UNITED STATES PATENT AND TRADEMARK OFFICE

COMMISSIONER FOR PATENTS
UNITED STATES PATENT AND TRADEMARK OFFICE
P.O. BOX 1450
ALEXANDRIA, VA 22313-1450
WWW.USPTO.GOV

Paper No. 4

GARY M NATH
NATH & ASSOCIATES PLLC
1030 15TH STREET NW
6TH FLOOR
WASHINGTON DC 20005

COPY MAILED

JUL 2 5 2003

OFFICE OF PETITIONS

In re Application of Capote, et al. Application No. 10/390,603 Filed: March 19, 2003 Attorney Docket No. 90034-Y	DECISION ON PETITION

This is a decision on the "Petition to Accept Omitted Items(s) in a Nonprovisional Application and Maintain Original Filing Date", filed June 20, 2003, which is being treated as a petition under 37 CFR 1.53 to accord the above-identified application a filing date of March 19, 2003, with pages 32 and 33 of the specification as a part of the original disclosure.

Application papers in the above-identified application were filed on March 19, 2003. However, on June 16, 2003, the Initial Patent Examination Division mailed applicant a "Notice of Omitted Items in a Nonprovisional Application." Applicant was notified that the application papers had been accorded a filing date; however, pages 32 and 33 of the specification appeared to have been omitted.

In response, applicant timely filed the instant petition. Petitioner maintains that the application as originally filed included a specification containing pages 32 and 33. As evidence of receipt in the Office of pages 32 and 33 of the specification, petitioner submitted a true and correct copy of a USPTO date stamped filing receipt.

A receipt which itemizes and properly identifies the items which are being filed serves as *prima facie* evidence of receipt in the Office of all items listed thereon on the date stamped thereon by the Office. See MPEP 503. A review of petitioner's filing receipt reveals that: 1) it was date stamped as received in the Office of Initial Patent Examination (OIPE) on March 19, 2003; 2) it specifically identifies the items being filed, including "39 pages of textual specification" and 3) it lacks any annotation of nonreceipt of any item denoted. Thus, petitioner has shown that 39 total pages of specification, including pages 32 and 33, were filed on March 19, 2003.

The application papers already considered received in the Office on March 19, 2003, were reviewed along with the missing pages 32 and 33 of the specification submitted on petition. These papers together constitute the items described on the filing receipt. Petitioner has shown that pages 32 and 33 of the specification were among the items present in the application on the date of deposit and should be included in the original application papers.

Accordingly, the petition is **GRANTED**.

Given the basis for granting the petition, the petition fee has been refunded to Deposit Account 14-0112, as authorized.

The application is being forwarded to the Office of Initial Patent Examination (OIPE) for further processing with a filing date of March 19, 2003, using the application papers received in the Office on that date and the missing pages 32 and 33 of the specification, resubmitted on petition filed June 20, 2003. Applicant will receive appropriate notifications regarding the fees owed, if any, and other information in due course from OIPE.

Telephone inquiries related to this decision should be directed to Petitions Attorney Cliff Congo at 703-305-0272.

Beverly M. Flanagan
Supervisory Petitions Examiner
Office of Petitions

10390603

SPE RESPONSE FOR CERTIFICATE OF CORRECTION

Paper No.: _____

DATE : 11/17/04

TO SPE OF : ART UNIT 2815

SUBJECT : Request for Certificate of Correction on Patent No.: 6,774,493

A response is requested with respect to the accompanying request for a certificate of correction.

Please complete this form and return with file, within 7 days to:
Certificates of Correction Branch - PK 3-915
Palm location 7580 - Tel. No. 305-8309

With respect to the change(s) requested, correcting Office and/or Applicant's errors, should the patent read as shown in the certificate of correction? No new matter should be introduced, nor should the scope or meaning of the claims be changed.

Thank You For Your Assistance

Certificates of Correction Branch

The request for issuing the above-identified correction(s) is hereby:
Note your decision on the appropriate box.

- ☑ Approved — All changes apply.
- ☐ Approved in Part — Specify below which changes do not apply.
- ☐ Denied — State the reasons for denial below.

Comments:

T. Thomas
SPE

2815
Art Unit

UNITED STATES PATENT AND TRADEMARK OFFICE

COMMISSIONER FOR PATENTS
UNITED STATES PATENT AND TRADEMARK OFFICE
P.O. BOX 1450
ALEXANDRIA, VA 22313-1450
www.uspto.gov

JUN 18 2004

VP
PAPER NO. ___

In re Application of	:	
Edward D. Phillips	:	
Serial Number: 10/390,621	:	PETITION UNDER
Filed: March 19, 2003	:	M.P.E.P.708.02 IV
For: COLLOIDAL BATTERY	:	and V

This is in response to the petition filed May 12, 2003, requesting that the above-identified application be granted Special Status under Sections 708.02 IV and V of the MPEP and 37 CFR 1.102(c) (**no fee required**).

The request for Special Status considered under Sections 708.02 IV and V of the MPEP is granted because criteria under 37 CFR 1.102(c) have been met.

Accordingly the petition is **GRANTED.**

Marian C. Knode

Marian C. Knode, Special Programs Examiner
Technology Center 1700
Chemical and Materials Engineering

Patrick P. Phillips
Kremblas, Foster, Phillips & Pollick
7632 Slate Ridge Boulevard
Reynoldsburg OH 43068

UNITED STATES PATENT AND TRADEMARK OFFICE

Commissioner for Patents
United States Patent and Trademark Office
P.O. Box 1450
Alexandria, VA 22313-1450
www.uspto.gov

LOWE HAUPTMAN BERNER, LLP
1700 DIAGONAL ROAD
SUITE 300
ALEXANDRIA VA 22314

COPY MAILED

APR 1 2 2007

OFFICE OF PETITIONS

In re Application of :
Ching-Chen Chen :
Application No. 10/390,634 : DECISION ON PETITION
Filed: March 19, 2003 :
Attorney Docket No. 3210/22 :

This is a decision on the renewed petition under 37 CFR 1.181, filed May 15, 2006, to withdraw the holding of abandonment in the above-identified application. The petition was recently forwarded to the Office of Petition. Upon receipt, the petition was immediately reviewed and decided on the merits. The Office sincerely apologizes for any inconvenience.

On July 29, 2005, the Office mailed a Corrected Notice of Allowance and Fee(s) Due ("Corrected Notice of Allowance"), which set a three-month statutory period for reply. In the absence of the timely payment of the issue fee and publication fee, the application became abandoned on October 30, 2005. On December 5, 2005, the Office mailed a Notice of Abandonment. On February 8, 2006, petitioner filed a petition under 37 CFR 1.181to withdraw the holding of abandonment, which was dismissed by the decision of March 14, 2006. On May 15, 2006, petitioner filed the present renewed petition.

Petitioner requested that the Office withdraw the holding of abandonment due to non-receipt of the Corrected Notice of Allowance mailed on July 29, 2005. The practitioner stated that a "second" Notice of Allowance was mailed on July 29, 2005, but was never received.

A review of the record indicates no irregularity in the mailing of the Corrected Notice of Allowance of July 29, 2005, and in the absence of any irregularity in the mailing, there is a strong presumption that the Corrected Notice of Allowance was properly mailed to the address of record. This presumption may be overcome by a showing that the Corrected Notice of Allowance was not in fact received. The showing required to establish non-receipt of an Office communication must include a statement from the practitioner, stating that the practitioner did not receive the Office communication and attesting to the fact that a search of the file jacket and docket records indicates that the Office communication was not received. A copy of the docket record where the non-received Office communication would have been entered had it been received and docketed must be attached to and referenced in practitioner's

statement. For example, if a three-month period for reply was set in the non-received Office action, a copy of the docket report showing all replies docketed for a date three months from the mail date of the non-received Office action must be submitted as documentary proof of non-receipt of the Office action.

After reviewing the documents submitted on petition, the Office concludes that the showing of record is sufficient to warrant withdrawal of the holding of abandonment. The practitioner for petitioner submitted copies of docket records where the Notice of Allowance would have been entered had it been received and docketed. The practitioner attested to the fact that a search of the file jacket and docket records indicated that the Notice of Allowance was not received. Accordingly, petitioner presented the required showing under 37 CFR 1.181.

The petition under 37 CFR 1.181 is **GRANTED**. No petition fee is required.

Technology Center Art Unit 1744 has been advised of this decision. The matter is being referred to the Technology Center's technical support staff for mailing of a new Notice of Allowance. The three (3) month statutory time period for responding to the Notice of Allowance will be set to run from the mailing date of the new Notice of Allowance.

Telephone inquiries related to this decision may be directed to the undersigned at (571) 272-3211.

C. T. Donnell

Christina Tartera Donnell
Senior Petitions Attorney
Office of Petitions

UNITED STATES PATENT AND TRADEMARK OFFICE

Commissioner for Patents
United States Patent and Trademark Office
P.O. Box 1450
Alexandria, VA 22313-1450
www.uspto.go

Dennison, Schultz & Dougherty
1727 King Street, Suite 105
Alexandria, VA 22314

Decision mailed
03/14/06
Office of Petitions

In re Application of :
Ching-Chen Chen :
Application No. 10/390,634 : DECISION ON PETITION
Filed: March 19, 2003 :
Attorney Docket No. 3210/22 :

This is a decision on the petition under 37 CFR 1.181, filed February 8, 2006, to withdraw the holding of abandonment in the above-identified application.

On July 29, 2005, the Office mailed a Corrected Notice of Allowance and Fee(s) Due ("Corrected Notice of Allowance"), which set a three-month statutory period for reply. In the absence of the timely payment of the issue fee and publication fee, the application became abandoned on October 30, 2005. On December 5, 2005, the Office mailed a Notice of Abandonment.

In the present petition, petitioner requested that the Office withdraw the holding of abandonment due to non-receipt of the Corrected Notice of Allowance mailed on July 29, 2005. The practitioner stated that a "second" Notice of Allowance was mailed on July 29, 2005, but was never received. The practitioner submitted a copy of the office's mail log from July 29, 2005 to August 12, 2005, with the case docket history, as evidence that the Corrected Notice of Allowance was not received.

A review of the record indicates no irregularity in the mailing of the Corrected Notice of Allowance of July 29, 2005, and in the absence of any irregularity in the mailing, there is a strong presumption that the Corrected Notice of Allowance was properly mailed to the address of record. This presumption may be overcome by a showing that the Corrected Notice of Allowance was not in fact received. The showing required to establish non-receipt of an Office communication must include a statement from the practitioner, stating that the practitioner did not receive the Office communication and attesting to the fact that a search of the file jacket and docket records indicates that the Office communication was not received. A copy of the docket record where the non-received Office communication would have been entered had it been received and docketed must be attached to and referenced in practitioner's

statement. For example, if a three-month period for reply was set in the non-received Office action, a copy of the docket report showing all replies docketed for a date three months from the mail date of the non-received Office action must be submitted as documentary proof of non-receipt of the Office action.

The showing of record is insufficient to warrant withdrawal of the holding of abandonment at this time. It is not readily apparent from the documentary evidence submitted on petition that the Corrected Notice of Allowance was not received. Initially, the Office notes that the practitioner did not provide a statement "attesting to the fact that a search of the file jacket and docket records indicates that the Office communication was not received." MPEP 711.03(c)(I)(A). Additionally, the Office requests further clarification of the firm's practice for docketing communications from the USPTO. Unfortunately, the firm's docketing system is not apparent from the docket records submitted with this petition.

The petition to withdraw the holding of abandonment is **dismissed**.

Any request for reconsideration of this decision must be submitted within **TWO (2) MONTHS** from the mail date of this decision. The reconsideration request should include a cover letter entitled "Renewed Petition under 37 CFR 1.181." Extensions of time are permitted under 37 CFR 1.136(a). In the alternative, petitioner may wish to file a petition under 37 CFR 1.137(b) to revive the application.

Further correspondence with respect to this matter should be addressed as follows and **to the attention of Senior Petitions Attorney Christina Tartera Donnell:**

By mail: Mail Stop Petition
Commissioner for Patents
P.O. Box 1450
Alexandria, VA 22313-1450

By FAX: (571) 273-8300
Attn: Office of Petitions

By hand: Customer Service Window
Randolph Building
401 Dulany Street
Alexandria, VA 22314

Telephone inquiries related to this decision may be directed to the undersigned at (571) 272-3211.

C. T. Donnell

Christina Tartera Donnell
Senior Petitions Attorney
Office of Petitions

UNITED STATES PATENT AND TRADEMARK OFFICE

UNITED STATES DEPARTMENT OF COMMERCE
United States Patent and Trademark Office
Address: COMMISSIONER FOR PATENTS
P.O. Box 1450
Alexandria, Virginia 22313-1450
www.uspto.gov

GENERAL ELECTRIC COMPANY
GLOBAL RESEARCH
ONE RESEARCH CIRCLE
PATENT DOCKET RM. BLDG. K1-4A59
NISKAYUNA, NY 12309

Mail Date: 04/20/2010

Applicant	: Kete Charles Chalermkraivuth	: DECISION ON REQUEST FOR
Patent Number	: 7593880	: RECALCULATION of PATENT
Issue Date	: 09/22/2009	: TERM ADJUSTMENT IN VIEW
Appliction No	: 10/390,709	: OF WYETH AND NOTICE OF INTENT TO
Filed	: 03/19/2003	: ISSUE CERTIFICATE OF CORRECTION
		:

The Request for Recalculation is **GRANTED** to the extent indicated.

The patent term adjustment has been determined to be **1678** days. The USPTO will *sua sponte* issue a certificate of correction reflecting the amount of PTA days determined by the recalculation.

Prior to the issuance of the certificate of correction, the USPTO will afford patentee an opportunity to be heard and request reconsideration. Accordingly, patentee has **one month or thirty (30) days**, whichever is longer, to file a request for reconsideration of this patent term adjustment calculation. See 35 U.S.C. 154(b)(3)(B)(ii) and 37 CFR 1.322(a)(4). No extensions of time will be granted under 37 CFR 1.136.

Patentee should use document code PET.OP if electronically filing a request for reconsideration of this patent term adjustment calculation. The patentee must also include the information required by 37 CFR 1.705(b)(2) and the fee required by 37 CFR 1.18(e). If patentee does not file a timely request for reconsideration of this patent term adjustment calculation including the information required by 37 CFR 1.705(b)(2) and the fee required by 37 CFR 1.18(e), the USPTO will issue a certificate of correction reflecting the PTA determination noted above.

Patentee should be aware that in order to preserve the right to review in the United States District Court for the District of Columbia of the USPTO patent term adjustment determination, patentee must ensure that he or she also take the steps required under 35 U.S.C. 154(b)(4)(A) in a timely manner. Nothing in the request for recalculation should be construed as providing an alternative time frame for commencing a civil action under 35 U.S.C. 154(b)(4)(A).

Any questions concerning this decision should be directed to the Office of Patent Legal Administration at 571-272-7702.

UNITED STATES PATENT AND TRADEMARK OFFICE

UNITED STATES DEPARTMENT OF COMMERCE
United States Patent and Trademark Office
Address: COMMISSIONER FOR PATENTS
P.O. Box 1450
Alexandria, Virginia 22313-1450
www.uspto.gov

GENERAL ELECTRIC COMPANY
GLOBAL RESEARCH
ONE RESEARCH CIRCLE
PATENT DOCKET RM. BLDG. K1-4A59
NISKAYUNA, NY 12309

Mail Date: 05/04/2010

Applicant	: Kete Charles Chalermkraivuth	: DECISION ON REQUEST FOR
Patent Number	: 7640201	: RECALCULATION of PATENT
Issue Date	: 12/29/2009	: TERM ADJUSTMENT IN VIEW
Application No	: 10/390,710	: OF WYETH AND NOTICE OF INTENT TO
Filed	: 03/19/2003	: ISSUE CERTIFICATE OF CORRECTION
		:

The Request for Recalculation is **GRANTED** to the extent indicated.

The patent term adjustment has been determined to be **1711** days. The USPTO will *sua sponte* issue a certificate of correction reflecting the amount of PTA days determined by the recalculation.

Prior to the issuance of the certificate of correction, the USPTO will afford patentee an opportunity to be heard and request reconsideration. Accordingly, patentee has **one month or thirty (30) days**, whichever is longer, to file a request for reconsideration of this patent term adjustment calculation. See 35 U.S.C. 154(b)(3)(B)(ii) and 37 CFR 1.322(a)(4). No extensions of time will be granted under 37 CFR 1.136.

Patentee should use document code PET.OP if electronically filing a request for reconsideration of this patent term adjustment calculation. The patentee must also include the information required by 37 CFR 1.705(b)(2) and the fee required by 37 CFR 1.18(e). If patentee does not file a timely request for reconsideration of this patent term adjustment calculation including the information required by 37 CFR 1.705(b)(2) and the fee required by 37 CFR 1.18(e), the USPTO will issue a certificate of correction reflecting the PTA determination noted above.

Patentee should be aware that in order to preserve the right to review in the United States District Court for the District of Columbia of the USPTO patent term adjustment determination, patentee must ensure that he or she also take the steps required under 35 U.S.C. 154(b)(4)(A) in a timely manner. Nothing in the request for recalculation should be construed as providing an alternative time frame for commencing a civil action under 35 U.S.C. 154(b)(4)(A).

Any questions concerning this decision should be directed to the Office of Patent Legal Administration at 571-272-7702.

UNITED STATES DEPARTMENT OF COMMERCE
Patent and Trademark Office
ASSISTANT SECRETARY OF COMMERCE AND
COMMISSIONER OF PATENTS AND TRADEMARKS
Washington, DC 20231

6/5/09

Patent No. :7008492
Inventor(s) :Peter Lisec
Issued :3/7/2006
Title : METHOD AND APPARATUS FOR THE MECHANICAL APPLICATION OF A SPACER STRIP ONTO A GLASS PANE
Atty.doc./File No.

Request for Certificates of Correction

Consideration has been given to your request for the issuance of a Certificate of Correction, for the above – identified patent under the provisions of CFR 1.322.

Inspection of the application for the patent reveals item [63], is printed in accordance with the record. Therefore being no fault on the Patent and Trademark Office, It has no authority to issue a certificate of correction under the provision of 1.322.

In view of the forgoing, your request in this matter, is hereby denied.

Future written correspondence concerning this matter should be filed and directed to Decisions & Certificates of Correction Branch.

Henry Randall
Decisions & Certificates
of Correction Branch
(703) 756-1571

Edell Shapiro & Finnan LLC
1901 Research Blvd. Suite 400
Rockville, Maryland 20850

HR

SPE RESPONSE FOR CERTIFICATE OF CORRECTION

Paper No.: _____

DATE : 7/17/09

TO SPE OF : ART UNIT 1793 WARD, Jessica (SPE)

SUBJECT : Request for Certificate of Correction for Appl. No.: 10/390754 Patent No.: 7008492

Please respond to this request for a certificate of correction within 7 days.

FOR IFW FILES:

Please review the requested changes/corrections as shown in the **COCIN** document(s) in the IFW application image. No new matter should be introduced, nor should the scope or meaning of the claims be changed.

Please complete the response (see below) and forward the completed response to scanning using document code **COCX**.

FOR PAPER FILES:

Please review the requested changes/corrections as shown in the attached certificate of correction. Please complete this form (see below) and forward it with the file to:

Certificates of Correction Branch (CofC)
South Tower - 9A22
Palm Location 7580

H. Riley
Certificates of Correction Branch
703-308-9390 ext. _____

Thank You For Your Assistance

The request for issuing the above-identified correction(s) is hereby:
Note your decision on the appropriate box.

- ☑ **Approved** — All changes apply.
- ☐ **Approved in Part** — Specify below which changes **do not** apply.
- ☐ **Denied** — State the reasons for denial below.

Comments: _____

Jessica Ward
SPE

1793
Art Unit

UNITED STATES PATENT AND TRADEMARK OFFICE

Commissioner for Patents
United States Patent and Trademark Office
P.O. Box 1450
Alexandria, VA 22313-1450
www.uspto.gov

APR 18 2005

Mailed:

dss
Paper Number _____

In re application of
Su Huyn Park et al.
Serial No. 10/390,767
Filed: March 19, 2003
For: LIQUID CRYSTAL DISPLAY DEVICE

DECISION ON PETITION

This is a response to the PETITION TO WITHDRAW HOLDING OF ABANDONMENT UNDER 37 C.F.R. § 1.137(a), filed August 19, 2004. The petition requests that the abandonment, as set forth in the Notice of Abandonment mailed July 30, 2004, be withdrawn since the applicant did not receive the Office letter mailed February 05, 2004. (It is noted that applicant has filed a Request for Continued Examination(RCE) filed August 19, 2004 along with the required fees,)

DECISION

The instant request is accepted as a timely petition under 37 C.F.R. 1.181 (no fee), and is evaluated under the procedures regarding an acceptable showing of non-receipt of an office action, TMOG 1156 O.G. 53, November 16, 1993, (see also MPEP 711.03(c) - NEW PROCEDURE TMOG 1170 O.G. 114). A review of the petitioner's evidence indicates that the request has merit. The evidence presented is sufficient to establish that the applicant or any authorized representative of the applicant did not receive the Office letter, mailed February 05, 2004. The evidence provided includes a statement by the petitioner that the Office letter, mailed February 05, 2004 was not received, a statement that a search of the file and docket records was made, and a statement that the search revealed the Office letter was not received. Also provided is a copy of the attorney's application docket records where the Office letter would have been posted had it been timely received.

Therefore, the abandonment is hereby withdrawn, and the application is returned to pending status. The application will be returned to the examiner for processing of the Request for Continued Examination.
The Petition is **GRANTED**.

Jacqueline Stone, Director
Technology Center 1700
Chemical and Materials Engineering

McKenna, Long, & Aldridge LLP
1900 K Street N.W.
Washington, D.C. 20006

UNITED STATES PATENT AND TRADEMARK OFFICE

Commissioner for Patents
United States Patent and Trademark Office
P.O. Box 1450
Alexandria, VA 22313-1450
www.uspto.gov

Mailed: APR 18 2005

dss
Paper Number _____

In re application of
Su Huyn Park et al.
Serial No. 10/390,767
Filed: March 19, 2003
For: LIQUID CRYSTAL DISPLAY DEVICE

DECISION ON PETITION

This is a response to the PETITION TO WITHDRAW HOLDING OF ABANDONMENT UNDER 37 C.F.R. § 1.137(a), filed August 19, 2004. The petition requests that the abandonment, as set forth in the Notice of Abandonment mailed July 30, 2004, be withdrawn since the applicant did not receive the Office letter mailed February 05, 2004. (It is noted that applicant has filed a Request for Continued Examination(RCE) filed August 19, 2004 along with the required fees,)

DECISION

The instant request is accepted as a timely petition under 37 C.F.R. 1.181 (no fee), and is evaluated under the procedures regarding an acceptable showing of non-receipt of an office action, TMOG 1156 O.G. 53, November 16, 1993, (see also MPEP 711.03(c) - NEW PROCEDURE TMOG 1170 O.G. 114). A review of the petitioner's evidence indicates that the request has merit. The evidence presented is sufficient to establish that the applicant or any authorized representative of the applicant did not receive the Office letter, mailed February 05, 2004. The evidence provided includes a statement by the petitioner that the Office letter, mailed February 05, 2004 was not received, a statement that a search of the file and docket records was made, and a statement that the search revealed the Office letter was not received. Also provided is a copy of the attorney's application docket records where the Office letter would have been posted had it been timely received.

Therefore, the abandonment is hereby withdrawn, and the application is returned to pending status. The application will be returned to the examiner for processing of the Request for Continued Examination.
The Petition is **GRANTED**.

JMStone

Jacqueline Stone, Director
Technology Center 1700
Chemical and Materials Engineering

McKenna, Long, & Aldridge LLP
1900 K Street N.W.
Washington, D.C. 20006

UNITED STATES PATENT AND TRADEMARK OFFICE

Commissioner for Patents
United States Patent and Trademark Office
P.O. Box 1450
Alexandria, VA 22313-1450
www.uspto.gov

King & Partners, PLC
170 College Avenue
SUITE 230
HOLLAND MI 49423

COPY MAILED

OCT 0 8 2009

OFFICE OF PETITIONS

In re Application of

Todd R. Saunders :

Application No. 10/390,800

: DECISION ON PETITION

Filed: March 18, 2003

:

Attorney Docket No. SAU01P-301

This is a decision on the petition under 37 CFR 1.137(b), filed September 1, 2009, to revive the above-identified application.

The petition is **GRANTED**.

The above-cited application became abandoned for failure to reply in a timely manner to the non-final Office action mailed June 6, 2005, which set a shortened statutory period for reply of three (3) months from its mailing date. Extensions of time were available pursuant to 37 CFR 1.136. Accordingly, the application became abandoned on September 7, 2005. A Notice of Abandonment was mailed on January 12, 2006.

It is not apparent whether the person signing the statement of unintentional delay was in a position to have firsthand or direct knowledge of the facts and circumstances of the delay at issue. Nevertheless, such statement is being treated as having been made as the result of a reasonable inquiry into the facts and circumstances of such delay. See 37 CFR 10.18(b) and Changes to Patent Practice and Procedure; Final Rule Notice, 62 Fed. Reg. 53131, 53178 (October 10, 1997), 1203 Off. Gaz. Pat. Office 63, 103 (October 21, 1997). In the event that such an inquiry has not been made, petitioner must make such an inquiry. If such inquiry results in the discovery that it is not correct that the entire delay in filing the required reply from the due date for the reply until the filing of a grantable petition pursuant to 37 CFR 1.137(b) was unintentional, petitioner must notify the Office.

There is no indication that the person signing the instant petition was ever given a power of attorney or authorization of agent to prosecute the above-identified application. If the person signing the instant petition desires to receive future correspondence regarding this application,

the appropriate power of attorney or authorization of agent must be submitted. While a courtesy copy of this decision is being mailed to the person signing the instant petition, all future correspondence will be directed to the address of currently of record until such time as appropriate instructions are received to the contrary.

The amendment filed September 1, 2009, is noted.

The application is being forwarded to Technology Center 3700, GAU 3723 for further processing.

Telephone inquiries concerning this decision should be directed to the undersigned at (571) 272-3222.

Kenya A. McLaughlin
Petitions Attorney
Office of Petitions

cc:
Gary M. Hartman
552 E. 700 N.
Valparaiso, IN 46383

UNITED STATES PATENT AND TRADEMARK OFFICE

Commissioner for Patents
United States Patent and Trademark Office
P.O. Box 1450
Alexandria, VA 22313-1450
www.uspto.gov

SAWYER LAW GROUP
P.O. Box 51418
Palo Alto CA 94303

COPY MAILED

DEC 14 2007

OFFICE OF PETITIONS

In re Application of	:	
Wilding et al.	:	
Application No. 10/390812	:	ON PETITION
Filing Date: 03/17/2003	:	
Attorney Docket Number:	:	
CA920010060US1 2707P	:	

This is a decision on the petition under the unintentional provisions of 37 CFR 1.137(b), filed November 8, 2007, to revive the above-identified application.

The petition is **GRANTED**.

The application became abandoned for failure to timely file a reply within the meaning of 37 CFR 1.113 to the final Office action of May 1, 2007. The proposed reply required for consideration of a petition to revive must be a Notice of Appeal (and appeal fee required by 37 CFR 41.20(b)(2), an amendment that *prima facie* places the application in condition for allowance, a Request for Continued Examination and submission (37 CFR 1.114), or the filing of a continuing application under 37 CFR 1.53(b). See MPEP 711.03(c)(III)(A)(2). No extensions of time pursuant to the provisions of 37 CFR 1.136(a) were obtained. Accordingly, the date of abandonment of this application is August 2, 2007.

The petition satisfies the requirements of 37 CFR 1.137(b) in that petitioner has supplied (1) the reply in the form of a Request for Continued Examination (RCE) and fee, and the submission required by 37 CFR 1.114, filed July 19, 2007; (2) the petition fee; and (3) a proper statement of unintentional delay.

Telephone inquiries concerning this decision should be directed to the undersigned at (571) 272-3232.

This application is being referred to Technology Center AU 2162 for processing of the RCE and for appropriate action by the Examiner in the normal course of business on the amendment submitted in accordance with 37 CFR 1.114.

Derek L. Woods
Attorney
Office of Petitions

UNITED STATES PATENT AND TRADEMARK OFFICE

Commissioner for Patents
United States Patent and Trademark Office
P.O. Box 1450
Alexandria, VA 22313-1450
www.uspto.gov

NIXON & VANDERHYE, PC
901 NORTH GLEBE ROAD, 11TH FLOOR
ARLINGTON VA 22203

10/12/07

In re Application of:
GING, ANTHONY M., et al.
Serial No.: 10/390,826
Filed: Mar. 19, 2003
Docket: PTB-4398-225

Title: ERGONOMIC AND ADJUSTABLE RESPIRATORY MASK ASSEMBLY WITH VENT COVER

DECISION ON PETITION

This is a decision on the petition filed on Aug. 8, 2007 by which petitioner requests reconsideration and withdrawal of the restriction requirement mailed Oct. 17, 2006, and that non-elected claims 17, 21, 30-32, 38 and 39 be rejoined and examined on the merits. Claims 33-37 were elected and examined and claims 1-16 and 22-24 were rejoined and examined. This petition is being considered pursuant to 37 CFR 1.144 and 37 CFR 1.181, and no fee is required.

The petition is granted.

A review of the record reveals that a restriction requirement was issued on Oct. 17, 2006 among three disclosed and claimed related inventions: I) a mask assembly and an elbow assembly (claims 1-16 and 22-24); II) an elbow assembly (claims 33-37) and III) a removable vent cover (17, 21, 30-32 and 38-39). In the final rejection of Feb. 8, 2007, the examiner agreed to rejoin the non-elected claims 1-16 and 22-24 of Group II invention and examined along with the other elected claims 33-37 of Group II invention. Currently as the record stands, the issue of the propriety of the restriction requirement in the petition remains with the Group III invention and the Groups I and II inventions.

In judging the propriety of the restriction requirement, the related inventions, as claimed, must be shown to be distinct. See MPEP 802.01. The inventions can be shown to be distinct if either or both of the following can be shown: that a combination as claimed in Groups I and II: (A) does not require the particulars of the subcombination as claimed for patentability (to show novelty and unobviousness) and (B) the subcombination as claimed in Group III can be shown to have utility either by itself or in another materially different combination. See MPEP 806.05(c)[1].

[1] MPEP 806.05(c) [R-5] Criteria of Distinctness Between Combination and Subcombination: To support a requirement for restriction between combination and subcombination inventions, both two-way distinctness and reasons for insisting on restriction are necessary, i.e., there would be a *>serious< search burden >if restriction were not required< as evidenced by separate classification, status, or field of search. See MPEP §808.02. The inventions are distinct if it can be shown that a combination as claimed: (A) does not require the particulars of the subcombination as claimed for patentability (to show novelty and unobviousness), and (B) the subcombination can be shown to have utility either by itself or in another materially different combination. When these factors cannot be shown, such inventions are not distinct.

In the instant application, the distinctness between the claimed inventions was justified as stated in the examiner's restriction requirement of Oct. 17, 2006 in that the combination claims an elbow assembly that includes more structural elements than the claimed subcombination of an elbow assembly. The subcombination has separate utility such as elbow joint for a fluid or gas conduit. The examiner has satisfied the requirement set forth in MPEP § 806.05(c). It is noted that petitioner does not dispute the distinctness between the combination and subcombination claims of the inventions under the restriction requirement.

In the petition, petitioner questions the timing of the restriction requirement because the restriction requirement was made after three office actions. In particular, petitioner points out that claim 17 which is one of the non-elected claims was searched and examined. There is little additional burden to the examiner since a search and examination for all groups has already been conducted. In the advisory action of Jun. 1, 2007, the examiner indicated the applicant's introduction of additional independent claims for the elected invention and the continued search for the non-elected invention would provide additional burden to the examiner.

Although a restriction requirement could be made any time before final rejection (37 CFR 1.142(a), the examiner rendered three office actions on all claims presumed to be thoroughly searched in all appropriate areas. Since no specific indication on the record was made of how a serious burden exists by having to examine all claims, the examiner has not met the requirements for making a restriction in this case in accordance with M.P.E.P. 808.02[2]. However, in the present application, the examiner had searched and examined all claims once. As a result of this, there does not appear to be any serious search burden on the part of the examiner to continue examining those non-elected claims 30-32 and 38-39 and once examined claims 17 and 21. Under the circumstances, the restriction requirement of Oct. 17, 2006 is hereby withdrawn. The examiner is directed to consider the amendments filed on Aug. 1, 2006 and May 8, 2007 regarding the non-elected claims 17, 21, 30-32 and 38-39.

Conclusion

In view of the fact that the examiner has already searched and examined some of the non-elected claims 17 and 21 and the remainder of the non-elected claims 30-32 and 38-39 have similar scopes, the restriction requirement promulgated in the Office communication dated Oct. 17, 2006 is withdrawn. The relief requested in the petition is granted.

---

[2] MPEP § 808.02 [R-5] Establishing Burden Where, as disclosed in the application, the several inventions claimed are related, and such related inventions are not patentably distinct as claimed, restriction under 35 U.S.C. 121 is never proper (MPEP § 806.05). If applicant voluntarily files claims to such related inventions in different applications, double patenting may be held. Where the inventions as claimed are shown to be independent or distinct under the criteria of MPEP § 806.05(c) - § 806.06, the examiner, in order to establish reasons for insisting upon restriction, must explain why there would be a serious burden on the examiner if restriction is not required. Thus the examiner must show by appropriate explanation one of the following:(A) Separate classification thereof : This shows that each invention has attained recognition in the art as a separate subject for inventive effort, and also a separate field of search. Patents need not be cited to show separate classification. (B) A separate status in the art when they are classifiable together: Even though they are classified together, each invention can be shown to have formed a separate subject for inventive effort when the examiner can show a recognition of separate inventive effort by inventors. Separate status in the art may be shown by citing patents which are evidence of such separate status, and also of a separate field of search. (C)A different field of search : Where it is necessary to search for one of the inventions in a manner that is not likely to result in finding art pertinent to the other invention(s) (e.g., searching different classes /subclasses or electronic resources, or employing different search queries, a different field of search is shown, even though the two are classified together. The indicated different field of search must in fact be pertinent to the type of subject matter covered by the claims. Patents need not be cited to show different fields of search. Where, however, the classification is the same and the field of search is the same and there is no clear indication of separate future classification and field of search, no reasons exist for dividing among independent or related inventions.

The application is being forwarded to Supervisory Patent Examiner of Art Unit 3731 for further consideration of all pending claims in the amendments filed on Aug. 1, 2006 and May 8, 2007. Any inquiry regarding this decision should be directed to Henry C. Yuen, Special Programs Examiner, at (571) 272-4856.

Petition granted.

Marc Jim for

Frederick R. Schmidt, Director
Technology Center 3700

UNITED STATES PATENT AND TRADEMARK OFFICE

UNITED STATES DEPARTMENT OF COMMERCE
United States Patent and Trademark Office
Address: COMMISSIONER FOR PATENTS
P.O. Box 1450
Alexandria, Virginia 22313-1450
www.uspto.gov

NIXON & VANDERHYE, PC
901 NORTH GLEBE ROAD, 11TH FLOOR
ARLINGTON, VA 22203

Mail Date: 04/21/2010

Applicant	: Anthony M. Ging	: DECISION ON REQUEST FOR
Patent Number	: 7597100	: RECALCULATION of PATENT
Issue Date	: 10/06/2009	: TERM ADJUSTMENT IN VIEW
Appliction No	: 10/390,826	: OF WYETH AND NOTICE OF INTENT TO
Filed	: 03/19/2003	: ISSUE CERTIFICATE OF CORRECTION
		:

The Request for Recalculation is **GRANTED** to the extent indicated.

The patent term adjustment has been determined to be **1097** days. The USPTO will *sua sponte* issue a certificate of correction reflecting the amount of PTA days determined by the recalculation.

Prior to the issuance of the certificate of correction, the USPTO will afford patentee an opportunity to be heard and request reconsideration. Accordingly, patentee has **one month or thirty (30) days**, whichever is longer, to file a request for reconsideration of this patent term adjustment calculation. See 35 U.S.C. 154(b)(3)(B)(ii) and 37 CFR 1.322(a)(4). No extensions of time will be granted under 37 CFR 1.136.

Patentee should use document code PET.OP if electronically filing a request for reconsideration of this patent term adjustment calculation. The patentee must also include the information required by 37 CFR 1.705(b)(2) and the fee required by 37 CFR 1.18(e). If patentee does not file a timely request for reconsideration of this patent term adjustment calculation including the information required by 37 CFR 1.705(b)(2) and the fee required by 37 CFR 1.18(e), the USPTO will issue a certificate of correction reflecting the PTA determination noted above.

Patentee should be aware that in order to preserve the right to review in the United States District Court for the District of Columbia of the USPTO patent term adjustment determination, patentee must ensure that he or she also take the steps required under 35 U.S.C. 154(b)(4)(A) in a timely manner. Nothing in the request for recalculation should be construed as providing an alternative time frame for commencing a civil action under 35 U.S.C. 154(b)(4)(A).

Any questions concerning this decision should be directed to the Office of Patent Legal Administration at 571-272-7702.

UNITED STATES PATENT AND TRADEMARK OFFICE

UNITED STATES DEPARTMENT OF COMMERCE
United States Patent and Trademark Office
Address: COMMISSIONER FOR PATENTS
P.O. Box 1450
Alexandria, Virginia 22313-1450
www.uspto.gov

NIXON & VANDERHYE, PC
901 NORTH GLEBE ROAD, 11TH FLOOR
ARLINGTON, VA 22203

Mail Date: 05/18/2010

Applicant : Anthony M. Ging
Patent Number : 7597100
Issue Date : 10/06/2009
Application No : 10/390,826
Filed : 03/19/2003

: NOTICE CONCERNING IMPROPER
: CALCULATION OF PATENT TERM
: ADJUSTMENT BASED UPON USPTO
: IMPROPERLY MEASURING REDUCTION
: PERIOD UNDER 37 CFR 1.704(c)(10).

The United States Patent and Trademark Office (USPTO) discovered that in processing the recent recalculation decisions mailed in response to patentee's filed Request for Recalculation of Patent Term Adjustment in view of Wyeth, the USPTO improperly measured the reduction period for reductions under 37 CFR 1.704(c)(10). Pursuant to 37 CFR 1.704(c)(10), patentee's reduction begins on the date of filing the amendment under 37 CFR 1.312 ("1.312 amendment") or other related paper and ends on the date that the Office mails a response to the filing of the 1.312 amendment or other paper. It has been discovered that during the recalculation, the calculation failed to the limit the reduction to the mail date of the response to the 1.312 amendment or other paper. Accordingly, patentee's reductions were greater than warranted.

This notice **VACATES** the previous GRANTED request for recalculation and provides patentee with a revised GRANTED recalculation.

The patent term adjustment has been determined to be **1201** days. The USPTO will *sua sponte* issue a certificate of correction reflecting the amount of patent term adjustment (PTA) days determined by the recalculation.

Prior to the issuance of the certificate of correction, the USPTO will afford patentee an opportunity to be heard and request reconsideration. Accordingly, patentee has **one month or thirty (30) days** from the mail date of this notice, whichever is longer, to file a request for reconsideration of this PTA calculation. See 35 U.S.C. § 154(b)(3)(B)(ii) and 37 CFR 1.322(a)(4).

Patentee should use document code PET.OP if electronically filing a request for reconsideration of this PTA calculation. The patentee must also include the information required by 37 CFR 1.705(b)(2), and the fee required by 37 CFR 1.18(e). If patentee does not file a timely request for reconsideration of this PTA calculation, including the information required by 37 CFR 1.705(b)(2) and the fee required by 37 CFR 1.18(e), the USPTO will issue a certificate of correction reflecting the PTA determination noted above.

Patentee should be aware that in order to preserve the right of review of the USPTO's PTA determination in the United States District Court for the District of Columbia, patentee must ensure that the steps required under 35 U.S.C. § 154 (b)(4) are taken in a timely manner. Nothing in the request for recalculation should be construed as providing an alternative time frame for commencing a civil action under 35 U.S.C. § 154(b)(4).

UNITED STATES PATENT AND TRADEMARK OFFICE

UNITED STATES DEPARTMENT OF COMMERCE
United States Patent and Trademark Office
Address: COMMISSIONER FOR PATENTS
P.O. Box 1450
Alexandria, Virginia 22313-1450
www.uspto.gov

APPLICATION NO.	FILING DATE	FIRST NAMED INVENTOR	ATTORNEY DOCKET NO.	CONFIRMATION NO.
10/390,838	03/18/2003	Michael F. Mays	1037-003	5963

34060 7590 08/20/2008
MICHAEL N. HAYNES
1341 HUNTERSFIELD CLOSE
KESWICK, VA 22947

EXAMINER
TO, TUAN C

ART UNIT	PAPER NUMBER
3663	

MAIL DATE	DELIVERY MODE
08/20/2008	PAPER

Please find below and/or attached an Office communication concerning this application or proceeding.

The time period for reply, if any, is set in the attached communication.

UNITED STATES PATENT AND TRADEMARK OFFICE

Commissioner for Patents
United States Patent and Trademark Office
P.O. Box 1450
Alexandria, VA 22313-1450
www.uspto.gov

MAILED
FROM DIRECTORS OFFICE

AUG 1 9 2008

TECHNOLOGY CENTER 3600

Michael N. Haynes
1341 Huntersfield Close
Keswick, VA 22947

In re Application of
Michael F. Mays
Application No. 10/390,838
Filed: March 18, 2003
For: METHOD AND SYSTEMS FOR VISUAL ADDRESSING

DECISION ON THE PETITION REGARDING REQUEST TO WITHDRAW FINALITY

Applicant's petition under 37 CFR 1.181, filed July 22, 2008, requests withdrawal of the finality of the Final Office action mailed May 22, 2008.

The petition is **GRANTED**.

Applicant alleges that the final rejection mailed May 22, 2008 is premature because the examiner did not respond to all of applicant's arguments traversing the examiner's rejection of claim 7.

It is noted that the Office action of May 22, 2008 is a first action Final.

A review of the record reveals that the claims were amended in conjunction with the filing of the RCE dated February 22, 2008.

Based on applicant's amendment to the claims, the Office action should not have been made Final. See MPEP 706.07(b)

The Finality of the Office action, but not the action itself, is hereby vacated. The Office action of May 22, 2008 is now being considered to be non-final and the shortened statutory period for response continues to run three (3) months from the date of mailing of the office action. A reply under 37 CFR 1.116 was filed concurrently with the instant petition. Accordingly, the response will be entered.

The application will be forwarded to the Head Supervisory Legal Instruments Examiner for removal of the "final" status from the May 22, 2008 action and for entry of the July 22, 2008 response and then to the examiner for consideration.

The petition for withdrawal of the finality is **GRANTED**.

Any questions or comments with respect to the decision should be forwarded to Supervisory Patent Examiner, Jack Keith at (571) 272-6878.

Donald T. Hajec, Director
Patent Technology Center 3600
(571) 272-5150

jwk/tl: 8/4/08

UNITED STATES PATENT AND TRADEMARK OFFICE

COMMISSIONER FOR PATENTS
UNITED STATES PATENT AND TRADEMARK OFFICE
P.O. BOX 1450
ALEXANDRIA, VA 22313-1450
www.uspto.gov

Paper No. 7

JEFFREY M. HOSTER
THE NUTRASWEET COMPANY
200 WORLD TRADE CENTER
MERCHANDISE MART, SUITE 936
CHICAGO, IL 60654

COPY MAILED

APR 1 9 2004

OFFICE OF PETITIONS

In re Application of	:	
Indra Prakash, et al.	:	
Application No. 10/390,846	:	ON PETITION
Filed: March 18, 2003	:	
Attorney Docket No. C-685	:	

This is a decision on the petition under 37 CFR 1.137(b), filed March 22, 2004, to revive the above-identified application.

The petition is **GRANTED.**

The above-identified application became abandoned for failure to reply in a timely manner to the Notice to File Missing Parts of Nonprovisional Application mailed May 9, 2003. The Notice set a period for reply of two (2) months from the mail date of the Notice. No extensions of time under the provisions of 37 CFR 1.136(a) were obtained. Accordingly, the above-identified application became abandoned on July 10, 2003.

The Power of Attorney and Change of Correspondence Address has been previously accepted and recorded.

Telephone inquiries concerning this decision should be directed to the undersigned at (703) 306-5594.

The application file is being forwarded to the Office of Initial Patent Examination for further processing.

Retta Williams

Retta Williams
Petitions Examiner
Office of Petitions
Office of the Deputy Commissioner
for Patent Examination Policy

UNITED STATES PATENT AND TRADEMARK OFFICE

Commissioner for Patents
United States Patent and Trademark Office
P.O. Box 1450
Alexandria, VA 22313-1450
www.uspto.gov

Paper No.

PAUL S MADAN
MADAN, MOSSMAN & SRIRAM, PC
2603 AUGUSTA, SUITE 700
HOUSTON TX 77057-1130

COPY MAILED

DEC 2 6 2006

OFFICE OF PETITIONS

In re Application of :
Peter Fontana : DECISION ON PETITION
Application No. 10/390,857 :
Filed: March 18, 2003 :
Atty Docket No. 014-27741-US :

This is in response to the PETITION TO WITHDRAW HOLDING OF ABANDONMENT UNDER 37 CFR 1.181(a) filed July 13, 2006.

The application became abandoned for failure to timely pay the issue fee and publication fee within the statutory period of three months from the mailing date of the Notice of Allowance mailed February 7, 2006. An authorization to charge the $300 publication fee and $1400 issue fee to a Deposit Account was received on March 29, 2006. However, when presented on March 30, 2006, the Deposit Account was found insufficient to pay the fees as the balance in Deposit Account No. 02-0429 was only $33.84. No further reply received and no extension of time obtainable, the application became abandoned effective May 8, 2006. A courtesy Notice of Abandonment was mailed on June 22, 2006.

Applicant replied with the instant petition. Applicant requests withdrawal of the holding of abandonment on the basis that the fees were timely paid by authorization to charge the Deposit Account filed March 29, 2006. Applicant generally states there must have been an error in processing the payment. Applicant does not address the insufficiency of the Deposit Account balance.

It is undisputed that the Issue Fee transmittal was timely received on March 29, 2006. However, the record also reveals no error in processing. Rather, funds were insufficient to pay the authorized fee.

As provided in 37 CFR 1.25(a), charges to accounts with insufficient funds will not be accepted. As the Deposit Account was insufficient when the issue fee and publication fee were presented, they were properly not accepted. Accordingly, the application became abandoned for failure to timely pay the issue fee (and publication fee). Under the circumstances, withdrawal of the holding of abandonment is not warranted.

The petition under 1.181 is **DISMISSED**.

No fee is required and none has been charged for consideration of this petition.

Any request for reconsideration must be submitted within **TWO (2) MONTHS** from the mail date of this decision. Extensions of time under 37 C.F.R. §1.136(a) are not permitted. See 1.181(f).

Alternatively, applicant may seek revival under the provisions of 37 CFR 1.137. Such a request should include a cover letter entitled "Petition under 37 C.F.R. § 1.137(a)" or "Petition under 37 C.F.R. § 1.137(b)," as appropriate. The filing of a petition to revive will be dismissed if it is found that its filing was intentionally delayed.

Further correspondence with respect to this decision should be addressed as follows:

By mail: Mail Stop Petition
Commissioner for Patents
P.O. Box 1450
Alexandria, VA 22313-1450

By fax: (571) 273-8300
ATTN: Office of Petitions

By hand: Customer Service Window
Randolph Building
401 Dulany Street
Alexandria, VA 22314

Telephone inquiries related to this decision should be directed to the undersigned at (571) 272-3219.

Nancy Johnson
Senior Petitions Attorney
Office of Petitions

UNITED STATES PATENT AND TRADEMARK OFFICE

Commissioner for Patents
United States Patent and Trademark Office
P.O. Box 1450
Alexandria, VA 22313-1450
www.uspto.gov

Paper No.

PAUL S MADAN
MADAN, MOSSMAN & SRIRAM, PC
2603 AUGUSTA, SUITE 700
HOUSTON TX 77057-1130

COPY MAILED

JAN 25 2007

OFFICE OF PETITIONS

In re Application of	:	
Peter Fontana	:	DECISION ON PETITION
Application No. 10/390,857	:	
Filed: March 18, 2003	:	
Atty Docket No. 014-27741-US	:	

This is a decision on the PETITION FOR REVIVAL OF AN APPLICATION FOR PATENT ABANDONED UNINTENTIONALLY UNDER 37 CFR § 1.137(b) filed January 8, 2007.

The petition under § 1.137(b) is **GRANTED**.

The application became abandoned for failure to timely pay the issue fee and publication fee within the statutory period of three months from the mailing date of the Notice of Allowance mailed February 7, 2006. An authorization to charge the $300 publication fee and $1400 issue fee to a Deposit Account was received on March 29, 2006. However, when presented on March 30, 2006, the Deposit Account was found insufficient to pay the fees as the balance in Deposit Account No. 02-0429 was only $33.84. No further reply received and no extension of time obtainable, the application became abandoned effective May 8, 2006. A courtesy Notice of Abandonment was mailed on June 22, 2006.

By decision mailed December 26, 2006, the petition to withdraw the holding of abandonment filed July 13, 2006 was dismissed. Petitioner did not overcome the evidence of record that the

Deposit Account did not have sufficient funds to pay the fees when presented.

On instant renewed petition, applicant continues to request withdrawal of the holding of abandonment but also requests revival based on the abandonment being unintentional.

Petitioner has not submitted any additional evidence to warrant a conclusion that withdrawal of the holding of abandonment is warranted. Accordingly, the holding of abandonment will not be withdrawn.

Nonetheless, applicant has met the requirements for revival of the application. The petition includes the required reply in the form of payment of the Issue Fee and Publication Fee, and payment of the petition fee set forth in 37 CFR § 1.17(m). the statement of unintentional delay varies from the required language in 37 CFR § 1.137(b). Applicant's statement referring to the application unintentionally abandoned is being construed as the statement required by 37 CFR § 1.137(b). If this is not a correct reading of the statement appearing in the petition, petitioner must promptly notify the Office. No terminal disclaimer is required.

The Office of Patent Publication has been advised of this decision.

Telephone inquiries related to this decision should be directed to the undersigned at (571) 272-3219.

Nancy Johnson
Senior Petitions Attorney
Office of Petitions

UNITED STATES PATENT AND TRADEMARK OFFICE

Commissioner for Patents
United States Patent and Trademark Office
P.O. Box 1450
Alexandria, VA 22313-1450
www.uspto.gov

BLANK ROME LLP
600 NEW HAMPSHIRE AVENUE, N.W.
WASHINGTON, DC 20037

COPY MAILED

JUL 06 2007

OFFICE OF PETITIONS

In re Application of:
Patterson, et al.
Application No. 10/390,881
Filed: March 19, 2003
Attorney Docket No. 116578.0010

DECISION ON PETITION

This is a decision on the petition under 37 CFR §1.137(b), February 6, 2007, to revive the above-identified application.

The petition is **granted.**

This application became abandoned for failure to file corrected drawings as required by the Notice of Allowability mailed October 7, 2004. The notice set forth a three (3) month statutory period for reply. Accordingly, this application became abandoned on January 8, 2004. A Notice of Abandonment was mailed on March 14, 2005.

The above-identified application has been abandoned for an extended period of time. The Patent and Trademark Office is relying on petitioner's duty of candor and good faith and accepting the statement that the entire delay in filing the required reply form the due date for the reply until the filing of a grantable petition pursuant to 37 CFR 1.137(b) was unintentional. See Changes to Patent Practice and Procedure, 62 Fed. Reg. at 53160 and 53178; 1203 Off. Gaz. Pat. Office at 88 and 103 (responses to comments 64 and 109) (applicant obligated under 37 CFR 10.18 to inquire into the underlying facts and circumstances when providing the statement required by 37 CFR 1.137(b) to the Patent and Trademark Office.

It is not apparent whether the person signing the statement of unintentional delay was in a position to have firsthand or direct knowledge of the facts and circumstances of the delay at issue. Nevertheless, such statement is being treated as having been made as the result of a reasonable inquiry into the facts and circumstances of such delay. See 37 CFR 10.18(b) and Changes to Patent Practice and Procedure; Final Rule Notice, 62 Fed. Reg. 53131, 53178 (October 10, 1997), 1203 Off. Gaz. Pat. Office 63, 103 (October 21, 1997). In the event that such an inquiry has not been made, petitioner must make such an inquiry. If such inquiry results in the discovery that it is not correct that the entire delay in filing the required reply from the due date for the reply until the filing of a grantable petition pursuant to 37 CFR 1.137(b) was unintentional, petitioner must notify the Office.

There is no indication that the person signing the instant petition was ever given a power of attorney or authorization of agent to prosecute the above-identified application. If the person signing the instant petition desires to receive future correspondence regarding this application, the appropriate power of attorney or authorization of agent must be submitted. While a courtesy copy of this decision is being mailed to the person signing the instant petition, all future correspondence will be directed to the address of currently of record until such time as appropriate instructions are received to the contrary.

The application is being forwarded to the Office of Patent Publications for processing into a patent.

Telephone inquiries concerning this matter may be directed to the undersigned at (571) 272-3222.

Kenya A. McLaughlin
Petitions Attorney
Office of Petitions

Cc:
George P. Kobler
PO Box 2087
Huntsville, AL 35804-2087

SPE RESPONSE FOR CERTIFICATE OF CORRECTION

Paper No.: —

DATE : 1/11/05

TO SPE OF : ART UNIT 2834

SUBJECT : Request for Certificate of Correction on Patent No.: 6794790 B2

A response is requested with respect to the accompanying request for a certificate of correction.

Please complete this form and return with file, within **7** days to:
Certificates of Correction Branch - PK 3-915
Palm location **7580** - Tel. No. 305-8309

With respect to the change(s) requested, correcting Office and/or Applicant's errors, should the patent read as shown in the certificate of correction? No new matter should be introduced, nor should the scope or meaning of the claims be changed.

Virginia Tolbert

Thank You For Your Assistance

Certificates of Correction Branch

The request for issuing the above-identified correction(s) is hereby:
Note your decision on the appropriate box.

- ☒ **Approved** — All changes apply.
- ☐ **Approved in Part** — Specify below which changes **do not** apply.
- ☐ **Denied** — State the reasons for denial below.

Comments:

DARREN SCHUBERG
SUPERVISORY PATENT EXAMINER
TECHNOLOGY CENTER 2800

SPE

2834

Art Unit

UNITED STATES PATENT AND TRADEMARK OFFICE

Commissioner for Patents
United States Patent and Trademark Office
P.O. Box 1450
Alexandria, VA 22313-1450
www.uspto.gov

T. Christian A. Schlumbrecht
5521 Elysian Fields Ave.
New Orleans LA 70122

COPY MAILED

FEB 04 2005

OFFICE OF PETITIONS

In re Application of	:	
Schlumbrecht	:	
Application No. 10/390,931	:	ON PETITION
Filed: March 19, 2003	:	
For: River Card Poker	:	

This is a decision on the petition under 37 CFR 1.137(a), filed on November 2, 2004, to revive the above-identified application.

The petition is **DISMISSED**.

Any request for reconsideration of this decision must be submitted within TWO (2) MONTHS from the mail date of this decision. Extensions of time under 37 CFR 1.136(a) are permitted. The reconsideration request should include a cover letter entitled "Renewed Petition under 37 CFR 1.137(a)" or "Petition under 37 CFR 1.137(b)." This is not a final agency decision.

This application became abandoned on April 30, 2004, for failure to submit a timely reply to the nonfinal Office action mailed on January 29, 2004, which set a three (3) month shortened statutory period for reply. A Notice of Abandonment was mailed on January 9, 2004.

Petitioner asserts that a reply to the nonfinal Office action in was timely filed with the USPTO. Specifically, petitioner states:

> My office was in receipt of the office action on January 29, 2004 and the response was sent out of my office in February 2004. It is my wish that the application be considered for revival due to the undeliverable response of the office action.

A grantable petition to revive an abandoned application under 37 CFR 1.137(a) must be accompanied by:

(1) the required reply, unless previously filed. In a nonprovisional application abandoned for failure to prosecute, the required reply may be met by the filing of a continuing application. In a nonprovisional application filed on or after June 8, 1995, and abandoned for failure to prosecute, the required reply may also be met by the filing of a request for continued examination in compliance with § 1.114. In an application or patent, abandoned or lapsed for failure to pay the issue fee or any portion thereof, the required reply must be the payment of the issue fee or any outstanding balance thereof;

(2) the petition fee as set forth in § 1.17(l);

(3) a showing to the satisfaction of the Commissioner that the entire delay in filing the required reply from the due date for the reply until the filing of a grantable petition pursuant to this paragraph was unavoidable; and

(4) any terminal disclaimer (and fee as set forth in § 1.20(d)) required pursuant to paragraph (c) of this section.

This petition lacks items (1) and (3) above.

As to item (1), petitioner states that he timely filed an amendment in response to the nonfinal Office Action in February 2004. Petitioner does not indicate the exact date he filed the response in February of 2004. A review of the file does not indicate receipt of an amendment or any other proper reply to the nonfinal Office action. Moreover, petitioner did not submit a copy of the amendment with the present petition.

In any renewed petition, petitioner must submit a response to the nonfinal Office action. The proposed reply required for consideration of a petition to revive must be an amendment, a request for reconsideration or the filing of a continuing application.

As to item (3), decisions on reviving abandoned applications on the basis of "unavoidable" delay have adopted the reasonably prudent person standard in determining if the delay was unavoidable:

> The word 'unavoidable' . . . is applicable to ordinary human affairs, and requires no more or greater care or

> diligence than is generally used and observed by prudent and careful men in relation to their most important business. It permits them in the exercise of this care to rely upon the ordinary and trustworthy agencies of mail and telegraph, worthy and reliable employees, and such other means and instrumentalities as are usually employed in such important business. If unexpectedly, or through the unforeseen fault or imperfection of these agencies and instrumentalities, there occurs a failure, it may properly be said to be unavoidable, all other conditions of promptness in its rectification being present.[1]

The showing of record is inadequate to establish unavoidable delay within the meaning of 37 CFR 1.137(a). Specifically, an application is "unavoidably" abandoned only where petitioner, or counsel for petitioner, takes all action necessary for a proper response to the outstanding Office action, but through the intervention of unforeseen circumstances, such as failure or mail, telegraph, facsimile, or the negligence of otherwise reliable employees, the response is not timely received in the Office.[2]

Petitioner contends that the delay occurred because the USPTO did not receive the response, which he filed timely. As stated previously, a review of the record reveals that the intended response is not located therein. Furthermore, petitioner did not submit any evidence to support his assertion. A petitioner who alleges that a paper was filed in the Office and later misplaced has the burden of proving the allegation by a preponderance of the evidence.

To establish timely mailing of the reply, petitioner should have submitted a copy of the reply, showing the utilization of the certificate of mailing procedure specified in 37 CFR 1.8 or the submission of an itemized date-stamped return postcard in accordance with MPEP 503. A postcard receipt which itemizes and properly identifies the papers which are being filed serves as

---

[1] In re Mattullath, 38 App. D.C. 497, 514-15 (1912)(quoting Ex parte Pratt, 1887 Dec. Comm'r Pat. 31, 32-33 (1887)); see also Winkler v. Ladd, 221 F. Supp. 550, 552, 138 USPQ 666, 167-68 (D.D.C. 1963), aff'd, 143 USPQ 172 (D.C. Cir. 1963); Ex parte Henrich, 1913 Dec. Comm'r Pat. 139, 141 (1913). In addition, decisions on revival are made on a "case-by-case basis, taking all the facts and circumstances into account." Smith v. Mossinghoff, 671 F.2d 533, 538, 213 USPQ 977, 982 (D.C. Cir. 1982). Finally, a petition cannot be granted where a petitioner has failed to meet his or her burden of establishing that the delay was "unavoidable." Haines v. Quigg, 673 F. Supp. 314, 316-17, 5 USPQ2d 1130, 1131-32 (N.D. Ind. 1987).

[2] Ex parte Pratt, 1887 Dec. Comm'r Pat. 31 (Comm'r Pat. 1887).

prima facie evidence of receipt in the USPTO of all of the items listed thereon on the date stamped thereon by the USPTO.[3] In the absence of an itemized postcard receipt, there is no evidence to show that the papers were timely received in the USPTO. The Office has a well established and well publicized practice of providing a receipt for papers filed in the Office to any applicant desiring a receipt. The practice requires that any paper for which a receipt is desired be filed in the Office with a self-addressed postcard identifying the paper. A postcard receipt which itemizes and properly identifies the papers which are being filed serves as *prima facie* evidence of receipt in the Office of all the items listed thereon on the date stamped by the Office. See MPEP 503.

Upon review of the record, the Office finds that petitioner provided inadequate proof that the reply to the nonfinal Office action was filed timely. A delay resulting from the lack of knowledge or improper application of the patent statute, rules of practice or the MPEP does not constitute an "unavoidable" delay.[4]

In any renewed petition, petitioner must submit a copy of the amendment alleged to have been timely filed accompanied by a timely certificate of mailing as specified in 37 CFR 1.8 or an itemized return postcard in accordance with MPEP 503 to establish timely mailing of the reply. In the absence of such, there is no evidence to show that the response was received timely in the USPTO.

As petitioner has presented no showing of unavoidable delay, the petition is dismissed.

ALTERNATIVE VENUE

Petitioner may wish to consider filing a renewed petition under 37 CFR 1.137(b), which provides that where the delay in reply was unintentional, a petition may be filed to revive an abandoned application or a lapsed patent pursuant to 37 CFR 1.137(b). A grantable petition pursuant to 37 CFR 1.137(b) must be accompanied by:

---

[3] MPEP 503.

[4] See Haines v. Quigg, 673 F. Supp. 314, 317, 5 USPQ2d 1130, 1132 (N.D. Ind. 1987), Vincent v, Mossinghoff, 230 USPQ 621, 624 (D.D.C. 1985); Smith v. Diamond, 209 USPQ 1091 (D.D.C. 1981); Potter v. Dann, 201 USPQ 574 (D.D.C. 1978); Ex parte Murray, 1891 Dec. Comm'r Pat. 130, 131 (1891).

(1) the required reply, unless previously filed. In a nonprovisional application abandoned for failure to prosecute, the required reply may be met by the filing of a continuing application. In a nonprovisional utility or plant application filed on or after June 8, 1995, and abandoned for failure to prosecute, the required reply may also be met by the filing of a request for continued examination in compliance with § 1.114. In an application or patent, abandoned or lapsed for failure to pay the issue fee or any portion thereof, the required reply must be the payment of the issue fee or any outstanding balance thereof.

(2) the petition fee as set forth in 37 CFR 1.17(m);

(3) a statement that the entire delay in filing the required reply from the due date for the reply until the filing of a grantable petition pursuant to 37 CFR 1.137(b) was unintentional. The Commissioner may required additional information where there is a question whether the delay was unintentional; and

(4) any terminal disclaimer (and fee as set forth in 37 CFR 1.20(d)) required pursuant to 37 CFR 1.137(c)).

The filing of a petition under the unintentional standard cannot be intentionally delayed and therefore should be filed promptly. A person seeking revival due to unintentional delay cannot make a statement that the delay was unintentional unless the entire delay, including the delay from the date it was discovered that the application was abandoned until the filing of the petition to revive under 37 CFR 1.137(b), was unintentional. A statement that the delay was unintentional is not appropriate if petitioner intentionally delayed the filing of a petition for revival under 37 CFR 1.137(b).

Should petitioner decide to file a petition under 37 CFR 1.137(b), the additional petition fee due would be $750.00. A copy of the form for filing a petition under 37 CFR 1.137(b) to revive an application unintentionally abandoned is enclosed herewith for petitioner's convenience.

Further correspondence with respect to this matter should be addressed as follows:

By mail: Mail Stop Petition
Commissioner for Patents
P.O. Box 1450
Alexandria, VA 22313-1450

By FAX: (703) 872-9306
Attn: Office of Petitions

By hand: Customer Service Window
Randolph Building
401 Dulany Street
Alexandria, VA 22314

Telephone inquiries concerning this matter may be directed to the undersigned at (571) 272-3211.

Christina Tartera Donnell

Christina Tartera Donnell
Senior Petitions Attorney
Office of Petitions

Enclosures: Form PTO/SB/64

UNITED STATES PATENT AND TRADEMARK OFFICE

Commissioner for Patents
United States Patent and Trademark Office
P.O. Box 1450
Alexandria, VA 22313-1450
www.uspto.gov

FEB 10 2005

In re Application of :
T. Christian A. Schlumbrecht :
Application No. 10/390,931 : DECISION ON PETITION
Filed: March 19, 2003 :
For: River Card Poker :

This is a decision on the petition filed on November 2, 2004. Although styled as a petition to revive an unavoidably abandoned application under 37 CFR 1.137, the petition is being considered as a petition to withdraw the holding that this application stands abandoned for failure to file a timely and proper reply to the Office letter dated January 29, 2004. As the petition is considered pursuant to 37 CFR 1.181 no fee is required. A refund of the $55.00 fee tendered with the petition will be scheduled in due course.

The petition is dismissed.

Petitioner alleges that this application is not abandoned because petitioner did in fact file a timely and proper reply to the Office letter in question. However, petitioner has not furnished any evidence in support of this allegation. Petitioner merely states that his office received the Office action in question on January 29, 2004 and that a response thereto was sent out of petitioner's office in February 2004

As a general rule, correspondence is considered to have been filed in the Office when received in the Office. Certain exceptions are set forth in section 1.6 of Title 37 of the Code of Regulations. None of those exceptions is relevant here, since petitioner does not allege that the correspondence alleged to have been mailed in response to the Office letter in question was deposited with the United States Postal Service either as first class mail utilizing a certificate of mailing pursuant to 37 CFR 1.8, or as Express Mail Post Office to Address utilizing the procedures established by 37 CFR 1.10. Therefore, a grantable petition to withdraw the holding of abandonment would require, in addition to merely alleging that a reply had been filed, that petitioner furnish a copy of that reply together with evidence showing actual receipt of the reply in the Office on or before the due date for the reply (in this case on or before April 30, 2004) or after the due date but not later than July 29, 2004 (the last day of the maximum period of six months from the date of the Office letter as required by Section 133 of Title 35 of the United States Code) together with a petition for an extension of time and the fee for the petition.

As petitioner has not furnished any evidence to show that a reply to the Office letter dated January 29, 2004 was timely filed in the Office, the petition to withdraw the holding of abandonment cannot be granted.

Petitioner may file a renewed petition, without fee, presenting any additional evidence showing that a reply to the Office letter in question was in fact timely filed. The evidence must establish actually receipt in the Office of the reply as set forth above; that is, either that the reply was received in the Office on or before April 30, 2004, or thereafter but not later than July 29, 2004. If filed after April 30, 2004 but not later than July 29, 2004, petitioner must also show that an appropriate extension of time was requested, that the fee therefor was tendered, and evidence establishing the date upon which the petition for extension of time and the fee for the extension were filed. Any such renewed petition must be filed within two months of the date of this decision, pursuant to 37 CFR 1.181(f).

Alternatively, petitioner may wish to file a petition under 37 CFR 1.137. Applicant is advised that if evidence establishing the timely filing of a reply to the Office action dated January 29, 2004 cannot be provided, then the abandonment of this application may only be overcome by filing a petition to revive under 37 CFR 1.137.

A petition to revive may be appropriate if applicant's failure to respond or to timely respond was either unavoidable or unintentional, as set forth below.

A. Failure to respond was unavoidable.

A petition to revive an abandoned application on the grounds that the failure to respond was unavoidable (37 CFR 1.137(a)) must be accompanied by a showing that the entire delay in filing the required reply from the due date thereof until the filing of a grantable petition under 37 CFR 1.137(a) was unavoidable delay, by a proposed reply, and by the petition fee of $ 250.00 for a small entity, or $500.00 for a large entity. No consideration to the substance of a petition will be given until this fee is received.

B. Failure to respond was unintentional.

A petition to revive an abandoned application on the grounds that the failure to respond was unintentional (37 C.F.R. 1.137(b)) must be accompanied by a statement that the entire delay in filing the required reply until the filing of a grantable petition pursuant to 37 CFR 1.137(b) was unintentional, the required reply unless it has been previously filed, and the petition fee of $ 750.00 for a small entity, or $1,500.00 for a large entity.

Correspondence with respect to a petition to revive should be sent in an envelope addressed to:

Mail Stop Petition
Commissioner for Patents
Box 1450
Alexandria, VA 22313-1450

Please mark the correspondence to the attention of the Office of Petitions.

As discussed in a conversation between petitioner and Stephen Marcus, Special Program Examiner in Technology Center 3700, a copy of a form for filing a petition to revive under 37 CFR 1.137(a), a copy of a form for filing a petition to revive under 37 CFR 1.137(b), a copy of a from for use as a certificate of mailing under 37 CFR 1.8 and a copy of a transmittal letter for the filing of multiple papers directed to one application, and including a 37 CFR 1.8 certification statement, are attached to this Decision.

PETITION DISMISSED.

E. R. Kazenske, Director
Technology Center 3700

Attachments

T. Christian A. Schlumbrecht
5521 Elysian Fields Ave.
New Orleans, LA 70122

UNITED STATES PATENT AND TRADEMARK OFFICE

Commissioner for Patents
United States Patent and Trademark Office
P.O. Box 1450
Alexandria, VA 22313-1450
www.uspto.gov

GARVEY SMITH NEHRBASS & DOODY, LLC
THREE LAKEWAY CENTER
3838 NORTH CAUSEWAY BLVD., SUITE 3290
METAIRIE LA 70002

COPY MAILED

MAY 23 2005

OFFICE OF PETITIONS

In re Application of
Schlumbrecht
Application No. 10/390,931
Filed: March 19, 2003
For: River Card Poker

DECISION ON PETITION

In re Application of
Schlumbrecht
Application No. 10/470,644
Filed: November 2, 2004
Attorney Docket No. A05324US
(98797.2)

This is a decision on the renewed petition under 37 CFR 1.137(b), filed on February 23, 2005, to revive the above-identified application. This is also in response to the supplemental petition filed on May 17, 2005, which is being treated as a petition under 37 CFR 1.181, requesting that the Office consider the reply to the nonfinal Office Action in the form of a continuation-in-part application as timely filed.

This application became abandoned on April 30, 2004, for failure to submit a timely reply to the nonfinal Office action mailed on January 29, 2004, which set a three (3) month shortened statutory period for reply. A Notice of Abandonment was mailed on January 9, 2004.

In the present petition, applicant asserts in February of 2004, he filed a request for a continuation-in-part application (CIP application) of prior application No. 10/390,931 in response to the nonfinal Office action. Applicant explains that the Office incorrectly classified the CIP as "NPL Documents" in the prior

application with the wrong "Mail Room Date" of March 19, 2003. Applicant explains that he does not have a certificate of mailing, postcard receipt or a USPTO date stamp to support the allegation that he filed the CIP application in February of 2004. Applicant further states that on November 2, 2004, he resubmitted the CIP application with the original petition. The Office treated the petition filed on November 2, 2004, as a petition under 37 CFR 1.137(a) and a petition to withdraw the holding of abandonment, which were both dismissed by the decisions of February 4, 2005, and February 10, 2005, respectively. Applicant is reminded that the burden is on applicant to establish to the satisfaction of the Commissioner the date the CIP application was filed with the USPTO.

Upon further review, although applicant did not submit an "Application Transmittal," it appears that applicant intended to file a CIP application of prior application, No. 10/390,931. Specifically, on November 2, 2004, applicant filed a specification, claims, abstract, and drawings. The specification states: "This is a continuation-in-part of co-pending U.S. Patent Application Serial No. 10/390,931, filed March 19, 2003, which is incorporated herein by reference."

Unfortunately, applicant did not submit sufficient evidence that he filed a timely response in the form of a CIP application in February of 2004. Therefore, the petition under 37 CFR 1.181 is dismissed. The application papers will be treated as a CIP application under 37 CFR 1.53(b) and accorded a filing date of November 2, 2004.

The CIP application under 37 CFR 1.53(b) filed on November 2, 2004, has been assigned application No. 10/470,644. The CIP application papers as filed on November 2, 2004, and the Power of Attorney and Correspondence Indication Form for the CIP application have been "closed" in the Image File Wrapper for application No. 10/390,931 and have been placed in application No. 10/470,644. A copy of the supplemental petition submitted on May 17, 2005, will be placed in application No. 10/470,644.

All future correspondence regarding the CIP application, filed November 2, 2004, should be directed to application No. 10/470,644, not application No. 10/390,931.

Applicant has met the requirements of 37 CFR 1.137(b). Accordingly, the renewed petition under 37 CFR 1.137(b) is granted to the extent indicated above.

Application No. 10/390,931 is being revived solely for purposes of continuity. As continuity has been established by this decision reviving the application, the application is again abandoned in favor of the CIP application, No. 10/470,644, filed on November 2, 2004.

Application No. 10/470,644 will be forwarded to the Office of Initial Patent Examination to process the application as a continuation-in-part application filed under 37 CFR 1.53(b) with a filing date of November 2, 2004, using the application papers submitted on that date, and to mail a corrected filing receipt. Additionally, the Office is directed to mail a Notice to File Missing Parts of Nonprovisional Application to applicant in Application No. 10/470,644, requiring the submission of an oath/declaration, the filing fees, and a surcharge for their late filing.

Telephone inquiries concerning this matter may be directed to the undersigned at (571) 272-3211.

Christina Tartera Donnell

Christina Tartera Donnell
Senior Petitions Attorney
Office of Petitions

UNITED STATES PATENT AND TRADEMARK OFFICE

COMMISSIONER FOR PATENT
UNITED STATES PATENT AND TRADEMARK OFFIC
WASHINGTON, D.C. 20231
www.uspto.go

Paper No. 4

Joseph E. Tessari, Esquire
Tyco Technology Resources
4550 New Linden Hill Road, Suite 140
Wilmington, DE 19808-2952

AUG 18 2003

In re Application of:
BRINDLE *et al.*
Application No. 10/390,957
Filed: March 18, 2003
Attorney Docket No. 17943

DECISION ON PETITION
TO MAKE SPECIAL

This is a decision on the petition under 37 C.F.R. § 1.102, filed March 18, 2003, to make the above-identified application special.

The petition is being treated as a request that the above-identified application be made special under the accelerated examination procedure set forth in the Manual of Patent Examining Procedure (M.P.E.P.), Section 708.02, Item VIII: Accelerated Examination.

A grantable petition to make special under 37 C.F.R. § 1.102 and in accordance with M.P.E.P., Section 708.02, Item VIII, must be accompanied by (a) the fee set forth in 37 C.F.R. § 1.17(h), (b) a statement that all claims are directed a single invention or an offer to make an oral election without traverse should the Patent and Trademark Office hold that the claims are not directed to a single invention, (c) a statement that a pre-examination search has been made by the inventor, attorney, agent, professional searcher, etc., and a listing of the field of search by class and subclass, (d) one copy of each of the references deemed most closely related to the subject matter encompassed by the claims, and (e) a detailed description of the submitted references and discussions pointing out how the claimed subject matter is distinguishable over these references.

The petition satisfies the above requirements. Accordingly, the petition is **GRANTED**.

If the examiner can make this application special without prejudice to any possible interfering applications, and he/she should make a rigid search for such, he/she is authorized to do so for the next action. Should the application be rejected, the application will not be considered special for the subsequent action unless the applicant promptly makes a bona fide effort to place the application in condition for allowance, even if it is necessary to have an interview with the examiner to accomplish this purpose.

If the examiner finds any interfering application for the same subject matter, he/she should consider

such application simultaneously with this application and should state in the official letter of such application that she/he is taking it out of its turn because of possible interference.

Should an appeal be taken in this application or should this application becomes involved in an interference, consideration of the appeal and the interference will be expedited by all Patent and Trademark Office officials concerned, contingent likewise upon diligent prosecution by the applicant.

After allowance, this application will be given priority for printing. See M.P.E.P. § 1309.

Inquiries regarding this decision should be directed to Clayton E. LaBalle at (703) 308-0519.

Clayton E. LaBalle, Special Programs Examiner
Technology Center 2800
Semiconductors, Electrical and Optical
Systems and Components

UNITED STATES PATENT AND TRADEMARK OFFICE

Commissioner for Patents
United States Patent and Trademark Office
P.O. Box 1450
Alexandria, VA 22313-1450
www.uspto.gov

BELL, BOYD AND LLOYD, LLP
P. O. BOX 1135
CHICAGO, IL 60690

COPY MAILED

MAR 19 2007

OFFICE OF PETITIONS

In re Application of	:	
Jerry E. Buchanan et al	:	
Application No. 10/390,959	:	ON PETITION
Filed: March 18, 2003	:	
Attorney Docket No. 112701-362	:	

This is a decision on the petition under 37 CFR 1.137(b), filed September 6, 2006, to revive the above-identified application.

The petition is **GRANTED**.

The application became abandoned for failure to submit formal drawings on or before July 3, 2006 in reply to the Notice of Allowability, mailed April 3, 2006, which set a period for reply of three (3) months. Accordingly, this application became abandoned on July 4, 2006. A Notice of Abandonment was mailed on August 18, 2006.

The petition satisfies the requirements of 37 CFR 1.137(b) in that petitioner has supplied (1) the required reply in the form of drawings, (2) the petition fee of $1,500, and (3) a proper statement of unintentional delay. Accordingly, the failure to timely reply to the Notice of April 3, 2006 is accepted as being unintentionally delayed.

This application is being referred to Publishing Division.

Telephone inquiries concerning this decision should be directed to the undersigned at (571) 272-3218.

Frances Hicks

Frances Hicks
Petitions Examiner
Office of Petitions

UNITED STATES PATENT AND TRADEMARK OFFICE

Commissioner for Patents
United States Patent and Trademark Office
P.O. Box 1450
Alexandria, VA 22313-1450
www.uspto.gov

NOVO NORDISK, INC.
PATENT DEPARTMENT
100 COLLEGE ROAD WEST
PRINCETON NJ 08540

COPY MAILED

MAR 1 6 2006

OFFICE OF PETITIONS

In re Application of
Mads Christian SABRA
Application No. 10/390,981
Filed: March 18, 2003
Attorney Docket No. 6339.200-US

ON PETITION

This is a decision on petition under 37 CFR 1.137(b), filed on February 1, 2006, to revive the above-identified application.

The petition is **GRANTED**.

The above-identified application became abandoned for failure to reply in a timely manner to the Restriction Requirement mailed on July 20, 2005, which set a shortened statutory period for reply of one (1) month or thirty (30) days (whichever is later). No extensions of time under the provisions of 37 CFR 1.136(a) were obtained. Accordingly, the application became abandoned, by operation of law, on August 21, 2005.

The petition satisfies the conditions for revival pursuant to the provisions of 37 CFR 1.137(b) in that (1) a reply in the form of the Response to The Restriction Requirement; (2) the petition fee of $1500; and (3) the required statement of unintentional delay have been received. Accordingly, the reply to the Restriction Requirement mailed on July 20, 2005 is accepted as having been unintentionally delayed.

Telephone inquiries concerning this decision should be directed to Anatoly Vortman at (571) 272-6051, or in his absence to the undersigned at (571) 272-7099.

The application file is being referred to Technology Center AU 3767 for appropriate action on the reply.

David Buccl
Petitions Examiner
Office of Petitions

UNITED STATES PATENT AND TRADEMARK OFFICE

Commissioner for Patents
United States Patent and Trademark Office
P.O. Box 1450
Alexandria, VA 22313-1450
www.uspto.go

MAILED

MAR 26 2009

TECHNOLOGY CENTER 2100

BAKER BOTTS L.L.P.
2001 ROSS AVENUE
SUITE 600
DALLAS, TX 75201-2980

In re Application of: JAIN, et al.
Application No. 10/390,982
Filed: March 17, 2003
For: SYSTEM AND METHOD FOR EVALUATING AN ERRONEOUS STATE ASSOCIATED WITH A TARGET CIRCUIT

DECISION GRANTING PETITION TO RESET PERIOD FOR REPLY

This is a decision on the petition filed on March 16, 2009 requesting that the period for reply set forth in the Office communication (Notice of Panel Decision from Pre-Appeal Brief Review) mailed on October 22, 2008 be reset and the decision remailed.

The petition is **GRANTED**.

Petitioner provided a statement that the Office communication in question was not received at the correspondence address of record. In addition, Petitioner provided: a statement that the docket records were searched; a copy of email notifications and docket records at the address of record; as well as reference to the notifications and docket records. USPTO records do not indicate that an electronic email notification of the Notice of Panel Decision was sent to Applicant. However, Petitioner states in the petition that on January 27, 2009, Applicant "reviewed the information in Private PAIR for this application, discovered that a panel decision had in fact been made ... downloaded the Notice of Panel Decision having a mailing date of October 22, 2008 from Private PAIR".

Accordingly, the Petition is **GRANTED**.

Therefore, the 30 day response period for the original Notice of Panel Decision mailed October 22, 2008, is **hereby reset** to run from the admitted date of discovering and viewing on PAIR of **January 27, 2009**. In addition, a review of the file record shows that Applicant timely filed an Appeal Brief on February 23, 2009. Please note, a courtesy copy of the October 22, 2008 Notice of Panel Decision is attached hereto.

The application is being forwarded to the Examiner for prompt consideration of the Appeal Brief filed on February 23, 2009 in accordance with this decision.

Any inquiry concerning this decision should be directed to Brian Johnson whose telephone is (571) 272-3595.

Brian L. Johnson
Quality Assurance Specialist
Technology Center 2100
Computer Architecture, Software, and Information Security

UNITED STATES PATENT AND TRADEMARK OFFICE

UNITED STATES DEPARTMENT OF COMMERCE
United States Patent and Trademark Office
Address: COMMISSIONER FOR PATENTS
P.O. Box 1450
Alexandria, Virginia 22313-1450
www.uspto.gov

APPLICATION NO.	FILING DATE	FIRST NAMED INVENTOR	ATTORNEY DOCKET NO.	CONFIRMATION NO.
10/390,982	03/17/2003	Jawahar Jain	073338.0122(02-52764 FLA)	5097

5073 7590 10/22/2008
BAKER BOTTS L.L.P.
2001 ROSS AVENUE
SUITE 600
DALLAS, TX 75201-2980

EXAMINER
NGUYEN, STEVE N

ART UNIT	PAPER NUMBER
2117	

MAIL DATE	DELIVERY MODE
10/22/2008	PAPER

Please find below and/or attached an Office communication concerning this application or proceeding.

The time period for reply, if any, is set in the attached communication.

Notice of Panel Decision from Pre-Appeal Brief Review	Application/Control No.	Applicant(s)/Patent under Reexamination
	10/390,982	JAIN ET AL.
	STEVE N. NGUYEN	Art Unit 2117

This is in response to the Pre-Appeal Brief Request for Review filed 19 September 2008.

1. ☐ **Improper Request** – The Request is improper and a conference will not be held for the following reason(s):

☐ The Notice of Appeal has not been filed concurrent with the Pre-Appeal Brief Request.
☐ The request does not include reasons why a review is appropriate.
☐ A proposed amendment is included with the Pre-Appeal Brief request.
☐ Other:

The time period for filing a response continues to run from the receipt date of the Notice of Appeal or from the mail date of the last Office communication, if no Notice of Appeal has been received.

2. ☒ **Proceed to Board of Patent Appeals and Interferences** – A Pre-Appeal Brief conference has been held. The application remains under appeal because there is at least one actual issue for appeal. Applicant is required to submit an appeal brief in accordance with 37 CFR 41.37. The time period for filing an appeal brief will be reset to be one month from mailing this decision, or the balance of the two-month time period running from the receipt of the notice of appeal, whichever is greater. Further, the time period for filing of the appeal brief is extendible under 37 CFR 1.136 based upon the mail date of this decision or the receipt date of the notice of appeal, as applicable.

☒ The panel has determined the status of the claim(s) is as follows:
Claim(s) allowed: _____.
Claim(s) objected to: _____.
Claim(s) rejected: *1-28*.
Claim(s) withdrawn from consideration: _____.

3. ☐ **Allowable application** – A conference has been held. The rejection is withdrawn and a Notice of Allowance will be mailed. Prosecution on the merits remains closed. No further action is required by applicant at this time.

4. ☐ **Reopen Prosecution** – A conference has been held. The rejection is withdrawn and a new Office action will be mailed. No further action is required by applicant at this time.

All participants:

(1) *STEVE N. NGUYEN*.

(2) *MUJTABA K. CHAUDRY*.

(3) */Jacques Louis-Jacques/*.

(4)_____.

/JACQUES H LOUIS-JACQUES/
Supervisory Patent Examiner, Art Unit 2100

UNITED STATES PATENT AND TRADEMARK OFFICE

UNITED STATES DEPARTMENT OF COMMERCE
United States Patent and Trademark Office
Address: COMMISSIONER FOR PATENTS
P.O. Box 1450
Alexandria, Virginia 22313-1450
www.uspto.gov

APPLICATION NO.	FILING DATE	FIRST NAMED INVENTOR	ATTORNEY DOCKET NO.	CONFIRMATION NO.
10/390,982	03/17/2003	Jawahar Jain	073338.0122(02-52764 FLA)	5097

5073 7590 03/27/2009
BAKER BOTTS L.L.P.
2001 ROSS AVENUE
SUITE 600
DALLAS, TX 75201-2980

EXAMINER
NGUYEN, STEVE N

ART UNIT	PAPER NUMBER
2117	

NOTIFICATION DATE	DELIVERY MODE
03/27/2009	ELECTRONIC

Please find below and/or attached an Office communication concerning this application or proceeding.

The time period for reply, if any, is set in the attached communication.

Notice of the Office communication was sent electronically on above-indicated "Notification Date" to the following e-mail address(es):

ptomail1@bakerbotts.com
glenda.orrantia@bakerbotts.com

DECISION ON PETITION ROUTING SLIP

Application No.: 10390982

Art Unit: 2117

For Director's Secretary:

☑ **Granted** ☐ **Denied** ☐ **Dismissed**

- ☐ Decision to be reviewed and signed by Director
- ☑ Mail Decision & enter decision in Petition Database
- ☑ Forward a copy of the mailed decision to IFW for scanning
- ☑ Enter Paper Nos XXXXX and the decision in PALM
- ☑ Other

Instructions for TSS below:

For TECH Support Staff:

- ☐ Process and enter Paper Nos.
- ☐ Charge fee to D.A. No
- ☐ Other
- ☑ Forward file to

the Examiner for consideration of the Appeal Brief filed Feb. 23, 2009.

Quality Assurance Specialist No. 1:	Quality Assurance Specialist No. 2:	Quality Assurance Specialist No. 3:	Quality Assurance Specialist No. 4:
Vincent Trans WQAS 2160 RND-4B07 (571) 272-3613	Brian Johnson, WQAS 2110, RND 4A01 (571) 272-3595		Tod Swann

Quality Assurance Specialist No. 5:	Quality Assurance Specialist No. 6:	Quality Assurance Specialist No. 7:	Quality Assurance Specialist No. 8:
Gail Hayes	Kakali Chaki WQAS 2120, RND 5A05 (571)272-3719	Rehana Perveen, WQAS 2100, RND 3A75, (571)272-3676	Mano Padmanabhan WQAS 2180, RND 2A79 (571) 272-4210

UNITED STATES PATENT AND TRADEMARK OFFICE

COMMISSIONER FOR PATENTS
UNITED STATES PATENT AND TRADEMARK OFFICE
P.O. BOX 1450
ALEXANDRIA, VA 22313-1450
www.uspto.gov

Paper No. 5

GLENN PATENT GROUP
3475 EDISON WAY, SUITE L
MENLO PARK, CA 94025

COPY MAILED

SEP 02 2003

OFFICE OF PETITIONS

In re Application of
Lahiri et al.
Application No. 10/390,988
Filed: March 17, 2003
Attorney Docket No. NNEX0011
For: MINIATURIZED CONTACT SPRING

: DECISION GRANTING
: PETITION UNDER
: 37 CFR 1.47

This is in response to the petition under 37 CFR 1.47(a) filed July 21, 2003.

The petition is granted.

Petitioner has shown that the non-signing inventor has refused to join in the filing of the above-identified application after having been presented with the application papers

The above-identified application and papers have been reviewed and found in compliance with 37 CFR 1.47(a). This application is hereby accorded Rule 1.47(a) status.

As provided in Rule 1.47(c), this Office will forward notice of this application's filing to the non-signing inventor via his attorney's address given in the petition. Notice of the filing of this application will also be published in the Official Gazette.

After this decision is mailed, the above-identified application will be returned to the Office of Initial Patent Examination for further processing.

Telephone inquiries should be directed to Petitions Attorney Steven Brantley at (703) 306-5683.

Charles Steven Brantley
Petitions Attorney
Office of Petitions

UNITED STATES PATENT AND TRADEMARK OFFICE

COMMISSIONER FOR PATENTS
UNITED STATES PATENT AND TRADEMARK OFFICE
P.O. BOX 1450
ALEXANDRIA, VA 22313-1450
www.uspto.gov

Paper No. 6

Syamal Lahiri
c/o Jothan S. Stein
2600 El Camino Real, Suite 60
Palo Alto, CA 94306

COPY MAILED

SEP 02 2003

OFFICE OF PETITIONS

In re Application of	:
Lahiri et al.	: DECISION GRANTING
Application No. 10/390,988	: PETITION UNDER
Filed: March 17, 2003	: 37 CFR 1.47
Attorney Docket No. NNEX0011	:
For: MINIATURIZED CONTACT SPRING	:

Dear Mr. Lahiri:

You are named as a joint inventor in the above identified United States patent application, filed under the provisions of 35 U.S.C. 116 (United States Code), and 37 CFR 1.47(a), Rules of Practice in Patent Cases. Should a patent be granted on the application you will be designated therein as a joint inventor.

As a named inventor you are entitled to inspect any paper in the file wrapper of the application, order copies of all or any part thereof (at a prepaid cost per 37 CFR 1.19) or make your position of record in the application. Alternatively, you may arrange to do any of the preceding through a registered patent attorney or agent presenting written authorization from you. If you care to join the application, counsel of record (see below) would presumably assist you. Joining in the application would entail the filing of an appropriate oath or declaration by you pursuant to 37 CFR 1.63.

Requests for information regarding your application should be directed to the File Information Unit at (703)308-2733. Information regarding how to pay for and order a copy of the application, or a specific paper in the application, should be directed to Certification Division at (703)308-9726 or 1(800)972-6382 (outside the Washington D.C. area).

Telephone inquiries regarding this communication should be directed to Petitions Attorney Steven Brantley at (703) 306-5683.

Charles Steven Brantley
Petitions Attorney
Office of Petitions

cc: GLENN PATENT GROUP
3475 EDISON WAY, SUITE L
MENLO PARK, CA 94025

UNITED STATES PATENT AND TRADEMARK OFFICE

COMMISSIONER FOR PATENTS
UNITED STATES PATENT AND TRADEMARK OFFICE
P.O. BOX 1450
ALEXANDRIA, VA 22313-1450
www.uspto.gov

GLENN PATENT GROUP
3475 EDISON WAY, SUITE L
MENLO PARK, CA 94025

COPY MAILED

SEP 09 2004

OFFICE OF PETITIONS

In re Application of	:	
Syamal Kumar Lahiri et al.	:	
Application No. 10/390,994	:	DECISION GRANTING
Filed: March 17, 2003	:	STATUS UNDER 37 CFR 1.47(a)
Attorney Docket No. NNEX0011-2	:	

This is in response to the petition filed July 24, 2003, which refused to accord 37 CFR 1.47(a) status to the above-identified application.

The petition is granted.

Petitioner has shown that the non-signing inventor (Syamal Kumar Lahiri) has refused to join in the filing of the above-identified application.

The above-identified application and papers have been reviewed and found in compliance with CFR 1.47(a). This application is hereby accorded Rule 1.47(a) status. As provided in Rule 1.47(c), this office will forward notice of this application's filing to the non-signing inventor at the address given in the petition. Notice of the filing of this application will also be published in the Official Gazette.

Telephone inquiries related to this decision should be directed to Irvin Dingle at (703) 306-5684.[1]

Frances Hicks
Lead Petitions Examiner
Office of Petitions
Office of the Deputy Commissioner
for Patent Examination Policy

[1] Effective September 27, 2004, the phone number will be 571-272-3218.

UNITED STATES PATENT AND TRADEMARK OFFICE

Commissioner for Patents
United States Patent and Trademark Office
P.O. Box 1450
Alexandria, VA 22313-1450
www.uspto.gov

BIRCH STEWART KOLASCH & BIRCH
P.O. BOX 747
FALLS CHURCH VA 22040-0747

COPY MAILED

JAN 3 1 2006

OFFICE OF PETITIONS

ON PETITION

In re Application of	:
Yoshiaki Sasage et al	:
Application No. 10/391,008	:
Filed: March 19, 2003	:
Attorney Docket No. 0171-0950P	:

This is a decision on the petition, filed January 27, 2006, under 37 CFR 1.313(c)(2) to withdraw the above-identified application from issue after payment of the issue fee.

The petition is **GRANTED**.

The above-identified application is withdrawn from issue for consideration of a submission under 37 CFR 1.114 (request for continued examination). See 37 CFR 1.313(c)(2).

Petitioner is advised that the issue fee paid on April 14, 2005, in the above-identified application cannot be refunded. If, however, the above-identified application is again allowed, petitioner may request that it be applied towards the issue fee required by the new Notice of Allowance.[1]

Telephone inquiries should be directed to the undersigned at (571) 272-3208.

The examiner of Technology Center AU 1623 will consider the request for continued examination under 37 CFR 1.114.

Karen Creasy

Karen Creasy
Petitions Examiner
Office of Petitions
Office of the Deputy Commissioner
for Patent Examination Policy

---

[1] The request to apply the issue fee to the new Notice may be satisfied by completing and returning the new Issue Fee Transmittal Form PTOL-85(b), which includes the following language thereon: "Commissioner for Patents is requested to apply the Issue Fee and Publication Fee (if any) or re-apply any previously paid issue fee to the application identified above." Petitioner is advised that, whether a fee is indicated as being due or not, the Issue Fee Transmittal Form **must** be completed and timely submitted to avoid abandonment. Note the language in bold text on the first page of the Notice of Allowance and Fee(s) Due (PTOL-85).

UNITED STATES PATENT AND TRADEMARK OFFICE

Commissioner for Patents
United States Patent and Trademark Office
P.O. Box 1450
Alexandria, VA 22313-1450
www.uspto.gov

McDERMOTT WILL & EMERY
600 13TH STREET NW
WASHINGTON, DC 20005-3096

COPY MAILED

SEP 15 2004

OFFICE OF PETITIONS

In re Application of :
Takashi Kubo :
Application No. 10/391,021 : DECISION GRANTING PETITION
Filed: March 19, 2003 : UNDER 37 CFR 1.313(c)(2)
Attorney Docket No. 57454-918 :

This is a decision on the petition, filed September 8, 2004, under 37 CFR 1.313(c)(2) to withdraw the above-identified application from issue after payment of the issue fee.

The petition is **GRANTED**.

The above-identified application is withdrawn from issue for consideration of a submission under 37 CFR 1.114 (request for continued examination). See 37 CFR 1.313(c)(2).

Petitioner is advised that the issue fee paid on September 1, 2004 in the above-identified application cannot be refunded. If, however, the above-identified application is again allowed, petitioner may request that it be applied towards the issue fee required by the new Notice of Allowance.[1]

Telephone inquiries should be directed to the undersigned at (703) 305-8680.

This matter is being referred to Technology Center AU 2819 for processing of the request for continued examination under 37 CFR 1.114 and for consideration of the concurrently filed amendment.

Frances Hicks
Petitions Examiner
Office of Petitions
Office of the Deputy Commissioner
for Patent Examination Policy

---

[1] *The request to apply the issue fee to the new Notice may be satisfied by completing and returning the new Issue Fee Transmittal Form PTOL-85(b), which includes the following language thereon: "Commissioner for Patents is requested to apply the Issue Fee and Publication Fee (if any) or re-apply any previously paid issue fee to the application identified above." Petitioner is advised that, whether a fee is indicated as being due or not, the Issue Fee Transmittal Form* ***must*** *be completed and timely submitted to avoid abandonment. Note the language in bold text on the first page of the Notice of Allowance and Fee(s) Due (PTOL-85).*

UNITED STATES PATENT AND TRADEMARK OFFICE

Commissioner for Patents
United States Patent and Trademark Office
P.O. Box 1450
Alexandria, VA 22313-1450
www.uspto.gov

Orum & Roth LLC
53 W. Jackson Boulevard
Chicago IL 60604-3606

COPY MAILED

OCT 18 2006

OFFICE OF PETITIONS

In re Application of

PERRY, et al.
Application No. 10/391,036
Filed: March 18, 2003
Attorney Docket No. 13133

DECISION ON PETITION
TO WITHDRAW
FROM RECORD

This is a decision on the Request to Withdraw as attorney or agent under 37 C.F.R. § 1.36(b) or 37 C.F.R. § 10.40 filed July 16, 2006.

The request is **APPROVED**.

A review of the file record indicates that Catherine L. Gemrich: (1) does not have power of attorney in this patent application; and (2) has been employed or otherwise engaged in the proceedings in this patent application. In view of the present decision, Catherine L. Gemrich has been withdrawn from the present application and may not prepare or submit papers under 37 C.F.R. § 1.34, or correspond in any manner in this application unless appointed in an acceptable power of attorney under 37 C.F.R. § 1.32(b).

Applicant is reminded that there is no attorney of record at this time.

The correspondence address remains unchanged.

A Review of the file discloses that a non-final Office action was mailed on May 21, 2006, which set forth a three month shortened statutory period for reply. Extensions of time under 37 CFR 1.136(a) were available. To date, there is no indication that a reply to the Office action of May 21, 2006 has been received.

Telephone inquires concerning this decision should be directed to Patricia Volpe at 571-272-6825.

David Bucci
Petitions Examiner
Office of Petitions

cc: Karen Perry
2221 Feldman Avenue
Cincinnati, OH 45212

cc: Catherine Gemrich
Steelcase Development Corporation
6100 East Paris Avenue
Caledonia, MI 49501

UNITED STATES PATENT AND TRADEMARK OFFICE

Commissioner for Patents
United States Patent and Trademark Office
P.O. Box 1450
Alexandria, VA 22313-1450
www.uspto.gov

SCULLY SCOTT MURPHY & PRESSER, PC
400 GARDEN CITY PLAZA, SUITE 300
GARDEN CITY, NY 11530

COPY MAILED

JUN 20 2005

OFFICE OF PETITIONS

In re Application of	:	
Robert K. Barr et al	:	
Application No. 10/391,051	:	ON PETITION
Filed: March 18, 2003	:	
Attorney Docket No. 51888	:	

This is a decision on the petition under 37 CFR 1.137(b), filed May 16, 2005, to revive the above-identified application.

The petition is **GRANTED**.

The above-identified application became abandoned for failure to reply in a timely manner to the non-final Office action mailed October 5, 2004, which set a shortened statutory period for reply of three (3) months. No extension of time under the provisions of 37 CFR 1.136(a) were obtained. Accordingly, the above-identified application became abandoned on January 6, 2005.

Telephone inquiries concerning this decision should be directed to Irvin Dingle at (571) 272-3210.

This matter is being referred to Technology Center AU 1752 for further processing.

Irvin Dingle
Petitions Examiner
Office of Petitions
Office of the Deputy Commissioner
for Patent Examination Policy

UNITED STATES PATENT AND TRADEMARK OFFICE

Commissioner for Patents
United States Patent and Trademark Office
P.O. Box 1450
Alexandria, VA 22313-1450
www.uspto.gov

KOS PHARMACEUTICALS, INC.
1 CEDAR BROOK DRIVE
CRANBURY NJ 08512-3618

COPY MAILED
MAY 0 1 2006
OFFICE OF PETITIONS

In re Application of :
Akwete L. Adjei et al. :
Application No. 10/391,053 : ON PETITION
Filed: March 18, 2003 :
Attorney Docket Number: **100591-7107.1** :

This is a decision on the petition filed January 18, 2006 under 37 CFR 1.137(b),[1] to revive the above-identified application.

The petition under 37 CFR 1.137 (b) is **GRANTED**.

This application became abandoned January 9, 2006 for failure to timely pay the issue fee on or before January 6, 2006. The instant petition and this decision precede the mailing of the Notice of Abandonment.

The issue fee, publication fee and petition fee have been applied. All other requirements of 37 CFR 1.137(b) having now been met, this application file is being forwarded to the Publishing Division to be processed into a patent.

Telephone inquiries concerning this matter may be directed to the undersigned Petitions Attorney at (571) 272-3212.

Patricia Faison-Ball
Senior Petitions Attorney
Office of Petitions

---

[1] Effective December 1, 1997, the provisions of 37 CFR 1.137(b) now provide that where the delay in reply was unintentional, a petition may be filed to revive an abandoned application or a lapsed patent pursuant to 37 CFR 1.137(b). A grantable petition filed under the provisions of 37 CFR 1.137(b) must be accompanied by:

(1) the required reply, unless previously filed. In a nonprovisional application abandoned for failure to prosecute, the required reply may be met by the filing of a continuing application. In a nonprovisional application filed on or after June 8, 1995, and abandoned for failure to prosecute, the required reply may also be met by the filing of a request for continued examination in compliance with § 1.114. In an application or patent, abandoned or lapsed for failure to pay the issue fee or any portion thereof, the required reply must be the payment of the issue fee or any outstanding balance thereof.

(2) the petition fee as set forth in 37 CFR 1.17(m);

(3) a statement that the entire delay in filing the required reply from the due date for the reply until the filing of a grantable petition pursuant to 37 CFR 1.137(b) was unintentional. The Commissioner may required additional information where there is a question whether the delay was unintentional; and

(4) any terminal disclaimer (and fee as set forth in 37 CFR 1.20(d)) required pursuant to 37 CFR 1.137(c)).

UNITED STATES PATENT AND TRADEMARK OFFICE

Commissioner for Patents
United States Patent and Trademark Office
P.O. Box 1450
Alexandria, VA 22313-1450
www.uspto.gov

SIERRA PATENT GROUP
P O BOX 6149
STATELINE, NV 89449

COPY MAILED

NOV 3 0 2005

OFFICE OF PETITIONS

ON PETITION

In re Application of :
Klaus Kern et al :
Application No. 10/391,066 :
Filed: March 17, 2003 :
Attorney Docket No. MAN-006 :

This is a decision on the petition under 37 CFR 1.137(b), filed November 3, 2005, to revive the above-identified application.

The petition is **GRANTED**.

The above-identified application became abandoned for failure to submit the issue/publication fees in a timely manner in reply to the Notice of Allowance mailed July 1, 2005, which set a statutory period for reply of three (3) months. Accordingly, the above-identified application became abandoned on October 4, 2005.

The petition satisfies the conditions for revival pursuant to the provisions of 37 CFR 1.137(b) in that (1) the reply in the form of the issue/publication fees; (2) the petition fee; and (3) the required statement of unintentional delay have been received. Accordingly, the issue/publication fees are accepted as having been unintentional delayed.

The statement of unintentional delay presented in the petition does not comply with the current rule. Effective December 1, 1997, 37 C.F.R. §1.137 (b)(3) requires a statement that "the entire delay in filing the required reply from the due date for the reply until the filing of a grantable petition pursuant to 37 C.F.R. §1.137(b) was unintentional" be submitted. However, the statement presented will be accepted and construed as meaning that "the entire delay in filing the required reply from the due date for the reply until the filing of a grantable petition pursuant to 37 C.F.R. §1.137(b) was unintentional." If this is an incorrect interpretation in view of the rules, petitioner is required to provide a statement to that effect.

Telephone inquiries concerning this decision should be directed to Wan Laymon at (571) 272-3220.

This matter is being referred to Publishing Division.

Wan Laymon

Wan Laymon
Petitions Examiner
Office of Petitions

UNITED STATES PATENT AND TRADEMARK OFFICE

Commissioner for Patents
United States Patent and Trademark Office
P.O. Box 1450
Alexandria, VA 22313-1450
www.uspto.gov

MAILED
FROM DIRECTORS OFFICE

MAY 05 2005

TECHNOLOGY CENTER 3600

MERCHANT & GOULD PC
P.O. Box 2903
Minneapolis, MN 55402-0903

In re Application of
Richard Beaudoin et al
Application No. 10/391,102
Filed: March 17, 2003
For: CHAIN KEEPER AND METHOD OF RETAINING A CHAIN

DECISION ON PETITION TO WITHDRAW THE HOLDING OF ABANDONMENT

This is in reply to the status inquiry of March 15, 2005. The inquiry is being handled as a petition to withdraw the holding of abandonment under 37 CFR 1.181.

The petition is **GRANTED** in view of the following evidence of timely filing :

☐ Postcard receipt being dated _____.

☐ USPTO return facsimile receipt dated _____ which identifies the application by serial number and the type of Response that was filed on that date.

☐ Certificate of Mailing/Transmission signed on _____ and supported by a statement under 37 C.F.R. 1.8(b)(3).

☐ Hand Delivery Receipt of the specific documents submitted dated _____.

☐ Certificate of Transmission of CPA under 37 C.F.R. 1.6 filed on _____.

☐ Express Mail Receipt under 37 C.F.R. 1.10 dated _____.

☒ Originally sent response, filed December 7, 2004, with a PTO date receipt of December 7, 2004 has been found in the application.

The application is being forwarded to the legal instruments examiner to update the status of the application as pending and forward the applicant's response of December 7, 2004 to the examiner for prompt action.

KJD/jwk: 4/20/05

KENNETH J. DORNER
SPECIAL PROGRAMS EXAMINER
TECHNOLOGY CENTER 3600

UNITED STATES PATENT AND TRADEMARK OFFICE

Commissioner for Patents
United States Patent and Trademark Office
P.O. Box 1450
Alexandria, VA 22313-1450
www.uspto.gov

CUMMINS-ALLISON CORP.
C/O JENKENS & GILCHRIST
225 WEST WASHINGTON STREET
SUITE 2600
CHICAGO, IL 60606

COPY MAILED

AUG 3 1 2006

OFFICE OF PETITIONS

In re Application of	:
Donald E. Raterman et al	:
Application No. 10/391,111	: DECISION GRANTING PETITION
Filed: March 18, 2003	: UNDER 37 CFR 1.313(c)(2)
Attorney Docket No. 47171-00087USC2	:

This is a decision on the petition, filed August 30, 2006, under 37 CFR 1.313(c)(2) to withdraw the above-identified application from issue after payment of the issue fee.

The petition is **GRANTED**.

The above-identified application is withdrawn from issue for consideration of a submission under 37 CFR 1.114 (request for continued examination). See 37 CFR 1.313(c)(2).

Petitioner is advised that the issue fee paid on April 24, 2006 in the above-identified application cannot be refunded. If, however, the above-identified application is again allowed, petitioner may request that it be applied towards the issue fee required by the new Notice of Allowance.[1]

Telephone inquiries should be directed to the undersigned at (571) 272-3218.

This matter is being referred to Technology Center AU 2624 for processing of the request for continued examination under 37 CFR 1.114 and for consideration of the concurrently filed amendment.

Frances Hicks
Petitions Examiner
Office of Petitions

C:\Documents and Settings\FHicks\My Documents\470\Aug9\391111.wpd

---

[1] *The request to apply the issue fee to the new Notice may be satisfied by completing and returning the new Part B – Fee(s) Transmittal Form (along with any balance due at the time of submission). Petitioner is advised that the Issue Fee Transmittal Form must be completed and timely submitted to avoid abandonment.*

SPE RESPONSE FOR CERTIFICATE OF CORRECTION

DATE : 8-12-08 Paper No.: _____

TO SPE OF : ART UNIT 2624

SUBJECT : Request for Certificate of Correction for Appl. No. 10/391,111 Patent No.: 7248731

Please respond to this request for a certificate of correction within 7 days.

FOR IFW FILES:

Please review the requested changes/corrections as shown in the **COCIN** document(s) in the IFW application image. No new-matter should be introduced, nor should the scope or meaning of the claims be changed.

Should CofC be approved

Please complete the response (see below) and forward the completed response to scanning using document code **COCX**.

FOR PAPER FILES:

Please review the requested changes/corrections as shown in the attached certificate of correction. Please complete this form (see below) and forward it with the file to:

Certificates of Correction Branch (CofC)
South Tower - 9A22
Palm Location 7580

Ennis Young
Certificates of Correction Branch
703-308-9390 ext. 117

Thank You For Your Assistance

The request for issuing the above-identified correction(s) is hereby:
Note your decision on the appropriate box.

- ☑ **Approved** — All changes apply.
- ☐ **Approved in Part** — Specify below which changes do not apply.
- ☐ **Denied** — State the reasons for denial below.

Comments: _____

Mark Bell
SPE

2624
Art Unit

PTOL-306 (REV. 7/03) U.S. DEPARTMENT OF COMMERCE Patent and Trademark Office

UNITED STATES PATENT AND TRADEMARK OFFICE

UNITED STATES DEPARTMENT OF COMMERCE
United States Patent and Trademark Office
Address: COMMISSIONER FOR PATENTS
P.O. Box 1450
Alexandria, Virginia 22313-1450
www.uspto.gov

APPLICATION NO.	FILING DATE	FIRST NAMED INVENTOR	ATTORNEY DOCKET NO.	CONFIRMATION NO.
10/391,130	03/18/2003	Amy L. Bench	85570F-P	4281

7590 11/22/2005

Milton S. Sales
Patent Legal Staff
Eastman Kodak Company
343 State Street
Rochester, NY 14650-2201

EXAMINER
FRECH, KARL D

ART UNIT	PAPER NUMBER
2876	

DATE MAILED: 11/22/2005

Please find below and/or attached an Office communication concerning this application or proceeding.

SPE RESPONSE FOR CERTIFICATE OF CORRECTION

Paper No.:111505

DATE : November 15, 2005

TO SPE OF : ART UNIT 2876

SUBJECT : Request for Certificate of Correction on Patent No.: 6,908,035

A response is requested with respect to the accompanying request for a certificate of correction.

Please complete this form and return with file, within **7** days to:
Certificates of Correction Branch - PK 3-910
Palm location **7590** - Tel. No. 305-8201

With respect to the change(s) requested, correcting Office and/or Applicant's errors, should the patent read as shown in the certificate of correction? No new matter should be introduced, nor should the scope or meaning of the claims be changed.

Thank You For Your Assistance **Certificates of Correction Branch**

The request for issuing the above-identified correction(s) is hereby:
Note your decision on the appropriate box.

☒ **Approved** **All** changes apply.

☐ **Approved in Part** Specify below which changes **do not** apply.

☐ **Denied** State the reasons for denial below.

Comments:

Correction of typographical errors APPROVED.

KARL D. FRECH
PRIMARY EXAMINER

SPE: Michael G. Lee

Art Unit 2876

SPE RESPONSE FOR CERTIFICATE OF CORRECTION

Paper No.: _____

DATE : 07/26/07

TO SPE OF : ART UNIT 3737

SUBJECT : Request for Certificate of Correction for Appl. No.: **10/391131** Patent No.: **6855113**

Please respond to this request for a certificate of correction within 7 days.

Please review the requested changes/corrections as shown in the **COCIN** document(s) in the IFW application image. No new matter should be introduced, nor should the scope or meaning of the claims be changed.

Please complete the response (see below) and forward the completed response to scanning using document code **COCX**.

Angela Green
Certificates of Correction Branch
703.308.9380 ext. 173

Thank You For Your Assistance

The request for issuing the above-identified correction(s) is hereby:
Note your decision on the appropriate box.

- ☑ **Approved** — **All** changes apply.
- ☐ **Approved in Part** — Specify below which changes **do not** apply.
- ☐ **Denied** — State the reasons for denial below.

Comments: Corrections approved.

_____ **SPE** _____ **Art Unit**

UNITED STATES PATENT AND TRADEMARK OFFICE

Commissioner for Patents
United States Patent and Trademark Office
P.O. Box 1450
Alexandria, VA 22313-1450
www.uspto.gov

E I DU PONT DE NEMOURS AND COMPANY
LEGAL PATENT RECORDS CENTER
BARLEY MILL PLAZA 25/1128
4417 LANCASTER PIKE
WILMINGTON DE 19805

COPY MAILED

APR 18 2006

OFFICE OF PETITIONS

In re Application of	:	
Loper et al.	:	
Application No. 10/391,133	:	ON PETITION
Filed: March 18, 2003	:	
Attorney Docket No. FA1082 USNA	:	

This is a decision on the petition under 37 C.F.R. § 1.137(b), filed March 24, 2006, to revive the above-identified application.

The petition is **GRANTED.**

The petition satisfies the conditions for revival pursuant to the provisions of 37 CFR 1.137(b) in that (1) the reply in the form of an Amendment; (2) the petition fee; and (3) the required statement of unintentional delay have been received. Accordingly, the response has been accepted as having been unintentionally delayed.

This matter is being referred to Technology Center 1700 for further examination on the merits.

Telephone inquiries regarding this decision should be directed to the undersigned at (571) 272-3282.

Liana Chase
Petitions Examiner
Office of Petitions

UNITED STATES PATENT AND TRADEMARK OFFICE

Commissioner for Patents
United States Patent and Trademark Office
P.O. Box 1450
Alexandria, VA 22313-1450
www.uspto.gov

Paper No. 9

WORKMAN NYDEGGER (F/K/A WORKMAN NYDEGGER & SEELEY)
60 EAST SOUTH TEMPLE
1000 EAGLE GATE TOWER
SALT LAKE CITY, UT 84111

COPY MAILED

JUN 3 0 2004

OFFICE OF PETITIONS

In re Application of	:	
Togami et al.	:	
Application No. 10/391,140	:	ON PETITION
Filed: March 17, 2003	:	
Attorney Docket No. 15436.250.35	:	

This is a decision on the petition under 37 C.F.R. § 1.137(b), filed June 16, 2004, to revive the above-identified application.

The petition is **DISMISSED**.

Any request for reconsideration must be submitted within TWO (2) MONTHS from the mail date of this decision. No further petition fee is required for the request. Extensions of time under 37 CFR 1.136(a) are permitted. The reconsideration request should include a cover letter entitled "Renewed Petition under 37 CFR 1.137(b)." This is **not** a final agency action within the meaning of 5 U.S.C. § 704.

The above-identified application became abandoned for failure to reply in a timely manner to the Notice to File Missing Parts of Application (Notice) mailed May 29, 2003. The Notice set a period for reply of two (2) months from the mail date of the Notice. No extensions of time under the provisions of 37 CFR 1.136(a) were timely obtained. Accordingly, the above-identified application became abandoned on July 30, 2003. A Notice of Abandonment was mailed on February 13, 2004.

A grantable petition under 37 CFR 1.137(b) must be accompanied by:
(1) the required reply,[1]
(2) the petition fee,
(3) a statement that the entire delay in filing the required reply from the due date for the reply until the filing of a grantable petition pursuant to 37 CFR 1.137(b) was unintentional, and
(4) a terminal disclaimer and fee if the application was filed on or before June 8, 1995 or if the application is a design application.

Where there is a question as to whether either the abandonment or the delay in filing a petition under 37 CFR 1.137 was unintentional, the Commissioner may require additional information.[2]

---

[1] In a nonprovisional application abandoned for failure to prosecute, the required reply may be met by the filing of a continuing application. In an application or patent, abandoned or lapsed for failure to pay the issue fee or any portion thereof, the required reply must be the payment of the issue fee or any outstanding balance thereof.

The instant petition lacks items (1). The Office acknowledges receipt of the declaration and requisite late surcharge. However, petitioner stated that the Drawings required by the Notice were included with the instant petition submitted on June 16, 2004. After a review of the application file and all the submitted documents, the drawings could not be located. Accordingly, petitioner must resubmit the drawings to revive the above-identified application.

An extension of time under 37 CFR 1.136 must be filed prior to the expiration of the maximum extendable period for reply. See In re Application of S., 8 USPQ2d 1630, 1631 (Comm'r Pats. 1988). Accordingly, since the $2010.00 extension of time fee submitted with the petition on June 16, 2004 was subsequent to the maximum extendable period for reply, this fee is unnecessary and will be credited to petitioner's credit card.

Further correspondence with respect to this matter should be addressed as follows:

By mail: Mail Stop PETITION
Commissioner for Patents
Post Office Box 1450
Alexandria, VA 22313-1450

Effective December 1, 2003, the Office of Petitions can no longer receive hand-carried correspondence, or facsimile transmissions of correspondence. The centralized location for hand-carried correspondence is the existing Customer Window located at:

2011 South Clark Place
Crystal Plaza 1 Lobby
Room 1B03
Arlington, VA 22202

The centralized facsimile number is **(703) 872-9306.**

Telephone inquiries should be directed to the undersigned at (703) 306-0482.

Liana Chase
Petitions Examiner
Office of Petitions
Office of the Deputy Commissioner
for Patent Examination Policy

---

[2] See MPEP 711.03(c)(III)(C) and (D).

UNITED STATES PATENT AND TRADEMARK OFFICE

Commissioner for Patents
United States Patent and Trademark Office
P.O. Box 1450
Alexandria, VA 22313-1450
www.uspto.go

WORKMAN NYDEGGER (F/K/A WORKMAN NYDEGGER & SEELEY)
60 EAST SOUTH TEMPLE
1000 EAGLE GATE TOWER
SALT LAKE CITY, UT 84111

COPY MAILED

SEP 0 9 2004

OFFICE OF PETITIONS

In re Application of	:	
Togami et al.	:	
Application No. 10/391,140	:	ON PETITION
Filed: March 17, 2003	:	
Attorney Docket No. 15436.250.35	:	

This is a decision on the renewed petition under 37 C.F.R. § 1.137(b), filed August 19, 2004, to revive the above-identified application.

The petition is **GRANTED.**

The above-identified application became abandoned for failure to reply in a timely manner to the Notice to File Missing Parts of Application (Notice) mailed May 29, 2003. The Notice set a period for reply of two (2) months from the mail date of the Notice. No extensions of time under the provisions of 37 CFR 1.136(a) were timely obtained. Accordingly, the above-identified application became abandoned on July 30, 2003.

Petitioner has met the requirements to revive the above-identified application pursuant to 37 CFR 1.137(b).

A renewed petition under 37 C.F.R. § 1.137(b) does not require a reconsideration fee. Accordingly, the $130.00 submitted with the instant petition is unnecessary and will be credited to petitioner's deposit account as authorized.

This matter is now being forwarded to the Office of Initial Patent Examination for further processing.

Telephone inquiries should be directed to the undersigned at (703) 306-0482. Any telephone inquiries after September 28, 2004 should be directed to the undersigned at (571) 272-3282.

Liana Chase
Petitions Examiner
Office of Petitions
Office of the Deputy Commissioner
for Patent Examination Policy

UNITED STATES PATENT AND TRADEMARK OFFICE

Commissioner for Patents
United States Patent and Trademark Office
P.O. Box 1450
Alexandria, VA 22313-1450
www.uspto.gov

Paper No.

COPY MAILED

JUN 19 2008

OFFICE OF PETITIONS

HOLLAND & HART, LLP
P.O BOX 8749
DENVER CO 80201

In re Application of Thomas E. McGee Application No. 10/391,172 Filed: March 17, 2003 Attorney Docket No.: 51572.0029 Title: ENDOTRACHEAL SURFACTANT DISTRIBUTION SYSTEM	DECISION ON PETITION PURSUANT TO 37 C.F.R. § 1.181

This is a decision on the petition filed April 23, 2007, pursuant to 37 C.F.R. § 1.181, requesting that the holding of abandonment in the above-identified application be withdrawn.

The above-identified application became abandoned for failure to submit the issue and publication fees in a timely manner in reply to the Notice of Allowance and Issue Fee Due, mailed October 3, 2006, which set a shortened statutory period for reply of three months. No extensions of time are permitted for transmitting issue or publication fees[1]. Accordingly, the above-identified application became abandoned on January 4, 2007. A Notice of Abandonment was mailed on January 29, 2007.

The electronic file has been reviewed, and it is clear that a "REVOCATION AND SUBSTITUTE POWER OF ATTORNEY" was received on March 7, 2005, however it does not appear that this request was entered in a timely manner. As such, it is clear that the Notice of Allowance and Issue Fee Due was mailed to the wrong address.

The petition pursuant to 37 C.F.R. § 1.181 is **GRANTED**.

1 See MPEP § 710.02(e).

The "REVOCATION AND SUBSTITUTE POWER OF ATTORNEY" has been entered and made of record.

The Technology Center will be notified of this decision. The Technology Center's support staff will re-mail the Notice of Allowance and Issue Fee Due of October 3, 2006, and will set a new period for response.

Petitioner may find it beneficial to view Private PAIR within a fortnight of the present decision to ensure that the withdrawal of the holding of abandonment has been acknowledged by the Technology Center in response to this decision. It is noted that all inquiries with regard to any failure of that change in status should be directed to the Technology Center where that change of status must be effected - **the Office of Petitions cannot effectuate a change of status.**

Telephone inquiries regarding *this decision* should be directed to the undersigned at (571) 272-3225[2]. All other inquiries concerning examination procedures or status of the application should be directed to the Technology Center.

/Paul Shanoski/
Paul Shanoski
Senior Attorney
Office of Petitions

---

2 Petitioner will note that all practice before the Office should be in writing, and the action of the Office will be based exclusively on the written record in the Office. See 37 C.F.R. § 1.2. As such, Petitioner is reminded that no telephone discussion may be controlling or considered authority for any of Petitioner's further action(s).

UNITED STATES PATENT AND TRADEMARK OFFICE

UNITED STATES DEPARTMENT OF COMMERCE
United States Patent and Trademark Office
Address: COMMISSIONER FOR PATENTS
P.O. Box 1450
Alexandria, Virginia 22313-1450
www.uspto.gov

APPLICATION NUMBER	FILING OR 371(C) DATE	FIRST NAMED APPLICANT	ATTY. DOCKET NO./TITLE
10/391,172	03/17/2003	Thomas E. McGee	2020-4411.1US

CONFIRMATION NO. 4885

POWER OF ATTORNEY NOTICE

24247
TRASK BRITT
P.O. BOX 2550
SALT LAKE CITY, UT 84110

OC000000030500679

Date Mailed: 06/16/2008

NOTICE REGARDING CHANGE OF POWER OF ATTORNEY

This is in response to the Power of Attorney filed 03/07/2005.

- The Power of Attorney to you in this application has been revoked by the assignee who has intervened as provided by 37 CFR 3.71. Future correspondence will be mailed to the new address of record(37 CFR 1.33).

/pashanoski/

Office of Data Management, Application Assistance Unit (571) 272-4000, or (571) 272-4200, or 1-888-786-0101

UNITED STATES PATENT AND TRADEMARK OFFICE

UNITED STATES DEPARTMENT OF COMMERCE
United States Patent and Trademark Office
Address: COMMISSIONER FOR PATENTS
P.O. Box 1450
Alexandria, Virginia 22313-1450
www.uspto.gov

APPLICATION NUMBER	FILING OR 371(C) DATE	FIRST NAMED APPLICANT	ATTY. DOCKET NO./TITLE
10/391,172	03/17/2003	Thomas E. McGee	2020-4411.1US

CONFIRMATION NO. 4885

POA ACCEPTANCE LETTER

26582
HOLLAND & HART, LLP
P.O BOX 8749
DENVER, CO 80201

OC000000030500723

Date Mailed: 06/16/2008

NOTICE OF ACCEPTANCE OF POWER OF ATTORNEY

This is in response to the Power of Attorney filed 03/07/2005.

The Power of Attorney in this application is accepted. Correspondence in this application will be mailed to the above address as provided by 37 CFR 1.33.

/pashanoski/

Office of Data Management, Application Assistance Unit (571) 272-4000, or (571) 272-4200, or 1-888-786-0101

UNITED STATES PATENT AND TRADEMARK OFFICE

Commissioner for Patents
United States Patent and Trademark Office
P.O. Box 1450
Alexandria, VA 22313-1450
www.uspto.gov

Robert Charles Hill
235 Montgomery Street # 821
San Francisco CA 94104

COPY MAILED

MAY 1 4 2004

OFFICE OF PETITIONS

In re Application of
Denny George Constantine
Application No. 10/391,177
Filed: March 18, 2003
Attorney Docket No. 8533A

: DECISION GRANTING PETITION

This is a decision on the petition filed May 28, 2003, under 37 CFR 1.53, requesting that the above-identified application be accorded a filing date of March 18, 2003, with two (2) sheets of drawings as a part of the original disclosure.

The petition is **GRANTED**.

The application was filed on March 18, 2003. However, on May 14, 2003, the Office of Initial Patent Examination mailed a "Notice Of Incomplete Nonprovisional Application" stating that the application had not been accorded a filing date because the application had been deposited without drawings as required by 35 U.S.C. § 113.

In response, on May 28, 2003, the present petition was filed, accompanied by, *inter alia*, two (2) sheets of drawings. Petitioners assert that the above-identified application is a continuation-in-part of Application No. 09/779,771 filed February 8, 2001.

A search of the official file reveals that on March 18, 2003, a specification was filed which states on the first page that "this application is a continuation-in-part of United States Patent Application, Serial No. 09/779,771 filed February 8, 2001. Such application is herein incorporated by reference."

Based on petitioners' representation that the papers supplied with the petition constitute a copy of the prior application, and the incorporation by reference statement appearing on the first page of the specification deposited on March 18, 2003, stating that the application is a continuation-in-part of Application No. 09/779,771 herein incorporated by referenced, it appears that the specification was present in the Office on March 18, 2003, albeit in the file of another application, *i.e.*, Application No. 09/779,771. Therefore, on petition, the application may be accorded the requested filing date.

The application will be processed and examined with the two (2) sheets of drawings

The application will be processed and examined with the two (2) sheets of drawings supplied on May 28, 2003, as a part of the original disclosure. The copies of the other application papers supplied on May 28, 2003 will not be used for processing or examination, but will be retained in the application file.

The petition filed May 28, 2003 is granted. Since the petition was required to accord the requested filing date, a petition fee in the amount of $130.00 is required. A review of the finance records reveals that $130.00 was submitted with the petition filed May 28, 2003. That fee, it appears, was inappropriately charged as a late surcharge and since late surcharge for a small entity is $65.00, a refund was issued to petitioner in the amount of $65.00. The fee codes will be corrected to reflect a payment in the amount of $65.00 paid towards the petition fee on May 28, 2003. The balance of the petition fee in the amount of $65 has also been received on May 12, 2004 and properly applied.

Of course, the primary examiner is expected to compare the drawings supplied on May 28, 2003, to the disclosure of prior application No. 09/779,771 in order to verify that the drawings are, in fact, part of the disclosure of the prior application.

The application is being forwarded to the Office of Initial Patent Examination for correction of the filing date to March 18, 2003, using the application papers filed on March 18, 2003, and the copy of two (2) sheets of drawings, supplied on May 28, 2003, as the original disclosure, and for an indication in Office records that two (2) sheets of drawings were present on filing.

Telephone inquiries concerning this matter may be directed to the undersigned Petitions Attorney at (703)305-4497.

Patricia Faison-Ball

Patricia Faison-Ball
Senior Petitions Attorney
Office of Petitions

Adjustment date: 05/17/2004 CKHLOK
07/16/2003 MNGUYEN 00000001 10391177
01 FC:2051 -65.00 OP

Adjustment date: 05/17/2004 CKHLOK
05/12/2004 AKELLEY 00000027 10391177
01 FC:1999 -65.00 OP

05/17/2004 CKHLOK 00000014 10391177

01 FC:1460 130.00 OP

SPE RESPONSE FOR CERTIFICATE OF CORRECTION

Paper No.: _____

DATE : February 27, 2007

TO SPE OF : ART UNIT 1621

SUBJECT : Request for Certificate of Correction for Appl. No. 10/391228 patent No.: 6887901

Please respond to this request for a certificate of correction within 7 days.

Please review the requested changes/corrections as shown in the **COCIN** document(s) in the IFW application image. No new matter should be introduced, nor should the scope or meaning of the claims be changed.

Please complete the response (see below) and forward the completed response to scanning using document code **COCX**.

Magdalene Talley

Certificates of Correction Branch

703-308-9390 ext. 116

Thank You For Your Assistance

The request for issuing the above-identified correction(s) is hereby:

Note your decision on the appropriate box.

- ☑ **Approved** — **All** changes apply.
- ☐ **Approved in Part** — Specify below which changes **do not** apply.
- ☐ **Denied** — State the reasons for denial below.

Comments: _____

JOHANN RICHTER
SUPERVISORY PATENT EXAMINER
GROUP 1200

SPE **Art Unit** 1621

PTOL-306 (REV. 7/03)

U.S. DEPARTMENT OF COMMERCE Patent and Trademark Office

Docket:**7212/US/2**

IN THE UNITED STATES PATENT AND TRADEMARK OFFICE

First Named Inventor:	Charles N. Serhan		
Patent No.:	6,887,901		
Issued:	May 3, 2005	Examiner:	Deborah Carr
Title:	Lipoxin Compounds and Their Use in Treating Cell Proliferative Disorders	Group Art Unit:	1621

REQUEST FOR CERTIFICATE OF CORRECTION (UNDER 37 CFR 1.322)

Commissioner for Patents
P. O. Box 1450
Alexandria, VA 22313-1450

Dear Sir:

A Certificate of Correction under 35 U.S.C. § 254 is hereby requested for the above-identified patent to correct errors made during the Prosecution of the Application. As the errors were made by the Applicant, this Request is filed under 37 CFR 1.322 with a fee. PTO Form-1050 is attached in duplicate, showing the requested changes. Favorable consideration of this Request is respectfully requested. The Commissioner is hereby authorized to charge the necessary fee to Deposit Account 04-1420.

Respectfully submitted,

DORSEY & WHITNEY LLP
Customer Number 25763

Date: October 30, 2006

By: Scott D. Rothenberger
Scott D. Rothenberger, Reg. No. 41,277
(612) 340-8819

Docket No. 7212/US/2

UNITED STATES PATENT AND TRADEMARK OFFICE

CERTIFICATE OF CORRECTION

PATENT NO. : 6,887,901
DATE : May 3, 2005
INVENTORS : Charles N. Serhan

It is hereby certified that error appears in the above-identified patent and that said Letters Patent are hereby corrected as shown below:

Title page, Item (63), before " of application No. " delete " division "and insert -- continuation --.

Col	Line	PTO	Should Read
1	12	"divisional"	-- continuation --

Customer Number 25763
MAILING ADDRESS OF SENDER:

PATENT NO.: **6,887,901**

DORSEY & WHITNEY LLP
Intellectual Property Department
Suite 1500
50 South Sixth Street
Minneapolis, MN 55402-1498

Docket No. 7212/US/2

UNITED STATES PATENT AND TRADEMARK OFFICE

CERTIFICATE OF CORRECTION

PATENT NO. : 6,887,901
DATE : May 3, 2005
INVENTORS : Charles N. Serhan

It is hereby certified that error appears in the above-identified patent and that said Letters Patent are hereby corrected as shown below:

Title page, Item (63), before " of application No. " delete " division "and insert -- continuation --.

Col	Line	PTO	Should Read
1	12	"divisional"	-- continuation --

Customer Number 25763
MAILING ADDRESS OF SENDER:

PATENT NO.: **6,887,901**

DORSEY & WHITNEY LLP
Intellectual Property Department
Suite 1500
50 South Sixth Street
Minneapolis, MN 55402-1498

UNITED STATES PATENT AND TRADEMARK OFFICE

COMMISSIONER FOR PATENT
UNITED STATES PATENT AND TRADEMARK OFFIC
WASHINGTON, D.C. 20231
www.uspto.go

Paper No. 081803

Joseph E. Tessari, Esquire
Tyco Technology Resources
4550 New Linden Hill Road, Suite 140
Wilmington, DE 19808-2952

AUG 20 2003

In re Application of:	:	
BRINDLE *et al.*	:	DECISION ON PETITION
Application No. 10/391,259	:	TO MAKE SPECIAL
Filed: March 18, 2003	:	
Attorney Docket No. 17942	:	

This is a decision on the petition under 37 C.F.R. § 1.102, filed March 18, 2003, to make the above-identified application special.

The petition is being treated as a request that the above-identified application be made special under the accelerated examination procedure set forth in the Manual of Patent Examining Procedure (M.P.E.P.), Section 708.02, Item VIII: Accelerated Examination.

A grantable petition to make special under 37 C.F.R. § 1.102 and in accordance with M.P.E.P., Section 708.02, Item VIII, must be accompanied by (a) the fee set forth in 37 C.F.R. § 1.17(h), (b) a statement that all claims are directed a single invention or an offer to make an oral election without traverse should the Patent and Trademark Office hold that the claims are not directed to a single invention, (c) a statement that a pre-examination search has been made by the inventor, attorney, agent, professional searcher, etc., and a listing of the field of search by class and subclass, (d) one copy of each of the references deemed most closely related to the subject matter encompassed by the claims, and (e) a detailed description of the submitted references and discussions pointing out how the claimed subject matter is distinguishable over these references.

The petition satisfies the above requirements. Accordingly, the petition is **GRANTED**.

If the examiner can make this application special without prejudice to any possible interfering applications, and he/she should make a rigid search for such, he/she is authorized to do so for the next action. Should the application be rejected, the application will not be considered special for the subsequent action unless the applicant promptly makes a bona fide effort to place the application in condition for allowance, even if it is necessary to have an interview with the examiner to accomplish this purpose.

If the examiner finds any interfering application for the same subject matter, he/she should consider

such application simultaneously with this application and should state in the official letter of such application that she/he is taking it out of its turn because of possible interference.

Should an appeal be taken in this application or should this application becomes involved in an interference, consideration of the appeal and the interference will be expedited by all Patent and Trademark Office officials concerned, contingent likewise upon diligent prosecution by the applicant.

After allowance, this application will be given priority for printing. See M.P.E.P. § 1309.

Inquiries regarding this decision should be directed to Clayton E. LaBalle at (703) 308-0519.

Clayton E. LaBalle, Special Programs Examiner
Technology Center 2800
Semiconductors, Electrical and Optical
Systems and Components

UNITED STATES PATENT AND TRADEMARK OFFICE

UNITED STATES DEPARTMENT OF COMMERCE
United States Patent and Trademark Office
Address: COMMISSIONER FOR PATENTS
P.O. Box 1450
Alexandria, Virginia 22313-1450
www.uspto.gov

CROMPTON, SEAGER & TUFTE, LLC
1221 NICOLLET AVENUE
SUITE 800
MINNEAPOLIS, MN 55403-2420

Mail Date: 04/21/2010

Applicant	: John Daniel	: DECISION ON REQUEST FOR
Patent Number	: 7618433	: RECALCULATION of PATENT
Issue Date	: 11/17/2009	: TERM ADJUSTMENT IN VIEW
Appliction No	: 10/391,261	: OF WYETH AND NOTICE OF INTENT TO
Filed	: 03/18/2003	: ISSUE CERTIFICATE OF CORRECTION
		:

The Request for Recalculation is **GRANTED** to the extent indicated.

The patent term adjustment has been determined to be **1145** days. The USPTO will *sua sponte* issue a certificate of correction reflecting the amount of PTA days determined by the recalculation.

Prior to the issuance of the certificate of correction, the USPTO will afford patentee an opportunity to be heard and request reconsideration. Accordingly, patentee has **one month or thirty (30) days**, whichever is longer, to file a request for reconsideration of this patent term adjustment calculation. See 35 U.S.C. 154(b)(3)(B)(ii) and 37 CFR 1.322(a)(4). No extensions of time will be granted under 37 CFR 1.136.

Patentee should use document code PET.OP if electronically filing a request for reconsideration of this patent term adjustment calculation. The patentee must also include the information required by 37 CFR 1.705(b)(2) and the fee required by 37 CFR 1.18(e). If patentee does not file a timely request for reconsideration of this patent term adjustment calculation including the information required by 37 CFR 1.705(b)(2) and the fee required by 37 CFR 1.18(e), the USPTO will issue a certificate of correction reflecting the PTA determination noted above.

Patentee should be aware that in order to preserve the right to review in the United States District Court for the District of Columbia of the USPTO patent term adjustment determination, patentee must ensure that he or she also take the steps required under 35 U.S.C. 154(b)(4)(A) in a timely manner. Nothing in the request for recalculation should be construed as providing an alternative time frame for commencing a civil action under 35 U.S.C. 154(b)(4)(A).

Any questions concerning this decision should be directed to the Office of Patent Legal Administration at 571-272-7702.

UNITED STATES PATENT AND TRADEMARK OFFICE

FEB 27 2007

Commissioner for Patents
United States Patent and Trademark Office
P.O. Box 1450
Alexandria, VA 22313-1450
www.uspto.gov

GOODWIN PROCTER LLP
PATENT ADMINISTRATOR
EXCHANGE PLACE
BOSTON MA 02109-2881

In re Application of	:
Thomas A. Steitz et al	: PETITION TO MAKE SPECIAL
Serial No.: 10/391,289	:
Filed: March 17, 2003	:
Attorney Docket No.: RIB-001DIV	

This is in response to the petition filed July 22, 2003, to make the above-identified application special under the provisions of 37 CFR 1.102(d). The delay in acting on this petition is regretted, however it was only recently discovered as unacted on.

Applicant has satisfied the provisions set forth in M.P.E.P. 708.02, XII. Therefor the petition is **GRANTED**.

The application will be forwarded to the examiner for consideration of applicants last reply and further action as warranted.

Should there be any questions with regard to this letter please contact William R. Dixon, Jr. by letter addressed to the Director, Technology Center 1600, P.O. Box 1450, Alexandria, VA 22313-1450, or by telephone at 571-272-0519 or by facsimile transmission to the Office general facsimile number, 571-273-8300.

William R. Dixon, Jr.
Special Program Examiner
Technology Center 1600

UNITED STATES PATENT AND TRADEMARK OFFICE

FEB 27 2007

Commissioner for Patents
United States Patent and Trademark Office
P.O. Box 1450
Alexandria, VA 22313-1450
www.uspto.gov

GOODWIN PROCTER LLP
PATENT ADMINISTRATOR
EXCHANGE PLACE
BOSTON MA 02109-2881

In re Application of	:
Thomas A. Steitz et al	:
Serial No.: 10/391,289	: PETITION DECISION
Filed: March 17, 2003	:
Attorney Docket No.: RIB-001DIV	:

This is a decision on the PETITION FOR ACCEPTANCE OF COLOR DRAWINGS UNDER 37 CFR 1.84(a)(2). The petition was filed July 22, 2003. The delay in acting on this petition is regretted. Entry of color drawings requires: 1) three sets of the color drawings, 2) a proper amendment to the specification indicating color photographs or drawings are present in the file, and 3) the required fee under 37 CFR 1.17(h).

A review of the application record indicates that the petition meets all of the requirements for acceptance of color drawings. This is not to be construed that all of the drawings are accepted, only that the color drawings are acceptable.

The petition is **GRANTED**.

Should there be any questions with respect to this decision, please contact William R. Dixon, Jr., by mail addressed to: Director, Technology Center 1600, at the address listed above, or by telephone at 571-272-0519 or by facsimile transmission at 571-273-8300.

George Elliott
Director, Technology Center 1600

UNITED STATES PATENT AND TRADEMARK OFFICE

COMMISSIONER FOR PATENTS
UNITED STATES PATENT AND TRADEMARK OFFICE
P.O. BOX 1450
ALEXANDRIA, VA 22313-1450
www.uspto.gov

Paper No. 5

PITNEY BOWES INC.
INTELLECTUAL PROPERTY
AND TECHNOLOGY LAW DEPARTMENT
35 WATERVIEW DRIVE, P.O. BOX 3000
SHELTON, CT 06484-8000

COPY MAILED

NOV 25 2003

OFFICE OF PETITIONS

In re Application of: :
Phillipe Bergoend and : ON PETITION
Gilles Nauche :
Application No. 10/391,329 :
Filed: March 18, 2003 :
Title of Invention: METHOD AND :
DEVICE FOR PRINTING AND PREPARING :
MAIL FROM A DATA STREAM :

This is in response to a petition under 37 CFR 1.47(a), filed September 22, 2003, to allow a person to whom the invention has been assigned, or who otherwise shows sufficient proprietary interest in an application, to proceed with the application.

The petition is **dismissed**.

Rule 47 applicant is given TWO (2) MONTHS from the mailing date of this decision to reply, correcting the below-noted deficiencies. Any reply should be entitled "Request for Reconsideration of Petition Under 37 CFR 1.47(a)", and should only address the deficiencies noted below, except that the reply may include an oath or declaration executed by the non-signing inventor. Failure to respond will result in abandonment of the application. Any extensions of time will be governed by 37 CFR 1.136(a).

The above-identified application was filed on March 18, 2003, without a fully executed oath or declaration. The Office mailed a Notice to File Missing Parts of Nonprovisional Application (hereinafter "Notice"), on May 14, 2003, requiring *inter alia*, an executed oath or declaration.

In response to the Notice, Applicant files the instant petition under 37 CFR 1.47(a), to allow inventor Phillipe Bergoend to proceed with the application on his own behalf and on behalf of inventor Gilles Nauche. In support of the petition a

Statement of Facts is provided wherein wherein Counsel avers that he provided a French/ English Declaration and Power of Attorney ("Declaration") with a request that French Local Counsel arrange for review and signature by each of the two inventors. The Statement of Facts further provides, upon information and belief, that while inventor Nauche has stated that he is "ready to sign" the declaration, he has in fact refused to review and sign the declaration.

Applicable Law

A grantable petition under 37 CFR 1.47(a) requires: (1) proof that the non-signing inventor cannot be reached or refuses to sign the oath or declaration after having been presented with the application papers (specification, claims and drawings); (2) an acceptable oath or declaration in compliance with 35 U.S.C. §§ 115 and 116; (3) the petition fee; and (4) a statement of the last known address of the non-signing inventor. Applicant lacks item (1).

As to item (1), where it is alleged that an applicant refuses to join an application, the applicant must establish that the nonsigning inventor was presented with the application for signature. The Manual of Patent Examining Procedure ("MPEP") states that

> A refusal by an inventor to sign an oath or declaration when the inventor has not been presented with the application papers does not itself suggest that the inventor is refusing to join the application unless it is clear that the inventor understands exactly what he or she is being asked to sign and refuses to accept the application papers. A copy of the application papers should be sent to the last known address of the nonsigning inventor, or, if the nonsigning inventor is represented by counsel, to the address of the nonsigning inventor's attorney.

MPEP 409.03(d).

As to item (1), applicant failed to show or provide proof that the inventor refused to sign the declaration. Before an inventor can refuse to sign an oath or declaration, he must have been *presented with a copy of the application papers*

(specification, claims and drawings). *See* MPEP 409.03(d). Applicant must demonstrate that a copy of the application papers were *presented* to the inventor (or the inventor's legal representative), but that he refused or did not respond to the request that he sign the oath/declaration in order to show refusal to join in the application. *The proof of the pertinent events should be made by a statement of someone with first hand knowledge of the events.* (Emphasis supplied).

Fuether as to item (1), Applicant has not provided a statement by a person with first hand knowledge of the events. The Statement of Facts provided makes several statements purporting to evidence inventors Nauche's resusal to execute the Declaration; however, the statements relied upon are made upon information and belief. *A statement by a person with first hand knowledge of the events relied upon to establish that inventor Nauche refuses to execute the Declaration is required.* (Emphasis supplied).

Further correspondence with respect to this matter should be addressed as follows:

By mail: Commissioner for Patents
PO Box 1450
Alexandria, VA 22313-1450

By FAX: (703) 872-9306
Attn: Office of Petitions

By hand: 2201 South Clark Place
Customer Window
Crystal Plaza Two, Lobby Room 1B03
Arlington, VA 22202

Telephone inquiries concerning this decision should be directed to the undersigned at (703) 305-0014.

Derek L. Woods
Petitions Attorney
Office of Petitions

UNITED STATES PATENT AND TRADEMARK OFFICE

COMMISSIONER FOR PATENTS
UNITED STATES PATENT AND TRADEMARK OFFICE
P.O. BOX 1450
ALEXANDRIA, VA 22313-1450
www.uspto.gov

MICHAEL J. URBANO
1445 PRINCETON DRIVE
BETHLEHEM, PA 18017-9166

COPY MAILED

DEC 20 2004

OFFICE OF PETITIONS

ON PETITION

In re Application of	:	
Avinoam Kornblit, et al.	:	
Application No. 10/391,330	:	
Filed: March 18, 2003	:	
Attorney Docket No. 26-8-1	:	

This is a decision on the petition, filed December 17, 2004, under 37 CFR 1.313(c)(2) to withdraw the above-identified application from issue after payment of the issue fee.

The petition is **GRANTED**.

The above-identified application is withdrawn from issue for consideration of a submission under 37 CFR 1.114 (request for continued examination). See 37 CFR 1.313(c)(2).

Petitioner is advised that the issue fee paid on November 8, 2004, in the above-identified application cannot be refunded. If, however, the above-identified application is again allowed, petitioner may request that it be applied towards the issue fee required by the new Notice of Allowance. [1]

Telephone inquiries relating to this decision should be directed to the undersigned at (571) 272-3204.

The application is being referred to Technology Center AU 2873 for further processing of the request for continued examination under 37 CFR 1.114 filed December 17, 2004.

Sherry D. Brinkley
Petitions Examiner
Office of Petitions
Office of the Deputy Commissioner
for Patent Examination Policy

[1]The request to apply the issue fee to the new Notice may be satisfied by completing and returning the new Issue Fee Transmittal Form PTOL-85(b), which includes the following language thereon: "Commissioner for Patents is requested to apply the Issue Fee and Publication Fee (if any) or re-apply any previously paid issue fee to the application identified above." Petitioner is advised that, whether a fee is indicated as being due or not, the Issue Fee Transmittal Form **must** be completed and timely submitted to avoid abandonment. Note the language in bold text on the first page of the Notice of Allowance and Fee(s) Due (PTOL-85).

UNITED STATES PATENT AND TRADEMARK OFFICE

Commissioner for Patents
United States Patent and Trademark Office
P.O. Box 1450
Alexandria, VA 22313-1450
www.uspto.gov

COPY MAILED

MAR 30 2007

OFFICE OF PETITIONS

FRANCE COTE
BERESKIN & PARR
SUITE 4000, SCOTIA PLAZA
BOX 301, 40 KING STREET WEST
TORONTO M5H 3Y2 CA CANADA

RECEIVED
CANCELLED
MAR 30 2007
OFFICE OF PETITIONS

In re Application of	:
Thomas Chang et al	:
Application No. 10/391,340	: DECISION GRANTING PETITION
Filed: March 18, 2003	: UNDER 37 CFR 1.137(b)
Attorney Docket No. SWA-005US2	:

This is a decision on the petition under 37 CFR 1.137(b), filed November 27, 2006, to revive the above-identified application.

The petition is **GRANTED**.

The petition satisfies the conditions for revival pursuant to the provisions of 37 CFR 1.137(b) in that (1) the reply in the form of an amendment; (2) the petition fee; and (3) the required statement of unintentional delay have been received. Accordingly, the reply to the Restriction Requirement of March 13, 2006, is accepted as having been unintentionally delayed.

Telephone inquiries concerning this decision should be directed to the undersigned at (571) 272-3208.

This matter is being referred to Technology Center AU 1642.

Karen Creasy

Karen Creasy
Petitions Examiner
Office of Petitions

UNITED STATES PATENT AND TRADEMARK OFFICE

COMMISSIONER FOR PATENTS
UNITED STATES PATENT AND TRADEMARK OFFICE
P.O. BOX 1450
ALEXANDRIA, VA 22313-1450
www.uspto.gov

Robert Plotkin, PC
45 Butternut Circle
Concord, MA 01742-1937

COPY MAILED

JUN 06 2008

OFFICE OF PETITIONS

ON PETITION

In re Application of :
Jory Bell et al. :
Application No. 10/391,360 :
Filed: March 18, 2003 :
Attorney Docket No. D0000-1021 :

This is a decision on the petition under the unintentional provisions of 37 CFR 1.137(b), filed January 24, 2008, to revive the above-identified application.

The petition is **GRANTED**.

The application became abandoned for failure to reply in a timely manner to the non-final Office action mailed, June 19, 2007, which set a shortened statutory period for reply of three (3) months. No extensions of time under the provisions of 37 CFR 1.136(a) were obtained. Accordingly, the application became abandoned on September 20, 2007. A Notice of Abandonment was mailed on March 10, 2008.

The petition satisfies the requirements of 37 CFR 1.137(b) in that petitioner has supplied (1) the reply in the form of a continuing application under 37 CFR 1.53(b), (2) the petition fee of $770.00, and (3) a proper statement of unintentional delay. Accordingly, the failure to timely reply to the Office action of June 19, 2007 is accepted as being unintentionally delayed.

The petition is not accompanied by a statement of express abandonment in favor of the filing of a continuing application. In order to facilitate action, the petition to revive should include reference to the filing of a continuing application and a letter of express abandonment conditional upon the granting of the petition and of a filing date to the continuing application. Nevertheless, in view of the statement that the reply is the filing of a continuing application, this will be construed as a request to expressly abandon this application in favor of the granting of a filing date to the continuing application. Accordingly, this application is revived solely for the purpose of continuity with continuing Application No. 12/010,434, filed January 24, 2008. As continuity has been established by the revival of this application, this application is again abandoned in favor of the continuing application. If this was not the intent of applicant, the Office should be promptly notified.

There is no indication that the person signing the petition was ever given a power of attorney or authorization of agent to prosecute the above-identified application. However, in accordance with 37 CFR 1.34(a), the signature appearing on the petition shall constitute a representation to the United States Patent and Trademark Office that he/she is authorized to represent the particular party in whose behalf he/she acts.

It is not apparent whether the person signing the statement of unintentional delay was in a position to have firsthand or direct knowledge of the facts and circumstances of the delay at issue. Nevertheless, such statement is being treated as having been made as the result of a reasonable inquiry into the facts and circumstances of such delay. See 37 CFR 10.18(b) and Changes to Patent Practice and Procedure; Final Rule Notice, 62 Fed. Reg. 53131, 53178 (October 10, 1997), 1203 Off. Gaz. Pat. Office 63, 103 (October 21, 1997). In the event that such an inquiry has not been made, petitioner must make such an inquiry. If such inquiry results in the discovery that it is not correct that the entire delay in filing the required reply from the due date for the reply until the filing of a grantable petition pursuant to 37 CFR 1.137(b) was unintentional, petitioner must notify the Office.

The application file does not indicate a change of address has been filed in this case, although the address given on the petition differs from the address of record. If petitioner desires to receive future correspondence regarding this application, the appropriate power of attorney or authorization of agent must be submitted. A courtesy copy of this decision is being mailed to the address noted on the petition. However, until otherwise instructed, all future correspondence regarding this application will be mailed solely to the address of record.

Telephone inquiries concerning this decision should be directed to Kimberly Inabinet at (571) 272-4618.

Andrea Smith
Petitions Examiner
Office of Petitions

cc: John Mattingly
1800 Diagonal Road, Suite 370
Alexandria, VA 22314

UNITED STATES PATENT AND TRADEMARK OFFICE

Commissioner for Patents
United States Patent and Trademark Office
P.O. Box 1450
Alexandria, VA 22313-1450
www.uspto.gov

QUARLES & BRADY
411 E. WISCONSIN AVENUE
SUITE 2040
MILWAUKEE, WI 53202-4497

COPY MAILED

JUL 2 5 2006

OFFICE OF PETITIONS

In re Application of	:	
Gary A. Dahl	:	
Application No. 10/391,368	:	DECISION DISMISSING PETITIONS
Filed: March 18, 2003	:	UNDER 37 CFR 1.78(a)(3) AND (a)(6)
Attorney Docket No. 310307.90231	:	

This is a decision on the petition under 37 CFR §§ 1.78(a)(3) and 1.78(a)(6), filed December 15, 2005, to accept an unintentionally delayed claim under 35 U.S.C. §§ 120 and 119(e) for the benefit of priority to the prior-filed nonprovisional and provisional applications set forth in the concurrently filed amendment.

The petition is **DISMISSED**

A petition for acceptance of a claim for late priority under 37 CFR §§ 1.78(a)(3) and 1.78(a)(6) is only applicable to those applications filed on or after November 29, 2000 and after the expiration of the period specified in 37 CFR §§ 1.78(a)(2)(ii) and 1.78(a)(5)(ii). In addition, the petition under 37 CFR §§ 1.78(a)(3) and 1.78(a)(6) must be accompanied by:

(1) the reference required by 35 U.S.C. §§ 120 and 119(e) and 37 CFR §§ 1.78(a)(2)(i) and 1.78(a)(5)(i) of the prior-filed application, unless previously submitted;
(2) the surcharge set forth in § 1.17(t); and
(3) a statement that the entire delay between the date the claim was due under 37 CFR §§ 1.78(a)(2)(ii) and 1.78(a)(5)(ii) and the date the claim was filed was unintentional. The Director may require additional where there is a question whether the delay was unintentional.

The petition does not comply with item (1).

The amendment submitted with the petition seeks a claim for benefit of priority to nonprovisional Application No. 09/891,661 and provisional Application No. 60/256,625.

However, provisional Application No. 60/256,625 lacks a common inventor with intermediate Application No. 09/891,661. Since the petition states that "the delay in referencing the prior-filed U.S. Application No. 09/891,661 filed June 21, 2006 and U.S. Provisional Application No. 60/214,100 filed June 26, 2000 in the specification was unintentional," it appears that the amendment should be referencing Application No. 60/214,100, since that application does in fact have a common inventor with intermediate Application No. 09/891,661.

Before the petition can be granted, correction of the claim for priority in either an Application Data Sheet or an amendment (complying with the provisions of 37 CFR 1.121 and 37 CFR 1.76(b)(5)) and a renewed petition under 37 CFR §§ 1.78(a)(3) and 1.78(a)(6) are required.

Further correspondence with respect to this matter should be addressed as follows:

By mail: Mail Stop PETITIONS
Commissioner for Patents
Post Office Box 1450
Alexandria, VA 22313-1450

By hand: Customer Service Window
Mail Stop Petitions
Randolph Building
401 Dulany Street
Alexandria, VA 22314

By fax: (571) 273-8300
ATTN: Office of Petitions

Any questions concerning this matter may be directed to the undersigned at (571) 272-3218.

Frances Hicks
Petitions Examiner
Office of Petitions

UNITED STATES PATENT AND TRADEMARK OFFICE

Commissioner for Patents
United States Patent and Trademark Office
P.O. Box 1450
Alexandria, VA 22313-1450
www.uspto.gov

QUARLES & BRADY
411 E. WISCONSIN AVENUE
SUITE 2040
MILWAUKEE, WI 53202-4497

COPY MAILED

JAN 18 2007

OFFICE OF PETITIONS

In re Application of	:
Gary A. Dahl	:
Application No. 10/391,368	: DECISION ON PETITIONS
Filed: March 18, 2003	: UNDER 37 CFR 1.78(a)(3) AND (a)(6)
Attorney Docket No. 310307.90231	:

This is a decision on the renewed petitions under 37 CFR §§ 1.78(a)(3) and 1.78(a)(6), filed October 2, 2006, to accept an unintentionally delayed claim under 35 U.S.C. §§120 and 119(e) for the benefit of the prior-filed applications set forth in the concurrently filed amendment.

The petitions are **GRANTED.**

A petition for acceptance of a claim for late priority under 37 CFR §§ 1.78(a)(3) and 1.78(a)(6) is only applicable to those applications filed on or after November 29, 2000. Further, the petition is appropriate only after the expiration of the period specified in 37 CFR §§ 1.78(a)(2)(ii) and 1.78(a)(5)(ii). In addition, the petition under 37 CFR §§ 1.78(a)(3) and 1.78(a)(6) must be accompanied by:

(1) the reference required by 35 U.S.C. §§ 120 and 119(e) and 37 CFR §§ 1.78(a)(2)(i) and 1.78(a)(5)(i) of the prior-filed application, unless previously submitted;
(2) the surcharge set forth in § 1.17(t); and
(3) a statement that the entire delay between the date the claim was due under 37 CFR §§ 1.78(a)(2)(ii) and 1.78(a)(5)(ii) and the date the claim was filed was unintentional. The Director may require additional information where there is a question whether the delay was unintentional.

Additionally, the instant nonprovisional application must be pending at the time of filing of the reference to the prior-filed provisional application as required by 37 CFR 1.78(a)(5)(ii). Further, the nonprovisional application claiming the benefit of the prior-filed provisional application must have been filed within twelve months of the filing date of the prior-filed provisional application.

All the above requirements having been satisfied, the late claim for benefit of priority under 35 U.S.C. §§ 120 and 119(e) is accepted as being unintentionally delayed.

The granting of the petition to accept the delayed benefit claim to the prior-filed applications under 37 CFR §§ 1.78(a)(3) and 1.78(a)(6) should not be construed as meaning that this application is entitled to the benefit of the filing date of the prior-filed applications. In order for this application to be entitled to the benefit of the prior-filed applications, all other requirements under 35 U.S.C. §§120 and 1.78(a)(1) and (a)(2) and under 35 U.S.C. §119(e) and 37 CFR 1.78(a)(4) and (a)(5) must be met. Similarly, the fact that the corrected Filing Receipt accompanying this decision on petition includes the prior-filed applications should not be construed as meaning that applicant is entitled to the claim for benefit of priority to the prior-filed applications noted thereon. Accordingly, the examiner will, in due course, consider this benefit claim and determine whether the application is entitled to the benefit of the earlier filing date.

A corrected Filing Receipt, which includes the priority claim to the prior-filed applications, accompanies this decision on petition.

The duplicate petition fee assessed to petitioner's deposit account for the present renewed petition will be refunded to petitioner's deposit account in due course.

Any questions concerning this matter may be directed to the undersigned at (571) 272-3218. All other inquiries concerning either the examination procedures or status of the application should be directed to the Technology Center.

It is noted that a Notice of Abandonment was mailed on January 11, 2007 for failure to timely reply to the non-final Office action of June 29, 2006. Accordingly, until this application is revived, no further action in this application is necessary. If this application is revived, applicant's claim for benefit of priority under 35 U.S.C. § §120 and 119(e) of the prior-filed nonprovisional and provisional applications will be considered by the examiner of this application.

Frances Hicks
Petitions Examiner
Office of Petitions

ATTACHMENT: Corrected Filing Receipt

UNITED STATES PATENT AND TRADEMARK OFFICE

UNITED STATES DEPARTMENT OF COMMERCE
United States Patent and Trademark Office
Address: COMMISSIONER FOR PATENTS
P.O. Box 1450
Alexandria, Virginia 22313-1450
www.uspto.gov

APPL NO.	FILING OR 371 (c) DATE	ART UNIT	FIL FEE REC'D	ATTY.DOCKET NO	DRAWINGS	TOT CLMS	IND CLMS
10/391,368	03/18/2003	1637	674	310307.90231	6	32	4

CONFIRMATION NO. 4545

CORRECTED FILING RECEIPT

OC000000022030252

26710
QUARLES & BRADY LLP
411 E. WISCONSIN AVENUE
SUITE 2040
MILWAUKEE, WI 53202-4497

Date Mailed: 01/17/2007

Receipt is acknowledged of this regular Patent Application. It will be considered in its order and you will be notified as to the results of the examination. Be sure to provide the U.S. APPLICATION NUMBER, FILING DATE, NAME OF APPLICANT, and TITLE OF INVENTION when inquiring about this application. Fees transmitted by check or draft are subject to collection. Please verify the accuracy of the data presented on this receipt. **If an error is noted on this Filing Receipt, please mail to the Commissioner for Patents P.O. Box 1450 Alexandria Va 22313-1450. Please provide a copy of this Filing Receipt with the changes noted thereon. If you received a "Notice to File Missing Parts" for this application, please submit any corrections to this Filing Receipt with your reply to the Notice. When the USPTO processes the reply to the Notice, the USPTO will generate another Filing Receipt incorporating the requested corrections (if appropriate).**

Applicant(s)

Gary A. Dahl, Madison, WI;

Power of Attorney:

Jean Baker--35433

Domestic Priority data as claimed by applicant

This application is a CON of 09/891,661 06/26/2001 PAT 6,562,575
which claims benefit of 60/214,100 06/26/2000

Foreign Applications

If Required, Foreign Filing License Granted: 05/20/2003

The country code and number of your priority application, to be used for filing abroad under the Paris Convention, is US10/391,368

Projected Publication Date: Not Applicable

Non-Publication Request: No

Early Publication Request: No

** SMALL ENTITY **

Title

Analyte-specific assays based on formation of a replicase substrate

Preliminary Class

435

PROTECTING YOUR INVENTION OUTSIDE THE UNITED STATES

Since the rights granted by a U.S. patent extend only throughout the territory of the United States and have no effect in a foreign country, an inventor who wishes patent protection in another country must apply for a patent in a specific country or in regional patent offices. Applicants may wish to consider the filing of an international application under the Patent Cooperation Treaty (PCT). An international (PCT) application generally has the same effect as a regular national patent application in each PCT-member country. The PCT process **simplifies** the filing of patent applications on the same invention in member countries, but **does not result** in a grant of "an international patent" and does not eliminate the need of applicants to file additional documents and fees in countries where patent protection is desired.

Almost every country has its own patent law, and a person desiring a patent in a particular country must make an application for patent in that country in accordance with its particular laws. Since the laws of many countries differ in various respects from the patent law of the United States, applicants are advised to seek guidance from specific foreign countries to ensure that patent rights are not lost prematurely.

Applicants also are advised that in the case of inventions made in the United States, the Director of the USPTO must issue a license before applicants can apply for a patent in a foreign country. The filing of a U.S. patent application serves as a request for a foreign filing license. The application's filing receipt contains further information and guidance as to the status of applicant's license for foreign filing.

Applicants may wish to consult the USPTO booklet, "General Information Concerning Patents" (specifically, the section entitled "Treaties and Foreign Patents") for more information on timeframes and deadlines for filing foreign patent applications. The guide is available either by contacting the USPTO Contact Center at 800-786-9199, or it can be viewed on the USPTO website at http://www.uspto.gov/web/offices/pac/doc/general/index.html.

For information on preventing theft of your intellectual property (patents, trademarks and copyrights), you may wish to consult the U.S. Government website, http://www.stopfakes.gov. Part of a Department of Commerce initiative, this website includes self-help "toolkits" giving innovators guidance on how to protect intellectual property in specific countries such as China, Korea and Mexico. For questions regarding patent enforcement issues, applicants may call the U.S. Government hotline at 1-866-999-HALT (1-866-999-4158).

LICENSE FOR FOREIGN FILING UNDER
Title 35, United States Code, Section 184
Title 37, Code of Federal Regulations, 5.11 & 5.15

GRANTED

The applicant has been granted a license under 35 U.S.C. 184, if the phrase "IF REQUIRED, FOREIGN FILING LICENSE GRANTED" followed by a date appears on this form. Such licenses are issued in all applications where the conditions for issuance of a license have been met, regardless of whether or not a license may be required as set forth in 37 CFR 5.15. The scope and limitations of this license are set forth in 37 CFR 5.15(a) unless an earlier license has been issued under 37 CFR 5.15(b). The license is subject to revocation upon written notification. The date indicated is the effective date of the license, unless an earlier license of similar scope has been granted under 37 CFR 5.13 or 5.14.

This license is to be retained by the licensee and may be used at any time on or after the effective date thereof unless it is revoked. This license is automatically transferred to any related applications(s) filed under 37 CFR 1.53(d). This license is not retroactive.

The grant of a license does not in any way lessen the responsibility of a licensee for the security of the subject matter as imposed by any Government contract or the provisions of existing laws relating to espionage and the national security or the export of technical data. Licensees should apprise themselves of current regulations especially with respect to certain countries, of other agencies, particularly the Office of Defense Trade Controls, Department of State (with respect to Arms, Munitions and Implements of War (22 CFR 121-128)); the Bureau of Industry and Security, Department of Commerce (15 CFR parts 730-774); the Office of Foreign Assets Control, Department of Treasury (31 CFR Parts 500+) and the Department of Energy.

NOT GRANTED

No license under 35 U.S.C. 184 has been granted at this time, if the phrase "IF REQUIRED, FOREIGN FILING LICENSE GRANTED" DOES NOT appear on this form. Applicant may still petition for a license under 37 CFR 5.12, if a license is desired before the expiration of 6 months from the filing date of the application. If 6 months has lapsed from the filing date of this application and the licensee has not received any indication of a secrecy order under 35 U.S.C. 181, the licensee may foreign file the application pursuant to 37 CFR 5.15(b).

UNITED STATES PATENT AND TRADEMARK OFFICE

Commissioner for Patents
United States Patent and Trademark Office
P.O. Box 1450
Alexandria, VA 22313-1450
www.uspto.gov

AUG - 1 2005

Koda & Andolia
2029 Century Park East
Suite 1140
Los Angeles, CA 90067-2983

In re Application of	:	
SHINICHI HIRAMOTO, et al.	:	DECISION ON PETITION
Application No. 10/391,384	:	TO WITHDRAW THE
Filed: March 18, 2003	:	HOLDING OF ABANDONMENT
For: A CONVEYING APPARATUS FOR	:	
SPOUTS OR BAGS WITH SPOUTS	:	

This is a decision on applicant's petition to withdraw the holding of abandonment, filed in the United States Patent and Trademark Office (USPTO), on April 06, 2005.

The petition is **DISMISSED.**

A review of the file record reveals that the application became abandoned for failure to respond to the Notice of Allowability and Fee(s) Due mailed to applicant on November 08, 2004. A Notice of Abandonment was mailed on March 29, 2005. It is noted that a Change of Correspondence Address was received February 25, 2005, a date more than three months after the mailing date of the Notice of Allowability and Fee(s) Due. As noted in applicant's petition, the Notice of Allowability and Fee(s) Due was mailed prior to the Change of Correspondence Address and should have been received.

Applicant's petition contends that the Notice of Allowability and Fee(s) Due mailed on November 08, 2004 was never received. In support thereof applicant has provided a copy of Applicant's file jacket of the above-identified application which shows no record of receipt or entry of the Notice of Allowability and Fee(s) Due mailed on November 08, 2004. This is not considered to be a docket record and is in adequate evidence of non-receipt of the Notice of Allowability and Fee(s) Due mailed to applicant on November 08, 2004.

There is a strong presumption that Office communications properly addressed and delivered to the United States Postal Services, are in fact delivered to the addressee. An allegation that the Office communication was not received must be overcome by a showing that it was not received.

The showing required to establish non-receipt of an Office communication must include all of the following requirements:

(1) A statement from the practitioner stating the Office communication was not received by the practitioner;

(2) A statement attesting to the fact that a search of the file jacket and docket records indicates that the Office communication was not received; and

(3) A copy of the docket record where the non-received Office communication would have been entered had it been received and docketed must be attached to and referenced in practitioner's statement.

The docket records indicated above must include **a copy of the list of all responses in the practitioner's office with the due date at and around February 08, 2005**. See Notice entitled "Withdrawing the Holding of Abandonment When Office Actions Are Not Received," 1156 OG 53 (November 16, 1993).

The petitioner has failed to comply with requirement (3) indicated above. Applicant has only set forth that the Notice of Allowability and Fee(s) Due mailed on November 08, 2004 was not received or placed in the file for application 10/391,384. A complete docket record with a copy of the list of all responses in the practitioner's office with the due date at and around February 08, 2005 is required.

Petitioner's evidence of non-receipt of the Notice of Allowability and Fee(s) Due mailed on November 08, 2004 is insufficient to withdraw the holding of abandonment, and the petition is **DISMISSED**.

Any request for reconsideration of this decision must be submitted within **TWO (2) MONTHS** from the mail date of this decision. Extensions of time under 37 CFR 1.136(a) are permitted. The reconsideration request should include a cover letter entitled "Renewed Petition Under 37 CFR 1.181."

Correspondence with respect to a Petition to Withdraw the Holding of Abandonment under *Delgar Inc. v. Schuyler* should be mailed to the Commissioner for Patents, P.O. Box 1450, Alexandria, VA 22313-1450.

Steven N. Meyers
Special Program Examiner
Patent Technology Center 3600
(571) 272-6611

SNM/rjc 7/26/05

UNITED STATES PATENT AND TRADEMARK OFFICE

Commissioner for Patents
United States Patent and Trademark Office
P.O. Box 1450
Alexandria, VA 22313-1450
www.uspto.gov

JAN 18 2006

William L. Androlia
KODA & ANDROLIA
2029 Century Park East, Suite 1140
Los Angeles, CA 90067-2983

In re Application of Shinichi Hiramoto et al. Application No. 10/391,384 Filed: March 18, 2003	: : : :	DECISION ON PETITION TO WITHDRAW THE HOLDING OF ABANDONMENT

For: A CONVEYING APPARATUS FOR SPOUTS OR BAGS WITH SPOUTS

This is a decision on Applicant's renewed petition to withdraw the holding of abandonment, filed in the United States Patent and Trademark Office (USPTO) on September 13, 2005.

The petition is **GRANTED**.

A review of the file record reveals that the application became abandoned for failure to respond to the Notice of Allowability and Fee(s) Due mailed to applicant on November 8, 2004. A Notice of Abandonment was mailed on March 29, 2005. It is noted that a Change of Correspondence Address was received February 25, 2005, a date more than three months after the mailing date of the Notice of Allowability and Fee(s) Due. As noted in Applicant's original petition, the Notice of Allowability and Fee(s) Due was mailed prior to the Change of Correspondence Address and should have been received.

Applicant's petition indicates that the Office Action mailed November 8, 2004 was never received. In support thereof, Applicant has provided a copy of Applicant's file jacket of the above-identified application that shows no record of receipt or entry of the Notice of Allowability and Fee(s) Due mailed on November 8, 2004. Applicant's renewed petition now provides a copy of a docket record for February 7-9, 2005, where the non-received Office action would have been entered had it been received and docketed.

There is a strong presumption that the Office communication, properly addressed and delivered to the United States Postal Services, was in fact delivered to the

addressee. An allegation that the Office communication was not received must be overcome by a showing that it was not received.

The showing required to establish non-receipt of an Office communication must include all of the following requirements:

(1) A statement from the practitioner stating that the Office communication was not received by the practitioner;

(2) A statement attesting to the fact that a search of the file jacket and docket records indicates that the Office communication was not received; and

(3) A copy of the docket record where the non-received Office communication would have been entered had it been received and docketed must be attached to and referenced in practitioner's statement.

The docket records indicated above must include a copy of the list of all responses in the practitioner's office with the due date at and around August 6, 2004. See Notice entitled "Withdrawing the Holding of Abandonment When Office Actions Are Not Received," 1156 O.G.53 (November 16, 1993).

Practitioner submits a statement that the above-noted Office Action was not received. Practitioner also attests to the fact that a search of the file jacket and docket records indicates that the Office Action was not received. Applicant's petition provides a copy of the docket record showing all responses due by practitioner's office between the dates of February 7, 2004 and February 9, 2004. This evidence is acceptable proof of non-receipt as provided by 1156 OG 53.

The application is being forwarded to the Supervisory Legal Instruments Examiner with instructions to withdraw the abandonment, return the application to pending status based on the reasoning in the case of *Delgar v. Schuyler*, 172 USPQ 513.

for

Randolph A. Reese
Special Programs Examiner
Technology Center 3600
(571) 272-6619

RAR/js: 9/23/05

UNITED STATES PATENT AND TRADEMARK OFFICE

UNITED STATES DEPARTMENT OF COMMERCE
United States Patent and Trademark Office
Address: COMMISSIONER FOR PATENTS
P.O. Box 1450
Alexandria, Virginia 22313-1450
www.uspto.gov

APPL NO.	FILING OR 371 (c) DATE	ART UNIT	FIL FEE REC'D	ATTY.DOCKET NO	DRAWINGS	TOT CLMS	IND CLMS
10/391,415	03/18/2003	1646	737	HO-P02449US2	12	53	2

CONFIRMATION NO. 5641

CORRECTED FILING RECEIPT

OC000000012474414

26271
FULBRIGHT & JAWORSKI, LLP
1301 MCKINNEY
SUITE 5100
HOUSTON, TX 77010-3095

Date Mailed: 04/28/2004

Receipt is acknowledged of this regular Patent Application. It will be considered in its order and you will be notified as to the results of the examination. Be sure to provide the U.S. APPLICATION NUMBER, FILING DATE, NAME OF APPLICANT, and TITLE OF INVENTION when inquiring about this application. Fees transmitted by check or draft are subject to collection. Please verify the accuracy of the data presented on this receipt. **If an error is noted on this Filing Receipt, please write to the Office of Initial Patent Examination's Filing Receipt Corrections, facsimile number 703-746-9195. Please provide a copy of this Filing Receipt with the changes noted thereon. If you received a "Notice to File Missing Parts" for this application, please submit any corrections to this Filing Receipt with your reply to the Notice. When the USPTO processes the reply to the Notice, the USPTO will generate another Filing Receipt incorporating the requested corrections (if appropriate).**

Applicant(s)

Charles A. Conrad, Spring, TX;

Domestic Priority data as claimed by applicant

This application is a CIP of 09/836,608 04/17/2001 ABN
and is a CIP of 09/836,136 04/17/2001 ABN
and is a CIP of 09/836,358 04/17/2001 ABN
and is a CIP of 09/836,366 04/17/2001 ABN
and is a CIP of 09/836,126 04/17/2001 ABN

Foreign Applications

If Required, Foreign Filing License Granted: 05/29/2003

Projected Publication Date: Not Applicable

Non-Publication Request: No

Early Publication Request: No

**** SMALL ENTITY ****

Title

Methods and compositions for catalytic DNA exchange in a sequence specific manner

Preliminary Class

536

LICENSE FOR FOREIGN FILING UNDER
Title 35, United States Code, Section 184
Title 37, Code of Federal Regulations, 5.11 & 5.15

GRANTED

The applicant has been granted a license under 35 U.S.C. 184, if the phrase "IF REQUIRED, FOREIGN FILING LICENSE GRANTED" followed by a date appears on this form. Such licenses are issued in all applications where the conditions for issuance of a license have been met, regardless of whether or not a license may be required as set forth in 37 CFR 5.15. The scope and limitations of this license are set forth in 37 CFR 5.15(a) unless an earlier license has been issued under 37 CFR 5.15(b). The license is subject to revocation upon written notification. The date indicated is the effective date of the license, unless an earlier license of similar scope has been granted under 37 CFR 5.13 or 5.14.

This license is to be retained by the licensee and may be used at any time on or after the effective date thereof unless it is revoked. This license is automatically transferred to any related applications(s) filed under 37 CFR 1.53(d). This license is not retroactive.

The grant of a license does not in any way lessen the responsibility of a licensee for the security of the subject matter as imposed by any Government contract or the provisions of existing laws relating to espionage and the national security or the export of technical data. Licensees should apprise themselves of current regulations especially with respect to certain countries, of other agencies, particularly the Office of Defense Trade Controls, Department of State (with respect to Arms, Munitions and Implements of War (22 CFR 121-128)); the Office of Export Administration, Department of Commerce (15 CFR 370.10 (j)); the Office of Foreign Assets Control, Department of Treasury (31 CFR Parts 500+) and the Department of Energy.

NOT GRANTED

No license under 35 U.S.C. 184 has been granted at this time, if the phrase "IF REQUIRED, FOREIGN FILING LICENSE GRANTED" DOES NOT appear on this form. Applicant may still petition for a license under 37 CFR 5.12, if a license is desired before the expiration of 6 months from the filing date of the application. If 6 months has lapsed from the filing date of this application and the licensee has not received any indication of a secrecy order under 35 U.S.C. 181, the licensee may foreign file the application pursuant to 37 CFR 5.15(b).

UNITED STATES PATENT AND TRADEMARK OFFICE

COMMISSIONER FOR PATENTS
UNITED STATES PATENT AND TRADEMARK OFFICE
P.O. BOX 1450
ALEXANDRIA, VA 22313-1450
www.uspto.gov

SAND & SEBOLT
AEGIS TOWER, SUITE 1100
4940 MUNSON STREET, NW
CANTON, OH 44718-3615

COPY MAILED

DEC 2 0 2004

OFFICE OF PETITIONS

In re Application of	:	
Jeremy A. Lowder, et al.	:	
Application No. 10/391,425	:	NOTICE
Filed: March 18, 2003	:	
Attorney Docket No. 1423-AC	:	

This is a notice regarding your request for acceptance of a fee deficiency submission under 37 CFR 1.28. On September 1, 1998, the Court of Appeals for the Federal Circuit held that 37 CFR 1.28(c) is the sole provision governing the time for correction of the erroneous payment of the issue fee as a small entity. **See DH Technology v. Synergystex International, Inc. 154 F.3d 1333, 47 USPQ2d 1865 (Fed. Cir. Sept. 1, 1998).**

The Office no longer investigates or rejects original or reissue applications under 37 CFR 1.56. **1098 Off. Gaz. Pat. Office 502 (January 3, 1989)**. Therefore, nothing in this Notice is intended to imply that an investigation was done.

Your fee deficiency submission under 37 CFR 1.28 is hereby **ACCEPTED**.

Inquiries related to this communication should be directed to the Office of Petitions Staff at (571) 272-3201.

This file is being referred to Technology Center 3724 for further prosecution.

Sherry D. Brinkley
Petitions Examiner
Office of Petitions
Office of the Deputy Commissioner
for Patent Examination Policy

UNITED STATES PATENT AND TRADEMARK OFFICE

Commissioner for Patents
United States Patent and Trademark Office
P.O. Box 1450
Alexandria, VA 22313-1450
www.uspto.gov

SAND & SEBOLT
AEGIS TOWER, SUITE 1100
4940 MUNSON STREET, NW
CANTON, OH 44718-3615

COPY MAILED

JUL 05 2007

OFFICE OF PETITIONS

In re Patent No. 7,013,784	:	
Issue Date: March 21, 2006	:	
Application No. 10/391,425	:	ON PETITION
Filed: March 18, 2003	:	
Attorney Docket No. 1423-AC	:	

This is a decision on the petition filed January 8, 2007, which is being treated as a request under 37 CFR 3.81(b)[1] to correct the name of the assignee on the front page of the above-identified patent by way of a Certificate of Correction.

The request is **GRANTED**.

Telephone inquiries concerning this decision may be directed to the undersigned at (571) 272-3204. Inquiries regarding the issuance of a certificate of correction should be directed to the Certificate of Correction Branch at (571) 272-4200.

The Certificates of Correction Branch will be notified of this decision granting the petition under 37 CFR 3.81(b) and directing issuance of the requested Certificate of Correction.

Sherry D. Brinkley
Petitions Examiner
Office of Petitions

[1] *See* MPEP 1309, subsection II; and Official Gazette of June 22, 2004.

APPROVED: /C.M./

Knobbe Martens Olson & Bear LLP

Intellectual Property Law

2040 Main Street
Fourteenth Floor
Irvine, CA 92614
Tel 949-760-0404
Fax 949-760-9502
www.kmob.com

Andrew M. Douglas

May 16, 2007

Commissioner for Patents
P.O. Box 1450
Alexandria, VA 22313-1450

Re: Letters Patent No. US 7,074,178
Title: TREATMENT OF PATIENTS WITH A COMPRESSIBLE ATTENUATION DEVICE
Issued: July 11, 2006
Our Reference: SOLACE.4CP1C2

Dear Sir:

Enclosed for filing is a Certificate of Correction in connection with the above-identified patent.

As the errors cited in the Certificate of Correction were incurred through the fault of the Applicant, this Statement is accompanied by the fees set forth. Please charge any additional fees to our Deposit Account No. 11-1410.

Respectfully submitted,

Knobbe, Martens, Olson & Bear, LLP

Andrew M. Douglas
Registration No. 51,212
Customer No. 20,995

Enclosure

3479863 // 022807: mb:bv

APPROVED: /C.M./

UNITED STATES PATENT AND TRADEMARK OFFICE
CERTIFICATE OF CORRECTION

PATENT NO. : 7,074,178
APPLICATION NO. : 10/391,447
ISSUE DATE : July 11, 2006
INVENTOR(S) : Kevin G. Connors

It is certified that errors appear in the above-identified patent and that said Letters Patent is hereby corrected as shown below:

In Other Publications, Page 1, Column 2, Line 2, delete "Complience," and insert - - Compliance, - -, therefor.

In Other Publications, Page 2, Column 1, Line 2, delete "Pergamon." and insert - - Pergamon, - -, therefor.

In Other Publications, Page 2, Column 1, Line 4, delete "Associates" and insert - - Associations - -, therefor.

In Other Publications, Page 2, Column 2, Line 25, delete "Enterocystoplesties" and insert - - Enterocystoplasties - -, therefor.

In Other Publications, Page 2, Column 2, Line 30, delete "Function." and insert - - Function, - -, therefor.

In Other Publications, Page 2, Column 2, Line 37, delete "1995." and insert - - 1996. - -, therefor.

In Other Publications, Page 2, Column 2, Line 48, delete "et al." and insert - - et al., - -, therefor.

In Other Publications, Page 2, Column 2, Line 54, delete "clincal" and insert - - clinical - -, therefor.

In Drawings, Sheet 46 of 47, Fig. 48A-D,

MAILING ADDRESS OF SENDER:

Andrew M. Douglas
KNOBBE, MARTENS, OLSON & BEAR, LLP
2040 Main Street, 14th Floor
Irvine, California 92614

DOCKET NO. SOLACE.4CP1C2

APPROVED: /C.M./

UNITED STATES PATENT AND TRADEMARK OFFICE
CERTIFICATE OF CORRECTION

PATENT NO. : 7,074,178
APPLICATION NO. : 10/391,447
ISSUE DATE : July 11, 2006
INVENTOR(S) : Kevin G. Connors

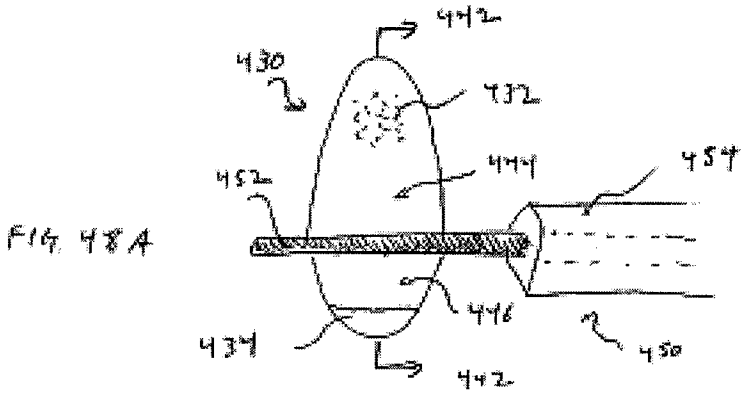

FIG. 48A

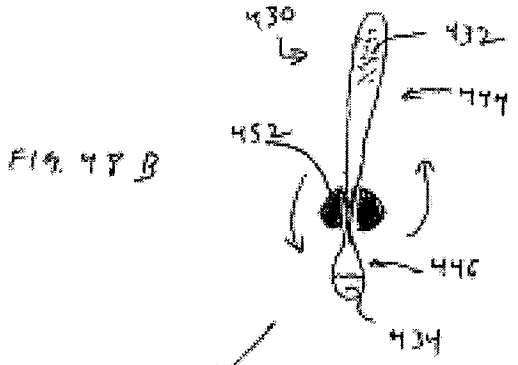

FIG. 48B

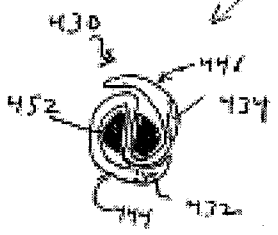

FIG. 48C

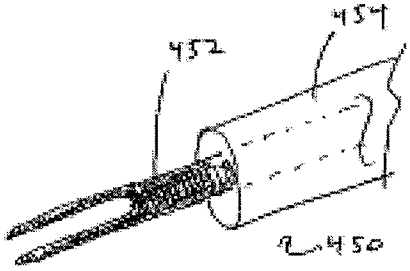

FIG. 48D

delete " "

MAILING ADDRESS OF SENDER:

Andrew M. Douglas
KNOBBE, MARTENS, OLSON & BEAR, LLP
2040 Main Street, 14th Floor
Irvine, California 92614

DOCKET NO. SOLACE.4CP1C2

UNITED STATES PATENT AND TRADEMARK OFFICE
CERTIFICATE OF CORRECTION

PATENT NO. : 7,074,178

APPLICATION NO. : 10/391,447

ISSUE DATE : July 11, 2006

INVENTOR(S) : Kevin G. Connors

FIG. 48A

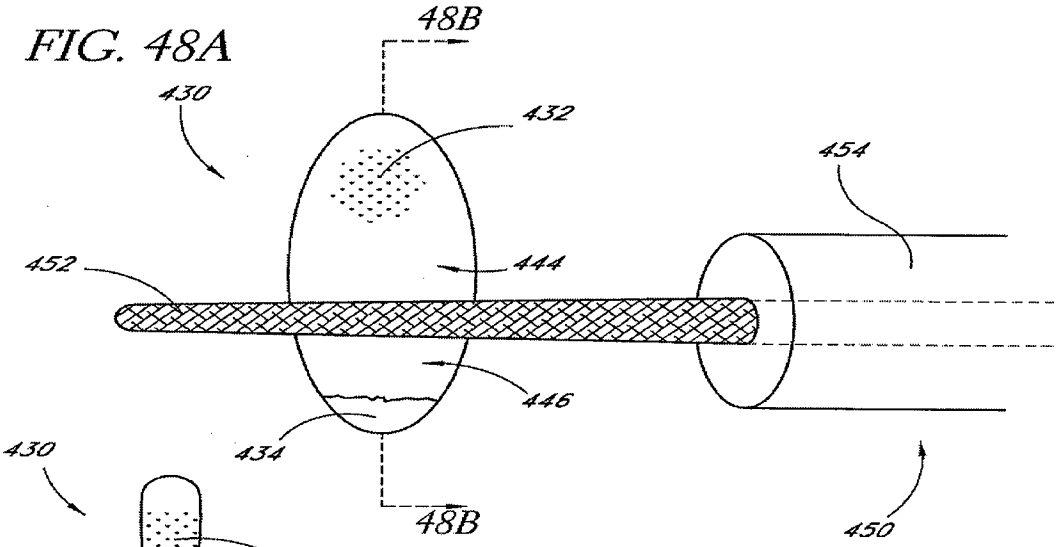

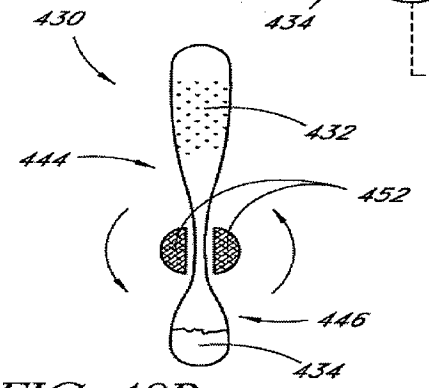

FIG. 48B

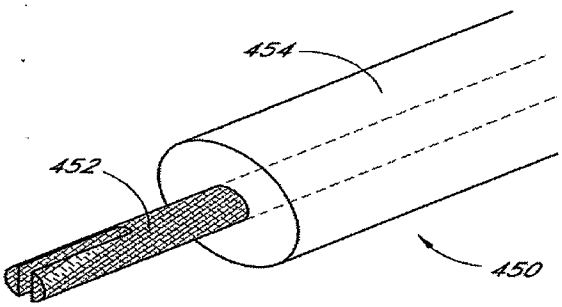

FIG. 48D

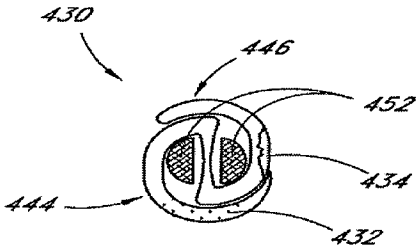

FIG. 48C

and insert - -

- -

MAILING ADDRESS OF SENDER:

Andrew M. Douglas
KNOBBE, MARTENS, OLSON & BEAR, LLP
2040 Main Street, 14th Floor
Irvine, California 92614

DOCKET NO. SOLACE.4CP1C2

UNITED STATES PATENT AND TRADEMARK OFFICE
CERTIFICATE OF CORRECTION

PATENT NO. : 7,074,178
APPLICATION NO. : 10/391,447
ISSUE DATE : July 11, 2006
INVENTOR(S) : Kevin G. Connors

In Drawings, Sheet 47 of 47, Fig. 49,

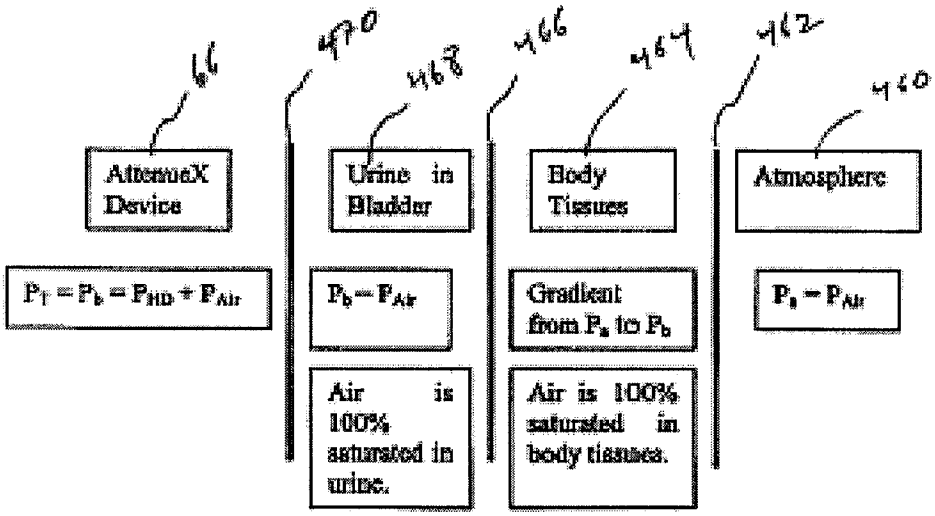

FIG. 49

delete " " and

MAILING ADDRESS OF SENDER:

Andrew M. Douglas
KNOBBE, MARTENS, OLSON & BEAR, LLP
2040 Main Street, 14th Floor
Irvine, California 92614

DOCKET NO. SOLACE.4CP1C2

UNITED STATES PATENT AND TRADEMARK OFFICE
CERTIFICATE OF CORRECTION

PATENT NO. : 7,074,178

APPLICATION NO. : 10/391,447

ISSUE DATE : July 11, 2006

INVENTOR(S) : Kevin G. Connors

FIG. 49

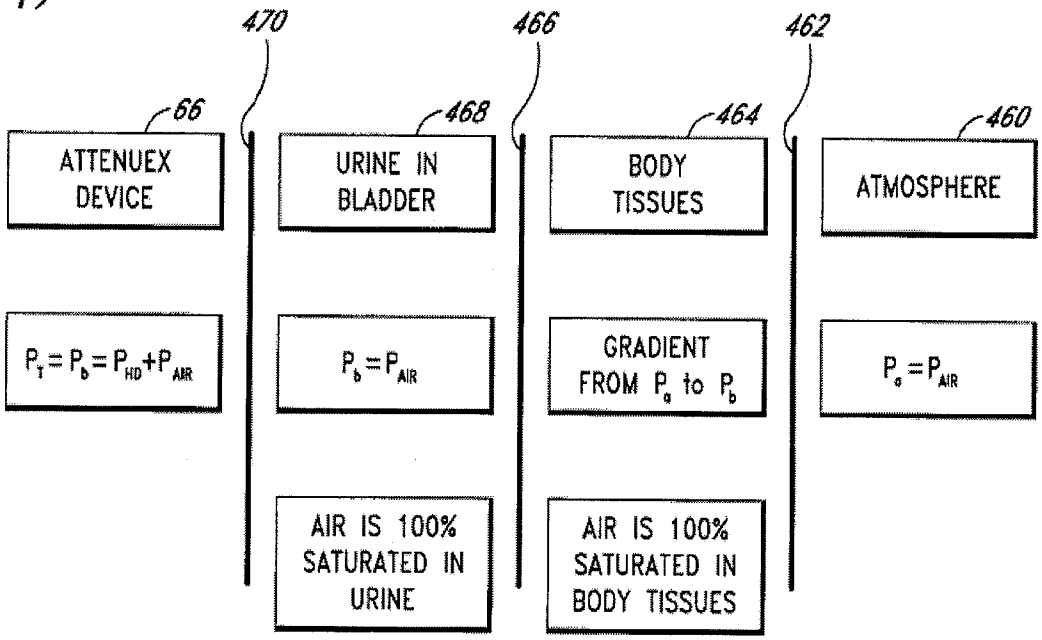

insert - - -

In Specification, Page 3, Line 23, Column 2, Line 51, delete "includes" and insert - - include - -, therefor.

In Specification, Page 3, Line 28, Column 2, Line 58, delete "relxing" and insert - - relaxing - -, therefor.

In Specification, Page 32, Line 19, Column 21, Line 43, delete "H2O" and insert - - H_2O - -, therefor.

In Specification, Page 2, Line 16, Column 30, Line 64, delete "martials" and insert - - materials - -, therefor.

MAILING ADDRESS OF SENDER:

Andrew M. Douglas
KNOBBE, MARTENS, OLSON & BEAR, LLP
2040 Main Street, 14th Floor
Irvine, California 92614

DOCKET NO. SOLACE.4CP1C2

APPROVED: /C.M./

UNITED STATES PATENT AND TRADEMARK OFFICE
CERTIFICATE OF CORRECTION

PATENT NO. : 7,074,178
APPLICATION NO. : 10/391,447
ISSUE DATE : July 11, 2006
INVENTOR(S) : Kevin G. Connors

In Specification, Page 2, Line 17, Column 30, Line 65, delete "an" and insert - - art - -, therefor.

In Specification, Page 2, Line 19, Column 31, Line 3, delete "no:" and insert - - not - -, therefor.

In Specification, Page 52, Line 20, Column 34, Line 53, delete "CO2" and insert - - CO_2 - -, therefor.

In Specification, Page 54, Line 16, Column 35, Line 64, delete "1402" and insert - - I 402 - -, therefor.

In Claim 10, Column 41, Line 9, delete "it," and insert - - in - -, therefor.

In Claim 10, Column 41, Line 9, delete "alter" and insert - - after - -, therefor.

In Claim 40, Column 42, Line 50, delete "wail." and insert - - wall. - -, therefor.

3468233 // 022607

MAILING ADDRESS OF SENDER:

Andrew M. Douglas
KNOBBE, MARTENS, OLSON & BEAR, LLP
2040 Main Street, 14th Floor
Irvine, California 92614

DOCKET NO. SOLACE.4CP1C2

SPE RESPONSE FOR CERTIFICATE OF CORRECTION

Paper No.:20090901

DATE : September 01, 2009

TO SPE OF : ART UNIT 3735

SUBJECT : Request for Certificate of Correction on Patent No.: 7,074,178

A response is requested with respect to the accompanying request for a certificate of correction.

Please complete this form and return with file, within **7** days to:
Certificates of Correction Branch - ST (South Tower) 9A22
Palm location **7590** - Tel. No. (703) 305-8309

With respect to the change(s) requested, correcting Office and/or Applicant's errors, should the patent read as shown in the certificate of correction? No new matter should be introduced, nor should the scope or meaning of the claims be changed.

Thank You For Your Assistance **Certificates of Correction Branch**

The request for issuing the above-identified correction(s) is hereby:

Note your decision on the appropriated box.

☒ **Approved** All changes apply.

☐ **Approved in Part** Specify below which changes **do not** apply.

☐ **Denied** State the reasons for denial below.

Comments:

/CHARLES A MARMOR II/
Supervisory Patent Examiner.Art Unit 3735

UNITED STATES PATENT AND TRADEMARK OFFICE

Commissioner for Patents
United States Patent and Trademark Office
P.O. Box 1450Alexandria, VA 22313-1450
www.uspto.gov

JJGJR.: 06-06

Paper No: __

STEPHEN T. SULLIVAN
ROBERTS MLOTKEWSKI
& HOBBES PC
7001 EAST PARADISE DRIVE
SCOTTSDATE AZ 85254-5175

COPY MAILED
JUN 27 2006
OFFICE OF PETITIONS

In re Application of	:	
Swett	:	
Application No. 10/391,477	:	ON PETITION
Filed: 17 March, 2003	:	
Attorney Docket No. 1050-002-DIV	:	

This is a decision on a petition filed on13 March, 2006, under 37 C.F.R. §1.137(b).

For the reasons set forth below, the petition under 37 C.F.R. §1.137(b) is **GRANTED**.

The change of address filed herein hereby is acknowledged and made of record.

BACKGROUND

The record indicates:

- Petitioner failed to reply timely to the non-final Office action mailed on 12 August, 2004, with reply due absent extension of time on or before 12 November, 2004;
- the instant application went abandoned by operation of law after midnight 12 November, 2004;

- the Office mailed the Notice of Abandonment on 18 March, 2005;
- Petitioner filed the instant petition on 13 March, 2006, with, *inter alia*, a reply in the form of an amendment, and made the statement of unintentional delay–thus, Petitioner appears to have satisfied the regulatory requirements under 37 C.F.R. §1.137(b)–however, it is noted that the instant petition was filed sixteen (16) months after abandonment and twelve (12) months after Notice thereof, and such delays may be deemed inconsistent with the diligence required as to patent matters.[1]

STATUTES, REGULATIONS AND ANALYSIS

Congress has authorized the Commissioner to "revive an application if the delay is shown to the satisfaction of the Commissioner to have been "unavoidable." 35 U.S.C. §133 (1994).[2]

The regulations at 37 C.F.R. §1.137(a) and (b) set forth the requirements for a petitioner to revive a previously unavoidably or unintentionally, respectively, abandoned application under this congressional grant of authority. The language of 35 U.S.C. §133 and 37 C.F.R. §1.137(a) is clear, unambiguous, and without qualification: the delay in tendering the reply to the outstanding Office action, as well as filing the first petition seeking revival, must have been unavoidable for the reply now to be accepted on petition.[3]

Delays in responding properly raise the question whether delays are unavoidable.[4] Where there is a question whether the delay was unavoidable, Petitioners must meet the burden of establishing that the delay was unavoidable within the meaning of 35 U.S.C. §133 and 37 C.F.R. §1.137(a).[5]

---

[1] For more than a century, punctuality and due diligence, equally with good faith, have been deemed essential requisites to the success of those who seek to obtain the special privileges of the patent law, and they are demanded in the interest of the public and for the protection of rival inventors. See: Porter v. Louden, 7 App.D.C. 64 (C.A.D.C. 1895), citing Wollensak v. Sargent, 151 U.S. 221, 228, 38 L. Ed. 137, 14 S. Ct. 291 (1894). An invention benefits no one unless it is made public, and the rule of diligence should be so applied as to encourage reasonable promptness in conferring this benefit upon the public. Automatic Electric Co. v. Dyson, 52 App. D.C. 82; 281 F. 586 (C.A.D.C. 1922). Generally, 35 U.S.C. §6; 37 C.F.R.§§1.181, 182, 183.

[2] 35 U.S.C. §133 provides:
35 U.S.C. §133 Time for prosecuting application.
Upon failure of the applicant to prosecute the application within six months after any action therein, of which notice has been given or mailed to the applicant, or within such shorter time, not less than thirty days, as fixed by the Commissioner in such action, the application shall be regarded as abandoned by the parties thereto, unless it be shown to the satisfaction of the Commissioner that such delay was unavoidable.

[3] Therefore, by example, an unavoidable delay in the payment of the Filing Fee might occur if a reply is shipped by the US Postal Service, but due to catastrophic accident, the delivery is not made.

[4] See: *Changes to Patent Practice and Procedure*; *Final Rule Notice*, 62 *Fed. Reg.* at 53158-59 (October 10, 1997), 1203 *Off. Gaz. Pat. Office* at 86-87 (October 21, 1997).

[5] See: In re Application of G, 11 USPQ2d 1378, 1380 (Comm'r Pats. 1989).

And the Petitioner must be diligent in attending to the matter.[6] Failure to do so does not constitute the care required under Pratt, and so cannot satisfy the test for diligence and due care.

(By contrast, unintentional delays are those that do not satisfy the very strict statutory and regulatory requirements of unavoidable delay, and also, by definition, are not intentional.[7]))

Allegations as to
Unintentional Delay

The requirements for relief under the provisions of 37 C.F.R. §1.137(b) are: petition, fee, reply, showing of unintentional delay, and–where appropriate–a terminal disclaimer and fee.

The record (including the petition filed on 13 March, 2006) does not necessitate a finding that the delay between midnight 12 November, 2004 (date of abandonment), and 13 March, 2006 (date of filing of grantable petition), was not unintentional.

Rather, the Patent and Trademark Office is relying in this matter on the duty of candor and good faith of Applicant (Swett) and Counsel/Petitioner (Stephen T. Sullivan (Reg. No. 32,444)) when accepting Petitioner's representation that the delay in filing the response was unintentional.[8]

It appears that Petitioner has satisfied the requirements of the regulation.

CONCLUSION

Because Petitioner appears to have satisfied the regulatory requirements, regulation, the petition under 37 C.F.R. §1.137(b) is **granted**.

The application is released to the Examiner in Technology Center 2800 for further processing in due course.

---

[6] See: Diligence in Filing Petitions to Revive and Petitions to Withdraw the Holding of Abandonment, 1124 Off. Gaz. Pat. Office 33 (March 19, 1991). It was and is Petitioner's burden to exercise diligence in seeking either to have the holding of abandonment withdrawn or the application revived. See 1124 Off. Gaz. Pat. Office supra.

[7] Therefore, by example, an unintentional delay in the reply might occur if the reply and transmittal form are to be prepared for shipment by the US Postal Service, but other pressing matters distract one's attention and the mail is not timely deposited for shipment.

[8] See Changes to Patent Practice and Procedure, 62 Fed. Reg. at 53160 and 53178, 1203 Off. Gaz. Pat. Office at 88 and 103 (responses to comments 64 and 109)(applicant obligated under 37 C.F.R. §10.18 to inquire into the underlying facts and circumstances when providing the statement required by 37 C.F.R. §1.137(b) to the Patent and Trademark Office).

Telephone inquiries concerning this decision may be directed to the undersigned at (571) 272-3214.

John J. Gillon, Jr.
Senior Attorney
Office of Petitions

UNITED STATES PATENT AND TRADEMARK OFFICE

COMMISSIONER FOR PATENTS
UNITED STATES PATENT AND TRADEMARK OFFICE
P.O. BOX 1450
ALEXANDRIA, VA 22313-1450
www.uspto.gov

Fogg and Associates, LLC
P. O. Box 581339
Minneapolis, MN 55458-1339

COPY MAILED
JAN 28 2005
OFFICE OF PETITIONS

In re Application of	:	
Jean-Francois Cliché	:	
Application No. 10/391,483	:	ON PETITION
Filed: March 18, 2003	:	
Attorney Docket No. 143.004US01	:	

This is a decision on the petition under 37 CFR 1.137(b), filed November 1, 2004, to revive the above-identified application.

The petition is **GRANTED**.

37 CFR 1.137(b)(3) requires a statement that the entire delay in filing the required reply from the due date for the reply until the filing of a grantable petition pursuant to 37 CFR 1.137(b) was unintentional. Since the statement contained in the instant petition varies from the language required by 37 CFR 1.137(b)(3), the statement is being construed as the statement required by 37 CFR 1.137(b)(3) and petitioner must notify the Office if this is **not** a correct interpretation of the statement contained in the instant petition.

Telephone inquiries concerning this decision should be directed to the undersigned at (571) 272-3223.

The application file is being referred to the Publishing Division to be processed into a patent.

Marianne E. Jenkins
Petitions Examiner
Office of Petitions
Office of the Deputy Commissioner
for Patent Examination Policy

UNITED STATES PATENT AND TRADEMARK OFFICE

Commissioner for Patents
United States Patent and Trademark Office
P.O. Box 1450
Alexandria, VA 22313-1450
www.uspto.gov

Paper No. 081604

DAVID NEWMAN CHARTERED
CENTENNIAL SQUARE
P.O. BOX 2728
LA PLATA, MD 20646-2728

DEC 28 2004

In re Application of:	:	
DONALD L. SCHILLING *et al.*	:	
Serial No.: 10/391,485	:	DECISION ON REQUEST TO WITHDRAW
Filed: March 18, 2003	:	FROM RECORD
Attorney Docket No.: **IVS104US**	:	

This is a decision on the request to withdraw as attorney/agent of record under 37 C.F.R. § 1.36, filed February 11, 2004 and May 17, 2004.

A grantable request to withdraw as attorney of record must be signed by every attorney seeking to withdraw or contain a clear indication that one attorney is signing on behalf of others. A request to withdraw will not be approved unless at least thirty (30) days would remain between the date of approval and the later of the expiration date of a time to file a response or the expiration date of the maximum time period, which can be extended under 37 C.F.R. § 1.136(a).

The request meets all the above stated requirements. The request was signed by David B. Newman, Jr., on behalf of himself and all the attorneys/agents of record. There is no outstanding Office action at this time.

The request is **APPROVED**.

All future communications from the Office will be directed to John Gabrysiak, at the below address, until otherwise notified by applicant.

Inquiries related to this decision should be directed to Edward Westin at (571) 272-1638.

Edward Westin

Edward Westin, Special Programs Examiner
Technology Center 2800
Semiconductors, Electrical and Optical
Systems and Components

cc: JOHN GABRYSIAK
ORLOVSKY, MOODY, SCHAAFF & GABRYSIAK
187 HIGHWAY 36
WEST LONG BRANCH, NJ 07764

UNITED STATES PATENT AND TRADEMARK OFFICE

COMMISSIONER FOR PATENTS
UNITED STATES PATENT AND TRADEMARK OFFICE
P.O. BOX 1450
ALEXANDRIA, VA 22313-1450
www.uspto.gov

Paper No. 7

SNELL & WILMER
ONE ARIZONA CENTER
400 EAST VAN BUREN
PHOENIX AZ 85004-0001

COPY MAILED

OCT 22 2003

OFFICE OF PETITIONS

In re Application of
Royer et al.
Application No. 10/391,492
Filed: March 18, 2003
Attorney Docket No. 50655.0500

DECISION DISMISSING PETITION

This is a decision on the petition filed August 13, 2003 (certificate of mailing August 11, 2003), requesting that the above-identified application be accorded a filing date of March 18, 2003, with Figures 13-17 as part of the original disclosure.

On March 18, 2003, applicants filed the above-identified application. On June 9, 2003, the Office mailed a "Notice to File Missing Parts of Nonprovisional Application" (Notice), requiring applicants to submit the statutory basic filing fee, an oath or declaration with the signatures of the inventors, and a surcharge for their late filing. Additionally, the Notice stated that the application was accorded a filing date of March 18, 2003; however, it appeared that Figures 13-17 described in the specification were omitted.

In response, on August 13, 2003 (certificate of mailing August 11, 2003), applicants filed, inter alia, the present petition, an authorization to charge the petition fee, and copies of 5 sheets of drawings consisting of Figures 13-17.

Applicants stated "that the omitted items were fully described essentially verbatim by the Written Description (see Paragraphs 0150-0163) filed on March 18, 2003 and thus the application is entitled to the original filing date of March 18, 2003." *Petition dated August 13, 2003, p. 6.* Applicants further stated: "No new matter is added by Figures 13-17, and as stated above, Figures 13-17 are described essentially verbatim by the originally filed specification." *Id.*

Upon review of the record, the 5 sheets of drawings, consisting of Figures 13-17 have not been located in the official file. It is noted that the specification specifically incorporated by reference the disclosure of Application No. 09/537,506, filed March 29, 2000. Section 201.06(c) of the Manual of Patent Examining Procedure states that:

> . . . an applicant may incorporate by reference the prior application by including, in the application-as-filed, a statement that such specifically enumerated prior

> application or applications are "hereby incorporated herein by reference." The statement may appear in the specification or in the application transmittal letter. The inclusion of this incorporation by reference of the prior application(s) will permit an applicant to amend the continuing application to include any subject matter in such prior application(s), without the need for a petition. (emphasis supplied).

Obviously, in view of the incorporation by reference of Application No. 09/537,506, the drawings of Figures 13-17 are not new matter if they were a part of the disclosure of Application No. 09/537,506. If applicants desire that Figures 13-17 be added to the application, an amendment should be filed prior to the first action on the merits, which will be considered by the primary examiner.

Accordingly, the Notice mailed on June 9, 2003, was correct in stating that Figures 13-17 described in the specification appeared to have been omitted. Therefore, the requirement for the omitted figures was proper and will not be withdrawn.

Accordingly, the petition is dismissed.

The $130.00 petition fee will be charged to Deposit Account No. 19-2814 because the petition was not necessitated by any error on the part of the United States Patent and Trademark Office.

The application is being returned to the Office of Initial Patent Examination for further processing with a filing date of March 18, 2003, using the application papers filed on that date. Figures 13-17 will not be entered at this time.

Any inquiries related to this decision should be directed to the undersigned at (703) 306-5589.

Christina Tartera Donnell

Christina Tartera Donnell
Senior Petitions Attorney
Office of Petitions

UNITED STATES PATENT AND TRADEMARK OFFICE

COMMISSIONER FOR PATENTS
UNITED STATES PATENT AND TRADEMARK OFFICE
P.O. BOX 1450
ALEXANDRIA, VA 22313-1450
www.uspto.gov

Paper No. 5

SNELL & WILMER
ONE ARIZONA CENTER
400 EAST VAN BUREN
PHOENIX, AZ 85004-2201

COPY MAILED

OCT 1 7 2003

OFFICE OF PETITIONS

ON PETITION

In re Application of :
Coby Royer et al :
Application No. 10/391,492 :
Filed: March 18, 2003 :
Attorney Docket No. 50655.0500 :

This is in response to the petition under 37 CFR 1.47(a), filed August 13, 2003.

The petition is dismissed.

Rule 47 applicant is given TWO MONTHS from the mailing date of this decision to reply, correcting the below-noted deficiencies. Any reply should be entitled "Request for Reconsideration of Petition Under 37 CFR 1.47(a)," and should only address the deficiencies noted below, except that the reply may include an oath or declaration executed by the non-signing inventor. **FAILURE TO RESPOND WILL RESULT IN ABANDONMENT OF THE APPLICATION.** Any extensions of time will be governed by 37 CFR 1.136(a).

A grantable petition under 37 CFR 1.47(a) requires: (1) proof that the non-signing inventor cannot be reached or refuses to sign the oath or declaration after having been presented with the application papers (specification, claims and drawings); (2) an acceptable oath or declaration in compliance with 35 U.S.C. §§ 115 and 116; (3) the petition fee; and (4) a statement of the last known address of the non-signing inventor. Applicant lacks items (2) set forth above.

As to item (2) the declaration submitted with the petition is not in compliance with 37 CFR 1.63 and 1.64. The declaration fails to set forth the citizenship of joint inventors Judith Continelli and Sandra W. Hazeltine. Accordingly, a declaration in compliance with 37 CFR 1.63 and 1.64 signed by the signing inventor on behalf of himself and the non-signing inventors is required. Note MPEP 409.03(a); MPEP 602, and MPEP 605.01.

In order to expedite consideration of the petition under 37 CFR 1.47(a), petitioner may wish to submit the renewed petition by facsimile transmission to the telephone number indicated below and to the attention of Irvin Dingle.

Further correspondence with respect to this matter should be addressed as follows:

By mail: Mail Stop PETITION
Commissioner for Patents
Post Office Box 1450
Alexandria, VA 22313-1450

By hand: Crystal Plaza Four, Suite 3C23
2201 S. Clark Place
Arlington, VA 22202

By Fax: (703) 308-6916
ATTN: Office of Petitions

Telephone inquiries related to this decision should be directed to Irvin Dingle at (703) 306-5684.

Frances Hicks

Frances Hicks
Lead Petitions Examiner
Office of Petitions
Office of the Deputy Commissioner
for Patent Examination Policy

UNITED STATES PATENT AND TRADEMARK OFFICE

Commissioner for Patents
United States Patent and Trademark Office
P.O. Box 1450
Alexandria, VA 22313-1450
www.uspto.gov

SNELL & WILMER L.L.P. (AMEX)
ONE ARIZONA CENTER
400 E. VAN BUREN STREET
PHOENIX, AZ 85004-2202

MAILED

APR 20 2010

OFFICE OF PETITIONS

In re Application of	:	
Coby Royer et al	:	DECISION GRANTING STATUS
Application No. 10/391,492	:	UNDER 37 CFR 1.47(a) AND UNDER
Filed: March 18, 2003	:	UNDER 37 CFR 1.181
Attorney Docket No. 50655.0500	:	

This is a decision on the renewed petition filed December 17, 2003 and resubmitted March 25, 2010, requesting reconsideration of a decision mailed October 17, 2003, which refused to accord 37 CFR 1.47(a) status to the above-identified application. This is also a decision under 37 CFR 1.181 to establish the filing date of the request for reconsideration to December 17, 2003.

The petition under 37 CFR 1.47(a) is **GRANTED.**

Petitioner has shown that the non-signing inventors (Judith Continelli and Sandra Hazeltine) have refused to join in the filing of the above-identified application.

The application and papers have been reviewed and found in compliance with 37 CFR 1.47(a). This application is hereby accorded Rule 1.47(a) status.

As provided in 37 CFR 1.47(c), this Office will forward notice of this application's filing to the non-signing inventor at the address given in the petition. Notice of the filing of this application will also be published in the Official Gazette.

The petition under 37 CFR 1.181 is **GRANTED.**

Petitioner has provided the certificate of facsimile pursuant to 37 CFR §1.8 which bears a transmitted date of December 17, 2003. Therefore, the Office has accepted the filing date of the request for reconsideration to December 17, 2003. A copy of the previously correspondence was filed with this petition.

This application is being referred to the Office of Patent Application Processing. Telephone inquiries regarding this decision should be directed to Irvin Dingle at (571) 272-3210.

/dab/
David Bucci
Petitions Examiner
Office of Petitions

UNITED STATES PATENT AND TRADEMARK OFFICE

Commissioner for Patents
United States Patent and Trademark Office
P.O. Box 1450
Alexandria, VA 22313-1450
www.uspto.gov

MAILED

APR 20 2010

OFFICE OF PETITIONS

Judith Continelli
5620 W. Tonopah Drive
Glendale, AZ 85308

In re Application of
Coby Royer; Judith Continelli; Sandra Hazeltine
Application No. 10/391,492
Filed: March 18, 2003
For: SYSTEM AND METHOD FOR FACILITATING THE HANDLING OF A DISPUTE USING DISPARATE ARCHITECTURES

Dear Ms. Continelli:

You are named as a joint inventor in the above identified United States patent application, filed under the provisions of 35 U.S.C. 116 (United States Code), and 37 CFR 1.47(a), Rules of Practice in Patent Cases. Should a patent be granted on the application you will be designated therein as a joint inventor.

As a named inventor you are entitled to inspect any paper in the file wrapper of the application, order copies of all or any part thereof (at a prepaid cost per 37 CFR 1.19) or make your position of record in the application. Alternatively, you may arrange to do any of the preceding through a registered patent attorney or agent presenting written authorization from you. If you care to join in the application, counsel of record (see below) would presumably assist you. Joining in the application would entail the filing of an appropriate oath or declaration by you pursuant to 37 CFR 1.63.

Telephone inquiries regarding this communication should be directed to the Irvin Dingle at (571) 272-3210. Requests for information regarding your application should be directed to the File Information Unit at (703) 308-2733. Information regarding how to pay for and order a copy of the application, or a specific paper in the application, should be directed to Certification Division at (571) 272-3150 or 1 (800) 972-6382 (outside the Washington D.C. area).

/dab/
David Bucci
Petitions Examiner
Office of Petitions

cc: Snell & Wilmer L.L.P. (Amex)
One Arizona Center
400 E. Van Buren Street
Phoenix, AZ 85004-2202

UNITED STATES PATENT AND TRADEMARK OFFICE

Commissioner for Patents
United States Patent and Trademark Office
P.O. Box 1450
Alexandria, VA 22313-1450
www.uspto.gov

MAILED

APR 20 2010

OFFICE OF PETITIONS

Sandra W. Hazeltine
1115 E. Shangri La Road
Phoenix, AZ 85020

In re Application of
Coby Royer; Judith Continelli; Sandra Hazeltine
Application No. 10/391,492
Filed: March 18, 2003
For: SYSTEM AND METHOD FOR FACILITATING THE HANDLING OF A DISPUTE USING DISPARATE ARCHITECTURES

Dear Ms. Hazeltine:

You are named as a joint inventor in the above identified United States patent application, filed under the provisions of 35 U.S.C. 116 (United States Code), and 37 CFR 1.47(a), Rules of Practice in Patent Cases. Should a patent be granted on the application you will be designated therein as a joint inventor.

As a named inventor you are entitled to inspect any paper in the file wrapper of the application, order copies of all or any part thereof (at a prepaid cost per 37 CFR 1.19) or make your position of record in the application. Alternatively, you may arrange to do any of the preceding through a registered patent attorney or agent presenting written authorization from you. If you care to join in the application, counsel of record (see below) would presumably assist you. Joining in the application would entail the filing of an appropriate oath or declaration by you pursuant to 37 CFR 1.63.

Telephone inquiries regarding this communication should be directed to the Irvin Dingle at (571) 272-3210. Requests for information regarding your application should be directed to the File Information Unit at (703) 308-2733. Information regarding how to pay for and order a copy of the application, or a specific paper in the application, should be directed to Certification Division at (571) 272-3150 or 1 (800) 972-6382 (outside the Washington D.C. area).

/s/
David Bucci
Petitions Examiner
Office of Petitions

cc: Snell & Wilmer L.L.P. (Amex)
One Arizona Center
400 E. Van Buren Street
Phoenix, AZ 85004-2202

UNITED STATES PATENT AND TRADEMARK OFFICE

Commissioner for Patents
United States Patent and Trademark Office
P.O. Box 1450
Alexandria, VA 22313-1450
www.uspto.gov

Paper No. 102104

STRATEGIC PATENT SERVICES, INC.
1096 TRESTLE GLEN
OAKLAND, CA 94610

APR - 5 2005

In re Application of:	:	
AUSTIN et al.	:	
Serial No.: 10/391,510	:	DECISION ON REQUEST TO WITHDRAW
Filed: March 17, 2003	:	FROM RECORD
Attorney Docket No.: **SPS-05**	:	

This is a decision on the request to withdraw as attorney/agent of record under 37 C.F.R. § 1.36, filed October 05, 2004.

A grantable request to withdraw as attorney of record must be signed by every attorney seeking to withdraw or contain a clear indication that one attorney is signing on behalf of others. A request to withdraw will not be approved unless at least thirty (30) days would remain between the date of approval and the later of the expiration date of a time to file a response or the expiration date of the maximum time period, which can be extended under 37 C.F.R. § 1.136(a).

The request meets all the above stated requirements. The request was signed by Gary Zalewski, on behalf of himself and all the attorneys/agents of record. There is no outstanding Office action at this time.

The request is **APPROVED**.

There are no attorneys/agents of record at this time.

All future communications from the Office will be directed to the assignee, Tom Conneely, at the below address, until otherwise notified by applicant.

Inquiries related to this decision should be directed to Jose G. Dees at (571) 272-1569.

Jose G. Dees, Special Programs Examiner
Technology Center 2800
Semiconductors, Electrical and Optical
Systems and Components

cc: TOM CONNEELY
LIGHTHOUSE CAPITAL PARTNERS
500 DRAKES LANDING ROAD
GREENBREA, CA 94904

UNITED STATES PATENT AND TRADEMARK OFFICE

Commissioner for Patents
United States Patent and Trademark Office
P.O. Box 1450
Alexandria, VA 22313-1450
www.uspto.gov

STEVEN J. ADAMSON, PC
P.O. BOX 5997
PORTLAND, OR 97228

COPY MAILED

FEB 0 4 2009

OFFICE OF PETITIONS

In re Application of
Tod A. **HILDSTAD, et al.**
Application No. 10/391,517
Filed: March 17, 2003
Attorney Docket No. **FID002**

DECISION ON PETITION
UNDER 37 CFR 1.137(b)

This is a decision on the petition under the unintentional provisions of 37 CFR 1.137(b), filed July 30, 2007, to revive the above-identified application.

The petition is **DISMISSED**.

The application became abandoned for failure to timely pay the issue/publication fees and submitted corrected drawings on or before April 18, 2007, as required by the Notice of Allowance/Allowability, mailed January 18, 2007, which set a statutory period for reply of three (3) months. Accordingly, the application became abandoned on April 19, 2007.

A grantable petition under 37 CFR 1.137(b) must be accompanied by: (1) the required reply, unless previously filed; (2) the petition fee as set forth in 37 CFR 1.17(m); (3) a statement that the entire delay in filing the required reply from the due date for the reply until the filing of a grantable petition pursuant to 37 CFR 1.137(b) was unintentional; and (4) any terminal disclaimer (and fee as set forth in 37 CFR 1.20(d)) required by 37 CFR 1.137(d). Where there is a question as to whether either the abandonment or the delay in filing a petition under 37 CFR 1.137 was unintentional, the Director may require additional information. See MPEP 711.03(c)(II)(C) and (D). The instant petition lacks item (1) the proper reply (corrected drawings in compliance with 37 CFR 1.84(c) and 37 CFR 1.121(d)).

The corrected drawings submitted on May 17, 2007 are not approved because the identifying indicia (such as the application number and "Replacement Sheet") were omitted.

Any request for reconsideration of this decision must be submitted within TWO (2) MONTHS from the mail date of this decision. Extensions of time under 37 CFR 1.136(a) are permitted. The reconsideration request should include a cover letter entitled

"Renewed Petition under 37 CFR 1.137(b)." This is **not** a final agency action within the meaning of 5 U.S.C. § 704.

Further correspondence with respect to this matter should be addressed as follows:

By Mail: Mail Stop PETITION
Commissioner for Patents
P. O. Box 1450
Alexandria, VA 22313-1450

By hand: U. S. Patent and Trademark Office
Customer Service Window, Mail Stop Petitions
Randolph Building
401 Dulany Street
Alexandria, VA 22314

The centralized facsimile number is **(571) 273-8300.**

Telephone inquiries concerning this decision should be directed to Monica A. Graves at (571) 272-7253.

Brian W. Brown
Petitions Examiner
Office of Petitions

UNITED STATES PATENT AND TRADEMARK OFFICE

Commissioner for Patents
United States Patent and Trademark Office
P.O. Box 1450
Alexandria, VA 22313-1450
www.uspto.gov

STEVEN J. ADAMSON, PC
P.O. BOX 5997
PORTLAND, OR 97228

MAILED

AUG 17 2009

OFFICE OF PETITIONS

In re Application of	:	
Tod A. HILDSTAD, et al.	:	
Application No. 10/391,517	:	DECISION ON PETITION
Filed: March 17, 2003	:	UNDER 37 CFR 1.137(b)
Attorney Docket No. **FID002**	:	

This is a decision on the renewed petition under the unintentional provisions of 37 CFR 1.137(b), filed June 9, 2009, to revive the above-identified application.

The petition is **GRANTED**.

This application became abandoned for failure to timely pay the issue/publication fees and submit corrected drawings on or before April 18, 2007, as required by the Notices of Allowance/Allowability, mailed January 18, 2007. Accordingly, the date of abandonment of this application is April 19, 2007.

The petition satisfies the requirements of 37 CFR 1.137(b) in that petitioner has supplied (1) the reply in the form of payment of the issue fee of $700, the publication fee of $300, and corrected drawing(s); (2) the petition fee of $750; and (3) an adequate statement of unintentional delay.

Telephone inquiries concerning this decision should be directed to Monica A. Graves at (571) 272-7253.

This application is being referred to the Office of Data Management for processing into a patent.

Brian W. Brown
Petitions Examiner
Office of Petitions

UNITED STATES PATENT AND TRADEMARK OFFICE

Commissioner for Patents
United States Patent and Trademark Office
P.O. Box 1450
Alexandria, VA 22313-1450
www.uspto.gov

MAY - 3 2005

In re Application of FROMME ET AL.
Appl. No.: 10/391,519
Filed: March 18, 2003
For: INDUSTRIAL TRUCK WITH INTEGRATED VEHICLE CONTRL AND BATTERY CHARGING SYSTEM

WITHDRAWAL FROM ISSUE
37 CFR 1.313

The purpose of this communication is to inform you that the above-identified application is being withdrawn from issue after payment of the issue fee due to the unpatentability of one or more claims. See 37 CFR 1.313.

The issue fee and publication fee are refundable upon request. The applicant may request a refund, or may request that the fees be credited to a deposit account. However, applicant may wait until the application is either again found allowable or held abandoned. If the application is allowed, upon receipt of a new Notice of Allowance and Issue and Publication Fee Due, applicant may request that the previously submitted issue fee and publication fee be applied toward payment of the issue fee and publication fee in the amount identified on the new Notice of Allowance and Issue and Publication Fee Due. If the application is abandoned, applicant may request either a refund or a credit to a specified Deposit Account.

The application is being forwarded to the examiner for action.

Richard K. Seidel
Director
Patent Examining Technology Center 2800

THE WEBB LAW FIRM, P.C.
700 KOPPERS BUILDING
436 SEVENTH AVENUE
PITTSBURGH, PA 15219

26 JAN. 2004

UNITED STATES PATENT AND TRADEMARK OFFICE

COMMISSIONER FOR PATENTS
UNITED STATES PATENT AND TRADEMARK OFFICE
P.O. BOX 1450
ALEXANDRIA, VA 22313-1450
www.uspto.gov

MICHAEL N. HAYNES
1341 HUNTERSFIELD CLOSE
KESWICK, VA 22947

In re Application of SURBEY et al. Application No.: 10/391,533 Filing Date: 18 March 2003 Attorney's Docket No.: 1004-004 For: METHOD AND SYSTEM FOR AUTOMATING INSURANCE PROCESSES	DECISION ON PETITION 37 CFR 1. 182

This is a decision in response to applicant's petition entitled "Petition", treated as a petition under 37 CFR 1.182, and filed in the United States Patent and Trademark Office (USPTO) on 17 September 2003. The petition requests that the above referenced application be converted from a application filed under 35 U.S.C. 111(a) to an application filed under 35 U.S.C. 371. The $130.00 petition fee was paid.

BACKGROUND

On 24 September 2001, applicant filed international application PCT/US01/29767, which claimed priority of an earlier US application filed 22 September 2000.

A Demand was filed with the International Preliminary Examining Authority electing the United States. As a result, the deadline for payment of the basic national fee was to expire 30 months from the priority date, or on 22 March 2003.

On 18 March 2003, applicant filed a "Utility Patent Application Transmittal" letter (Form PTO/SB/05) filing the international application in United States as a utility application under 37 CFR 1.53(b). The transmittal letter was accompanied by, *inter alia*, the utility filing fee of $375 and a declaration executed by the inventors. The transmittal letter did not expressly request commencement of the national procedures under 35 U.S.C. 371(f).

On 17 September 2003, applicant filed the present petition, requesting that the patent application, filed under 35 U.S.C. 111(a), be converted to an national stage application filed under 35 U.S.C. 371.

DISCUSSION

Any intended filing of an international application as a national stage application must clearly and unambiguously be identified as such and must satisfy all of the conditions set forth in 35 U.S.C. 371(c). *See* MPEP 1893.03(a). The official PTO Notice published in the Official Gazette at 1077 OG 13 entitled "Minimum Requirements for Acceptance of Applications Under 35 U.S.C. 371 (the National Stage of PCT)" states, in part, the following:

> The Patent and Trademark Office is continuing to receive application papers which do not clearly identify whether the papers (1) are being submitted to enter the national stage of

the Patent Cooperation Treaty (PCT) under 35 U.S.C. 371 or (2) are being filed as a regular national application under 35 U.S.C. 111.

* * *

To clearly indicate an international application is being filed under 35 U.S.C. 371 the applicant should use the "Transmittal Letter for United States Designated Office" (Form PTO-1390) as the transmittal letter.

Alternatively, one of the following indications may be used:

1) the applicant shall clearly state in the transmittal or cover letter that he or she is filing under 35 U.S.C. 371 or entering the national stage under PCT; or

2) the applicant clearly identifies in the oath or declaration the specification to which it is directed by referring to a particular international application by PCT Serial Number and International Filing Date and that he or she is executing the declaration as, and seeking a U.S. Patent as, the inventor of the described in the identified international application.

Applicants are cautioned that the identification of the international application, in the oath or declaration or otherwise, as a prior filed application for priority purposes is not considered to be an indication of an intention to file under 35 U.S.C. 371.

If there are any conflicting instructions as to which section of the statute (371 or 111) is intended the application will be accepted under 35 U.S.C. 111.

A review of the application file reveals that applicant did not use Form PTO-1390 as a transmittal letter or clearly state in the transmittal letter that they were filing under 35 U.S.C. 371 or entering the national stage under PCT. In fact, the transmittal letter filed on 18 March 2003 did not identify the application as a national stage application being filed under 35 U.S.C. 371 but was entitled "Utility Patent Application Transmittal (Only for new nonprovisional applications under 37 CFR 1.53(b))".

Since applicant's transmittal letter did not request treatment under 35 U.S.C. 371 but referenced 37 CFR 1.53(b), the application was properly treated as an application under 35 U.S.C. 111(a) (37 CFR 1.495(g)). The transmittal letter authorized applicant's credit card to be charged in the amount of $375, the filing fee for a utility application under 35 U.S.C. 111(a).

Applicant's reference to 37 CFR 1.53(b) in the transmittal letter is inconsistent with and would have contradicted any desire expressed in any papers filed to enter the national stage of the PCT under 35 U.S.C. 371. Application papers submitted under 37 CFR 1.53(b) are considered filed under 35 U.S.C. 111. Accordingly, the original papers deposited on 18 March 2003 were properly accepted as a filing under 35 U.S.C. 111. Since the application is deemed to have been filed under 35 U.S.C. 111(a), international application PCT/US01/29767 is abandoned with respect to the United States.

The basic national fee was $890. Applicant only paid $375. Applicant did not indicate that they wished to pay the basic national filing fee and did not pay the full national basic fee. Therefore, the international application became abandoned as to the United States for failure to pay the basic national fee by midnight on 22 March 2003 (35 U.S.C. 371(d) and 37 CFR 1.495(h)). Applicant paid the filing fee for a filing under 35 U.S.C. 111. Accordingly,

applicant's request to convert to 35 U.S.C. 371 filing status cannot be granted because if the application was filed under 35 U.S.C. 371, the application would be abandoned for failure to pay the basic national fee prior to 22 March 2003, the expiration of thirty months from the priority date.

Applicant is entitled to claim benefit under 35 U.S.C. 120 and 365(c) of the filing date of the international application for the common subject matter, since this application (Serial No. 10/391,533) and the international application (PCT/US01/29767) designating the United States were copending on 18 March 2003. In order to obtain benefit of the earlier international application, applicant must make reference to the previous application and state the relationship. The required reference may either be in an application data sheet or the specification must contain or be amended to contain such reference in the first sentence . An appropriate passage would be, "This is an continuation of international application PCT/US01/29767, filed 24 September 2001, which designated the United States and is now abandoned." Applicant must provide this reference within four (4) months from the date of national stage commencement. *See* 37 CFR 1.78(a)(2)(ii). *See also* MPEP §1896. Applicant may wish to file a petition in this regard.

Accordingly, applicant's request to identify the application as a 35 U.S.C. 371 filing is dismissed without prejudice.

CONCLUSION

Applicant's submission on 18 March 2003 was properly treated as an application filed under 35 U.S.C. 111(a), with a filing date of 18 March 2003. Applicant's petition to identify the application as a filing under 35 U.S.C. 371 is **DISMISSED without prejudice**.

This application is being returned to Art Unit 3626, where applicant's "Petition to Make Special" filed on 18 March 2003, will be addressed.

Cynthia M. Kratz

Cynthia M. Kratz
Attorney Advisor
PCT Legal Office

Telephone: (703) 306-5467

UNITED STATES PATENT AND TRADEMARK OFFICE

Commissioner for Patents
United States Patent and Trademark Office
P.O. Box 1450
Alexandria, VA 22313-1450
www.uspto.gov

MICHAEL N. HAYNES
1341 HUNTERSFIELD CLOSE
KESWICK, VA 22947

COPY MAILED

SEP 2 8 2005

OFFICE OF PETITIONS

In re Application of	:	
Surbey et al.	:	
Application No. 10/391,533	:	DECISION GRANTING PETITION
Filed: March 18, 2003	:	UNDER 37 CFR 1.78(a)(3)
Attorney Docket No. 1004-004	:	

This is a decision on the petition under 37 CFR 1.78(a)(3), filed July 29, 2004, to accept an unintentionally delayed claim under 35 U.S.C. §§ 120 and 365(c) for the benefit of priority to prior-filed International Application No. PCT/US01/29767, filed September 24, 2001, as set forth in the amendment filed concurrently with the instant petition.

The petition is **GRANTED**.

A petition for acceptance of a claim for late priority under 37 CFR 1.78(a)(3) is only applicable to those applications filed on or after November 29, 2000. Further, the petition is appropriate only after the expiration of the period specified in 37 CFR 1.78(a)(2)(ii). In addition, the petition under 37 CFR 1.78(a)(3) must be accompanied by:

(1) the reference required by 35 U.S.C. § 120 and 37 CFR 1.78(a)(2)(i) of the prior-filed application, unless previously submitted;
(2) the surcharge set forth in § 1.17(t); and
(3) a statement that the entire delay between the date the claim was due under 37 CFR 1.78(a)(2)(ii) and the date the claim was filed was unintentional. The Commissioner may require additional information where there is a question whether the delay was unintentional.

The instant nonprovisional application was filed after November 29, 2000, and the claim herein for the benefit of priority to the prior-filed PCT application is submitted after expiration of the period specified by 37 CFR 1.78(a)(2)(ii). Therefore, this is a proper petition under 37 CFR 1.78(a)(3).

The petition complies with the requirements for a grantable petition under 37 CFR 1.78(a)(3) in that (1) a reference to the above-noted, prior-filed PCT application has been included in an amendment to the first sentence of the specification following the title, as provided by 37 CFR 1.78(a)(2)(iii); (2) the surcharge fee required by 37 CFR 1.17(t) has been submitted; and (3) the petition contains a proper statement of unintentional delay. Accordingly, having found that the instant petition for acceptance of an unintentionally delayed claim for the benefit of priority under 35 U.S.C. §§ 120 and 365(c) to the above-noted, prior-filed PCT application satisfies the conditions of 37 CFR 1.78(a)(3), the petition is granted.

The granting of the petition to accept the delayed benefit claim to the prior-filed application under 37 CFR 1.78(a)(3) should not be construed as meaning that the instant application is entitled to the benefit of the prior-filed application. In order for the instant application to be entitled to the benefit of the prior-filed application, all other requirements under 35 U.S.C. § § 120 and 365(c) and 37 CFR 1.78(a)(1) and (a)(2) must be met. Similarly, the fact that the corrected Filing Receipt accompanying this decision on petition includes the prior-filed application should not be construed as meaning that applicant is entitled to the claim for benefit of priority to the prior-filed application noted thereon. Accordingly, the examiner will, in due course, consider this benefit claim and determine whether the instant application is entitled to the benefit of the earlier filing date.

A corrected Filing Receipt, which includes the priority claim to the prior-filed applications, was mailed on October 4, 2004.

Any inquiries concerning this decision may be directed to Paralegal Liana Chase at (571) 272-3282.

This matter is being referred to Technology Center Art Unit 3626 for appropriate action on the amendment filed July 29, 2004, including consideration by the examiner of applicant's entitlement to claim benefit of priority under 35 U.S.C. §§ 120 and 365(c) to the prior-filed PCT application.

Liana Chase
Petitions Examiner
Office of Petitions
Office of the Deputy Commissioner
for Patent Examination Policy

UNITED STATES PATENT AND TRADEMARK OFFICE

Commissioner for Patents
United States Patent and Trademark Office
P.O. Box 1450
Alexandria, VA 22313-1450
www.uspto.gov

Weingarten, Schurgin, Gagnebin & Lebovici LLP
Ten Post Office Square
Boston MA 02109

COPY MAILED

OCT 2 1 2003

OFFICE OF PETITIONS

In re Application of :
Mikkelsen, et al. :
Application No. 10/391,534 :
Filed: March 18. 2003 :
Attorney Docket No. MINT-009XX :

DECISION ON PETITION

This is a decision on the petition under 37 CFR 1.10, filed May 30, 2003, requesting that the above-identified application be accorded a filing date of March 18, 2003, rather than the presently accorded filing date of March 17, 2003.

Petitioner alleges that the application was deposited in Express Mail service on March 18, 2003. In support of the allegation, the petition is accompanied by a copy of Express Mail label No. EV044746119US. Although the date-in indicates a date of March 17, 2003, the Express Mail label contains a United States Postal Service (USPS) stamp of March 18, 2003. The same Express Mail label number was placed on the original application papers located in the official file.

In view of the above, the petition is **granted**. No petition fee is necessary.

This application file will be accorded a filing date of March 18, 2003.

Telephone inquiries should be directed to the undersigned at (703) 306-5589.

Christina Tartera Donnell

Christina Tartera Donnell
Senior Petitions Attorney
Office of Petitions

SPE RESPONSE FOR CERTIFICATE OF CORRECTION

Paper No.: _____

DATE : 11-14-06

TO SPE OF : ART UNIT 3725

SUBJECT : Request for Certificate of Correction for Appl. No.: 10/391,546 Patent No.: 7048216

Please respond to this request for a certificate of correction within 7 days.

Please review the requested changes/corrections as shown in the **COCIN** document(s) in the IFW application image. No new matter should be introduced, nor should the scope or meaning of the claims be changed.

Please Fiss.

Please complete the response (see below) and forward the completed response to scanning using document code **COCX**.

Certificates of Correction Branch

703-308-9390 ext. 117

Thank You For Your Assistance

The request for issuing the above-identified correction(s) is hereby:

Note your decision on the appropriate box.

- ☒ Approved — All changes apply.
- ☐ Approved in Part — Specify below which changes do not apply.
- ☐ Denied — State the reasons for denial below.

Comments: _____

DERRIS H. BANKS
SUPERVISORY PATENT EXAMINER
TECHNOLOGY CENTER 3700

SPE

3725
Art Unit

OIPE JC108
JUN 0 6 2005
PATENT & TRADEMARK OFFICE

Pet. Dec.

PATENT

I hereby certify that on the date specified below, this correspondence is being deposited with the United States Postal Service as first-class mail in an envelope addressed to Mail Stop Petition, Commissioner for Patents, P.O. Box 1450, Alexandria, VA 22313-1450.

May 31, 2005
Date

Phoebe E. Pogson

IN THE UNITED STATES PATENT AND TRADEMARK OFFICE

Appl. No.	: 10/391,547	Confirmation No.	: 7895
Applicants	: Karen Fleckner, Feng Zheng, Cynthia Buenviaje, Yao Huang, Jeff Pederson, David Lim, H. Sho Fuji, Jeremy Hergesheimer and Michael Treiber		
Filed	: March 17, 2003	Attorney Docket No.	: 500980.02
Art Unit	: not yet assigned	Customer No.	: 27,076
Examiner	: not yet assigned		
Title	: FUEL CELLS		

Approved
Jacqueline M. Stone, Director
Technology Center 1700
7/15/05

Mail Stop Petition
Commissioner for Patents
P.O. Box 1450
Alexandria, VA 22313-1450

REQUEST FOR WITHDRAWAL AS ATTORNEY UNDER 37 CFR § 10.40(c)

Sir:

REQUEST FOR WITHDRAWAL

In accordance with 37 C.F.R § 10.40(c), I, an attorney signing below, respectfully request permission to withdraw from all further responsibility in the above-identified application, in accordance with 37 C.F.R § 1.36

IDENTITY AND LAST KNOW ADDRESS OF CLIENT

The client in this matter is Nu Element, a corporation, whose last known address is:

2323 N 20th, #100
Tacoma, Washington 98403

BASIS FOR WITHDRAWAL REQUEST

The basis for the request for withdrawal is 37 CFR § 10.40(c)(vi), failure to pay one or more bills for an unreasonable period of time. The client has failed to pay outstanding bills since February of 2003. Since receipt of the last payment in February 2003, additional fees have been billed and a large sum (in the amount of $66,700.80) has been written off as not recoverable. Attached as Exhibit 1 is a printout of the accounting summary for this client showing a total of $28,397.06 in Accounts Receivable and the written off amount of $66,700.80.

On November 6, 2003, Mr. Steven Arterberry, an attorney of record, sent correspondence to the client via electronic mail, indicating that in order to have additional work performed the delinquent balance must be paid. No payment has been received, although in order to not prejudice our client's rights and forego extensive extension of time fees, a Response to Missing Requirements was filed in January 2004, and a Response to the outstanding Restriction Requirement is being filed concurrently with this Request.

ALLOWANCE OF TIME FOR CLIENT TO ACT

A Restriction Requirement was issued in this application on April 29, 2005. A response to this Notice is being filed with the U.S. Patent and Trademark Office concurrently with this Request.

NOTIFICATION OF CLIENT

In accordance with 37 C.F.R. § 1.40(a), a copy of this request, including attachments, is being sent to the client. A copy of the letter to the client is attached as Exhibit 2.

NUMBER OF COPIES OF REQUEST

This request is enclosed in triplicate.

SIGNED BY AUTHORIZED ATTORNEY ON BEHALF OF ALL ATTORNEYS WITHDRAWING

The undersigned attorney is signing on behalf of all attorneys associated with PTO customer number 27,076, with which this application is associated, as well as the below-listed attorneys to whom Power of Attorney was given.

EDWARD W. BULCHIS, Reg. No. 26,847; PAUL T. MEIKLEJOHN, Reg. No. 26,569; GLENN P. RICKARDS, Reg. No. 29,428; DALE C. BARR, Reg. No. 40,498; KIMTON N. ENG, Reg. No. 43,605; BRIAN C. PARK, Reg. No. 45,519; MARK W. ROBERTS, Reg No. 46,160; STEVEN H. ARTERBERRY, Reg. No. 46,314; PAUL F. RUSYN, Reg No. 42,118; JOHN P. LUTHER, Reg. No. 32,261; D.C. PETER CHU, Reg. No. 41,676; and all of the attorneys and agents associated with the firm of DORSEY & WHITNEY LLP at the time this application was filed.

CLOSING REMARKS

Should there be any questions regarding this petition, the Examiner is encouraged to contact the undersigned attorney at (206) 903-8718.

Respectfully submitted,
DORSEY & WHITNEY LLP

Kimton N. Eng
Registration No. 43,605

KNE:pep

Enclosures:
Postcard
Two (2) copies of this Request
Exhibits 1-2

1420 Fifth Avenue, Suite 3400
Seattle, WA 98101
Tel: (206) 903-8800
Fax: (206) 903-8820

h:\ip\clients\nu element\500980.02\500980.02 req to withdraw as attorney.doc

SPE: N. Patel

SPE RESPONSE FOR CERTIFICATE OF CORRECTION

Paper No.: _____

DATE : 2/28/07

TO SPE OF : ART UNIT 2879

SUBJECT : Request for Certificate of Correction for Appl. No.: 10/391,573 Patent No.: 7057336

Please respond to this request for a certificate of correction within 7 days.

Please review the requested changes/corrections as shown in the **COCIN** document(s) in the IFW application image. No new matter should be introduced, nor should the scope or meaning of the claims be changed.

Please complete the response (see below) and forward the completed response to scanning using document code **COCX**.

Lamonte M. Newsome
Certificates of Correction Branch
703-308-9390 ext. 112

Thank You For Your Assistance

The request for issuing the above-identified correction(s) is hereby:
Note your decision on the appropriate box.

- ☑ **Approved** — **All** changes apply.
- ☐ **Approved in Part** — Specify below which changes **do not** apply.
- ☐ **Denied** — State the reasons for denial below.

Comments: Changes approved – [illegible]

[signature] 2879

SPE **Art Unit**

Pet. Dec.

UNITED STATES PATENT and TRADEMARK OFFICE
UNDER SECRETARY OF COMMERCE FOR INTELLECTUAL PROPERTY AND
DIRECTOR OF THE UNITED STATES PATENT AND TRADEMARK OFFICE
WASHINGTON, D.C. 20231
WWW.USPTO.GOV

Mailed: 3/14/05

MEB
Paper Number

In re application of :
Koichi Kawamoto, et. al :
Serial No. 10/391,581 : DECISION ON
Filed: March 20, 2003 : PETITION
For: Fuel Reforming Apparatus
For Polymer Electrolyte
Membrane Fuel Cell :

This is a decision from the applicants' PETITION filed on April 2, 2004. This PETITION is being treated as a PETITION UNDER 37 CFR 1.181(a)(3) REQUESTING THAT THE EXAMINER CONSIDER PETITIONER'S INFORMATION DISCLOSURE STATEMENT submitted on March 20, 2003.

The petitioners filed an Information Disclosure Statement on March 20, 2003. Petitioners certified that the information contained in the Information Disclosure Statement was cited in a search report from a foreign patent office in a counterpart foreign application. The petitioners indicated that the non-English references were not considered on the PTO-1449 because a concise explanation of their relevance was not provided.

DECISION

A review of the petitioner's request and the application record indicates that the request can be granted.

37 CFR 1.98 Content of information disclosure statement requires:

A (3) Concise Explanation of Relevance for Non-English Language Information
Each information disclosure statement must further include a concise explanation of the relevance, as it is presently understood by the individual designated in 37 CFR 1.56(c) most knowledgeable about the content of the information listed that is not in the English language. The concise explanation may be either separate from the specification or incorporated therein with the page(s) and lines of the specification where it is incorporated being noted in the IDS.
The requirement for a concise explanation of relevance is limited to information that is not in the English language. The explanation required is limited to the relevance as understood by the individual designated in 37 CFR 1.56(c) most knowledgeable about the content of the information at the time the information is submitted to the Office. If a complete translation of the information into English is submitted with the non-English language information, no concise explanation is required. An English-language equivalent application may be submitted to fulfill this requirement if it is, in fact, a translation of a for-eign language application being listed in an information disclosure statement. There is no requirement for the translation to be verified. Submission of an English language

abstract of a reference may fulfill the requirement for a concise explanation. Where the information listed is not in the English language, but was cited in a search report or other action by a foreign patent office in a counterpart foreign application, the requirement for a concise explanation of relevance can be satisfied by submitting an English-language version of the search report or action which indicates the degree of relevance found by the foreign office. This may be an explanation of which portion of the reference is particularly relevant, to which claims it applies, or merely an "X", "Y", or "A" indication on a search report. The requirement for a concise explanation of non-English language information would not be satisfied by a statement that a reference was cited in the prosecution of a United States application which is not relied on under 35 U.S.C. 120.

Evidence provided by the petitioner shows compliance under 37 CFR 1.98 (a)(3). The petitioner provided a concise explanation of the relevancy of a portion of the non-English references in the specification and the remainder of the non-English references were cited on the search report for the parent PCT application. Therefore, the petition is **granted.** The application is being forwarded to the examiner for consideration of the Information Disclosure Statement filed by the petitioner.

JMStone

Jacqueline Stone, Director
Technology Center 1700
Chemical and Materials Engineering

Eckhard H. Kuesters
Oblon, Spivak, McClelland, Maier & Neustadt, P.C.
1940 DUKE STREET
ALEXANDRIA, VA 22314

SPE RESPONSE FOR CERTIFICATE OF CORRECTION

Paper No.: _____

DATE : 11-14-06

TO SPE OF : ART UNIT 3725

SUBJECT : Request for Certificate of Correction for Appl. No.: 10/391,546 Patent No.: 7048216

Please respond to this request for a certificate of correction within 7 days.

Please review the requested changes/corrections as shown in the **COCIN** document(s) in the IFW application image. No new matter should be introduced, nor should the scope or meaning of the claims be changed.

Please Figs.

Please complete the response (see below) and forward the completed response to scanning using document code **COCX**.

Certificates of Correction Branch

703-308-9390 ext. 117

Thank You For Your Assistance

The request for issuing the above-identified correction(s) is hereby:

Note your decision on the appropriate box.

- ☒ **Approved** — All changes apply.
- ☐ **Approved in Part** — Specify below which changes do not apply.
- ☐ **Denied** — State the reasons for denial below.

Comments: _____

/Dana Ross/ 3725

Dana Ross

SPE Art Unit

SPE RESPONSE FOR CERTIFICATE OF CORRECTION

DATE : 2-1-07 **Paper No.:** _____

TO SPE OF : ART UNIT 3725 - JASON PAHNG

SUBJECT : Request for Certificate of Correction on Patent No.: 7066418

A response is requested with respect to the accompanying request for a certificate of correction.

Please complete this form and return with file, within **7** days to:
Palm location **7580; Certificates of Correction Branch – South Tower – 9A22**
If response is for an IFW, **return to employee (named below) via PUBSCofC Team in MADRAS.**
With respect to the change(s) requested, correcting Office and/or Applicant's errors, should the patent read as shown in the certificate of correction (COCIN)? No new matter should be introduced, nor should the scope or meaning of the claims be changed.

Thank You For Your Assistance

ROCHAUN JOHNSON
Certificates of Correction Branch
Tel. No. 703-308-9390 EXT 119

Should the patent be Reprinted?

The request for issuing the above-identified correction(s) is hereby:
Note your decision on the appropriate box.

- ☑ **Approved** — **All** changes apply.
- ☐ **Approved in Part** — Specify below which changes **do not** apply.
- ☐ **Denied** — State the reasons for denial below.

Comments:

DERRIS H. BANKS
SUPERVISORY PATENT EXAMINER
TECHNOLOGY CENTER 3700

SPE

3725
Art Unit

SPE RESPONSE FOR CERTIFICATE OF CORRECTION

Paper No.: _____

DATE : 11-14-06

TO SPE OF : ART UNIT 3725

SUBJECT : Request for Certificate of Correction for Appl. No.: 10/391,546 Patent No.: 7048216

Please respond to this request for a certificate of correction within 7 days.

Please review the requested changes/corrections as shown in the **COCIN** document(s) in the IFW application image. No new matter should be introduced, nor should the scope or meaning of the claims be changed.

Please Figs.

Please complete the response (see below) and forward the completed response to scanning using document code **COCX**.

Certificates of Correction Branch

703-308-9390 ext. 117

Thank You For Your Assistance

The request for issuing the above-identified correction(s) is hereby:

Note your decision on the appropriate box.

- ☒ **Approved** — All changes apply.
- ☐ **Approved in Part** — Specify below which changes do not apply.
- ☐ **Denied** — State the reasons for denial below.

Comments: _____

DERRIS H. BANKS
SUPERVISORY PATENT EXAMINER
TECHNOLOGY CENTER 3700

SPE

3725
Art Unit

SPE RESPONSE FOR CERTIFICATE OF CORRECTION

Paper No.:20090804

DATE : August 04, 2009

TO SPE OF : ART UNIT 2617

SUBJECT : Request for Certificate of Correction on Patent No.: 7,469,141

A response is requested with respect to the accompanying request for a certificate of correction.

Please complete this form and return with file, within **7** days to:
Certificates of Correction Branch - ST (South Tower) 9A22
Palm location **7590** - Tel. No. (703) 305-8309

With respect to the change(s) requested, correcting Office and/or Applicant's errors, should the patent read as shown in the certificate of correction? No new matter should be introduced, nor should the scope or meaning of the claims be changed.

Thank You For Your Assistance **Certificates of Correction Branch**

The request for issuing the above-identified correction(s) is hereby:

Note your decision on the appropriated box.

☐ **Approved** All changes apply.

☐ **Approved in Part** Specify below which changes **do not** apply.

☒ **Denied** State the reasons for denial below.

Comments:

Applicant's request is in error. Requested corrections includes language not in the issued Patent, e.g., "on" not found between "filed Aug. 9, 1999", in addition, requested correction would create duplication and result in incorrect information. An international application that would claim priority from an International application which happens to be the same application.

/NICK CORSARO/
Supervisory Patent Examiner.Art Unit 2617

UNITED STATES PATENT AND TRADEMARK OFFICE

Commissioner for Patents
United States Patent and Trademark Office
P.O. Box 1450
Alexandria, VA 22313-1450
www.uspto.gov

November 9, 2009

Christopher R. Glembocki
Banner & Witcoff, Ltd.
1100 13th Street, NW
Suite 1200
Washington, DC 20005-4051

Patent No: 7,469,141 B2
Application No: 10/391,598
Applicant: Philip Marcridis, et al.
Issued: December 23, 2008
Title: **BANDWIDTH ALLOCATION METHOD AND APPARATUS**

Request for Certificate of Correction:

Consideration has been given to your request for the issuance of a certificate of correction for the above- identified patent under the provisions of Rule 1.322/1.323.

The error complained of on the Title Page, per the examiner "Applicants request is in error. Requested corrections includes language not in the issued Patent, e.g., "on" not found between "filed Aug. 9, 1999"". In addition, requested correction would create duplication and result in incorrect information. In that an international application that would claim priority from an international application which happens to be the same application".

In view of the foregoing your request in this matter is hereby denied.

/Virginia Tolbert/
Virginia Tolbert
For Mary F. Diggs, Supervisor
Decisions and Certificate of Correction
(703) 308-8309 or (703) 308-9390 ext. 113

vt

UNITED STATES PATENT AND TRADEMARK OFFICE

Commissioner for Patents
United States Patent and Trademark Office
P.O. Box 1450
Alexandria, VA 22313-1450
www.uspto.gov

BACON & THOMAS, PLLC
625 SLATERS LANE
FOURTH FLOOR
ALEXANDRIA VA 22314

COPY MAILED

MAR 17 2008

In re Patent No. 6,777,256	:	
Issue Date: 17 August, 2004	:	
Application No. 10/391,606	:	DECISION
Filed: 20 March, 2003	:	
Attorney Docket No. LUTI3001D/REF		

This is a decision on the petition filed on 6 April, 2006, requesting issuance of duplicate Letters Patent for the above-identified patent/application under 37 C.F.R. §1.182.

The Office regrets the delay in addressing the instant matter, however, the matter was presented to the attorneys in the Office of Petitions only at this writing.

The petition is **GRANTED**.

BACKGROUND

Petitioner has made demand upon the Office to issue duplicate Letters Patent in the instant matter.

Petitioner Richard E. Fichter (Reg. No 26,382) has declared that the patent apparently was lost in the mail on transmittal from his office to that of the foreign assocciate, and has demonstrated that the petition fee has been paid.

The Publishing Division is directed to issue duplicate Letters Patent.

A copy of this decision is being forwarded to Publishing Division for issuance of duplicate Letters Patent.

The file is being released to the IFW Repository.

Patent No. 6,777,256
Application No. 10/391,606

Any questions regarding the issuance of the duplicate Letters Patent should be directed to Ms. Niomi Farmer, Office of Data Management, Office: 703-308-9250x119, Fax: 571-270-9753.

While telephone inquiries regarding this decision may be directed to the undersigned at (571) 272-3214, it is noted that all practice before the Office is in writing (see: 37 C.F.R. §1.2[1]) and the proper authority for action on any matter in this regard are the statutes (35 U.S.C.), regulations (37 C.F.R.) and the commentary on policy (MPEP). Therefore, no telephone discussion may be controlling or considered authority for Petitioner's action(s).

John J. Gillon, Jr.
Senior Attorney
Office of Petitions

cc: Ms. Niomi Farmer, ST/8C23 FAX: (571) 270-9937

---

[1] The regulations at 37 C.F.R. §1.2 provide:

§1.2 Business to be transacted in writing.

All business with the Patent and Trademark Office should be transacted in writing. The personal attendance of applicants or their attorneys or agents at the Patent and Trademark Office is unnecessary. The action of the Patent and Trademark Office will be based exclusively on the written record in the Office. No attention will be paid to any alleged oral promise, stipulation, or understanding in relation to which there is disagreement or doubt.

SPE RESPONSE FOR CERTIFICATE OF CORRECTION 10391609

DATE : 2-8-06

Paper No.: _____

TO SPE OF : ART UNIT 2872-R SHAFER

SUBJECT : Request for Certificate of Correction on Patent No.: 6890081

A response is requested with respect to the accompanying request for a certificate of correction.

Please complete this form and return with file, within 7 days to:
Palm location **7580, Certificates of Correction Branch – South Tower – 9A22**
If response is for an IFW, **return to employee (named below) via PUBSCofC Team in MADRAS.**
With respect to the change(s) requested, correcting Office and/or Applicant's errors, should the patent read as shown in the certificate of correction (COCIN)? No new matter should be introduced, nor should the scope or meaning of the claims be changed.

Thank You For Your Assistance

ROCHAUN JOHNSON
Certificates of Correction Branch
Tel. No. 703-308-9390 EXT 119

The request for issuing the above-identified correction(s) is hereby:
Note your decision on the appropriate box.

☒ **Approved** — **All** changes apply.

☐ **Approved in Part** — Specify below which changes **do not** apply.

☐ **Denied** — State the reasons for denial below.

Comments:
PLEASE NOTE THAT MPEP 1485 CLEARLY STATES THAT THE "DETERMINATION AS TO WHETHER AN ERROR HAS BEEN MADE... AND WHETHER THE ERROR IS OF SUCH A NATURE AS TO JUSTIFY THE ISSUANCE OF A CERTIFICATE OF CORRECTION WILL BE MADE BY THE CERTIFICATE OF CORRECTION BRANCH."
THE RECORD IS CLEAR THAT THE CORRECTIONS REQUESTED BY APPLICANT WAS AN OFFICE MISTAKE DUE TO THE FACT THAT THE EXAMINER APPROVED THE DRAWING CORRECTIONS FILED ON 03/20/2003 BOTH IN THE NON-FINAL OFFICE ACTION MAILED ON 3/10/2004 AND THE NOTICE OF ALLOWANCE MAILED ON 9/13/2004. THUS, THERE WAS NO NECESSITY FOR THIS MATTER TO BE REVIEWED BY THE EXAMINER. IN THE FUTURE, PLEASE [redacted] REFRAIN FROM FORWARDING SUCH INQUIRES WHICH DO NOT REQUIRE AN EXAMINER'S ATTENTION. THANKS.

R D S
~~SPE~~ 02/22/2006

2872
Art Unit

UNITED STATES PATENT AND TRADEMARK OFFICE

COMMISSIONER FOR PATENTS
UNITED STATES PATENT AND TRADEMARK OFFICE
P.O. BOX 1450
ALEXANDRIA, VA 22313-1450
WWW.USPTO.GOV

Paper No. None

Steven Thrasher
391 Sandhill Dr.
Richardson TX 75080

COPY MAILED
SEP 22 2006
OFFICE OF PETITIONS

In re Application of :
Richard Smith :
Application No. 10/391,665 : DECISION ON PETITION
Filed: March 19, 2003 : UNDER 37 C.F.R. §1.181
Attorney Docket No. 19003.00041 :
Title: METAL UNIT NESTING :
MACHINE :

This is a decision on the petition filed on August 1, 2006, pursuant to 37 C.F.R. §1.181, requesting that the holding of abandonment in the above-identified application be withdrawn.

The above-identified application became abandoned for failure to reply within the meaning of 37 C.F.R §1.113 in a timely manner to the final Office action mailed August 11, 2005, which set a shortened statutory period for reply of three months. No extensions of time under the provisions of 37 C.F.R §1.136(a) were obtained, and no responses were received. Accordingly, the above-identified application became abandoned on November 12, 2005. A notice of abandonment was mailed on June 27, 2006.

With the present petition, Petitioner has alleged that the mailing was not received. The showing required to establish nonreceipt of an Office communication must include a statement from the practitioner stating that the Office communication was not received by the practitioner and attesting to the fact that a search of the file jacket and docket records indicates that the Office communication was not received. In addition, a copy of the docket record where the non-received Office communication would have been entered had it been received and docketed must be attached to and referenced in practitioner's statement[1].

1 See MPEP 711.03(c).

Petitioner has met the requirements of Delgar v. Schuyler, 172 USPQ 513 (D.D.C. 1971), in that he has asserted that the Office communication was not received, that he has searched both the file jacket and the docket record, and he has included a copy of both of these items.

Considering the facts and circumstances of the delay at issue, as set forth on petition, it is concluded that Petitioner has met his burden of establishing that the mailing was not received.

Accordingly, the petition under 37 C.F.R. §1.181(a) is **GRANTED**. The holding of abandonment is **WITHDRAWN**.

The Technology Center will be notified of this decision. The Technology Center's support staff will re-mail the notice of August 11, 2005, and will set a new period for response.

Telephone inquiries regarding this decision should be directed to the undersigned at (571) 272-3225[2]. All other inquiries concerning examination procedures or status of the application should be directed to the Technology Center.

Paul Shanoski
Senior Attorney
Office of Petitions
United States Patent and Trademark Office

2 Petitioner will note that all practice before the Office should be in writing, and the action of the Office will be based exclusively on the written record in the Office. See 37 C.F.R. §1.2. As such, Petitioner is reminded that no telephone discussion may be controlling or considered authority for Petitioner's further action(s).

UNITED STATES PATENT AND TRADEMARK OFFICE

COMMISSIONER FOR PATENTS
UNITED STATES PATENT AND TRADEMARK OFFICE
P.O. BOX 1450
ALEXANDRIA, VA 22313-1450
www.uspto.gov

FROST BROWN TODD, LLC
2200 PNC CENTER
201 E. FIFTH STREET
CINCINNATI, OH 45202

COPY MAILED

JUL 21 2006

OFFICE OF PETITIONS

In re Application of :
Smith et al. :
Application No. 10/391,666 :
Filed: March 19, 2003 :
Attorney Docket Number: :
1116109-0016 :

This is a decision in response to the petition under 37 CFR 1.137(b), filed March 29, 2006, to revive the above-identified application.

This Petition is hereby **granted**.

The above-identified application became abandoned for failure to reply in a timely manner to the non-final Office action, mailed March 17, 2005. The Office action set a three (3) month period for reply, and provided for extensions of time under 37 CFR 1.136(a). No reply having been received, the application became abandoned on June 18, 2005. A Notice of Abandonment was mailed September 27, 2005.

Included with the petition is an Amendment in response to the Office action. Accordingly, the petition is granted.

This application is being forwarded to Technology Center Art Unit 3654 for processing of the Reply/Amendment in due course.

Telephone inquiries concerning this matter should be directed to the undersigned at (571) 272-3232.

Derek L. Woods
Attorney
Office of Petitions

UNITED STATES DEPARTMENT OF COMMERCE
Patent and Trademark Office

1/10/08

Patent No. :7088891
Inventor(s) : Sung-Tae Jung : Oh –Dal Kwon
Issued : 8/8/2006
Title : OPTICAL POWER SPLITTER
Atty.doc./File No.

Request for Certificates of Correction

Consideration has been given to your request for the issuance of a Certificate of Correction, for the above – identified patent under the provisions of CFR 1.322.

Inspection of the application for the patent reveals that col. 4, claim 1 is printed in accordance with the record. Therefore being no fault on the Patent and Trademark Office, It has no authority to issue a certificate of correction under the provision of 1.322.

In view of the forgoing, your request in this matter, is hereby denied.

Future written correspondence concerning this matter should be filed and directed to Decisions & Certificates of Correction Branch.

Henry Randall
Cecelia Newman
Decisions & Certificates
of Correction Branch
(703) 308-9390 Ext. 108

CHA & REITER, LLC
210 ROUTE 4 EAST, SUITE 103
Paramus, NJ 07652

HR/CBN

SCAN! **Please forward case and paper to address shown below.**

SPE RESPONSE FOR CERTIFICATE OF CORRECTION

Paper No.: _____

DATE : 2/26/08

TO SPE OF : ART UNIT 2874 Spe Bovernick Rodney

SUBJECT : Request for Certificate of Correction for Appl. No.: 10/391676 Patent No.: 7088891

Please respond to this request for a certificate of correction within 7 days.

Please review the requested changes/corrections as shown in the attached certificate of correction. Please complete this form (see below) and forward it with the file to:

Certificates of Correction Branch (CofC)
South Tower - 9A22
Palm Location 7580

HENRY RANDALL
Certificates of Correction Branch
703-308-9390 ext. _____

Thank You For Your Assistance

The request for issuing the above-identified correction(s) is hereby:
Note your decision on the appropriate box.

- ☑ Approved — All changes apply.
- ☐ Approved in Part — Specify below which changes do not apply.
- ☐ Denied — State the reasons for denial below.

Comments: _____

SPE

2874
Art Unit

UNITED STATES PATENT AND TRADEMARK OFFICE

Commissioner for Patents
United States Patent and Trademark Office
P.O. Box 1450
Alexandria, VA 22313-1450
www.uspto.gov

MARSHALL, GERSTEIN & BORUN LLP
233 S. WACKER DRIVE, SUITE 6300
SEARS TOWER
CHICAGO IL 60606

COPY MAILED
AUG 2 8 2006
OFFICE OF PETITIONS

In re Application of :
Scott Brown :
Application No. 10/391,676 :
Filed: March 19, 2003 :
Attorney Docket Number: 28341/00670.N

ON PETITION

This is a decision on the petition under 37 CFR 1.137(b), filed July 20, 2006, to revive the above-identified application.

This above-identified application became abandoned for failure to timely file a reply to the non-final Office Action of November 16, 2005. The non-final Office Action set a three (3) month shortened statutory period for reply. No extensions of time were obtained under the provisions of 37 CFR §1.136(a). Accordingly, this application became abandoned on February 17, 2006. A Notice of Abandonment was mailed on June 27, 2006.

This Petition is hereby **Granted**.

The office hereby acknowledges the receipt of the Amendment submitted with the instant petition.

This application is being forwarded to Technology Center 1600 for further processing.

Telephone inquiries concerning this matter should be directed to the undersigned at (571) 272-3215.

Charlema R. Grant
Petitions Attorney
Office of Petitions

SPE RESPONSE FOR CERTIFICATE OF CORRECTION

DATE : 7/21/09 Paper No.: —

TO SPE OF : ART UNIT 2173

SUBJECT : Request for Certificate of Correction for Appl. No.: 10/391680 Patent No.: 7543237 B2

Please respond to this request for a certificate of correction within 7 days.

FOR IFW FILES:

Please review the requested changes/corrections as shown in the **COCIN** document(s) in the IFW application image. No new matter should be introduced, nor should the scope or meaning of the claims be changed.

Please complete the response (see below) and forward the completed response to scanning using document code **COCX**.

FOR PAPER FILES:

Please review the requested changes/corrections as shown in the attached certificate of correction. Please complete this form (see below) and forward it with the file to:

Certificates of Correction Branch (C of C)
Randolph Square 9D62-B
Palm Location 7580

Virginia Tolbert
Certificates of Correction Branch
703-756-1591

Thank You For Your Assistance

The request for issuing the above-identified correction(s) is hereby:
Note your decision on the appropriate box.

- [x] **Approved** All changes apply.
- [ ] **Approved in Part** Specify below which changes **do not** apply.
- [ ] **Denied** State the reasons for denial below.

Comments: _____

/Kieu Vu/ 2173
SPE Art Unit

UNITED STATES PATENT AND TRADEMARK OFFICE

Commissioner for Patents
United States Patent and Trademark Office
P.O. Box 1450
Alexandria, VA 22313-1450
www.uspto.gov

Date : 2/12/08
Patent No. : 7283490 B2
Inventor : Peng
Issued : Oct. 16, 2007
Title : **METHOD FOR AUTOMATICALLY ESTABLISHING BASE STATION OPERATING AND MAINTAINING CHANNEL IN INTERNATIONAL MOBILE TELECOMMUNICATIONS 2000**
Docket No. : 2052(227053)

Re: Request for Certificate of Correction

Consideration has been given your request for the issuance of a certificate of correction for the above-identified patent under the provisions of Rules 1.322 and 1.323.

Inspection of the file of the application for the patent reveals that item 73, in the patent, is printed in accordance with the record in the Patent and Trademark Office. There being no fault on the part of the Patent and Trademark Office, it has no authority to issue a certificate of correction under the provision of 1.322.

In view of the foregoing, your request for certificate of correction is hereby **denied**.

However, further consideration will be given these matters, upon receipt of a request for certificate of correction under the provisions of 1.323, accompanied by the appropriate fee which is presently $100.

Further correspondence concerning this matter should be filed and directed to Decisions and Certificates of Correction Branch.

Elisha Evans
For Cecelia B. Newman, Supervisor
Decisions & Certificates
of Correction Branch
(703) 308-9390 ext. 110 (703) 305-8228

Kathleen Williams
Edwards Angell Palmer & Dodge LLP
P.O. Box 55874
Boston, MA 02205

CBN/eme

UNITED STATES PATENT AND TRADEMARK OFFICE

Commissioner for Patents
United States Patent and Trademark Office
P.O. Box 1450
Alexandria, VA 22313-1450

OCT 0 1 2008

Carol J. Roth
SEED INTELLECTUAL PROPERTY LAW GROUP PLLC
701 FIFTH AVENUE, SUITE 5400
SEATLLE WASHINGTON 98104

In re Application of	:
LAUENER et al	:Decision on Petition
Serial No.: 10/391,685	:
Filed : 18 MARCH 2003	:
Attorney Docket No.: 480117.404D1 :	

This letter is in response to the Petition filed on 5 June 2008 requesting clarification of the withdrawal of the restriction requirement.

BACKGROUND

This application was filed as a national application under 35 U.S.C. 111(a). As such, this application is entitled to US restriction requirement practice.

On 4 October 2006, the examiner required a restriction between Group I, a process and Group II, a product.

On 3 November 2006, applicants elected Group I, the process, with traverse. The traverse indicated that the examiner had failed to place claims 177-229 in one of the two groups.

On 4 December 2006, the examiner issued a second restriction requirement which placed Claims 177-229 into Group II.

On 4 January 2007, applicants elected Group I with traverse and elected the benzylated PDE4 inhibitor of claim 241 as the specific final product of the method of claim 139.

On 30 January 2007, the examiner issued a third restriction requirement in which the election made on 4 January 2007 was deemed to be non-responsive because applicants did not elect a single species.

On 1 March 2007, applicants elected a particular "Bzl" variable of claims 241.

On 16 April 2007, the examiner withdrew claims 141-229 from consideration. Claims 139, 140 and 230-244 were rejected under 35 USC 102(b) as being anticipated by Yamanaka et al. Claims 139, 140, 230-243 and 244 were rejected under 35 USC 112, second paragraph.

On 16 October 2007, applicants cancelled claims 236-244 and amended claims 139-140 and 230-235.

On 5 November 2007, the examiner allowed claims 139 and 230-235. The examiner made a final rejection of Claim 140 under 35 USC 102(b) and/or 35 USC 112, second paragraph.

On 5 February 2008, applicants cancelled claims 141-229 and amended claims 234.

On 17 March 2008, the examiner allowed claims 139-140 and 230-235. The examiner also stated in the Notice of Allowance that "the restriction requirement groups as set forth in the Office action mailed 1/30/07 is hereby withdrawn."

On 5 June 2008, applicants filed this petition. The issue fee was paid on 13 June 2008.

DISCUSSION

The file history and petition have been considered carefully. Although the petition has been filed under 37 CFR 1.182, which covers matters not otherwise provided for, it is being considered in this decision under 37 CFR 1.144 or 1.181 which covers withdrawal of a restriction requirement or review of an examiner's action.

Applicants expressed concern about their ability to file a divisional application directed to the non-elected product invention, given the statement made in the Notice of Allowance with regard to the withdrawal of the restriction requirement.

Where a restriction requirement is withdrawn, the provisions of 35 U.S.C. 121 are no longer applicable. In re Ziegler, 443 F.2d 1211, 1215, 170 USPQ 129, 131-32 (CCPA 1971).

The examiner has required restriction between product and process claims. MPEP 821.04(b) states in part:

> Where applicant elects claims directed to the product, and the product claims are subsequently found allowable, withdrawn process claims that depend from or otherwise require all the limitations of the allowable product claim will be considered for rejoinder. All claims directed to a nonelected process invention must require all the limitations of an allowable product claim for that process invention to be rejoined....
>
> If applicant cancels all the claims directed to a nonelected process invention **before** rejoinder occurs, the examiner should not withdraw the restriction requirement. This will preserve applicant's rights under 35 U.S.C. **121**.

In this application, however, applicant has elected the process claims. All the product claims have been cancelled. None of the product claims have been rejoined. For these reasons, the restriction requirement between Group I and II has been maintained.

DECISION

The petition filed on 5 June 2008 is **GRANTED**.

The restriction requirement made between the process of Group I (original claims 139-140 and 230-244) and the product of Group II (original claims 141-229) has been maintained.

Should there be any questions regarding this decision, please contact Special Program Examiner Julie Burke, by mail addressed to Director, Technology Center 1600, PO BOX 1450, ALEXANDRIA, VA 22313-1450, or by telephone at (571) 272-1600 or by Official Fax at 703-272-8300.

Remy Yucel
Director, Technology Center 1600

UNITED STATES PATENT AND TRADEMARK OFFICE

COMMISSIONER FOR PATENTS
UNITED STATES PATENT AND TRADEMARK OFFICE
P.O. BOX 1450
ALEXANDRIA, VA 22313-1450
www.uspto.gov

Paper No. 9

STURM & FIX LLP
206 SIXTH AVENUE
SUITE 1213
DES MOINES, IA 50309-4076

COPY MAILED

DEC 05 2003

OFFICE OF PETITIONS

In re Application of
Klinklin and Minkley
Application No. 10/391,687
Filed: March 18, 2003
Attorney Docket No. 2-1033-065
For: PROTECTIVE SLEEVING AND MANUFACTURING PROCESS FOR PRODUCING THIS TYPE OF SLEEVING

DECISION ACCORDING STATUS UNDER 37 CFR 1.47

This is in response to the petition under 37 CFR 1.47(a) filed November 20, 2003.

The petition is granted.

Petitioner has shown that the non-signing inventor has refused to join in the filing of the above-identified application after having been presented with the application papers.

The above-identified application and papers have been reviewed and found in compliance with 37 CFR 1.47(a). This application is hereby accorded Rule 1.47(a) status.

As provided in Rule 1.47(c), this Office will forward notice of this application's filing to the non-signing inventor at the address given in the petition. Notice of the filing of this application will also be published in the Official Gazette.

After this decision is mailed, the above-identified application will be returned to the Office of Initial Patent Examination for further processing.

Telephone inquiries should be directed to Petitions Attorney Steven Brantley at (703) 306-5683.

Charles Steven Brantley
Petitions Attorney
Office of Petitions

UNITED STATES PATENT AND TRADEMARK OFFICE

COMMISSIONER FOR PATENTS
UNITED STATES PATENT AND TRADEMARK OFFICE
P.O. BOX 1450
ALEXANDRIA, VA 22313-1450
www.uspto.gov

Paper No. 10

Dave Minkley
27424 Clark Circle
Chesterfield, MI 48051

COPY MAILED

DEC 05 2003

OFFICE OF PETITIONS

In re Application of :
Klinklin and Minkley :
Application No. 10/391,687 :
Filed: March 18, 2003 :
Attorney Docket No. 2-1033-065 :
For: PROTECTIVE SLEEVING AND :
MANUFACTURING PROCESS FOR :
PRODUCING THIS TYPE OF SLEEVING :

Letter

Dear Mr. Minkley:

You are named as a joint inventor in the above identified United States patent application, filed under the provisions of 35 U.S.C. 116 (United States Code), and 37 CFR 1.47(a), Rules of Practice in Patent Cases. Should a patent be granted on the application you will be designated therein as a joint inventor.

As a named inventor you are entitled to inspect any paper in the file wrapper of the application, order copies of all or any part thereof (at a prepaid cost per 37 CFR 1.19) or make your position of record in the application. Alternatively, you may arrange to do any of the preceding through a registered patent attorney or agent presenting written authorization from you. If you care to join the application, counsel of record (see below) would presumably assist you. Joining in the application would entail the filing of an appropriate oath or declaration by you pursuant to 37 CFR 1.63.

Requests for information regarding your application should be directed to the File Information Unit at (703)308-2733. Information regarding how to pay for and order a copy of the application, or a specific paper in the application, should be directed to Certification Division at (703)308-9726 or 1(800)972-6382 (outside the Washington D.C. area).

Telephone inquiries regarding this communication should be directed to Petitions Attorney Steven Brantley at (703) 306-5683.

Charles Steven Brantley
Petitions Attorney
Office of Petitions

cc: STURM & FIX LLP
206 SIXTH AVENUE
SUITE 1213
DES MOINES, IA 50309-4076

UNITED STATES PATENT AND TRADEMARK OFFICE

COMMISSIONER FOR PATENTS
UNITED STATES PATENT AND TRADEMARK OFFICE
P.O. BOX 1450
ALEXANDRIA, VA 22313-1450
www.uspto.gov

Paper No. 6

STURM & FIX LLP
206 SIXTH AVENUE
SUITE 1213
DES MOINES, IA 50309-4076

COPY MAILED

OCT 0 8 2003

OFFICE OF PETITIONS

In re Application of
Klinklin and Minkley
Application No. 10/391,687
Filed: March 18, 2003
Attorney Docket No. 2-1033-065
For: PROTECTIVE SLEEVING AND MANUFACTURING PROCESS FOR PRODUCING THIS TYPE OF SLEEVING

: DECISION REFUSING
: STATUS UNDER
: 37 CFR 1.47(a)

This is a decision on the petition under 37 CFR 1.47(a), filed August 8, 2003.

The petition is **DISMISSED**.

Any request for reconsideration of this decision must be submitted within TWO (2) MONTHS from the mail date of this decision. Extensions of time under 37 CFR 1.136(a) are permitted. Any response should be entitled "Request for Reconsideration of Petition Under 37 CFR 1.47(a)" and may include an oath or declaration executed by the inventor. **Failure to respond will result in abandonment of the application.**

A grantable petition under 37 CFR 1.47(a) requires

(1) proof that the non-signing inventor cannot be found or reached after diligent effort or that the inventor refuses to sign after having been presented with the application papers (specification, claims, and drawings),
(2) a proper oath or Declaration executed by the available joint inventor(s),
(3) the fee of $130 as specified in 37 CFR § 1.17(h), and
(4) the last known address of the omitted inventor(s).

In addition to the above requirements, the signing inventors must sign the declaration on behalf of the non-signing inventor. See MPEP 409.03(a).

The instant petition fails to satisfy (1) and (2).

As to item (1), petitioner must establish that the non-signing inventor refused to sign the oath or declaration after being presented with the application papers. Petitioner has failed to establish that the non-signing inventor was presented with a copy of the application. An inventor cannot sign a declaration stating he or she has "reviewed and understands the application papers" when the inventor has not been presented with a copy of the application and therefore has not reviewed the application. Refusal within the meaning of 37 CFR 1.47 requires that the inventor be presented with the application papers and given adequate time to review the contents of the application. Until the inventor reviews the papers and reads the specification and claims, he cannot know if he is actually an inventor of the claimed invention. Petitioner should send a copy of the application to the inventor along with instructions setting a deadline or a statement that no response will constitute a refusal. This sort of ultimatum lends support to a finding of refusal by

conduct. The proof of the pertinent events should be made by a statement of someone with *firsthand* knowledge of the events and should include documentary evidence, such as a certified mail return receipt, cover letter of instructions, telegram, etc.

As to (2), the declaration fails to list the citizenship and addresses for the non-signing inventor AND for the signing inventor.

In order to expedite consideration, petitioner may wish to submit the renewed petition under 37 CFR 1.47 by facsimile transmission to the telephone number indicated below and to the attention of the undersigned.

Further correspondence with respect to this matter should be addressed as follows:

By mail:	Mail Stop Petition Commissioner for Patents P.O. Box 1450 Alexandria, VA 22313-1450
By facsimile:	(703) 308-6916 Attn: Office of Petitions
By hand:	Office of Petitions 2201 South Clark Place Crystal Plaza 4, Suite 3C23 Arlington, VA 22202

Telephone inquiries should be directed to Petitions Attorney Steven Brantley at (703) 306-5683.

Charles Steven Brantley
Petitions Attorney
Office of Petitions

UNITED STATES PATENT AND TRADEMARK OFFICE

Commissioner for Patents
United States Patent and Trademark Office
P.O. Box 1450
Alexandria, VA 22313-1450
www.uspto.gov

VOLPE AND KOENIG, P.C.
UNITED PLAZA, SUITE 1600
30 SOUTH 17TH STREET
PHILADELPHIA PA 19103

COPY MAILED

APR 04 2007

OFFICE OF PETITIONS

In re Application of :
Valle et al :
Application No. 10/391,705 :
Filed: 03-19-2003 :
Attorney Docket No. CAM3-PT047 :

ON PETITION

This is a decision on the petition under 37 CFR 1.137(b), filed on October 23, 2006, to revive the above-identified application.

The application became abandoned for failure to file a proper and timely reply to the final Office action mailed on April 4, 2006, which set a three (3) month shortened statutory period for reply. A Notice of Abandonment was mailed on October 30, 2006.

The petition satisfies the requirements of 37 CFR 1.137(b) in that petitioners have supplied (1) the reply in the form of an RCE and a submission; (2) the petition fee; and (3) an appropriate statement of unintentional delay. Accordingly, the petition is **granted**.

This matter is being referred to Technology Center Art Unit 3682.

Telephone inquiries concerning this decision should be directed to the undersigned at (571) 272-3211.

C. T. Donnell

Christina Tartera Donnell
Senior Petitions Attorney
Office of Petitions

UNITED STATES PATENT AND TRADEMARK OFFICE

Commissioner for Patents
United States Patent and Trademark Office
P.O. Box 1450
Alexandria, VA 22313-1450
www.uspto.gov

LATHROP & GAGE LLP
4845 PEARL EAST CIRCLE
SUITE 201
BOULDER CO 80301

MAILED

JUN 29 2009

OFFICE OF PETITIONS

In re Application of	:	
Yang et al.	:	
Application No. 10/391,740	:	DECISION ON PETITION
Filed: March 19, 2003	:	
Attorney Docket No. 404282	:	

This is a decision on the petition under the unintentional provisions of 37 CFR 1.137(b), filed March 27, 2009, to revive the above-identified application.

The petition is **DISMISSED**.

Any request for reconsideration of this decision must be submitted within TWO (2) MONTHS from the mail date of this decision. Extensions of time under 37 CFR 1.136(a) are permitted. The reconsideration request should include a cover letter entitled "Renewed Petition under 37 CFR 1.137(b)." This is **not** a final agency action within the meaning of 5 U.S.C.§ 704.

The application became abandoned for failure to timely pay the issue and publication fees on or before March 31, 2009, as required by the Notice of Allowance and Fee(s) Due, mailed December 31, 2008, which set a statutory period of reply of three (3) months. Accordingly, the application became abandoned on April 1, 2009. A Notice of Abandonment was mailed May 15, 2009.

A grantable petition under 37 CFR 1.137(b) must be accompanied by: (1) the required reply, unless previously filed; (2) the petition fee as set forth in 37 CFR 1.17(m); and (3) a statement that the entire delay in filing the required reply from the due date for the reply until the filing of a grantable petition pursuant to 37 CFR 1.137(b) was unintentional. Where there is a question as to whether either the abandonment or the delay in filing a petition under 37 CFR 1.137 was unintentional, the Director may require additional information. See MPEP 711.03(c)(II)(C) and (D). The instant petition lacks item (1).

With respect to item (1) petitioner has failed to pay the total issue fee of $755.00 and the publication fee of $300.00.

Petitioner has submitted $595.00 towards the required $755.00 issue fee, thus creating a $160.00 shortage.

It is not apparent whether the person signing the instant petition was ever given a power of attorney or authorization of agent to prosecute this patent. In accordance with 37 CFR 1.34(a), the signature appearing on the petition shall constitute a representation to the

United States Patent and Trademark Office that he/she is authorized to represent the particular party in whose behalf he/she acts. A review of current USPTO records reveals that the customer number 30955 is the designated correspondence address and not the power of attorney.

Further correspondence with respect to this matter should be addressed as follows:

By Mail: Mail Stop PETITION
Commissioner for Patents
P. O. Box 1450
Alexandria, VA 22313-1450

By hand: U. S. Patent and Trademark Office
Customer Service Window, Mail Stop Petitions
Randolph Building
401 Dulany Street
Alexandria, VA 22314

By facsimile: (571) 273-8300
Attn: Office of Petitions

Telephone inquiries concerning this decision should be directed to Joan Olszewski at (571) 272-7751.

/Liana Walsh/
Liana Walsh
Petitions Examiner
Office of Petitions

UNITED STATES PATENT AND TRADEMARK OFFICE

Commissioner for Patents
United States Patent and Trademark Office
P.O. Box 1450
Alexandria, VA 22313-1450
www.uspto.gov

LATHROP & GAGE LLP
4845 PEARL EAST CIRCLE
SUITE 201
BOULDER CO 80301

COPY MAILED

SEP 16 2009

OFFICE OF PETITIONS

In re Application of	:	
Yang et al.	:	
Application No. 10/391,740	:	DECISION ON PETITION
Filed: March 19, 2003	:	
Attorney Docket No. 404282	:	

This is a decision on the renewed petition under the unintentional provisions of 37 CFR 1.137(b), filed July 21, 2009, to revive the above-identified application.

The petition is **GRANTED**.

The petition now satisfies the requirements of 37 CFR 1.137(b).

Telephone inquiries concerning this decision should be directed to the undersigned at (571) 272-7751.

This matter is being referred to the Office of Data Management for processing into a patent.

Joan Olszewski
Petitions Examiner
Office of Petitions

UNITED STATES PATENT AND TRADEMARK OFFICE

Commissioner for Patents
United States Patent and Trademark Office
P.O. Box 1450
Alexandria, VA 22313-1450
www.uspto.gov

TUCKER ELLIS & WEST LLP
1150 HUNTINGTON BUILDING
925 EUCLID AVENUE
CLEVELAND OH 44115-1414

COPY MAILED

APR 25 2008

OFFICE OF PETITIONS

In re Application of
Man M. Garg et al.
Application No. 10/391,828
Filed: March 19, 2003
Attorney Docket No.: 66329/24725

ON PETITION

This is a decision on the petition filed October 20, 2006, under 37 CFR 1.181, to withdraw the holding of abandonment for the above-identified application.

The petition under 37 CFR 1.181 is **DISMISSED**.

Any request for reconsideration of this decision must be submitted within **TWO (2) MONTHS** from the mail date of this decision. Extensions of time under 37 CFR 1.136(a) are permitted. The reconsideration request should include a cover letter entitled "Renewed Petition under 37 CFR 1.181," or, as explained in more detail below, "...under 37 CFR 1.137(a)" or (b). This is not a final agency decision.

In response to a non-Final Office Action mailed February 24, 2006, which set a three month period for reply, petitioners argue that they contacted the USPTO because the prior art cited was incorrect. No response was filed however as petitioners argue that after the Examiner faxed a revised office action on June 29, 2006, they assumed a new period of response would be set. A Notice of Abandonment was mailed September 8, 2006.

Petitioner's arguments have been considered but are not persuasive, especially in view of no response having been filed and in view of the revised office action having been faxed after the period for response. Petitioners are advised that by law a proper and timely response was required to the non-Final Office Action irrespective of incorrect prior art having been cited. The failure to file a response caused the application to become abandoned.

Applicants are not afforded an opportunity to withhold a written response to an office communication even based on their belief that the contents of the office action was erroneous or on their mis-belief that the period for reply would be restarted. Even in view of the revised office action, an extension of time and a response would have prevented the application from becoming abandoned.

In view thereof, the holding of abandonment will not be withdrawn.

ALTERNATIVE VENUES

Petitioner may wish to consider filing a renewed petition under 37 CFR 1.137(a)[1] or 37 CFR 1.137(b),[2] which now provides that where the delay in reply was unintentional, a petition may be filed to revive an abandoned application or a lapsed patent pursuant to 37 CFR 1.137(b).

The filing of a petition under the unintentional standard cannot be intentionally delayed and therefore should be filed promptly. A person seeking revival due to unintentional delay cannot make a statement that the delay was unintentional unless the entire delay, including the delay from the date it was discovered that the application was abandoned until the filing of the petition to revive under 37 CFR 1.137(b), was unintentional. A statement that the delay was unintentional is not appropriate if petitioner intentionally delayed the filing of a petition for revival under 37 CFR 1.137(b).

Further correspondence with respect to this matter should be addressed as follows:

---

[1]A grantable petition under 37 CFR 1.137(a) must be accompanied by:

(1) the required reply, unless previously filed; In a nonprovisional application abandoned for failure to prosecute, the required reply may be met by the filing of a continuing application. In a nonprovisional utility or plant application filed on or after June 8, 1995, and abandoned for failure to prosecute, the required reply may also be met by the filing of a request for continued examination in compliance with § 1.114. In an application or patent, abandoned or lapsed for failure to pay the issue fee or any portion thereof, the required reply must be the payment of the issue fee or any outstanding balance thereof.

(2) the petition fee as set forth in 37 CFR 1.17(l);

(3) a showing to the satisfaction of the Commissioner that the entire delay in filing the required reply from the due date for the reply until the filing of a grantable petition pursuant to 37 CFR 1.137(a) was unavoidable; and

(4) any terminal disclaimer (and fee as set forth in 37 CFR 1.20(d)) required pursuant to 37 CFR 1.137(c)).

[2]Effective December 1, 1997, the provisions of 37 CFR 1.137(b) now provide that where the delay in reply was unintentional, a petition may be filed to revive an abandoned application or a lapsed patent pursuant to 37 CFR 1.137(b). A grantable petition filed under the provisions of 37 CFR 1.137(b) must be accompanied by:

(1) the required reply, unless previously filed. In a nonprovisional application abandoned for failure to prosecute, the required reply may be met by the filing of a continuing application. In a nonprovisional application filed on or after June 8, 1995, and abandoned for failure to prosecute, the required reply may also be met by the filing of a request for continued examination in compliance with § 1.114. In an application or patent, abandoned or lapsed for failure to pay the issue fee or any portion thereof, the required reply must be the payment of the issue fee or any outstanding balance thereof. In an application abandoned for failure to pay the publication fee, the required reply must include payment of the publication fee.

(2) the petition fee as set forth in 37 CFR 1.17(m);

(3) a statement that the entire delay in filing the required reply from the due date for the reply until the filing of a grantable petition pursuant to 37 CFR 1.137(b) was unintentional. The Commissioner may required additional information where there is a question whether the delay was unintentional; and

(4) any terminal disclaimer (and fee as set forth in 37 CFR 1.20(d)) required pursuant to 37 CFR 1.137(c)).

By mail: Mail Stop Petition
Commissioner for Patents
P.O. Box 1450
Alexandria, VA 22313-1450

By FAX: (571) 273-8300

Telephone inquiries concerning this matter may be directed to the undersigned Petitions Attorney at (571) 272-3212.

Patricia Faison-Ball

Patricia Faison-Ball
Senior Petitions Attorney
Office of Petitions

UNITED STATES PATENT AND TRADEMARK OFFICE

Commissioner for Patents
United States Patent and Trademark Office
P.O. Box 1450
Alexandria, VA 22313-1450
www.uspto.gov

TUCKER ELLIS & WEST LLP
1150 HUNTINGTON BUILDING
925 EUCLID AVENUE
CLEVELAND OH 44115-1414

COPY MAILED

JUN 03 2008

OFFICE OF PETITIONS

In re Application of
Man M. Garg et al.
Application No. 10/391,828
Filed: March 19, 2003
Attorney Docket No.: 66329/24725

ON PETITION

This is a decision on the petition filed May 12, 2008 under 37 CFR 1.137(b),[1] to revive the above-identified application.

The petition is **GRANTED**.

This application became abandoned May 25, 2006 for failure to timely reply to the non-Final Office Action mailed February 24, 2006 and which set a three month period for reply. Accordingly, a Notice of Abandonment was mailed September 8, 2006. A petition filed October 20, 2006 under 37 CFR 1.181 was dismissed in a decision mailed April 25, 2008 because petitioner's arguments for withdrawing the holding of abandonment were not persuasive.

Comes now petitioner with the instant petition to revive using the response to the non-Final Office Action filed October 20, 2006.

This matter is being referred to Technology Center 2192 for appropriate treatment on the amendment filed October 20, 2006.

Telephone inquiries concerning this matter may be directed to the undersigned Petitions Attorney at (571) 272-3212.

Patricia Faison-Ball
Senior Petitions Attorney
Office of Petitions

---

[1] Effective December 1, 1997, the provisions of 37 CFR 1.137(b) now provide that where the delay in reply was unintentional, a petition may be filed to revive an abandoned application or a lapsed patent pursuant to 37 CFR 1.137(b). A grantable petition filed under the provisions of 37 CFR 1.137(b) must be accompanied by:

(1) the required reply, unless previously filed. In a nonprovisional application abandoned for failure to prosecute, the required reply may be met by the filing of a continuing application. In a nonprovisional application filed on or after June 8, 1995, and abandoned for failure to prosecute, the required reply may also be met by the filing of a request for continued examination in compliance with § 1.114. In an application or patent, abandoned or lapsed for failure to pay the issue fee or any portion thereof, the required reply must be the payment of the issue fee or any outstanding balance thereof. In an application abandoned for failure to pay the publication fee, the required reply must include payment of the publication fee.

(2) the petition fee as set forth in 37 CFR 1.17(m);

(3) a statement that the entire delay in filing the required reply from the due date for the reply until the filing of a grantable petition pursuant to 37 CFR 1.137(b) was unintentional. The Commissioner may required additional information where there is a question whether the delay was unintentional; and

(4) any terminal disclaimer (and fee as set forth in 37 CFR 1.20(d)) required pursuant to 37 CFR 1.137(c)).

UNITED STATES PATENT AND TRADEMARK OFFICE

Commissioner for Patents
United States Patent and Trademark Office
P.O. Box 1450
Alexandria, VA 22313-1450
www.uspto.gov

INGRASSIA FISHER & LORENZ, P.C.
7150 E. CAMELBACK SUITE 325
SCOTTSDALE, ARIZONA 85251

COPY MAILED

OCT 0 5 2005

OFFICE OF PETITIONS

In re Patent No. 6,892,472	:	
Issue Date: May 17, 2005	:	
Application No. 10/391,856	:	ON PETITION
Filed: March 18, 2003	:	
Attorney Docket No. 004.0026	:	

This is a decision on the petition filed July 6, 2005, which is being treated as a petition under 37 CFR 3.81(b)[1] to correct assignee's city and state on the front page of the above-identified patent by way of a Certificate of Correction.

The petition is **granted.**

Telephone inquiries concerning this matter may be directed to the undersigned at (571) 272-3210. Any questions concerning the issuance of the Certificate of Correction should be directed to the Certificates of Correction Branch at (703) 305-8309.

This matter is being referred to the Certificates of Correction Branch for issuance of the requested Certificate of Correction.

Irvin Dingle
Petitions Examiner
Office of Petitions

[1] See Official Gazette of June 22, 2004

UNITED STATES PATENT AND TRADEMARK OFFICE

UNITED STATES DEPARTMENT OF COMMERCE
United States Patent and Trademark Office
Address: COMMISSIONER FOR PATENTS
P.O. Box 1450
Alexandria, Virginia 22313-1450
www.uspto.gov

CAPITOL PATENT & TRADEMARK LAW FIRM, PLLC
P.O. BOX 1995
VIENNA, VA 22183

Mail Date: 05/26/2010

Applicant	: John Peter Guy	: DECISION ON REQUEST FOR
Patent Number	: 7630635	: RECALCULATION of PATENT
Issue Date	: 12/08/2009	: TERM ADJUSTMENT IN VIEW
Application No	: 10/391,863	: OF WYETH AND NOTICE OF INTENT TO
Filed	: 03/19/2003	: ISSUE CERTIFICATE OF CORRECTION
		:

The Request for Recalculation is **GRANTED** to the extent indicated.

The patent term adjustment has been determined to be **1000** days. The USPTO will *sua sponte* issue a certificate of correction reflecting the amount of PTA days determined by the recalculation.

Prior to the issuance of the certificate of correction, the USPTO will afford patentee an opportunity to be heard and request reconsideration. Accordingly, patentee has **one month or thirty (30) days**, whichever is longer, to file a request for reconsideration of this patent term adjustment calculation. See 35 U.S.C. 154(b)(3)(B)(ii) and 37 CFR 1.322(a)(4). No extensions of time will be granted under 37 CFR 1.136.

Patentee should use document code PET.OP if electronically filing a request for reconsideration of this patent term adjustment calculation. The patentee must also include the information required by 37 CFR 1.705(b)(2) and the fee required by 37 CFR 1.18(e). If patentee does not file a timely request for reconsideration of this patent term adjustment calculation including the information required by 37 CFR 1.705(b)(2) and the fee required by 37 CFR 1.18(e), the USPTO will issue a certificate of correction reflecting the PTA determination noted above.

Patentee should be aware that in order to preserve the right to review in the United States District Court for the District of Columbia of the USPTO patent term adjustment determination, patentee must ensure that he or she also take the steps required under 35 U.S.C. 154(b)(4)(A) in a timely manner. Nothing in the request for recalculation should be construed as providing an alternative time frame for commencing a civil action under 35 U.S.C. 154(b)(4)(A).

Any questions concerning this decision should be directed to the Office of Patent Legal Administration at 571-272-7702.

UNITED STATES
PATENT AND
TRADEMARK OFFICE

Commissioner for Patents
Washington, DC 20231
www.uspto.gov

3/29/04

Fleit Kain Gibbons Gutman Bongini and Bianco P L
One Boca Commerce Center
551 N W 77th Street Suite 111
Boca Raton FL 33487

Dear Applicant:

The Box PGPub replacement drawings for application number 10/391,920 received on 3/29/04 by the U. S. Patent and Trademark Office will be included for patent publication.

Telephone inquiries should be directed to Customer Service, Office of Initial Patent Examination, at 703-308-1202.

UNITED STATES
PATENT AND
TRADEMARK OFFICE

Commissioner for Patents
Washington, DC 20231
www.uspto.gov

Signature of Reviewer, Office of Initial Patent Examination

UNITED STATES PATENT AND TRADEMARK OFFICE

Commissioner for Patents
United States Patent and Trademark Office
P.O. Box 1450
Alexandria, VA 22313-1450
www.uspto.gov

KNOBBE MARTENS OLSON & BEAR LLP
2040 MAIN STREET
FOURTEENTH FLOOR
IRVINE CA 92614

COPY MAILED
NOV 01 2007
OFFICE OF PETITIONS

In re Application of	:	
Bulent M. Basol, et al.	:	
Application No. 10/391,924	:	DECISION ON PETITIONS
Filed: March 18, 2003	:	UNDER 37 CFR 1.78(a)(3)
Attorney Docket No. NVLUS.029CP2 (5291)	:	AND UNDER 37 CFR 1.78(a)(6)

This is a decision on the petition, filed June 28, 2007, which is being treated under 37 CFR §§ 1.78(a)(3) and 1.78(a)(6) to accept an unintentionally delayed claim under 35 U.S.C. §120 and 119(e) for the benefit of the prior-filed applications.

The petition is **DISMISSED**.

A petition for acceptance of a claim for late priority under 37 CFR §§ 1.78(a)(3) and 1.78(a)(6) is only applicable to those applications filed on or after November 29, 2000. Further, the petition is appropriate only after the expiration of the period specified in 37 CFR §§ 1.78(a)(2)(ii) and 1.78(a)(5)(ii). In addition, the petition under 37 CFR §§ 1.78(a)(3) and 1.78(a)(6) must be accompanied by:

(1) the reference required by 35 U.S.C. §§ 120 and 119(e) and 37 CFR §§ 1.78(a)(2)(i) and 1.78(a)(5)(i) of the prior-filed application, unless previously submitted;

(2) the surcharge set forth in § 1.17(t); and

(3) a statement that the entire delay between the date the claim was due under 37 CFR §§ 1.78(a)(2)(ii) and 1.78(a)(5)(ii) and the date the claim was filed was unintentional. The Commissioner may require additional where there is a question whether the delay was unintentional.

The petition fails to comply with item (1) above.

A reference to add the prior-filed applications on page one following the first sentence of the specification has been included in the amendments filed February 21, 2007 and June 28, 2007 respectively. However, the amendments are not acceptable as drafted since they improperly incorporate by reference the prior-filed applications. Petitioner's attention is directed to Dart Industries v. Banner, 636 F.2d 684, 207 USPQ 273 (C.A.D.C. 1980), where the court drew a distinction between a permissible 35 U.S.C. § 120 statement and the impermissible introduction of new matter by way of incorporation by reference in a 35 U.S.C. § 120 statement. The court specifically stated:

> Section 120 merely provides a mechanism whereby an application becomes entitled to benefit of the filing date of an earlier application disclosing the same subject matter. Common subject matter must be disclosed, in both applications, either specifically or by an express incorporation-by-reference of prior disclosed subject matter. Nothing in section 120 itself operates to carry forward any disclosure from an earlier application. In re deSeversky, supra at 674, 177 USPQ at 146-147. Section 120 contains no magical disclosure-augmenting powers able to pierce new matter barriers. It cannot, therefore, "limit" the absolute and express prohibition against new matter contained in section 251.
>
> In order for the incorporation by reference statement to be effective as a proper safeguard against the omission of a portion of a prior application, the incorporation by reference statement must be included in the specification-as-filed, or in an amendment specifically referred to in an oath or declaration executing the application. *See* In re deSeversky, *supra*. *Note also* MPEP 201.06(c).

If reconsideration of this decision is desired, a renewed petition under 37 CFR § 1.78(a)(3) and a Supplemental Application Data Sheet executed in accordance with 37 CFR 1.33(b) or an amendment (complying with the provisions of 37 CFR 1.121 and 37 CFR 1.76(b)(5)) to correct the above matters are required.

Further correspondence with respect to this matter should be addressed as follows:

By mail: Mail Stop PETITION
Commissioner for Patents
Post Office Box 1450
Alexandria, VA 22313-1450

By hand: U.S. Patent and Trademark Office
Customer Service Window, Mail Stop PETITION
Randolph Building
401 Dulany Street
Alexandria, VA 22314

The centralized facsimile number is **(571) 273-8300**.

Any questions concerning this matter may be directed to Sherry Brinkley at (571) 272-3204.

Sherry D. Brinkley
Petitions Examiner
Office of Petitions

Frances M. Hicks
Lead, Petitions Examiner
Office of Petitions

UNITED STATES PATENT AND TRADEMARK OFFICE

COMMISSIONER FOR PATENTS
UNITED STATES PATENT AND TRADEMARK OFFICE
P.O. BOX 1450
ALEXANDRIA, VA 22313-1450
www.uspto.gov

KNOBBE MARTENS OLSON & BEAR LLP
2040 MAIN STREET
FOURTEENTH FLOOR
IRVINE, CA 92614

COPY MAILED

JAN 24 2008

OFFICE OF PETITIONS

In re Application of
Bulent M. Basol, et al.
Application No. 10/391,924
Filed: March 18, 2003
Attorney Docket No. NVLUS.029CP2 (5291)

DECISION ON PETITIONS
UNDER 37 CFR 1.78(a)(3) AND (a)(6)

This is a decision on the renewed petition under 37 CFR §§ 1.78(a)(3) and 1.78(a)(6), filed November 8, 2007, to accept an unintentionally delayed claim under 35 U.S.C. §§120 and 119(e) for the benefit of the prior-filed applications set forth in the concurrently filed amendment.

The petition is **GRANTED.**

A petition for acceptance of a claim for late priority under 37 CFR §§ 1.78(a)(3) and 1.78(a)(6) is only applicable to those applications filed on or after November 29, 2000. Further, the petition is appropriate only after the expiration of the period specified in 37 CFR §§ 1.78(a)(2)(ii) and 1.78(a)(5)(ii). In addition, the petition under 37 CFR §§ 1.78(a)(3) and 1.78(a)(6) must be accompanied by:

(1) the reference required by 35 U.S.C. §§ 120 and 119(e) and 37 CFR §§ 1.78(a)(2)(i) and 1.78(a)(5)(i) of the prior-filed application, unless previously submitted;
(2) the surcharge set forth in § 1.17(t); and
(3) a statement that the entire delay between the date the claim was due under 37 CFR §§ 1.78(a)(2)(ii) and 1.78(a)(5)(ii) and the date the claim was filed was unintentional. The Director may require additional information where there is a question whether the delay was unintentional.

Additionally, the instant nonprovisional application must be pending at the time of filing of the reference to the prior-filed provisional application as required by 37 CFR 1.78(a)(5)(ii). Further, the nonprovisional application claiming the benefit of the prior-filed provisional application must have been filed within twelve months of the filing date of the prior-filed provisional application. All the above requirements having been satisfied, the late claim for benefit of priority under 35 U.S.C. §§ 120 and 119(e) is accepted as being unintentionally delayed.

The granting of the petition to accept the delayed benefit claim to the prior-filed applications under 37 CFR §§ 1.78(a)(3) and 1.78(a)(6) should not be construed as meaning that this application is entitled to the benefit of the filing date of the prior-filed applications. In order for this application to be entitled to the benefit of the prior-filed applications, all other requirements under 35 U.S.C. §§120 and 1.78(a)(1) and (a)(2) and under 35 U.S.C. §119(e) and 37 CFR 1.78(a)(4) and (a)(5) must be met. Similarly, the fact that the corrected Filing Receipt accompanying this decision on petition includes the prior-filed applications should not be construed as meaning that applicant is entitled to the claim for benefit of priority to the prior-filed applications noted thereon. Accordingly, the examiner will, in due course, consider this benefit claim and determine whether the application is entitled to the benefit of the earlier filing date.

A corrected Filing Receipt, which includes the priority claim to the prior-filed applications, accompanies this decision on petition.

Any questions concerning this matter may be directed to the undersigned at (571) 272-3204. All other inquiries concerning either the examination procedures or status of the application should be directed to the Technology Center.

This application is being forwarded to Technology Center Art Unit 1795 for consideration by the examiner of the claim under 35 U.S.C. § §120 and 119(e) of the prior-filed nonprovisional and provisional applications.

Sherry D. Brinkley
Petitions Examiner
Office of Petitions

ATTACHMENT : Corrected Filing Receipt

UNITED STATES PATENT AND TRADEMARK OFFICE

UNITED STATES DEPARTMENT OF COMMERCE
United States Patent and Trademark Office
Address: COMMISSIONER FOR PATENTS
P.O. Box 1450
Alexandria, Virginia 22313-1450
www.uspto.gov

APPLICATION NUMBER	FILING or 371(c) DATE	GRP ART UNIT	FIL FEE REC'D	ATTY.DOCKET.NO	TOT CLAIMS	IND CLAIMS
10/391,924	03/18/2003	1795	1626	NVLUS.029CP2 (5291)	64	4

CONFIRMATION NO. 8804

CORRECTED FILING RECEIPT

20995
KNOBBE MARTENS OLSON & BEAR LLP
2040 MAIN STREET
FOURTEENTH FLOOR
IRVINE, CA 92614

OC000000027753920

Date Mailed: 01/17/2008

Receipt is acknowledged of this non-provisional patent application. The application will be taken up for examination in due course. Applicant will be notified as to the results of the examination. Any correspondence concerning the application must include the following identification information: the U.S. APPLICATION NUMBER, FILING DATE, NAME OF APPLICANT, and TITLE OF INVENTION. Fees transmitted by check or draft are subject to collection. Please verify the accuracy of the data presented on this receipt. **If an error is noted on this Filing Receipt, please write to the Office of Initial Patent Examination's Filing Receipt Corrections. Please provide a copy of this Filing Receipt with the changes noted thereon. If you received a "Notice to File Missing Parts" for this application, please submit any corrections to this Filing Receipt with your reply to the Notice. When the USPTO processes the reply to the Notice, the USPTO will generate another Filing Receipt incorporating the requested corrections**

Applicant(s)

Bulent M. Basol, Manhattan Beach, CA;
Homayoun Talieh, San Jose, CA;

Power of Attorney: The patent practitioners associated with Customer Number 20995

Domestic Priority data as claimed by applicant

This appln claims benefit of 60/425,694 11/12/2002
and is a CIP of 10/093,185 03/05/2002 PAT 6,958,114
which is a CON of 09/877,335 06/07/2001 PAT 6,471,847
which is a DIV of 09/283,024 03/30/1999 PAT 6,251,235
This application 10/391,924
is a CIP of 10/302,213 11/22/2002
which is a CON of 09/685,934 10/11/2000 PAT 6,497,800
which claims benefit of 60/190,023 03/17/2000
This application 10/391,924
is a CIP of 10/238,665 09/09/2002 PAT 6,902,659
which is a CON of 09/607,567 06/29/2000 PAT 6,676,822
which is a DIV of 09/201,929 12/01/1998 PAT 6,176,992

Foreign Applications

If Required, Foreign Filing License Granted: 06/19/2003

The country code and number of your priority application, to be used for filing abroad under the Paris Convention, is **US 10/391,924**

Projected Publication Date: Not Applicable

Non-Publication Request: No

Early Publication Request: No
Title

Electropolishing system and process

Preliminary Class

205

PROTECTING YOUR INVENTION OUTSIDE THE UNITED STATES

Since the rights granted by a U.S. patent extend only throughout the territory of the United States and have no effect in a foreign country, an inventor who wishes patent protection in another country must apply for a patent in a specific country or in regional patent offices. Applicants may wish to consider the filing of an international application under the Patent Cooperation Treaty (PCT). An international (PCT) application generally has the same effect as a regular national patent application in each PCT-member country. The PCT process **simplifies** the filing of patent applications on the same invention in member countries, but **does not result** in a grant of "an international patent" and does not eliminate the need of applicants to file additional documents and fees in countries where patent protection is desired.

Almost every country has its own patent law, and a person desiring a patent in a particular country must make an application for patent in that country in accordance with its particular laws. Since the laws of many countries differ in various respects from the patent law of the United States, applicants are advised to seek guidance from specific foreign countries to ensure that patent rights are not lost prematurely.

Applicants also are advised that in the case of inventions made in the United States, the Director of the USPTO must issue a license before applicants can apply for a patent in a foreign country. The filing of a U.S. patent application serves as a request for a foreign filing license. The application's filing receipt contains further information and guidance as to the status of applicant's license for foreign filing.

Applicants may wish to consult the USPTO booklet, "General Information Concerning Patents" (specifically, the section entitled "Treaties and Foreign Patents") for more information on timeframes and deadlines for filing foreign patent applications. The guide is available either by contacting the USPTO Contact Center at 800-786-9199, or it can be viewed on the USPTO website at http://www.uspto.gov/web/offices/pac/doc/general/index.html.

For information on preventing theft of your intellectual property (patents, trademarks and copyrights), you may wish to consult the U.S. Government website, http://www.stopfakes.gov. Part of a Department of Commerce initiative, this website includes self-help "toolkits" giving innovators guidance on how to protect intellectual property in specific countries such as China, Korea and Mexico. For questions regarding patent enforcement issues, applicants may call the U.S. Government hotline at 1-866-999-HALT (1-866-999-4158).

LICENSE FOR FOREIGN FILING UNDER

Title 35, United States Code, Section 184

Title 37, Code of Federal Regulations, 5.11 & 5.15

GRANTED

The applicant has been granted a license under 35 U.S.C. 184, if the phrase "IF REQUIRED, FOREIGN FILING LICENSE GRANTED" followed by a date appears on this form. Such licenses are issued in all applications where the conditions for issuance of a license have been met, regardless of whether or not a license may be required as set forth in 37 CFR 5.15. The scope and limitations of this license are set forth in 37 CFR 5.15(a) unless an earlier license has been issued under 37 CFR 5.15(b). The license is subject to revocation upon written notification. The date indicated is the effective date of the license, unless an earlier license of similar scope has been granted under 37 CFR 5.13 or 5.14.

This license is to be retained by the licensee and may be used at any time on or after the effective date thereof unless it is revoked. This license is automatically transferred to any related applications(s) filed under 37 CFR 1.53(d). This license is not retroactive.

The grant of a license does not in any way lessen the responsibility of a licensee for the security of the subject matter as imposed by any Government contract or the provisions of existing laws relating to espionage and the national security or the export of technical data. Licensees should apprise themselves of current regulations especially with respect to certain countries, of other agencies, particularly the Office of Defense Trade Controls, Department of State (with respect to Arms, Munitions and Implements of War (22 CFR 121-128)); the Bureau of Industry and Security, Department of Commerce (15 CFR parts 730-774); the Office of Foreign AssetsControl, Department of Treasury (31 CFR Parts 500+) and the Department of Energy.

NOT GRANTED

No license under 35 U.S.C. 184 has been granted at this time, if the phrase "IF REQUIRED, FOREIGN FILING LICENSE GRANTED" DOES NOT appear on this form. Applicant may still petition for a license under 37 CFR 5.12, if a license is desired before the expiration of 6 months from the filing date of the application. If 6 months has lapsed from the filing date of this application and the licensee has not received any indication of a secrecy order under 35 U.S.C. 181, the licensee may foreign file the application pursuant to 37 CFR 5.15(b).

UNITED STATES PATENT AND TRADEMARK OFFICE

UNITED STATES DEPARTMENT OF COMMERCE
United States Patent and Trademark Office
Address: COMMISSIONER FOR PATENTS
P.O. Box 1450
Alexandria, Virginia 22313-1450
www.uspto.gov

KNOBBE, MARTENS, OLSON & BEAR, LLP
2040 MAIN STREET
FOURTEENTH FLOOR
IRVINE, CA 92619

Mail Date: 04/21/2010

Applicant	: Bulent M. Basol	: DECISION ON REQUEST FOR
Patent Number	: 7578923	: RECALCULATION of PATENT
Issue Date	: 08/25/2009	: TERM ADJUSTMENT IN VIEW
Appliction No	: 10/391,924	: OF WYETH AND NOTICE OF INTENT TO
Filed	: 03/18/2003	: ISSUE CERTIFICATE OF CORRECTION
		:

The Request for Recalculation is **GRANTED** to the extent indicated.

The patent term adjustment has been determined to be **83** days. The USPTO will *sua sponte* issue a certificate of correction reflecting the amount of PTA days determined by the recalculation.

Prior to the issuance of the certificate of correction, the USPTO will afford patentee an opportunity to be heard and request reconsideration. Accordingly, patentee has **one month or thirty (30) days**, whichever is longer, to file a request for reconsideration of this patent term adjustment calculation. See 35 U.S.C. 154(b)(3)(B)(ii) and 37 CFR 1.322(a)(4). No extensions of time will be granted under 37 CFR 1.136.

Patentee should use document code PET.OP if electronically filing a request for reconsideration of this patent term adjustment calculation. The patentee must also include the information required by 37 CFR 1.705(b)(2) and the fee required by 37 CFR 1.18(e). If patentee does not file a timely request for reconsideration of this patent term adjustment calculation including the information required by 37 CFR 1.705(b)(2) and the fee required by 37 CFR 1.18(e), the USPTO will issue a certificate of correction reflecting the PTA determination noted above.

Patentee should be aware that in order to preserve the right to review in the United States District Court for the District of Columbia of the USPTO patent term adjustment determination, patentee must ensure that he or she also take the steps required under 35 U.S.C. 154(b)(4)(A) in a timely manner. Nothing in the request for recalculation should be construed as providing an alternative time frame for commencing a civil action under 35 U.S.C. 154(b)(4)(A).

Any questions concerning this decision should be directed to the Office of Patent Legal Administration at 571-272-7702.

UNITED STATES PATENT AND TRADEMARK OFFICE

COMMISSIONER FOR PATENTS
UNITED STATES PATENT AND TRADEMARK OFFICE
P.O. BOX 1450
ALEXANDRIA, VA 22313-1450
www.uspto.gov

Paper No. 10

MINTZ, LEVIN, COHN, FERRIS, GLOVSKY
AND POPEO, P.C.
ONE FINANCIAL CENTER
BOSTON, MA 02111

COPY MAILED

FEB 1 0 2004

OFFICE OF PETITIONS

In re Application of
Lepley et al.
Application No.10/391,939
Filed: March 19, 2003
Attorney Docket No. 21402-048 (Cura-348)
Title of Invention: THERAPEUTIC POLYPEPTIDES, NUCLEIC ACIDS ENCODING SAME, AND METHODS OF USE

DECISION REFUSING STATUS
UNDER 37 CFR 1.47(a)

This is in response to the petition filed September 3, 2003 under 37 CFR. §1.47(a).

The petition under 37 CFR. §1.47(a) is **DISMISSED**.

Rule 47 applicant is given TWO MONTHS from the mailing date of this decision to reply, correcting the below-noted deficiencies. Any reply should be entitled "Request for Reconsideration of Petition Under 37 CFR. §1.47(a)," and should only address the deficiencies noted below, except that the reply may include an oath or declaration executed by the non-signing inventor. **Failure to respond will result in abandonment of the application**. Any extensions of time will be governed by 37 CFR. §1.136(a).

The above-identified application was filed on September 19, 2003, with a partially executed oath or declaration. Accordingly, on June 2, 2003, applicant was mailed a "Notice to File Missing Parts of Nonprovisional Application - Filing Date Granted," requiring for the purposes of this decision, an executed oath or declaration in compliance with §1.63, and a surcharge for its late filing. This Notice set an extendable two-month period for reply of August 2, 2002.

In reply, applicant filed a petition, and the surcharge for late filing of the declaration. To make timely a one (1) month extension of time and fee were submitted. However, a two month extension of time is required. The purchase of the one month extension of time provided applicant with a reply date of September 2, 2003. Although applicant indicates the reply to the Notice of Missing Parts (petition) was submitted via Express Mail Label No. : EV328187799US. A review of the US Postal Service (USPS) data base shows EV328187799US was not accepted by the USPS until September 3, 2003. The package was delivered on September 4, 2003. Thus the earliest filing date that can be obtained is September 3, 2003. As such deposit account 50-0311 will be charged $210.00 (2 month) extension of time fee. The same deposit account will be refunded $130.00 because there was a duplicate petition fee charge.

A grantable petition under 37 CFR. §1.47(a) requires: (1) proof that the non-signing inventor cannot be reached or refuses to sign the oath or declaration after having been presented with the application papers (specification, claims and drawings); (2) an acceptable oath or declaration in compliance with 35 U.S.C. §§115 and 116; (3) the petition fee; and (4) a statement of the last known address of the non-signing inventor.

The instant petition does not satisfy requirements (4).

As to item (4), the last known address provided on the declaration for non-signing inventor Lepley differs from the address provided in the petition. Furthermore the address where the application papers was mailed and received was the Hartford, Connecticut address. It is not clear at which address non-signing inventor Lepley can be reached. If Lepley can be reached at both addresses a statement to that effect should be provided. If Lepley no longer receives correspondence at the Branford, Connecticut address, the address on the declaration must be corrected via a supplemental declaration or an application data sheet. See 37 CFR 1.67 and 37 CFR 1.76.

Petitioner has met all requirements for non-signing inventor Luca Rastelli.

It is also noted that a Notice to Comply with the Requirements for Patent Applications Containing Nucleotide Sequence and/or Amino Acid Sequence Disclosures was mailed on September 17, 2003 with an extendable reply period of November 17, 2003. A review of the record shows a response to the Notice to Comply has not been submitted.

Further correspondence with respect to this matter should be addressed as follows:

By mail:	Mail Stop Petition Commissioner for Patents P.O. Box 1450 Alexandria, VA 22313-1450
By facsimile:	(703) 872-9306
By delivery service: (FedEx, UPS, DHL, etc.)	U.S. Patent and Trademark Office 2011 South Clark Place Customer Window, Mail Stop Petition Crystal Plaza Two, Lobby, Room 1B03 Arlington, VA 22202

Telephone inquiries related to this decision may be directed to the undersigned at (703) 306-0251.

Charlema R. Grant

Charlema R. Grant
Petitions Attorney
Office of Petitions

UNITED STATES PATENT AND TRADEMARK OFFICE

Commissioner for Patents
United States Patent and Trademark Office
P.O. Box 1450
Alexandria, VA 22313-1450
www.uspto.gov

Paper No. 13

MINTZ, LEVIN, COHN, FERRIS, GLOVSKY
AND POPEO, P.C.
ONE FINANCIAL CENTER
BOSTON MA 02111

COPY MAILED

JUN 0 8 2004

OFFICE OF PETITIONS

In re Application of
Lepley, Rieger, Tse, Rastelli, Smithson, Mesri, Ooi, Anderson, Guo, Giot and Starling
Application No. 10/391,939
Filed: March 19, 2003
Attorney Docket Number: 21402-048(cura-348)
Title of Invention: Therapeutic Polypeptides, Nucleic Acids Encoding Same, and Methods of Use

DECISION GRANTING STATUS
UNDER 37 CFR 1.47(a)

This is in response to the renewed petition under 37 CFR 1.47(a), filed March 19, 2004.

The petition is GRANTED.

Petitioner has shown the non-signing inventors Denise Lepley and Luca Rastelli have refused to join in the filing of the above-identified application after having been presented with the application papers. The petition attest a copy of the application papers was sent to non-signing inventors' last known address. The non-signing inventors' failure to respond to the application mailing sufficiently establishes that they refuse to execute the application papers.

The above-identified application and papers have been reviewed and found in compliance with 37 CFR 1.47(a). This application is hereby accorded Rule 1.47(a) status.

As provided in Rule 1.47(c), this Office will forward notice of this application's filing to

the non-signing inventor at the address given in the petition. Notice of the filing of this application will also be published in the Official Gazette.

This application is being forwarded to the Office of Initial Patent Examination for further processing.

Telephone inquiries related to this decision may be directed to the undersigned at (703) 306-0251.

Charlema R. Grant

Charlema R. Grant
Petitions Attorney
Office of Petitions

UNITED STATES PATENT AND TRADEMARK OFFICE

Commissioner for Patents
United States Patent and Trademark Office
P.O. Box 1450
Alexandria, VA 22313-1450
www.uspto.gov

Denise Lepley
51 Church Street
Branford, CT 06405

In re Application of
Lepley, Rieger, Tse, Rastelli, Smithson, Mesri, Ooi, Anderson, Guo, Giot and Starling
Application No. 10/391,939
Filed: March 19, 2003
Attorney Docket Number: 21402-048(cura-348)
Title of Invention: Therapeutic Polypeptides, Nucleic Acids Encoding Same, and Methods of Use

: LETTER

COPY MAILED
JUN 0 8 2004
OFFICE OF PETITIONS

Dear Ms. Lepley:

You are named as a joint inventor in the above-identified United States patent application filed under the provisions of 35 U.S.C. 116 (United States Code) and 37 C.F.R. § 1.47(a), Rules of Practice in Patent Cases. Should a patent be granted on the application you will be designated therein as a joint inventor.

As a named inventor you are entitled to inspect any paper in the file wrapper of the application, order copies of all or any part thereof (at a prepaid cost as per 37 C.F.R. § 1.19) or make your position of record in the application. Alternatively, you may arrange to do any of the preceding through a registered patent attorney or agent presenting written authorization from you. If you care to join the application, applicant (see below) would presumably assist you. Joining in the application would entail the filing of an appropriate oath or declaration by you pursuant to 37 C.F.R. § 1.63.

Telephone inquiries regarding this communication should be directed to Petitions Attorney Charlema R. Grant at (703) 306-0251. Requests for information regarding your application should be directed to the File Information Unit at (703) 308-2733. Information regarding how to pay for and order a copy of the application, or a specific paper in the application, should be directed to Certification Division at (703) 308-9726 or 1-800-972-6382 (outside the Washington D.C. area).

Charlema R. Grant
Petitions Attorney
Office of Petitions

Ivor Elrifi
MINTZ, LEVIN, COHN, FERRIS, GLOVSKY AND POPEO, P.C.
ONE FINANCIAL CENTER
BOSTON MA 02111

UNITED STATES PATENT AND TRADEMARK OFFICE

Commissioner for Patents
United States Patent and Trademark Office
P.O. Box 1450
Alexandria, VA 22313-1450
www.uspto.gov

Luca Rastelli
52 Pepperbush Lane
Guilford, CT 06437

In re Application of
Lepley, Rieger, Tse, Rastelli, Smithson, Mesri, Ooi, Anderson, Guo, Giot and Starling
Application No. 10/391,939
Filed: March 19, 2003
Attorney Docket Number: 21402-048(cura-348)
Title of Invention: Therapeutic Polypeptides, Nucleic Acids Encoding Same, and Methods of Use

: LETTER

COPY MAILED
JUN 0 8 2004
OFFICE OF PETITIONS

Dear Mr. Rastelli:

You are named as a joint inventor in the above-identified United States patent application filed under the provisions of 35 U.S.C. 116 (United States Code) and 37 C.F.R. § 1.47(a), Rules of Practice in Patent Cases. Should a patent be granted on the application you will be designated therein as a joint inventor.

As a named inventor you are entitled to inspect any paper in the file wrapper of the application, order copies of all or any part thereof (at a prepaid cost as per 37 C.F.R. § 1.19) or make your position of record in the application. Alternatively, you may arrange to do any of the preceding through a registered patent attorney or agent presenting written authorization from you. If you care to join the application, applicant (see below) would presumably assist you. Joining in the application would entail the filing of an appropriate oath or declaration by you pursuant to 37 C.F.R. § 1.63.

Telephone inquiries regarding this communication should be directed to Petitions Attorney Charlema R. Grant at (703) 306-0251. Requests for information regarding your application should be directed to the File Information Unit at (703) 308-2733. Information regarding how to pay for and order a copy of the application, or a specific paper in the application, should be directed to Certification Division at (703) 308-9726 or 1-800-972-6382 (outside the Washington D.C. area).

Charlema R. Grant

Charlema R. Grant
Petitions Attorney
Office of Petitions

Ivor Elrifi
MINTZ, LEVIN, COHN, FERRIS, GLOVSKY
AND POPEO, P.C.
ONE FINANCIAL CENTER
BOSTON MA 02111

UNITED STATES PATENT AND TRADEMARK OFFICE

Commissioner for Patents
United States Patent and Trademark Office
P.O. Box 1450
Alexandria, VA 22313-1450
www.uspto.gov

JENELL LAWSON
INTELLECTUAL PROPERTY
CURAGEN CORPORATION
555 LONG WHARF DRIVE
NEW HAVEN, CT 06551

COPY MAILED

JUL 12 2007

OFFICE OF PETITIONS

In re Application of	:	
Anderson et al.	:	
Application No. 10/391,939	:	ON PETITION
Filed: March 19, 2003	:	
Attorney Docket No. 21402-048 (Cura 348)	:	

This is a decision on the petition under 37 C.F.R. § 1.137(b), filed June 5, 2007, to revive the above-identified application.

The petition is **GRANTED.**

The petition satisfies the conditions for revival pursuant to the provisions of 37 CFR 1.137(b) in that (1) the reply in the form of a continuing application; (2) the petition fee; and (3) the required statement of unintentional delay have been received. Accordingly, the response has been accepted as having been unintentionally delayed.

While a courtesy copy of this decision is being mailed to the person signing the instant petition, all future correspondence will be directed solely to the address currently of record until such time as proper and appropriate instructions are received to the contrary.

The above-identified application is being revived solely for purposes of continuity. As continuity has been established by this decision reviving the above-identified application, the above-identified application is again abandoned in favor of continuing application No. 11/810,705.

Telephone inquiries regarding this decision should be directed to the undersigned at (571) 272-3206.

Liana Walsh
Petitions Examiner
Office of Petitions

Cc:

MINTZ, LEVIN, COHN, FERRIS, GLOVSKY & POPEO, P.C.
ONE FINANCIAL CENTER
BOSTON, MA 02111

UNITED STATES PATENT AND TRADEMARK OFFICE

Commissioner for Patents
United States Patent and Trademark Office
P.O. Box 1450
Alexandria, VA 22313-1450
www.uspto.gov

CLARK HILL, PLC
SUITE 3500
500 WOODWARD AVENUE
DETROIT, MI 48226-3435

COPY MAILED

SEP 13 2007

OFFICE OF PETITIONS

In re Application of
Matthew M. Bednarski
Application No. 10/391,974
Filed: March 18, 2003
Attorney Docket No. 19365-092015

DECISION ON PETITION

This is a decision on the petition under 37 CFR 1.137(b), filed August 20, 2007, to revive the above-identified application.

The petition is **GRANTED**.

This application became abandoned for failure to timely pay the issue and publication fees on or before July 2, 2007, as required by the Notice of Allowance and Fee(s) Due, mailed April 2, 2007. Accordingly, the date of abandonment of this application is July 3, 2007.

The petition satisfies the requirements of 37 CFR 1.137(b) in that petitioner has supplied (1) the reply in the form of payment of the issue fee of $1,400.00 and the publication fee of $300, (2) the petition fee of $1,500, and (3) a proper statement of unintentional delay. Accordingly, the issue and publication fees are accepted as being unintentionally delayed.

Telephone inquiries concerning this decision should be directed to Kimberly Inabinet at (571) 272-4618.

This application is being referred to Publishing Division for appropriate processing in accordance with this decision on petition.

Frances Hicks
Petitions Examiner
Office of Petitions

UNITED STATES PATENT AND TRADEMARK OFFICE

Commissioner for Patents
United States Patent and Trademark Office
P.O. Box 1450
Alexandria, VA 22313-1450
www.uspto.gov

MITSUBISHI ELECTRIC RESEARCH LABORATORIES, INC.
201 BROADWAY
CAMBRIDGE MA 02139

COPY MAILED

SEP 21 2005

OFFICE OF PETITIONS

In re Application of :
Ramesh Raskar et al. :
Application No. 10/392,000 :
Filed: March 19, 2003 :
Attorney Docket No. CR-1437 :

ON PETITION

This is a decision on the petition filed September 9, 2005 under 37 CFR 1.137(b),[1] to revive the above-identified application.

The petition under 37 CFR 1.137 (b) is **GRANTED**.

This application became abandoned March 18, 2005 for failure to timely pay the issue fee on or before March 17, 2005. Accordingly, a Notice of Abandonment was mailed April 28, 2005.

The issue fee, petition fee and publication fee, in accordance with 37 CFR 1.18, have been charged to deposit account no. 50-0749. All other requirements of 37 CFR 1.137(b) having now been met, this application file is being forwarded to the Publishing Division to be processed into a patent.

Telephone inquiries concerning this matter may be directed to the undersigned Petitions Attorney at (571) 272-3212.

Patricia Faison-Ball

Patricia Faison-Ball
Senior Petitions Attorney
Office of Petitions

---

[1] Effective December 1, 1997, the provisions of 37 CFR 1.137(b) now provide that where the delay in reply was unintentional, a petition may be filed to revive an abandoned application or a lapsed patent pursuant to 37 CFR 1.137(b). A grantable petition filed under the provisions of 37 CFR 1.137(b) must be accompanied by:

(1) the required reply, unless previously filed. In a nonprovisional application abandoned for failure to prosecute, the required reply may be met by the filing of a continuing application. In a nonprovisional application filed on or after June 8, 1995, and abandoned for failure to prosecute, the required reply may also be met by the filing of a request for continued examination in compliance with § 1.114. In an application or patent, abandoned or lapsed for failure to pay the issue fee or any portion thereof, the required reply must be the payment of the issue fee or any outstanding balance thereof.

(2) the petition fee as set forth in 37 CFR 1.17(m);

(3) a statement that the entire delay in filing the required reply from the due date for the reply until the filing of a grantable petition pursuant to 37 CFR 1.137(b) was unintentional. The Commissioner may required additional information where there is a question whether the delay was unintentional; and

(4) any terminal disclaimer (and fee as set forth in 37 CFR 1.20(d)) required pursuant to 37 CFR 1.137(c)).

UNITED STATES PATENT AND TRADEMARK OFFICE

Commissioner for Patents
United States Patent and Trademark Office
P.O. Box 1450
Alexandria, VA 22313-1450
www.uspto.gov

COPY MAILED
MAY 0 1 2006
OFFICE OF PETITIONS

MITSUBISHI ELECTRIC RESEARCH LABORATORIES, INC.
201 BROADWAY
CAMBRIDGE MA 02139

In re Application of	:	
Ramesh Raskar et al.	:	
Application No. 10/392,000	:	ON PETITION
Filed: March 19, 2003	:	
Attorney Docket No.: CR-1437	:	

This is a decision on the petition filed March 10, 2006, under 37 CFR 1.181, to withdraw the holding of abandonment for the above-identified application.

The petition under 37 CFR 1.181 is **GRANTED**.

The application was held abandoned on March 18, 2005, for failure to timely submit corrected drawings in response to the Notice of Allowability mailed December 17, 2004, which set a three month period for reply. Accordingly, a Notice of Abandonment was mailed February 21, 2006.

Petitioner asserts that a response was filed and, in support, petitioner has submitted, *inter alia*, a copy of the drawings filed October 12, 2004 in response to a non-Final Office Action mailed September 22, 2004 and approved by the Examiner responsible for this application on December 9, 2004. Additionally, petitioner has submitted a copy of the postcard receipt date stamped October 12, 2004 to show proof of filing.

A search of the application file and the USPTO records reveals that in fact, the drawings were filed on October 12, 2004 and approved by the Examiner on December 9, 2004, prior to the mailing of the Notice of Allowability. Accordingly, the Notice of Allowability mailed December 17, 2004 requiring Corrected Drawings and the Notice of Abandonment mailed February 21, 2006 were both mailed in error. The Examiner has indicated that form PTOL-37 incorrectly checked the box for corrected drawings. Additionally, in view thereof, there is no need for form PTO-948.The Notice of Abandonment is hereby withdrawn. No petition fee is due and none has been charged.

This matter will be referred to the Publishing Division to be processed into a Patent.

Telephone inquiries concerning this matter may be directed to the undersigned Petitions Attorney at (571) 272-3212.

Patricia Faison-Ball

Patricia Faison-Ball
Senior Petitions Attorney
Office of Petitions

UNITED STATES PATENT AND TRADEMARK OFFICE

COMMISSIONER FOR PATENTS
UNITED STATES PATENT AND TRADEMARK OFFICE
P.O. BOX 1450
ALEXANDRIA, VA 22313-1450
www.uspto.gov

Patent Department
Mitsubishi Electric Research Laboratories, Inc.
201 Broadway
Cambridge, MA 02139

COPY MAILED

JAN 08 2007

OFFICE OF PETITIONS

In re Application of	:
Raskar, et al.	: DECISION ON PETITION
Application No. 10/392,026	:
Filed: March 19, 2003	:
Docket No.: CR-1439	:

The above-identified application has been directed to the Office of Petitions in reference to the petition to withdraw the holding of abandonment under 37 CFR 1.181 filed April 2, 2004.

The petition is **GRANTED**.

The application was held abandoned for failure to timely submit a proper reply to the Office communication mailed June 4, 2003. The Office communication set a two month shortened statutory period of time for reply. Notice of Abandonment was mailed February 18, 2004.

Petitioners assert non-receipt of the Office communication mailed June 4, 2003.

In the absence of any irregularity in the mailing of the Office communication, there is a strong presumption that the Office communication was properly mailed to practitioner at the address of record. This presumption may be overcome by a showing that the Office communication was not in fact received. The showing required to establish non-receipt of an Office communication must include a statement from the practitioner stating that the Office communication was not received by the practitioner and attesting to the fact that a search of the file jacket and docket records indicates that the Office communication was not received. A copy of the docket record where the non-received Office communication would have been entered had it been received and docketed must be attached to and referenced in practitioner's statement. *See*, MPEP 711.03(c). The showing outlined above may not be sufficient if there are circumstances that point to a conclusion that the Office communication may have been lost after receipt rather than a conclusion that the Office communication was lost in the mail.

Petitioners' arguments and supporting documentation have been carefully considered and support petitioners' conclusion that the Office communication of June 4, 2003 was not received.

In view thereof, the Notice of Abandonment mailed February 18, 2004 is hereby **VACATED** and the holding of abandonment is **WITHDRAWN**.

This application is being forwarded to the Office of Initial Patent Examination for further processing.

Telephone inquiries regarding this decision should be directed to the undersigned at (571) 272-3205.

Alesia M. Brown
Petitions Attorney
Office of Petitions